IMPORTANT

WARNING/CAUTION/NOTE

Please read this manual and follow its instructions carefully. To emphasize special information, the words **⚠ WARNING**, ⚠ **CAUTION** and **NOTE** have special meanings. Pay special attention to the messages highlighted by these signal words.

⚠ WARNING

Indicates a potential hazard that could result in death or injury.

⚠ **CAUTION**

Indicates a potential hazard that could result in vehicle damage.

NOTE:

Indicates special information to make maintenance easier or instructions clearer.

⚠ WARNING

This service manual is intended for authorized Suzuki dealers and qualified service technicians only. Inexperienced technicians or technicians without the proper tools and equipment may not be able to properly perform the services described in this manual.
Improper repair may result in injury to the technician and may render the vehicle unsafe for the driver and passengers.

⚠ WARNING

For vehicles equipped with a Supplemental Restraint (Air Bag) System:

- **Service on and around the air bag system components or wiring must be performed only by an authorized SUZUKI dealer. Refer to "Air Bag System Components and Wiring Location View" under "General Description" in air bag system section in order to confirm whether you are performing service on or near the air bag system components or wiring. Please observe all WARNINGS and "Service Precautions" under "On-Vehicle Service" in air bag system section before performing service on or around the air bag system components or wiring. Failure to follow WARNINGS could result in unintentional activation of the system or could render the system inoperative. Either of these two conditions may result in severe injury.**
- **If the air bag system and another vehicle system both need repair, Suzuki recommends that the air bag system be repaired first, to help avoid unintended air bag system activation.**
- **Do not modify the steering wheel, instrument panel or any other air bag system component on or around air bag system components or wiring. Modifications can adversely affect air bag system performance and lead to injury.**
- **If the vehicle will be exposed to temperatures over 93 °C (200 °F), for example, during a paint baking process, remove the air bag system components, that is air bag (inflator) modules, SDM and/or seat belt with pretensioner, beforehand to avoid component damage or unintended activation.**

The circle with a slash in this manual means "Don't do this" or "Don't let this happen".

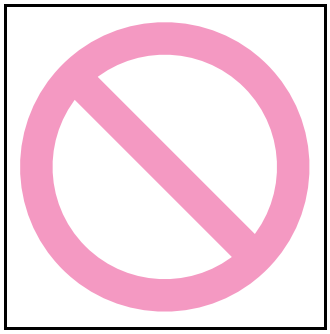

FOREWORD

This manual (Volumes 1 and 2) contains procedures for diagnosis, maintenance, adjustments, minor service operations, replacement of components (Service) and for disassembly and assembly of major components (Unit Repair-Overhaul).

VOLUME 1 contains General information, Engine, Suspension, Drive/Axle and Brakes sections (Sections 0 – 5).
VOLUME 2 contains Transmission/Transaxle, Steering, HVAC, Restraint, Body/Cab/Accessories and Control Systems sections (Sections 6 – 10).

Applicable Model:
SX4 (RW415/RW416) produced at KOSAI plant in Japan with following vehicle identification number (VIN)

RW415 (Hatchback)

ⓧJSAGYA11S########ⓧ	~
ⓧJSAGYB11S########ⓧ	~

RW416 (Hatchback)

ⓧJSAGYA21S########ⓧ	~
JS2YA21S#########	~

RW416 (Sedan)

ⓧJSAGYC21S########ⓧ	~
JS2YC21S#########	~

The contents are classified into sections each of which is given a section number as indicated in the Table of Contents on following page. And on the first page of each individual section is an index of that section.
This manual should be kept in a handy place for ready reference of the service work.
Strict observance of the so specified items will enable one to obtain the full performance of the vehicle.

When replacing parts or servicing by disassembling, it is recommended to use SUZUKI genuine parts, tools and service materials as specified in each description.

All information, illustrations and specifications contained in this literature are based on the latest product information available at the time of publication approval. And used as the main subject of description is the vehicle of standard specifications among others.
Therefore, note that illustrations may differ from the vehicle being actually serviced.
The right is reserved to make changes at any time without notice.

SUZUKI MOTOR CORPORATION

© 2007 **SUZUKI MOTOR CORPORATION** All rights reserved.
No part of this document may be reproduced or transmitted in any form or by any means, electronic or mechanical, for any purpose, without the express written permission of Suzuki Motor Corporation.

RECOMMENDATION OF GENUINE SUZUKI PARTS AND ACCESSORIES USE

SUZUKI strongly recommends the use of genuine SUZUKI parts* and accessories. Genuine SUZUKI parts and accessories are built to the highest standards of quality and performance, and are designed to fit the vehicle's exact specifications.

A wide variety of non-genuine replacement parts and accessories for SUZUKI vehicles are currently available in the market. Using these parts and accessories can affect the vehicle performance and shorten its useful life. Therefore, installation of non-genuine SUZUKI parts and accessories is not covered under warranty.

Non-Genuine SUZUKI Parts and Accessories
Some parts and accessories may be approved by certain authorities in your country.
Some parts and accessories are sold as SUZUKI authorized replacement parts and accessories. Some genuine SUZUKI parts and accessories are sold as re-use parts and accessories. These parts and accessories are non-genuine Suzuki parts and accessories and use of these parts are not covered under warranty.

Re-use of Genuine SUZUKI Parts and Accessories
The resale or re-use of the following items which could give rise to safety hazards for users is expressly forbidden:

1) Airbag components and all other pyrotechnic items, including their components (e.g. cushion, control devices and sensors)
2) Seatbelt system, including their components (e.g. webbing, buckles, and retractors)

The air bag and seat belt pretensioner components contain explosive chemicals. These components should be removed and disposed of properly by SUZUKI authorized service shop or scrap yard to avoid unintended explosion before scrapping.

*The parts remanufactured under SUZUKI's approval can be used as genuine SUZUKI parts in Europe.

TABLE OF CONTENTS

Volume 1

Precautions 00-i
Precautions 00-1

General Information 0-i
General Information 0A-1
Maintenance and Lubrication 0B-1

Engine 1-i
Precautions 1-1
Engine General Information and Diagnosis 1A-1
Aux. Emission Control Devices 1B-1
Engine Electrical Devices 1C-1
Engine Mechanical 1D-1
Engine Lubrication System 1E-1
Engine Cooling System 1F-1
Fuel System 1G-1
Ignition System 1H-1
Starting System 1I-1
Charging System 1J-1
Exhaust System 1K-1

Suspension 2-i
Precautions 2-1
Suspension General Diagnosis 2A-1
Front Suspension 2B-1
Rear Suspension 2C-1
Wheels and Tires 2D-1

Driveline / Axle 3-i
Precautions 3-1
Drive Shaft / Axle 3A-1
Differential 3B-1
Transfer 3C-1
Propeller Shaft 3D-1

Brakes 4-i
Precautions 4-1
Brake Control System and Diagnosis 4A-1
Front Brakes 4B-1
Rear Brakes 4C-1
Parking Brake 4D-1
ABS 4E-1
Electronic Stability Program 4F-1

Transmission / Transaxle 5-i
Precautions 5-1
Automatic Transmission/Transaxle 5A-1
Manual Transmission/Transaxle 5B-1
Clutch 5C-1

Volume 2

Precautions 00-i
Precautions 00-1

Steering 6-i
Precautions 6-1
Steering General Diagnosis 6A-1
Steering Wheel and Column 6B-1
Power Assisted Steering System 6C-1

HVAC 7-i
Precautions 7-1
Heater and Ventilation 7A-1
Air Conditioning System 7B-1

Restraint 8-i
Precautions 8-1
Seat Belts 8A-1
Air Bag System 8B-1

Body, Cab and Accessories 9-i
Precautions 9-1
Wiring Systems 9A-1
Lighting Systems 9B-1
Instrumentation / Driver Info. / Horn 9C-1
Wipers / Washers 9D-1
Glass / Windows / Mirrors 9E-1
Security and Locks 9F-1
Seats 9G-1
Interior Trim 9H-1
Hood / Fenders / Doors 9J-1
Body Structure 9K-1
Paint / Coatings 9L-1
Exterior Trim 9M-1

Control Systems 10-i
Precautions 10-1
Body Electrical Control System 10B-1
Immobilizer Control System 10C-1
Keyless Start System 10E-1

Section 00

Precautions

CONTENTS

Precautions 00-1
Precautions 00-1
Precautions for Vehicles Equipped with a Supplemental Restraint (Air Bag) System 00-1
General Precautions 00-4
Warning for Wheel (with tire) Removal 00-6
Precautions in Servicing 4WD Model 00-7
Precautions for Catalytic Converter 00-7
Precautions for Installing Mobile Communication Equipment 00-8
Precaution for CAN Communication System 00-8
Precautions for Electrical Circuit Service 00-8
Air Bag Warning 00-10
Air Bag System Service Warning 00-10
Fastener Caution 00-11
Suspension Caution 00-11
Wheels and Tires Caution 00-11
ABS Caution 00-11
Precaution for Vehicle Equipped with ESP® System 00-11
Brake Caution 00-11
Repair Instructions 00-12
Electrical Circuit Inspection Procedure 00-12
Intermittent and Poor Connection Inspection 00-14

Precautions

Precautions

Precautions for Vehicles Equipped with a Supplemental Restraint (Air Bag) System

S7RW0A0000001

⚠ WARNING

- **The configuration of air bag system parts are as shown in the figure. When it is necessary to service (remove, reinstall and inspect) these parts, be sure to follow procedures described in Air Bag System section. Failure to follow proper procedures could result in possible air bag system activation, personal injury, damage to parts or air bag system being unable to activate when necessary.**
- **If the air bag system and another vehicle system both need repair, SUZUKI recommends that the air bag system be repaired first, to help avoid unintended air bag system activation.**
- **Do not modify the steering wheel, dashboard, or any other air bag system components. Modifications can adversely affect air bag system performance and lead to injury.**
- **If the vehicle will be exposed to temperatures over 93 °C (200 °F) (for example, during a paint baking process), remove the air bag system components beforehand to avoid component damage or unintended air bag system activation.**

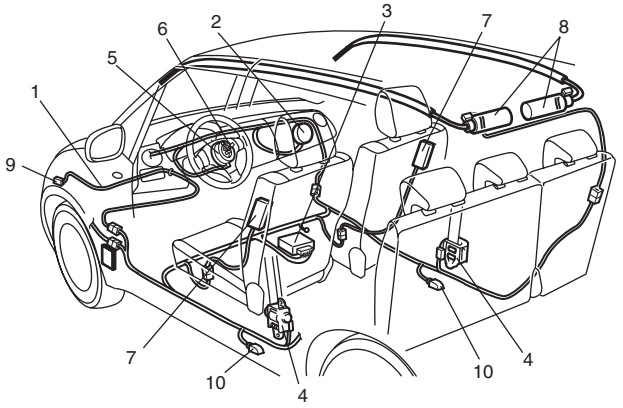

I5RW0A000001-01

1. Air bag wire harness (in floor, main and instrument panel harness)	6. Driver air bag (inflator) module
2. Passenger air bag (inflator) module	7. Side air bag (inflator) module (if equipped)
3. SDM	8. Curtain air bag (inflator) module (if equipped)
4. Seat belt pretensioner	9. Forward sensor
5. Contact coil	10. Side sensor (if equipped)

Diagnosis

- When troubleshooting air bag system, be sure to follow “Diagnosis” in Air Bag System section. Bypassing these procedures may result in extended diagnostic time, incorrect diagnosis, and incorrect parts replacement.
- Never use electrical test equipment other than that specified.

⚠ WARNING

Never attempt to measure the resistance of the air bag (inflator) modules (driver, passenger, side and curtain) and seat belt pretensioners (driver and passenger). It is very dangerous as the electric current from the tester may deploy the air bag or activate the pretensioner.

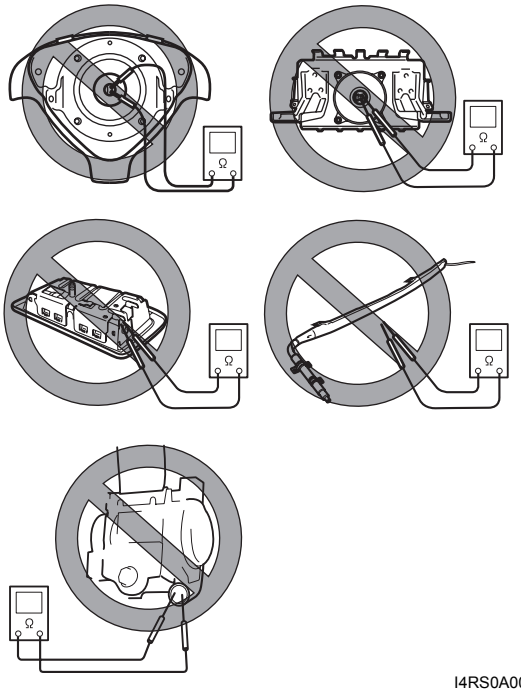

I4RS0A000002-02

Servicing and Handling

⚠ WARNING

Many of service procedures require disconnection of "A/B" fuse and all air bag (inflator) module(s) from initiator circuit to avoid an accidental deployment.
Driver, Passenger, Side and Curtain Air Bag (Inflator) Modules

- **For handling and storage of a live air bag (inflator) module, select a place where the ambient temperature below 65 °C (150 °F), without high humidity and away from electric noise.**
- **When carrying a live air bag (inflator) module, make sure the bag opening is pointed away from you. In case of an accidental deployment, the bag will then deploy with minimal chance of injury. Never carry the air bag (inflator) module by the wires or connector on the underside of the module. When placing a live air bag (inflator) module on a bench or other surface, always face the bag up, away from the surface. As the live passenger air bag (inflator) module must be placed with its bag (trim cover) facing up, place it on the workbench with a slit (1) or use the workbench vise (2) to hold it securely at its lower mounting bracket (3). It is also prohibited to place anything on top of the trim cover and stack air bag (inflator) modules. This is necessary so that a free space is provided to allow the air bag to expand in the unlikely event of accidental deployment. Otherwise, personal injury may result.**
- **Never dispose of live (undeployed) air bag (inflator) modules (driver, passenger, side and curtain). If disposal is necessary, be sure to deploy them according to deployment procedures described in "Air Bag (Inflator) Module and Seat Belt Pretensioner Disposal in Section 8B" before disposal.**
- **The air bag (inflator) module immediately after deployment is very hot. Wait for at least half an hour to cool it off before proceeding the work.**
- **After an air bag (inflator) module has been deployed, the surface of the air bag may contain a powdery residue. This powder consists primarily of cornstarch (used to lubricate the bag as it inflates) and by-products of the chemical reaction. As with many service procedures, gloves and safety glasses should be worn.**

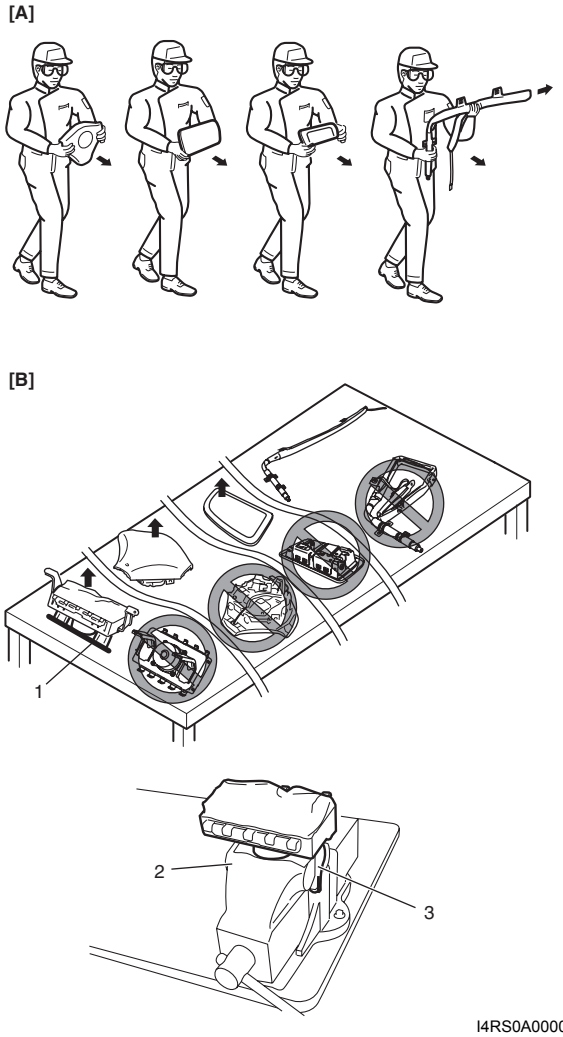

I4RS0A000003-02

[A]:	Always carry air bag (inflator) module with trim cover (air bag opening) away from body.
[B]:	Always place air bag (inflator) module on workbench with trim cover (air bag opening) up, away from loose objects.

⚠ WARNING

SDM

- **For handling and storage of a SDM, select a place where the ambient temperature below 65 °C (150 °F), without high humidity and away from electric noise.**
- **During service procedures, be very careful when handling a Sensing and Diagnostic Module (SDM). Never strike or jar the SDM.**
- **Never power up the air bag system when the SDM is not rigidly attached to the vehicle. All SDM and mounting bracket fasteners must be carefully torqued and the arrow must be pointing toward the front of the vehicle to ensure proper operation of the air bag system.**
  The SDM could be activated when powered while not rigidly attached to the vehicle which could cause deployment and result in personal injury.

⚠ WARNING

Driver and Passenger Seat Belt Pretensioners

- **For handling and storage of a live seat belt pretensioner, select a place where the ambient temperature below 65 °C (150 °F), without high humidity and away from electric noise.**
- **Never carry seat belt pretensioner by wire or connector of pretensioner. When placing a live seat belt pretensioner on the workbench or some place like that, never put something on seat belt pretensioner. Otherwise, personal injury may result.**
- **Never dispose of live (inactivated) seat belt pretensioners (drive and passenger). If disposal is necessary, be sure to activate them according to activation procedures described in "Air Bag (Inflator) Module and Seat Belt Pretensioner Disposal in Section 8B" before disposal.**
- **The seat belt pretensioner immediately after activation is very hot. Wait for at least half an hour to cool it off before proceeding the work.**
- **With many service procedures, gloves and safety glasses should be worn to prevent any possible irritation of the skin or eyes.**

- Even when the accident was light enough not to cause air bags to activate, be sure to inspect system parts and other related parts according to instructions under "Repair and Inspection Required after Accident in Section 8B".
- When servicing parts other than air bag system, if shocks may be applied to air bag system component parts, remove those parts beforehand.
- When handling the air bag (inflator) modules (driver, passenger, side and curtain), seat belt pretensioners (driver and passenger), forward sensor, side sensors or SDM, be careful not to drop it or apply an impact to it. If an excessive impact was applied, never attempt disassembly or repair but replace it with a new one.
- When grease, cleaning agent, oil, water, etc. has got onto air bag (inflator) modules (driver, passenger, side and curtain) or seat belt pretensioners (drive and passenger), wipe off immediately with a dry cloth.
- Air bag wire harness is included in floor and instrument panel wire harnesses. Air bag wire harness branched off from floor and instrument panel wire harnesses can be identified easily as it is covered with a yellow protection tube and it has yellow connectors. Be very careful when handling it.
- When an open in air bag wire harness, damaged wire harness, connector or terminal is found, replace wire harness, connectors and terminals as an assembly.
- Do not apply power to the air bag system unless all components are connected or a diagnostic flow requests it, as this will set a DTC.
- Never use air bag system component parts from another vehicle.
- When using electric welding, be sure to disconnect all air bag (inflator) module connectors and pretensioner connectors from air bag wire harness respectively.
- Never expose air bag system component parts directly to hot air (drying or baking the vehicle after painting) or flames.
- WARNING / CAUTION labels are attached on each part of air bag system components. Be sure to follow the instructions.
- After vehicle is completely repaired, perform "Air Bag Diagnostic System Check in Section 8B".

General Precautions

S7RW0A0000002

The WARNING and CAUTION describe some general precautions that you should observe when servicing a vehicle. These general precautions apply to many of the service procedures, and they will not necessarily be repeated with each procedure to which they apply.

⚠ WARNING

- **Whenever raising a vehicle for service, be sure to follow the instructions under "Vehicle Lifting Points in Section 0A".**
- **When it is necessary to do service work with the engine running, make sure that the parking brake is set fully and the transmission is in Neutral (for manual transmission vehicles) or Park (for automatic transmission vehicles), Keep hands, hair, clothing, tools, etc. away from the fan and belts when the engine is running.**
- **When it is necessary to run the engine indoors, make sure that the exhaust gas is forced outdoors.**
- **Do not perform service work in areas where combustible materials can come in contact with a hot exhaust system. When working with toxic or flammable materials (such as gasoline and refrigerant), make sure that the area you work in is well-ventilated.**
- **To avoid getting burned, keep away from hot metal parts such as the radiator, exhaust manifold, tail pipe, muffler, etc.**
- **New and used engine oil can be hazardous. Children and pets may be harmed by swallowing new or used oil. Keep new and used oil and used engine oil filters away from children and pets. Continuous contact with used engine oil has been found to cause [skin] cancer in laboratory animals. Brief contact with used oil may irritate skin. To minimize your exposure to used engine oil, wear a long-sleeve shirt and moisture-proof gloves (such as dish washing gloves) when changing engine oil. If engine oil contacts your skin, wash thoroughly with soap and water. Launder any clothing or rags if wet with oil, recycle or properly dispose of used oil and filters.**
- **Be sure to observe following instructions when handling service materials such as fuel, oil, fluid, coolant, grease, sealant, thread lock cement, etc. Otherwise, your health may be ruined.**
  - **Whenever handling any of these service materials, wear safety glasses to protect your eyes. If it gets into your eye, it may cause inflammation.**
  - **Whenever handling any of these service materials, wear moisture-proof gloves to protect your skin. If it adheres to your skin, it may cause inflammation.**
  - **Do not swallow any of these service materials. It would cause diarrhea or nausea.**
  - **Keep all these materials out of children's reach.**
- **Make sure the bonnet is fully closed and latched before driving. If it is not, it can fly up unexpectedly during driving, obstructing your view and resulting in an accident.**

- Before starting any service work, cover fenders, seats and any other parts that are likely to get scratched or stained during servicing. Also, be aware that what you wear (e.g., buttons) may cause damage to the vehicle's finish.

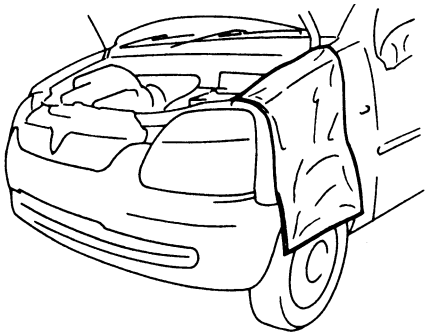

I2RH01010025-01

- When performing service to electrical parts that does not require use of battery power, disconnect the negative cable of the battery.
- When disconnecting the negative cable from the battery, be careful to the following.
  - Check and record DTCs in ECM if necessary before disconnecting.
  - Record displayed contents of the clock and/or audio system, etc. before disconnecting and reset it as before after connecting.
  - For vehicle equipped with electric throttle body system, perform electric throttle body system calibration referring to “Electric Throttle Body System Calibration in Section 1C” after reconnecting the negative cable to the battery.
  - For vehicle equipped with ESP®, calibrate steering angle sensor referring to “Sensor Calibration in Section 4F” after reconnecting the negative cable to the battery.

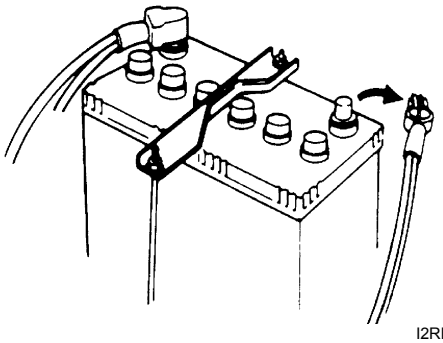

I2RH01010026-01

- When removing the battery, be sure to disconnect the negative cable first and then the positive cable. When reconnecting the battery, connect the positive cable first and then the negative cable, and replace the terminal cover.

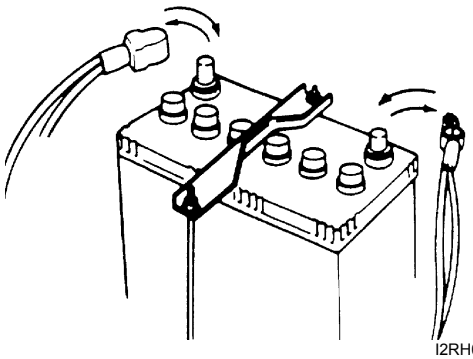

I2RH01010027-01

- When removing parts that are to be reused, be sure to keep them arranged in an orderly manner so that they may be reinstalled in the proper order and position.

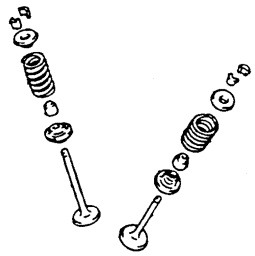

I5RW0A000002-01

- Whenever you use oil seals, gaskets, packing, O-rings, locking washers, split pins, self-locking nuts, and certain other parts as specified, be sure to use new ones. Also, before installing new gaskets, packing, etc., be sure to remove any residual material from the mating surfaces.

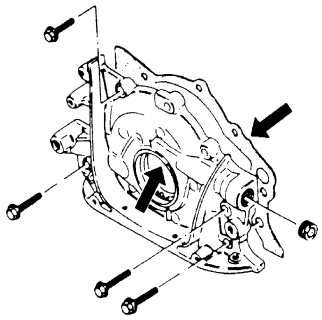

I2RH01010029-01

- Make sure that all parts used in reassembly are perfectly clean.
  When use of a certain type of lubricant, bond or sealant is specified, be sure to use the specified type.

  “A”: Water tight sealant 99000–31250 (SUZUKI Bond No.1207F)

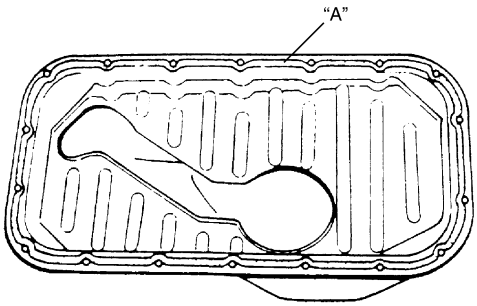

I2RH01010030-01

- Be sure to use special tools when instructed.

  Special tool
  (A): 09917–98221
  (B): 09916–58210

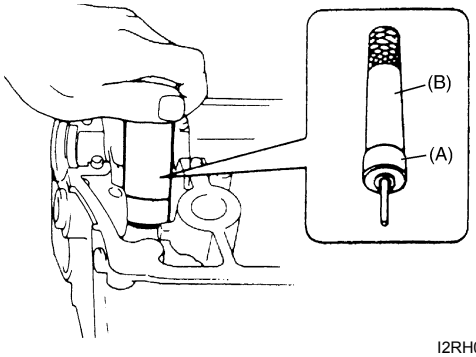

I2RH01010031-01

- When disconnecting vacuum hoses, attach a tag describing the correct installation positions so that the hoses can be reinstalled correctly.

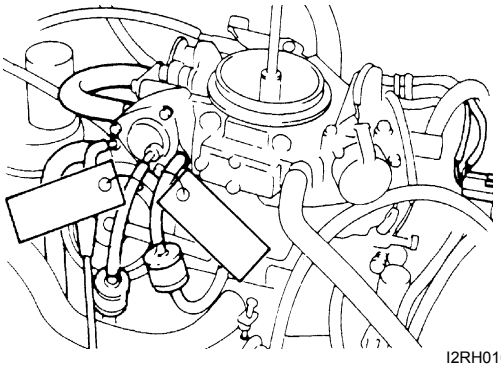

I2RH01010032-01

- After servicing fuel, oil, coolant, vacuum, exhaust or brake systems, check all lines related to the system for leaks.

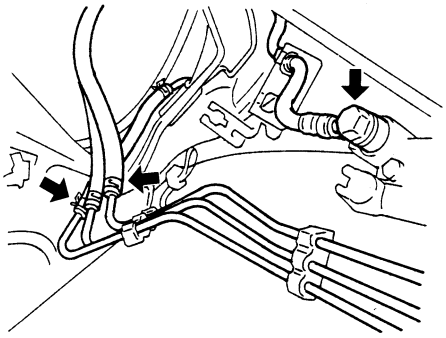

I2RH01010033-01

- For vehicles equipped with fuel injection systems, never disconnect the fuel line between the fuel pump and injector without first releasing the fuel pressure, or fuel can be sprayed out under pressure.
- When performing a work that produces a heat exceeding 80 °C (176 °F) in the vicinity of the electrical parts, remove the heat sensitive electrical part(s) beforehand.

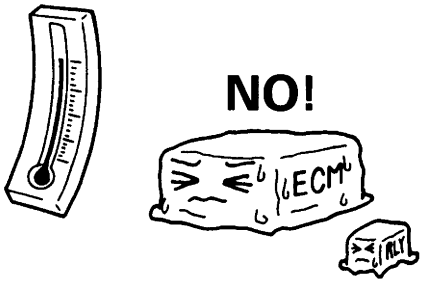

I2RH01010034-01

- Use care not to expose connectors and electrical parts to water which will be a cause of a trouble.

I2RH01010035-01

- Always be careful not to handle electrical parts (computer, relay, etc.) in a rough manner or drop them.

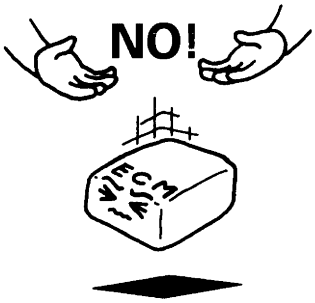

I2RH01010036-01

Warning for Wheel (with tire) Removal

S7RW0A0000003

⚠ WARNING

When removing any of these wheels installed using wheel bolts, never remove all wheel bolts at the same time. Leave at least 1 bolt for each wheel as it is to prevent wheel from dropping. When removing this remaining 1 bolt, hold wheel and tire so as not to allow them to come off.

Precautions in Servicing 4WD Model

S7RW0A0000004

⚠ **CAUTION**

- **Never perform any of the following [A], [B] and [C] types of service work.**
  If it is performed while 4WD-auto mode or 4WD-lock mode is selected, front wheels (or rear wheels) drive rear wheels (or front wheels) and vehicle accident, drivetrain damage and personal injury may result.
  Also, if it is performed while 2WD mode is selected, the coupling may be damaged because of the difference in revolution speed between front wheels and rear wheels.

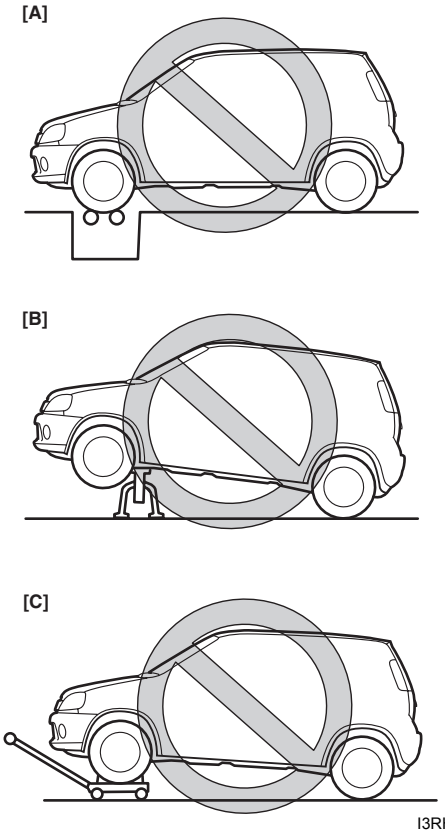

I3RH0A000004-03

[A]:	Testing with 2-wheel chassis dynamometer or speedometer tester.
[B]:	Driving front wheels, which are jacked up.
[C]:	Towing under the condition where either front or rear wheels can not rotate.

- **When testing with 2-wheel chassis dynamometer or speedometer tester, be sure to select 4WD system to 4WD-auto mode or 4WD-lock mode and use 2-wheel free roller together or make the vehicle as front wheel drive by removing propeller shaft.**
- **When testing with 2-wheel brake tester, be sure to observe the following instructions. Otherwise, drivetrain damage and personal injury may result.**
  - **Shift transaxle to N (Neutral) position.**
  - **Select 4WD system to 2WD mode.**
  - **Run engine at specified idle speed.**
  - **Rotate wheels (tires) by brake tester at vehicle speed below 5 km/h (3 mile/h).**
  - **Do not rotate wheels (tires) for 1 min. or more.**
- **When using On-vehicle type wheel balancing equipment (1), be sure to select 4WD system to 4WD-auto mode or 4WD-lock mode and jack up all four wheels, off the ground completely and support vehicle with safety stands (2).**
  Be careful of other wheels, which will rotate at the same time.
  Using it with 2WD mode may damage coupling.

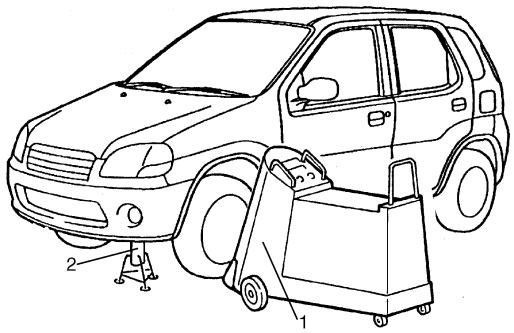

I3RH01010062-01

- **This vehicle should be towed under one of the following conditions:**
  - **With all wheels on a flatbed truck.**
  - **With all wheels on the ground.**

Precautions for Catalytic Converter

S7RW0A0000005

For vehicles equipped with a catalytic converter, use only unleaded gasoline and be careful not to let a large amount of unburned gasoline enter the converter or it can be damaged.

- Conduct a spark jump test only when necessary, make it as short as possible, and do not open the throttle.
- Conduct engine compression checks within the shortest possible time.
- Avoid situations which can result in engine misfire (e.g. starting the engine when the fuel tank is nearly empty.)

Precautions for Installing Mobile Communication Equipment

S7RW0A0000006

When installing mobile communication equipment such as CB (Citizens-Band)-radio or cellular-telephone, be sure to observe the following precautions.
Failure to follow cautions may adversely affect electronic control system.

- Keep the antenna as far away as possible from the vehicle's electronic control unit.
- Keep the antenna feeder more than 20 cm (7.9 in.) away from electronic control unit and its wire harnesses.
- Do not run the antenna feeder parallel with other wire harnesses.
- Confirm that the antenna and feeder are correctly adjusted.

Precaution for CAN Communication System

S7RW0A0000007

- The loose (1) in the wire harnesses twist of the CAN lines except around the connector (3) should be within 100 mm (3.9 in.). Refer to the wiring diagram for the CAN lines discrimination. Excessively-loosed lines may be influenced by the electric noise.

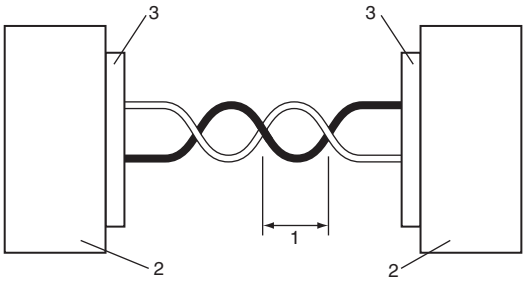

I4JA01000002-01

- Do not connect terminals of the CAN line using a bypass wire (1). Otherwise, the CAN line may be influenced by the electric noise.

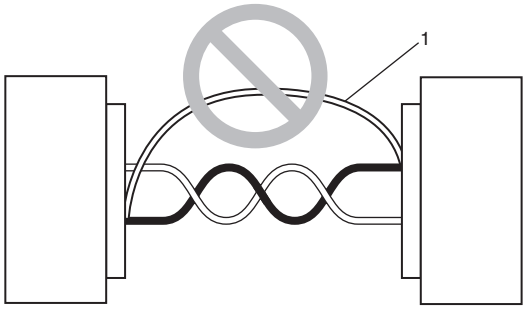

I4JA01000003-01

Precautions for Electrical Circuit Service

S7RW0A0000008

- When replacing a fuse, make sure to use a fuse of the specified capacity. Use of a fuse with a larger capacity will cause a damage to the electrical parts and a fire.

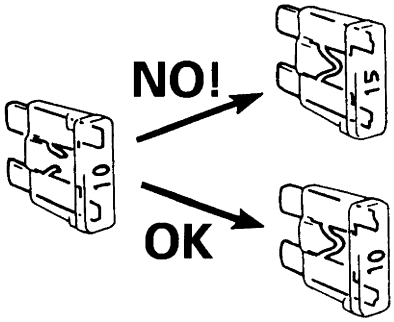

I2RH01010038-01

- When disconnecting and connecting coupler, make sure to turn ignition switch OFF, or electronic parts may get damaged.

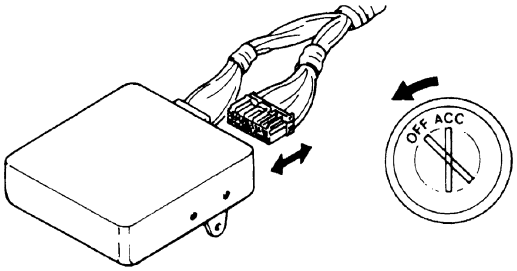

I2RH01010039-01

- When disconnecting connectors, never pull the wiring harness. Unlock the connector lock first and then pull them apart by holding connectors themselves.

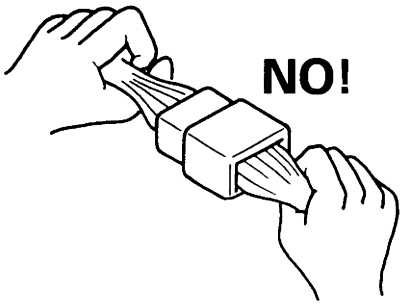

I2RH01010040-01

- When connecting connectors, also hold connectors and put them together until they lock securely (a click is heard).

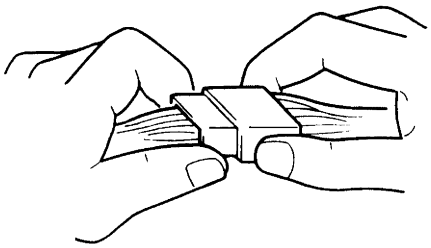

I2RH01010041-01

- When installing the wiring harness, fix it with clamps so that no slack is left.

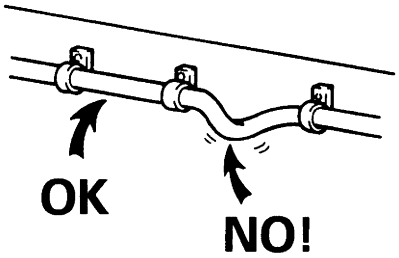

I2RH01010042-01

- When installing vehicle parts, be careful so that the wiring harness is not interfered with or caught by any other part.

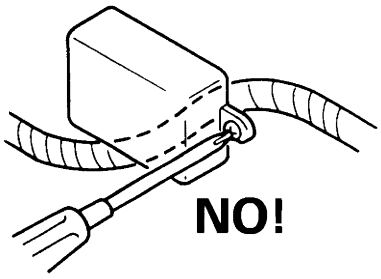

I2RH01010043-01

- To avoid damage to the harness, protect its part which may contact against a part forming a sharp angle by winding tape or the like around it.

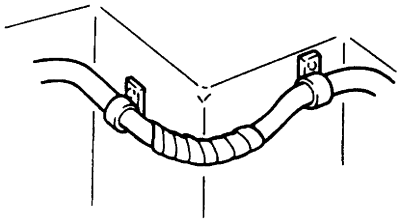

I2RH01010044-01

- Be careful not to touch the electrical terminals of parts which use microcomputers (e.g. electronic control unit like as ECM, PCM, P/S controller, etc.). The static electricity from your body can damage these parts.

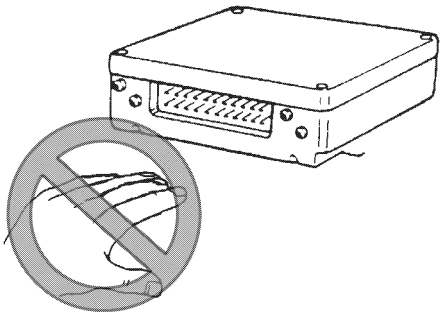

I3RM0A000004-01

- Never connect any tester (voltmeter, ohmmeter, or whatever) to electronic control unit when its coupler is disconnected. Attempt to do it may cause damage to it.
- Never connect an ohmmeter to electronic control unit with its coupler connected to it. Attempt to do it may cause damage to electronic control unit and sensors.
- Be sure to use a specified voltmeter / ohmmeter. Otherwise, accurate measurements may not be obtained or personal injury may result. If not specified, use a voltmeter with high impedance (M Ω/V minimum) or a digital type voltmeter.
- When taking measurements at electrical connectors using a tester probe, be sure to insert the probe (2) from the wire harness side (backside) of the connector (1).

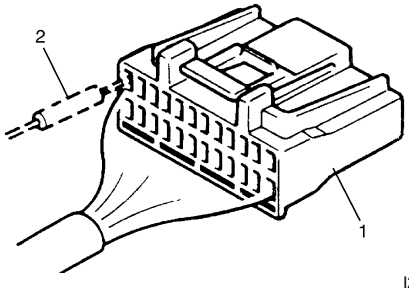

I2RH01010046-01

- When connecting meter probe (2) from terminal side of coupler (1) because it can't be connected from harness side, use extra care not to bend male terminal of coupler of force its female terminal open for connection.
  In case of such coupler as shown connect probe as shown to avoid opening female terminal.
  Never connect probe where male terminal is supposed to fit.

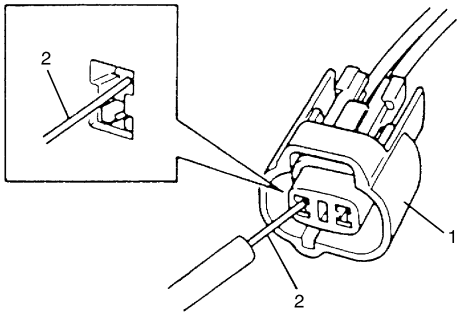

I2RH01010047-01

- When checking connection of terminals, check its male half for bend and female half for excessive opening and both for locking (looseness), corrosion, dust, etc.
- Before measuring voltage at each terminal, check to make sure that battery voltage is 11 V or higher. Such terminal voltage check at low battery voltage will lead to erroneous diagnosis.

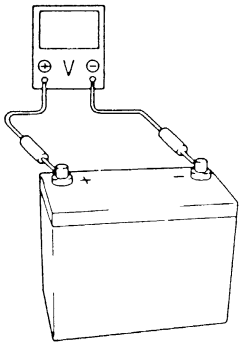

I2RH01010048-01

Air Bag Warning

S7RW0A0000009

⚠ WARNING

For vehicles equipped with Supplemental Restraint (Air Bag) System:

- **Service on and around the air bag system components or wiring must be performed only by an authorized SUZUKI dealer. Refer to "Air Bag System Components, Wiring and Connectors Location in Section 8B" in order to confirm whether you are performing service on or near the air bag system components or wiring. Please observe all WARNINGS in Air Bag System section and "Precautions on Service and Diagnosis of Air Bag System in Section 8B" before performing service on or around the air bag system components or wiring. Failure to follow WARNINGS could result in unintentional activation of the system or could render the system inoperative. Either of these two conditions may result in severe injury.**
- **Technical service work must be started at least 90 seconds after the ignition switch is turned to the LOCK position and the negative cable is disconnected from the battery. Otherwise, the system may be activated by reserve energy in the Sensing and Diagnostic Module (SDM).**

Air Bag System Service Warning

S7RW0A0000010

⚠ WARNING

- **Service on or around the air bag system components or wiring must be performed only by an authorized SUZUKI dealer. Please observe all WARNINGS in Air Bag System section and "Precautions on Service and Diagnosis of Air Bag System in Section 8B" before performing service on or around the air bag system components or wiring. Failure to follow WARNINGS could result in unintended activation of the system or could render the system inoperative. Either of these two conditions may result in severe injury.**
- **The procedures in the air bag system section must be followed in the order listed to disable the air bag system temporarily and prevent false DTCs from setting. Failure to follow procedures could result in possible activation of the air bag system, personal injury or otherwise unneeded air bag system repairs.**

Fastener Caution

S7RW0A0000011

⚠ **CAUTION**

When fasteners are removed, always reinstall them at the same location from which they were removed. If a fastener needs to be replaced, use the correct part number fastener for that application. If the correct part number fastener is not available, a fastener of equal size and strength (or stronger) may be used. Fasteners that are not reused, and those requiring thread-locking compound, will be called out. The correct torque value must be used when installing fasteners that require it. If the conditions are not followed, parts or system damage could result.

Suspension Caution

S7RW0A0000012

⚠ **CAUTION**

- **All suspension fasteners are an important attaching part in that it could affect the performance of vital parts and systems, and/or could result in major repair expense. They must be replaced with one of the same part number or with an equivalent part if replacement becomes necessary. Do not use a replacement part of lesser quality or substitute design. Torque values must be used as specified during reassembly to assure proper retention of this part.**
- **Never attempt to heat, quench or straighten any suspension part. Replace it with a new part or damage to the part may result.**

Wheels and Tires Caution

S7RW0A0000013

⚠ **CAUTION**

All wheel fasteners are important attaching parts in that they could affect the performance of vital parts and systems, and/or could result in major repair expense. They must be replaced with one of the same part number or with an equivalent part if replacement becomes necessary. Do not use a replacement part of lesser quality or substitute design. Torque values must be used as specified during reassembly to assure proper retention of all parts.
There is to be no welding as it may result in extensive damage and weakening of the metal.

ABS Caution

S7RW0A0000015

- When ABS control module is removed / installed, do not use impact wrenches which generate shock or impact to avoid damaging sensors in ABS control module.

Precaution for Vehicle Equipped with ESP® System

S7RW0A0000016

- When testing with any of the following equipments (when vehicle is tested by rotating wheels (tires) under vehicle stop), be sure to deactivate ESP® system referring to “Precautions in Speedometer Test or Other Tests in Section 4F” to obtain correct data.
  - 2 or 4-wheel chassis dynamometer
  - Speedometer tester
  - Brake tester
  - Etc.

ESP® control module

- When ESP® control module is removed / installed, do not use impact wrenches which generate shock or impact to avoid damaging sensors in ESP® control module.
- When any of the following operation is done, calibrate steering angle sensor referring to “Sensor Calibration in Section 4F”.
  - When battery or dome fuse is removed.
  - When steering angle sensor is replaced.
  - When ESP® hydraulic unit is replaced.

Brake Caution

S7RW0A0000014

⚠ **CAUTION**

All brake fasteners are important attaching parts in that they could affect the performance of vital parts and systems, and/or could result in major repair expense. They must be replaced with one of same part number or with an equivalent part if replacement becomes necessary. Do not use a replacement part of lesser quality or substitute design. Torque values must be used as specified during reassembly to assure proper retention of all parts. There is to be no welding as it may result in extensive damage and weakening of the metal.

Repair Instructions

Electrical Circuit Inspection Procedure

S7RW0A0006001

While there are various electrical circuit inspection methods, described here is a general method to check its open and short circuit by using an ohmmeter and a voltmeter.

Open Circuit Check

Possible causes for the open circuit are as follows. As the cause is in the connector or terminal in many cases, they need to be checked particularly carefully.

- Loose connection of connector
- Poor contact of terminal (due to dirt, corrosion or rust on it, poor contact tension, entry of foreign object etc.)
- Wire harness being open

When checking system circuits including an electronic control unit such as ECM, TCM, ABS / ESP® control module, etc., it is important to perform careful check, starting with items which are easier to check.

1) Disconnect negative (–) cable from battery
2) Check each connector at both ends of the circuit being checked for loose connection. Also check lock condition of connector if equipped with connector lock.

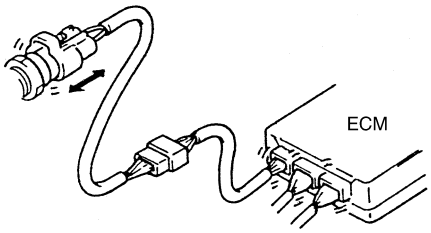

I2RH01010049-01

3) Using a test male terminal, check both terminals of the circuit being checked for contact tension of its female terminal. Check each terminal visually for poor contact (possibly caused by dirt, corrosion, rust entry of foreign object, etc.). At the same time, check to make sure that each terminal is locked in the connector fully.

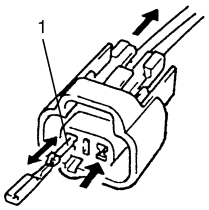

I2RH01010050-01

1.	Check contact tension by inserting and removing just for once.

4) Using continuity check or voltage check the following procedure, check the wire harness for open circuit and poor connection with its terminals. Locate abnormality, if any.

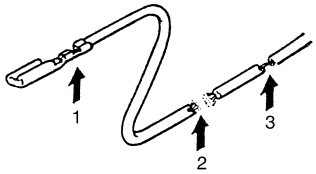

I2RH01010051-01

1.	Looseness of crimping
2.	Open
3.	Thin wire (single strand of wire)

Continuity Check

1) Measure resistance between connector terminals at both ends of the circuit being checked (between “A-1” and “C-1” in the figure). If no continuity is indicated (infinity or over limit), that means that the circuit is open between terminals “A-1” and “C-1”.

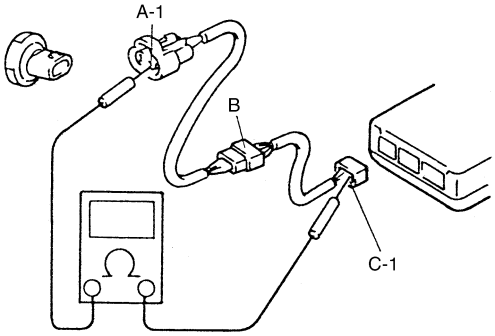

I2RH01010052-01

2) Disconnect the connector included in the circuit (connector-B in the figure) and measure resistance between terminals “A-1” and “B-1”.
If no continuity is indicated, that means that the circuit is open between terminals “A-1” and “B-1”. If continuity is indicated, there is an open circuit between terminals “B-1” and “C-1” or an abnormality in connector-B.

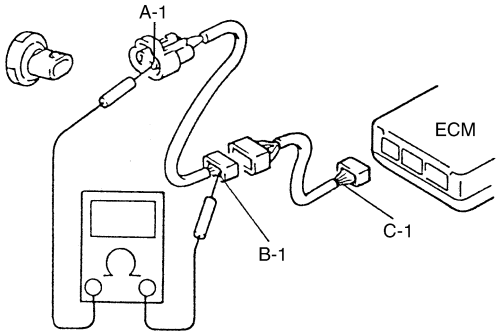

I2RH01010053-01

Voltage Check

If voltage is supplied to the circuit being checked, voltage check can be used as circuit check.

1) With all connectors connected and voltage applied to the circuit being checked, measure voltage between each terminal and body ground.
   a) If measurements were taken as shown in the figure and results were as listed in the following, it means that the circuit is open between terminals “B-1” and “A-1”.

      Voltage between
      “C-1” and body ground: Approx. 5 V
      “B-1” and body ground: Approx. 5 V
      “A-1” and body ground: 0 V

   b) Also, if measured values were as listed in the following, it means that there is a resistance (abnormality) of such level that corresponds to the voltage drop in the circuit between terminals “A-1” and “B-1”.

      Voltage between
      “C-1” and body ground: Approx. 5 V
      “B-1” and body ground: Approx. 5 V
      “A-1” and body ground: Approx. 3 V

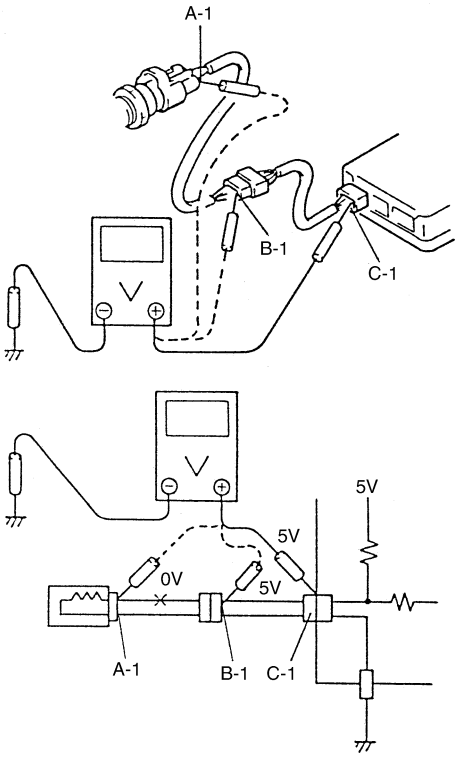

I5RH01000005-01

Short Circuit Check (Wire Harness to Ground)

1) Disconnect negative (–) cable at battery.
2) Disconnect connectors at both ends of the circuit to be checked.

NOTE

If the circuit to be checked is connected to other parts (1), disconnect all connectors of those parts.
Otherwise, diagnosis will be misled.

3) Measure resistance between terminal at one end of circuit (“A-1” terminal in the figure) and body ground. If continuity is indicated, it means that there is a short to ground between terminals “A-1” and “C-1” of the circuit.

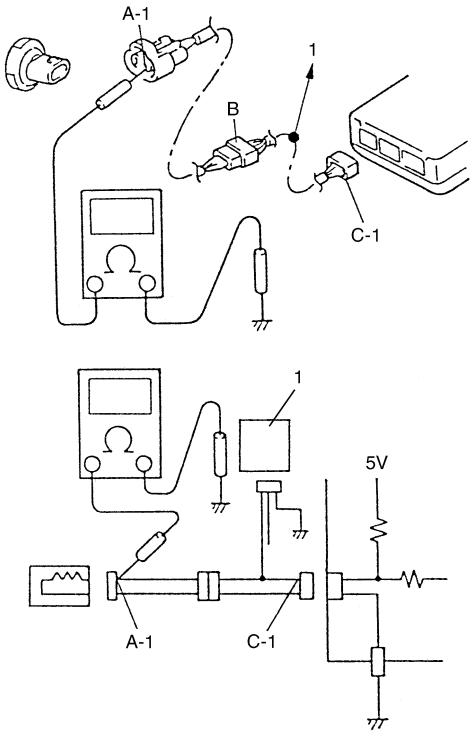

I5RH01000006-01

4) Disconnect the connector included in circuit (connector-B) and measure resistance between “A-1” and body ground. If continuity is indicated, it means that the circuit is shorted to the ground between terminals “A-1” and “B-1”.

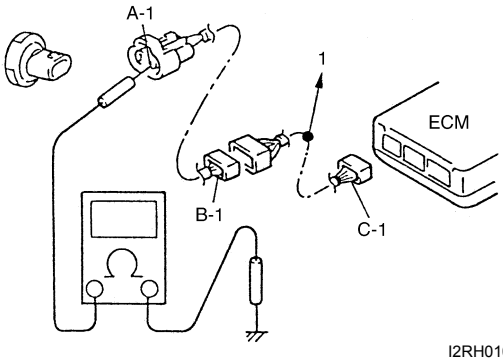

I2RH01010056-01

1. To other parts

Intermittent and Poor Connection Inspection

S7RW0A0006002

Most intermittent are caused by faulty electrical connections or wiring, although a sticking relay or solenoid can occasionally be at fault. When checking it for proper connection, perform careful check of suspect circuits for:

- Poor mating of connector halves, or terminals not fully seated in the connector body (backed out).
- Dirt or corrosion on the terminals. The terminals must be clean and free of any foreign material which could impede proper terminal contact. However, cleaning the terminal with a sand paper or the like is prohibited.
- Damaged connector body, exposing the terminals to moisture and dirt, as well as not maintaining proper terminal orientation with the component or mating connector.

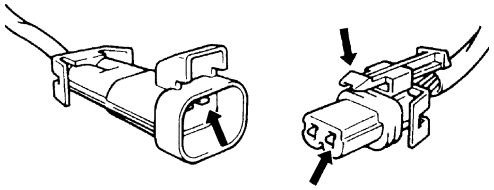

I2RH01010057-01

- Improperly formed or damaged terminals.
  Check each connector terminal in problem circuits carefully to ensure good contact tension by using the corresponding mating terminal.
  If contact tension is not enough, reform it to increase contact tension or replace.

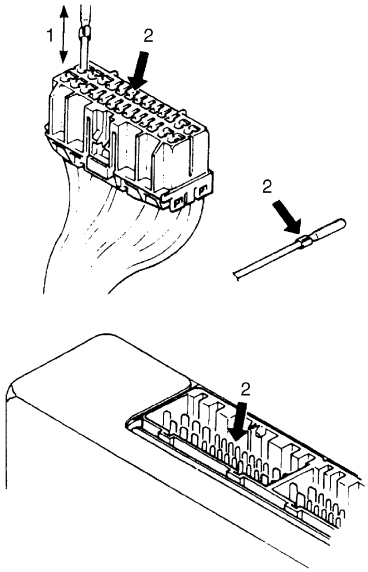

I5RH01000007-01

1.	Check contact tension by inserting and removing just once.
2.	Check each terminal for bend and proper alignment.

- Poor terminal-to-wire connection.
  Check each wire harness in problem circuits for poor connection by shaking it by hand lightly. If any abnormal condition is found, repair or replace.

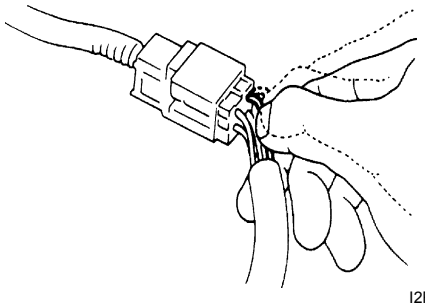

I2RH01010059-01

- Wire insulation which is rubbed through, causing an intermittent short as the bare area touches other wiring or parts of the vehicle.
- Wiring broken inside the insulation. This condition could cause continuity check to show a good circuit, but if only 1 or 2 strands of a multi-strand-type wire are intact, resistance could be far too high.
  If any abnormality is found, repair or replace.

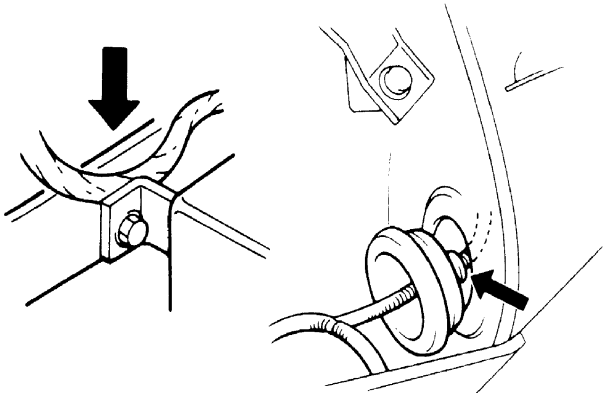

I2RH01010060-01

Section 0

General Information

0

CONTENTS

General Information 0A-1

General Description 0A-1
Abbreviations 0A-1
Symbols 0A-2
Wire Color Symbols 0A-2
Fasteners Information 0A-3
Vehicle Lifting Points.....0A-5
Vehicle Identification Number 0A-6
Engine Identification Number.....0A-6
Transmission Identification Number.....0A-6

Component Location 0A-7
Warning, Caution and Information Labels Location 0A-7

Maintenance and Lubrication..... 0B-1

Precautions.....0B-1
Precautions for Maintenance and Lubrication.....0B-1

Scheduled Maintenance 0B-1
Maintenance Schedule under Normal Driving Conditions 0B-1
Maintenance Recommended under Severe Driving Conditions.....0B-2

Repair Instructions 0B-3
Accessory Drive Belt Inspection.....0B-3
Accessory Drive Belt Replacement.....0B-4
Valve Lash (Clearance) Inspection 0B-4
Engine Oil and Filter Change.....0B-4
Engine Coolant Change.....0B-5
Exhaust System Inspection.....0B-6
Spark Plug Replacement 0B-6
Air Cleaner Filter Inspection.....0B-6
Air Cleaner Filter Replacement.....0B-6
Fuel Lines and Connections Inspection 0B-6
Fuel Filter Replacement.....0B-6
Fuel Tank Inspection.....0B-7
PCV Valve Inspection 0B-7
Fuel Evaporative Emission Control System Inspection.....0B-7
Brake Discs and Pads (Front) Inspection.....0B-7
Brake Drums and Shoes (Rear) Inspection 0B-7
Brake Hoses and Pipes Inspection 0B-8
Brake Fluid Replacement.....0B-8
Brake Lever and Cable Inspection 0B-8
Clutch Pedal Inspection 0B-8
Clutch Fluid Inspection.....0B-8
Tires Inspection.....0B-9
Wheel Discs Inspection.....0B-9
Wheel Bearing Inspection 0B-9
Suspension System Inspection 0B-9
Steering System Inspection 0B-9
Drive Shaft (Axle) Boots Inspection 0B-10
Propeller Shaft (4WD) Inspection.....0B-10
Manual Transaxle Oil Inspection.....0B-10
Manual Transaxle Oil Replacement.....0B-10
Automatic Transaxle Fluid Level Inspection.....0B-10
Automatic Transaxle Fluid Replacement 0B-10
Automatic Transaxle Fluid Cooler Hose Inspection.....0B-10
Transfer Oil Inspection (4WD).....0B-11
Transfer Oil Replacement (4WD).....0B-11
Rear Deferential Oil Inspection (4WD).....0B-11
Rear Deferential Oil Replacement (4WD).....0B-11
All Latches, Hinges and Locks Inspection.....0B-11
HVAC Air Filter (If Equipped) Inspection.....0B-11
HVAC Air Filter (If Equipped) Replacement.....0B-11
Final Inspection for Maintenance Service 0B-11

Specifications.....0B-12
Tightening Torque Specifications.....0B-12

Special Tools and Equipment 0B-13
Recommended Fluids and Lubricants.....0B-13
Special Tool 0B-13

General Information

General Description

Abbreviations

S7RW0A0101001

A:
ABDC: After Bottom Dead Center
ABS: Anti-lock Brake System
AC: Alternating Current
A/C: Air Conditioning
A-ELR: Automatic-Emergency Locking Retractor
A/F: Air Fuel Mixture Ratio
ALR: Automatic Locking Retractor
API: American Petroleum Institute
APP sensor: Accelerator Pedal Position Sensor
A/T: Automatic Transmission, Automatic Transaxle
ATDC: After Top Dead Center
ATF: Automatic Transmission Fluid, Automatic Transaxle Fluid
B:
B+: Battery Positive Voltage
BBDC: Before Bottom Dead Center
BCM: Body Electrical Control Module
BTDC: Before Top Dead Center
C:
CAN: Controller Area Network
CKT: Circuit
CKP Sensor: Crankshaft Position Sensor
CMP Sensor: Camshaft Position Sensor
CO: Carbon Monoxide
CPP Switch: Clutch Pedal Position Switch (Clutch Switch, Clutch Start Switch)
CPU: Central Processing Unit
CRS: Child Restraint System
D:
DC: Direct Current
DLC: Data Link Connector (Assembly Line Diag. Link, ALDL, Serial Data Link, SDL)
DOHC: Double Over Head Camshaft
DOJ: Double Offset Joint
DRL: Daytime Running Light
DTC: Diagnostic Trouble Code (Diagnostic Code)
E:
EBCM: Electronic Brake Control Module, ABS Control Module
EBD: Electronic Brake Force Distribution
ECM: Engine Control Module
ECT Sensor: Engine Coolant Temperature Sensor (Water Temp. Sensor, WTS)
EFE Heater: Early Fuel Evaporation Heater (Positive Temperature Coefficient, PTC Heater)
EGR: Exhaust Gas Recirculation
EGRT Sensor: EGR Temperature Sensor (Recirculated Exhaust Gas Temp. Sensor, REGTS)
EPS: Electronic Power Steering
ESP®: Electronic Stability Program
EVAP: Evaporative Emission
EVAP Canister: Evaporative Emission Canister (Charcoal Canister)
F:
4WD: 4 Wheel Drive
G:
GEN: Generator
GND: Ground
GPS: Global Positioning System
H:
HVAC: Heating, Ventilating and Air Conditioning
HC: Hydrocarbons
HO2S: Heated Oxygen Sensor
I:
IAC Valve: Idle Air Control Valve (Idle Speed Control Solenoid Valve, ISC Solenoid Valve)
IAT Sensor: Intake Air Temperature Sensor (Air temperature Sensor, ATS)
ICM: Immobilizer Control Module
IG: Ignition
ISC Actuator: Idle Speed Control Actuator
ISO: International Organization for Standardization
J:
JIS: Japanese Industrial Standards
L:
LH: Left Hand
LHD: Left Hand Drive vehicle
LSPV: Load Sensing Proportioning Valve
M:
MAF Sensor: Mass Air Flow Sensor (Air Flow Sensor, AFS, Air Flow Meter, AFM)
MAP Sensor: Manifold Absolute Pressure Sensor (Pressure Sensor, PS)
Max: Maximum
MFI: Multiport Fuel Injection (Multipoint Fuel Injection)
Min: Minimum
MIL: Malfunction Indicator Lamp (“SERVICE ENGINE SOON” Light)
M/T: Manual Transmission, Manual Transaxle
N:
NOx: Nitrogen Oxides
O:
OBD: On-Board Diagnostic System (Self-Diagnosis Function)
O/D: Overdrive
OHC: Over Head Camshaft
O2S: Oxygen Sensor
P:
PCM: Powertrain Control Module
PCV: Positive Crankcase Ventilation
PNP: Park / Neutral Position
P/S: Power Steering
PSP Switch: Power Steering Pressure Switch (P/S Pressure Switch)
R:
RH: Right Hand
RHD: Right Hand Drive vehicle

S:
SAE: Society of Automotive Engineers
SDM: Sensing and Diagnostic Module (Air Bag Controller, Air bag Control Module)
SDT: Smart Diagnostic Tester
SFI: Sequential Multiport Fuel Injection
SOHC: Single Over Head Camshaft
T:
TBI: Throttle Body Fuel Injection (Single-Point Fuel Injection, SPI)
TCC: Torque Converter Clutch
TCM: Transmission Control Module (A/T Controller, A/T Control Module)
TDC: Top Dead Center
TP Sensor: Throttle Position Sensor
TVV: Thermal Vacuum Valve (Thermal Vacuum Switching Valve, TVSV, Bimetal Vacuum Switching Valve, BVSV)
TWC: Three Way Catalytic Converter (Three Way Catalyst)
2WD: 2 Wheel Drive
U:
USB: Universal Serial Bus
V:
VIN: Vehicle Identification Number
VSS: Vehicle Speed Sensor
VVT: Variable Valve Timing (Camshaft Position Control)
W:
WU-OC: Warm Up Oxidation Catalytic Converter
WU-TWC: Warm Up Three Way Catalytic Converter

Symbols

S7RW0A0101002

Symbol	Definition	Symbol	Definition
	Tightening torque	1216B	Apply SUZUKI BOND NO. 1216B 99000-31230
OIL	Apply oil (engine, transmission, transfer, differential)	Si	Apply SILICONE SEALANT 99000-31120
FLD	Apply fluid (brake, power steering or automatic transmission fluid)	366E	Apply SEALING COMPOUND 366E 99000-31090
A	Apply SUZUKI SUPER GREASE A 99000-25011		
C	Apply SUZUKI SUPER GREASE C 99000-25030	1322	Apply THREAD LOCK 1322 99000-32110
E	Apply SUZUKI SUPER GREASE E 99000-25050	1333B	Apply THREAD LOCK 1333B 99000-32020
H	Apply SUZUKI SUPER GREASE H 99000-25120	1342	Apply THREAD LOCK 1342 99000-32050
I	Apply SUZUKI SUPER GREASE I 99000-25210		
1215	Apply SUZUKI BOND NO. 1215 99000-31110		Do not reuse
1207F	Apply SUZUKI BOND NO. 1207F 99000-31250		Note on reassembly
1217G	Apply SUZUKI BOND NO. 1217G 99000-31260		

Wire Color Symbols

S7RW0A0101003

Symbol		Wire Color	Symbol		Wire Color
B	BLK	Black	O, Or	ORN	Orange
Bl	BLU	Blue	R	RED	Red
Br	BRN	Brown	W	WHT	White
G	GRN	Green	Y	YEL	Yellow
Gr	GRY	Gray	P	PNK	Pink
Lbl	LT BLU	Light blue	V	PPL	Violet
Lg	LT GRN	Light green			

There are two kinds of colored wire used in this vehicle. One is single-colored wire and the other is dual-colored (striped) wire.
The single-colored wire uses only one color symbol (i.e. “GRN”).
The dual-colored wire uses two color symbols (i.e. “GRN/YEL”). The first symbol represents the base color of the wire (“GRN” in the figure) and the second symbol represents the color of the stripe (“YEL” in the figure).

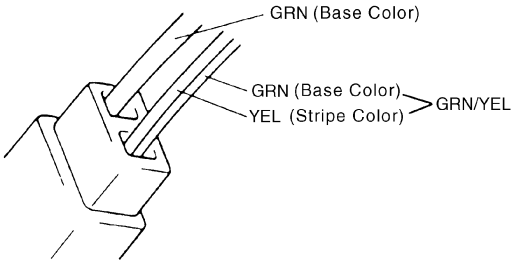

I2RH01010010-01

Fasteners Information

S7RW0A0101004

Metric Fasteners

Most of the fasteners used for this vehicle are JIS-defined and ISO-defined metric fasteners. When replacing any fasteners, it is most important that replacement fasteners be the correct diameter, thread pitch and strength.

⚠ CAUTION

Even when the nominal diameter (1) of thread is the same, the thread pitch (2) or the width across flats (3) may vary between ISO and JIS. Refer to JIS-TO-ISO Main Fasteners Comparison Table below for the difference. Installing a mismatched bolt or nut will cause damage to the thread.
Before installing, check the thread pitch for correct matching and then tighten it by hand temporarily. If it is tight, recheck the thread pitch.

JIS-TO-ISO Main Fasteners Comparison Table

		Nominal diameter				
		M6	M8	M10	M12	M14
JIS	Thread pitch	1.0	1.25	1.25	1.25	1.5
	Width across flats	10	12	14	17	19
ISO	Thread pitch	1.0	1.25	1.5	1.5	1.5
	Width across flats	10	13	16	18	21

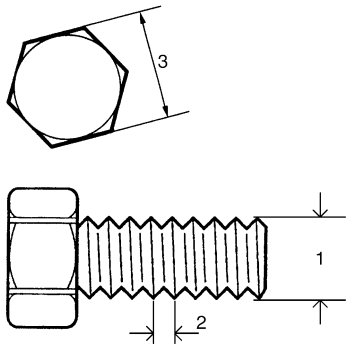

I4RH0A010005-01

Fastener Strength Identification

Most commonly used metric fastener strength property classes are 4T, 6.8, 7T, 8.8 and radial line with the class identification embossed on the head of each bolt. Some metric nuts will be marked with punch, 6 or 8 mark strength identification on the nut face. Figure shows the different strength markings.
When replacing metric fasteners, be careful to use bolts and nuts of the same strength or greater than the original fasteners (the same number marking or higher). It is likewise important to select replacement fasteners of the correct diameter and thread pitch. Correct replacement bolts and nuts are available through the parts division.
Metric bolts: Identification class numbers or marks correspond to bolt strength (increasing numbers represent increasing strength).

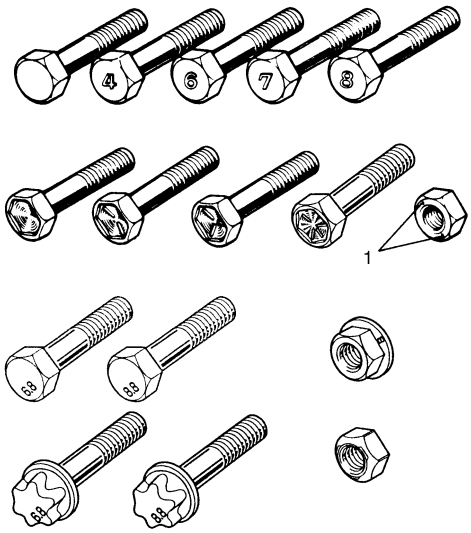

I5RH01010001-01

1. Nut strength identification

Standard Tightening Torque

Each fastener should be tightened to the torque specified in each section. If no description or specification is provided, refer to the following tightening torque chart for the applicable torque for each fastener. When a fastener of greater strength than the original one is used, however, use the torque specified for the original fastener.

NOTE

- **For the flanged bolt, flanged nut and self-lock nut of 4T and 7T strength, add 10% to the tightening torque given in the following chart.**
- **The following chart is applicable only where the fastened parts are made of steel light alloy.**

Tightening torque chart

Strength	Unit	Thread diameter (Nominal diameter) (mm)								
		4	5	6	8	10	12	14	16	18
A equivalent of 4T strength fastener	N·m	1.5	3.0	5.5	13	29	45	65	105	160
	kgf-m	0.15	0.30	0.55	1.3	2.9	4.5	6.5	10.5	16
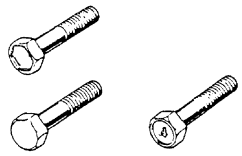 I2RH01010012-01	lb-ft	1.0	2.5	4.0	9.5	21.0	32.5	47.0	76.0	116.0
A equivalent of 6.8 strength fastener without flange	N·m	2.4	4.7	8.4	20	42	80	125	193	280
	kgf-m	0.24	0.47	0.84	2.0	4.2	8.0	12.5	19.3	28
I2RH01010013-01	lb-ft	2.0	3.5	6.0	14.5	30.5	58.0	90.5	139.5	202.5
A equivalent of 6.8 strength fastener with flange	N·m	2.4	4.9	8.8	21	44	84	133	203	298
	kgf-m	0.24	0.49	0.88	2.1	4.4	8.4	13.3	20.3	29.8
*: Self-lock nut (6 strength)	lb-ft	2.0	3.5	6.5	15.5	32.0	61.0	96.5	147.0	215.5
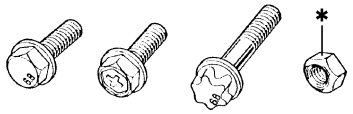 I2RH01010014-01										
A equivalent of 7T strength fastener	N·m	2.3	4.5	10	23	50	85	135	210	240
	kgf-m	0.23	0.45	1.0	2.3	5.0	8.5	13.5	21	24
I2RH01010015-01	lb-ft	2.0	3.5	7.5	17.0	36.5	61.5	98.0	152.0	174.0
A equivalent of 8.8 strength bolt (8 strength nut) without flange	N·m	3.1	6.3	11	27	56	105	168	258	373
	kgf-m	0.31	0.63	1.1	2.7	5.6	10.5	16.8	25.8	37.3
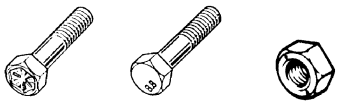 I2RH01010016-01	lb-ft	2.5	4.5	8.0	19.5	40.5	76.0	121.5	187.0	270.0
A equivalent of 8.8 strength bolt (8 strength nut) with flange	N·m	3.2	6.5	12	29	59	113	175	270	395
	kgf-m	0.32	0.65	1.2	2.9	5.9	11.3	17.5	27	39.5
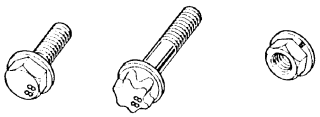 I2RH01010017-01	lb-ft	2.5	5.0	9.0	21.0	43.0	82.0	126.5	195.5	286.0

***:Self-lock nut**

Vehicle Lifting Points

S7RW0A0101005

⚠ WARNING

- **Before applying hoist to underbody, always take vehicle balance throughout service into consideration. Vehicle balance on hoist may change depending on what part to be removed.**
- **Before lifting up the vehicle, check to be sure that end of hoist arm is not in contact with brake pipe, fuel pipe, bracket or any other part.**
- **When using frame contact hoist, apply hoist as shown (right and left at the same position). Lift up the vehicle till 4 tires are a little off the ground and make sure that the vehicle will not fall off by trying to move vehicle body in both ways. Work can be started only after this confirmation.**
- **Make absolutely sure to lock hoist after vehicle is hoisted up.**

When Using Frame Contact Hoist

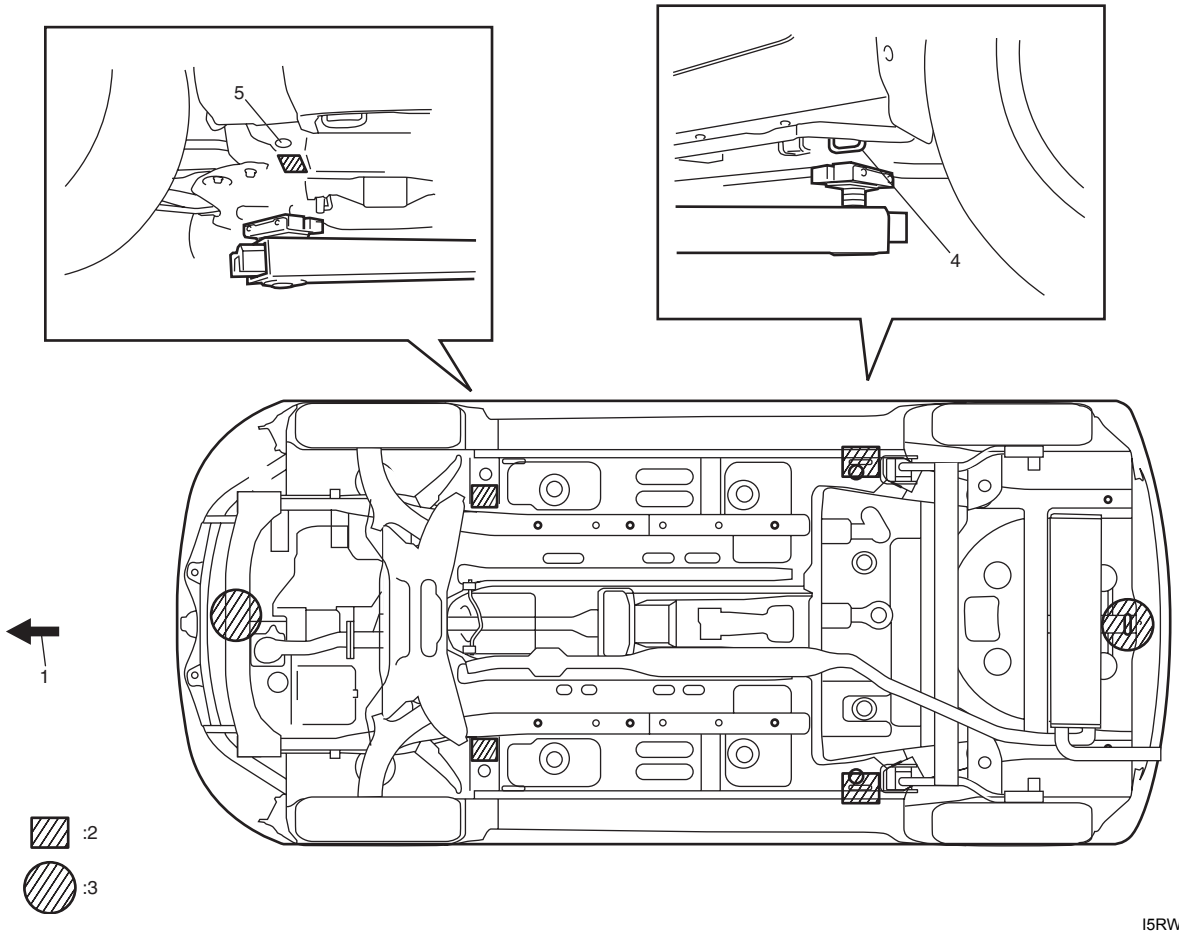

I5RW0A010001-02

1. Vehicle front	3. Floor jack position	5. Cap
2. Support position for frame contact hoist and safety stand	4. Body mounting stay	

When Using Floor Jack

⚠ WARNING

If the vehicle to be jacked up only at the front or rear end, be sure to block the wheels on ground in order to ensure safety.
After the vehicle is jacked up, be sure to support it on stands. It is extremely dangerous to do any work on the vehicle raised on jack alone.

⚠ CAUTION

Never apply jack against rear suspension parts (i.e., torsion beam, etc.) or vehicle floor, or it may get deformed.

In raising front or rear vehicle end off the floor by jacking, be sure to put the jack against engine front mounting member (1) or rear jacking bracket (2).

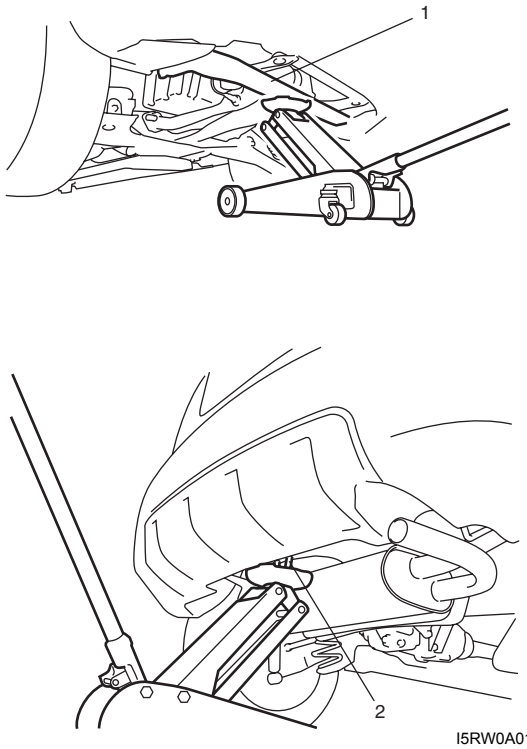

I5RW0A010002-02

To perform service with either front or rear vehicle end jacked up, be sure to place safety stands (1) under shaded position of vehicle body (front) or body mounting stay (2) (rear) so that vehicle body is securely supported. And then check to ensure that vehicle body does not slide on safety stands (1) and the vehicle is held stable for safety's sake.

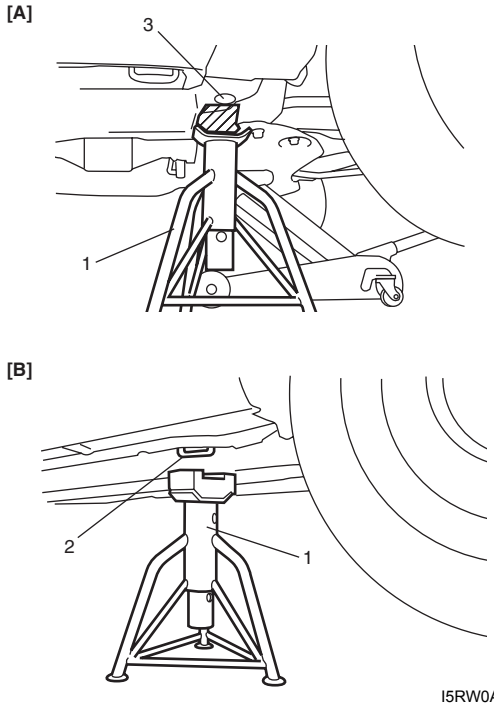

I5RW0A010003-03

[A]: Front	3. Cap
[B]: Rear	

Vehicle Identification Number

S7RW0A0101006

The number is punched on the front dash panel in engine room and it is also attached on the left side of instrument panel depending on the vehicle specification.

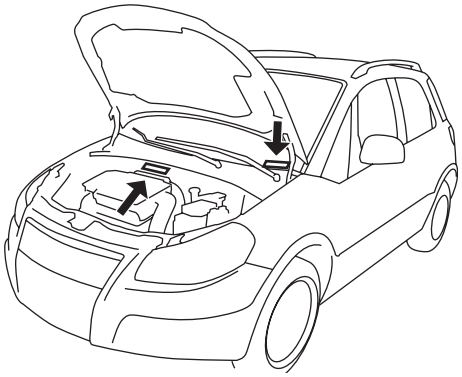

I5RW0C010002-01

Engine Identification Number

S7RW0A0101007

The number is punched on cylinder block.

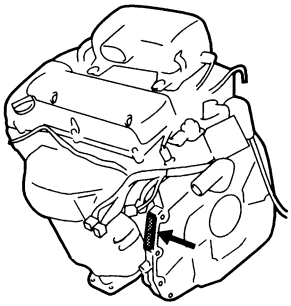

I3RM0A010005-01

Transmission Identification Number

S7RW0A0101008

The automatic transmission identification number is located on transmission case.

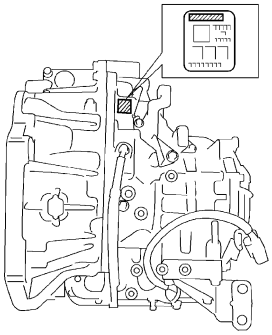

I4RS0A010008-01

Component Location

Warning, Caution and Information Labels Location

S7RW0A0103001

The figure shows main labels among others that are attached to vehicle component parts.
When servicing and handling parts, refer to WARNING / CAUTION instructions printed on labels.
If any WARNING / CAUTION label is found stained or damaged, clean or replace it as necessary.

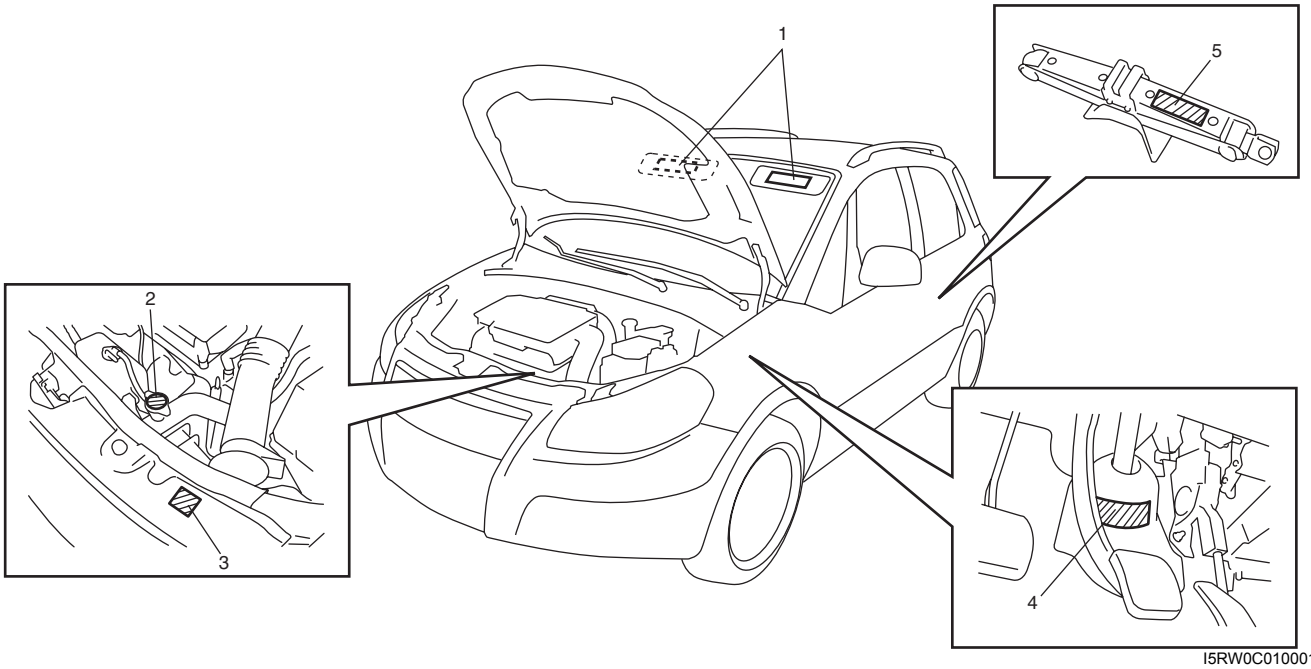

I5RW0C010001-02

1. Air bag label on sun visor (if equipped)	4. Steering shaft joint cover label (if equipped)
2. Radiator cap label	5. Jack label
3. Engine cooling fan label	

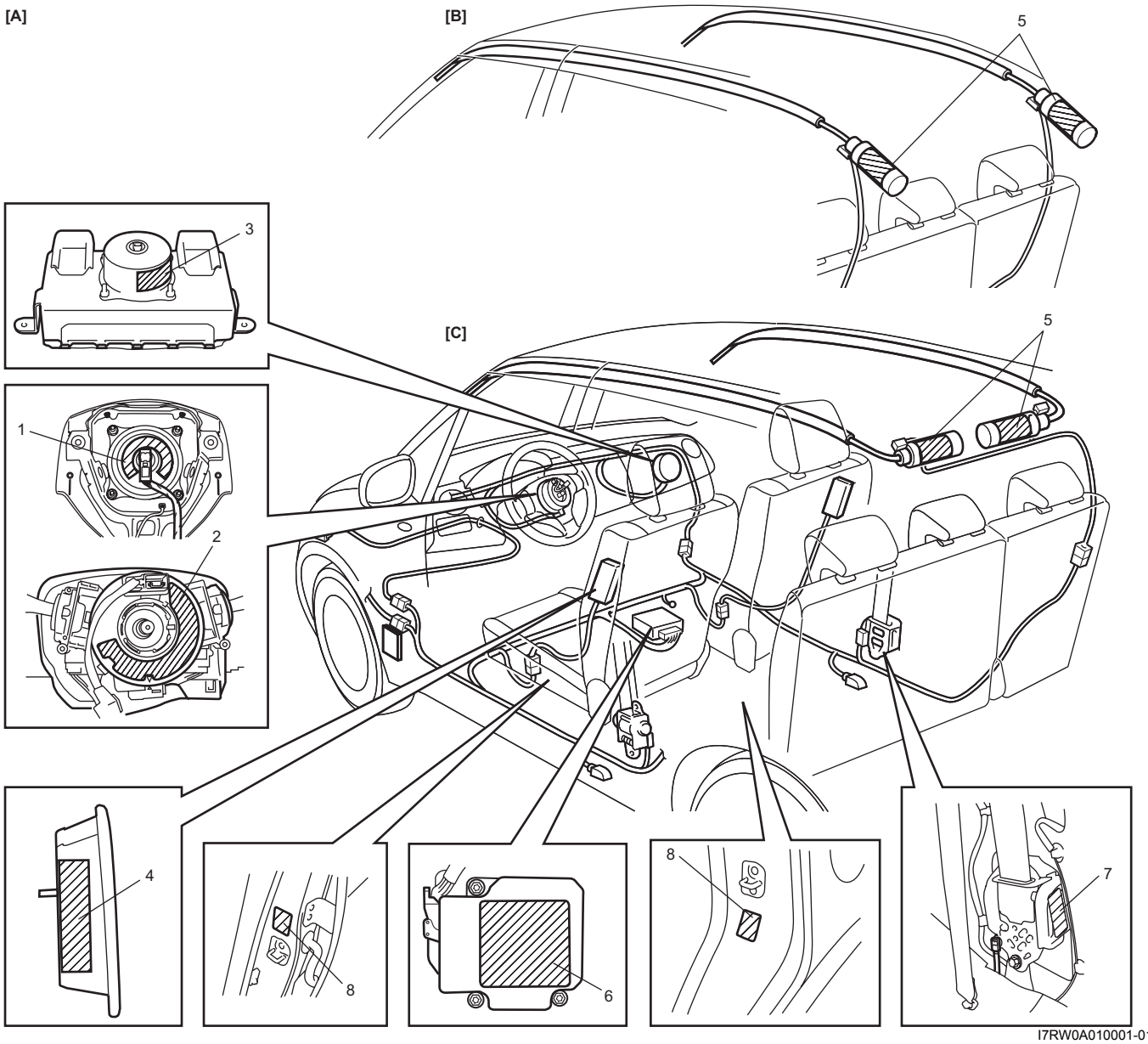

I7RW0A010001-01

1. Air bag label on driver air bag (inflator) module	7. Pretensioner label on seat belt retractor
2. Air bag label on contact coil assembly	8. Side/Curtain air bag label on pillar (both right and left sides) (if equipped)
3. Air bag label on passenger air bag (inflator) module	[A]: These labels are attached on vehicle equipped with air bag system only.
4. Air bag label on side air bag (inflator) module (if equipped)	[B]: Sedan model
5. Air bag label on curtain air bag (inflator) module (if equipped)	[C]: Hatchback model
6. Air bag label on SDM	

Maintenance and Lubrication

Precautions

Precautions for Maintenance and Lubrication

S7RW0A0200001

Air Bag Warning

Refer to “Air Bag Warning in Section 00”.

Scheduled Maintenance

Maintenance Schedule under Normal Driving Conditions

S7RW0A0205001

NOTE

- **This interval should be judged by odometer reading or months, whichever comes first.**
- **This table includes service as scheduled up to 90,000 km (54,000 miles) mileage. Beyond 90,000 km (54,000 miles), carry out the same services at the same intervals respectively.**
- **This table shows the typical maintenance schedule.**
  The actual maintenance schedule, however, varies depending on vehicle specifications and such typical maintenance schedule may not be applicable to some models.
  Therefore, for the maintenance schedule specifically applicable to the vehicle being serviced, follow instructions in the “Periodic Maintenance Schedule” section of the Owner's Manual.

Interval									
			Km (x 1,000)	**15**	**30**	**45**	**60**	**75**	**90**
			Miles (x 1,000)	**9**	**18**	**27**	**36**	**45**	**54**
			Months	**12**	**24**	**36**	**48**	**60**	**72**
Engine									
Accessory drive belt (I: ☞, R: ☞)				—	—	I	—	—	R
Valve lash (clearance) (I: ☞)				—	I	—	I	—	I
Engine oil and oil filter (R: ☞)				R	R	R	R	R	R
Engine coolant (R: ☞)				—	—	R	—	—	R
Exhaust system (I: ☞)				—	I	—	I	—	I
Ignition system									
Spark plugs (R: ☞)	When unleaded fuel is used	Vehicle with HO2S	Nickel spark plug	—	—	R	—	—	R
			Iridium spark Plug (Highly recommended)	Replace every 105,000 km (63,000 miles) or 84 months					
		Vehicle without HO2S	Nickel spark plug	—	R	—	R	—	R
			Iridium spark Plug (If available)	—	—	—	R	—	—
	When leaded fuel is used, refer to “Maintenance Recommended under Severe Driving Conditions”.								
Fuel system									
Air cleaner filter (R: ☞, I: ☞)			Paved-road	I	I	R	I	I	R
			Dusty conditions	Refer to “Maintenance Recommended under Severe Driving Conditions”.					
Fuel lines and connections (I: ☞)				—	I	—	I	—	I
Fuel filter (see NOTE below) (R: ☞)				Replace every 105,000 km (63,000 miles)					
Fuel tank (I: ☞)				—	—	I	—	—	I
Emission control system									
PCV valve (I: ☞)		Vehicle with HO2S		—	—	—	—	—	I
		Vehicle without HO2S		—	—	I	—	—	I
Fuel evaporative emission control system (I: ☞)				—	—	—	—	—	I
Brake									
Brake discs and pads (thickness, wear, damage) (I: ☞)				I	I	I	I	I	I
Brake drums and shoes (wear, damage) (I: ☞)				—	I	—	I	—	I
Brake hoses and pipes (leakage, damage, clamp) (I: ☞)				—	I	—	I	—	I
Brake fluid (R: ☞)				—	R	—	R	—	R

Interval	Km (x 1,000)	15	30	45	60	75	90
	Miles (x 1,000)	9	18	27	36	45	54
	Months	12	24	36	48	60	72
Brake lever and cable (damage, stroke, operation) (I: ☞)		Inspect at first 15,000 km (9,000 miles only					
Chassis and body							
Clutch pedal (travel) Clutch fluid (leakage, level) (I:☞ /☞)		—	I	—	I	—	I
Tires (wear, damage, rotation) / wheels (damage) (I: ☞ / ☞)		I	I	I	I	I	I
Suspension system (tightness, damage, rattle, breakage) (I: ☞)		—	I	—	I	—	I
Steering system (tightness, damage, breakage, rattle) (I: ☞)		—	I	—	I	—	I
Drive shaft (axle) boots / Propeller shaft (4WD) (I: ☞) (I: ☞)		—	—	I	—	—	I
Manual transaxle oil (leakage, level) (I: ☞ 1st 15,000 km only) (R: ☞)		I	—	R	—	—	R
Automatic transaxle fluid	Fluid level (I: ☞)	—	I	—	I	—	I
	Fluid change (R: ☞)	Replace every 165,000 km (99,000 miles)					
	Fluid hose (i: ☞)	—	—	—	I	—	—
Transfer oil (4WD) (leakage, level) (I: ☞)		I	—	I	—	I	—
Rear differential oil (4WD) (leakage, level) (I: ☞) (R: ☞ 1st 15,000 km only)		R or I	—	I	—	I	—
All latches, hinges and locks (I: ☞)		—	I	—	I	—	I
HVAC air filter (if equipped) (I: ☞) (R: ☞)		—	I	R	—	I	R

NOTE

- **"R": Replace or change**
- **"I": Inspect and correct, replace or lubricate if necessary**
- **For nickel spark plugs, replace every 50,000 km if the local law requires.**
- **Nickel spark plug: BKR6E-11 (NGK) or K20PR-U11 (DENSO)**
- **Iridium spark plug: IFR6J11 (NGK)**
- **Periodic replacement of fuel filter is not necessary if it is not instructed in "Periodic Maintenance Schedule" section of the Owner's manual. The scheduled maintenance varies depending on the vehicle specification.**

Maintenance Recommended under Severe Driving Conditions

S7RW0A0205002

If the vehicle is usually used under the conditions corresponding to any severe condition code given below, IT IS RECOMMENDED that applicable maintenance operation be performed at the particular interval as shown in the following table.

Severe condition code:

A: Repeated short trips
B: Driving on rough and/or muddy roads
C: Driving on dusty roads
D: Driving in extremely cold weather and/or salted roads
E: Repeated short trips in extremely cold weather
F: Leaded fuel use
G: – – – – –
H: Towing a trailer (if admitted)

NOTE

This table shows the typical maintenance schedule.
The actual maintenance schedule, however, varies depending on vehicle specifications and such typical maintenance schedule may not be applicable to some models.
Therefore, for the maintenance schedule specifically applicable to the vehicle being serviced, follow instructions in the "Periodic Maintenance Schedule" section of the Owner's Manual.

Severe condition code	Maintenance		Maintenance operation	Maintenance interval
– B C D – – – –	Accessory drive belt		☞ I	Every 15,000 km (9,000 miles) or 12 months
			☞ R	Every 45,000 km (27,000 miles) or 36 months
A – C D E F – H	Engine oil and oil filter		☞ R	Every 7,500 km (4,500 miles) or 6 months
– – C – – – – –	Air cleaner filter *1		☞ I	Every 2,500 km (1,500 miles)
			☞ R	Every 30,000 km (18,000 miles) or 24 months
A B C – E F – H	Spark plugs	Nickel plug	☞ R	Every 10,000 km (6,000 miles) or 8 months
		Iridium plug (Highly recommended)		Every 30,000 km (18,000 miles) or 24 months
– B C D – – – H	Wheel bearings		☞ I	Every 15,000 km (9,000 miles) or 12 months
– B – D E – – H	Drive shaft boots / Propeller shaft (4WD)		☞ / ☞ I	Every 15,000 km (9,000 miles) or 12 months
– B – – E – – H	Manual transaxle oil Transfer oil (4WD) Differential oil (4WD)		☞ / ☞ / ☞ R	First time only: 15,000 km (9,000 miles) or 12 months
				Second time and after: Every 30,000 km (18,000 miles) or 24 months reckoning from 0 km (0 mile) or 0 month
– B – – E – – H	Automatic transaxle fluid		☞R	Every 30,000 km (18,000 miles) or 24 months
– – C D – – – –	HVAC air filter (if equipped) *2		☞ I	Every 15,000 km (9,000 miles) or 12 months
			☞ R	Every 45,000 km (27,000 miles) or 36 months

NOTE

- **"I": Inspect and correct or replace if necessary**
- **"R": Replace or change**
- ***1: Inspect or replace more frequently if the vehicle is used under dusty conditions.**
- ***2: Clean or replace more frequently if the air from the air conditioning decreases.**

Repair Instructions

Accessory Drive Belt Inspection

S7RW0A0206001

⚠ WARNING

All inspection and replacement are to be performed with ENGINE NOT RUNNING.

Water Pump and Generator Drive Belt

Inspect belt for cracks, cuts, deformation, wear and cleanliness. If any defect exists, replace.
Check belt for tension referring to "Water Pump / Generator Drive Belt Tension Inspection and Adjustment in Section 1J".

A/C Compressor Drive Belt (If Equipped)

Inspect belt for cracks, cuts, deformation, wear and cleanliness. If any defect exists, replace.
Check belt for tension referring to "Compressor Drive Belt Inspection and Adjustment: Manual Type in Section 7B" or "Compressor Drive Belt Inspection and Adjustment: Automatic Type in Section 7B".

Accessory Drive Belt Replacement

S7RW0A0206002

Water Pump and Generator Drive Belt

Replace belt with new one referring to “Water Pump / Generator Drive Belt Removal and Installation in Section 1J”.

A/C Compressor Drive Belt (If Equipped)

Replace belt with new one referring to “Compressor Drive Belt Removal and Installation: Manual Type in Section 7B” or “Compressor Drive Belt Removal and Installation: Automatic Type in Section 7B”.

Valve Lash (Clearance) Inspection

S7RW0A0206003

Inspect intake and exhaust valve lash and adjust as necessary.
Refer to “Valve Lash (Clearance) Inspection in Section 1D” for valve lash inspection and adjustment procedure.

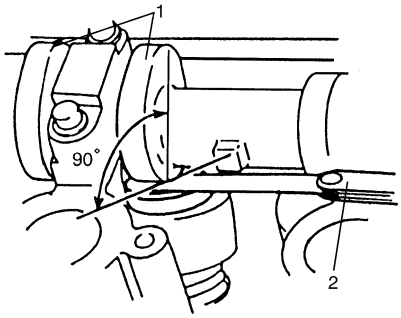

I2RH0B020003-02

1. Camshaft	2. Thickness gauge

Engine Oil and Filter Change

S7RW0A0206004

⚠ WARNING

- **New and used engine oil can be hazardous.**
  Be sure to read “WARNING” in “General Precautions in Section 00” and observe what is written there.
- **Step 1) – 7) outlined below must be performed with ENGINE NOT RUNNING.**
  For Step 8), be sure to have adequate ventilation while engine is running.

Before draining engine oil, check engine for oil leakage. If any evidence of leakage is found, make sure to correct defective part before proceeding to the following work.

1) Drain engine oil by removing drain plug.
2) After draining oil, wipe drain plug clean. Reinstall drain plug.

   Tightening torque
   Engine oil drain plug (a): 35 N·m (3.5 kgf-m, 25.5 lb-ft)

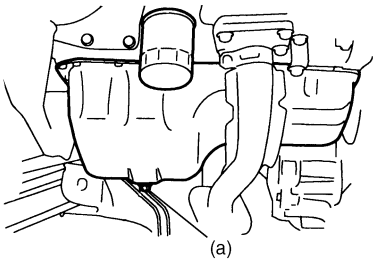

I2RH0B020004-01

3) Loosen oil filter by using oil filter wrench (special tool).

   Special tool
   (A): 09915–47331

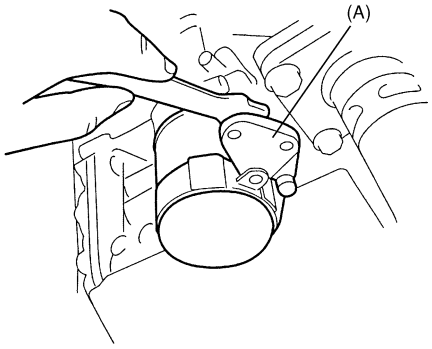

I2RH0B020005-01

NOTE

Before fitting new oil filter, be sure to oil its O-ring. Use engine oil for this purpose.

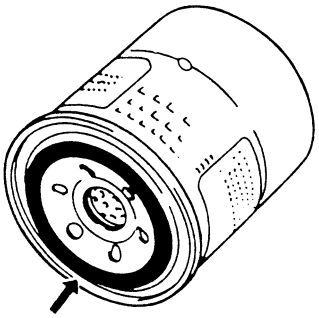

IYSQ01020009-01

4) Screw new filter on oil filter stand by hand until the filter O-ring contacts mounting surface.

⚠ CAUTION

To tighten oil filter properly, it is important to accurately identify the position at which filter O-ring first contacts mounting surface.

5) Tighten the filter (1) 3/4 turn from the point of contact with the mounting surface using an oil filter wrench (2).

Tightening torque
Oil filter (b): 14 N·m (1.4 kgf-m, 10.5 lb-ft) for reference

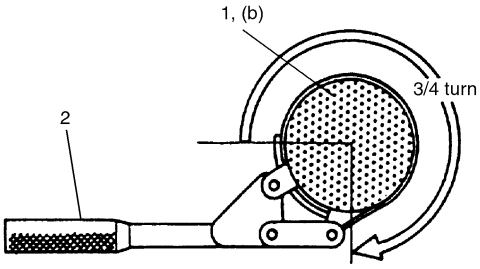

IYSQ01020010-01

6) Replenish oil until oil level is brought to FULL level mark on dipstick (oil pan and oil filter capacity). The filler inlet is at the top of the cylinder head cover. It is recommended to use engine oil of SG, SH, SJ, SL or SM grade. Select the appropriate oil viscosity according to the proper engine oil viscosity chart [A].

NOTE

- **Engine oil capacity is specified as the following.**
  However, note that the amount of oil required when actually changing oil may somewhat differ from the data depending on various conditions (temperature, viscosity, etc.).
- **The specified engine oil and "proper engine oil viscosity chart [A]" included in this manual are given as typical ones.**
  The actual engine oil and proper engine oil viscosity, however, vary depending on the vehicle specifications and such typical chart may not be applicable to some models.
  Therefore, for the specific information on the engine oil and proper engine oil viscosity, refer to "Engine Oil and Filter" section of the Owner's Manual.

Engine oil specification
Oil pan capacity: About 3.7 liters (7.8 / 6.5 US / Imp pt.)
Oil filter capacity: About 0.2 liter (0.4 / 0.3 US / Imp pt.)
Others: About 0.3 liter (0.6 / 0.5 US / Imp pt.)
Total: About 4.2 liters (8.9 / 7.4 US / Imp pt.)

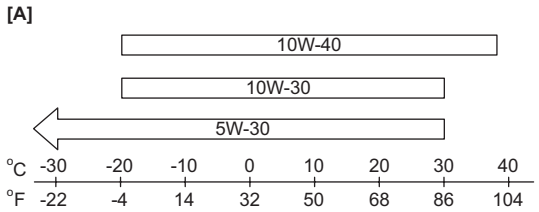

I7RW0A020001-01

7) Check oil filter and drain plug for oil leakage.
8) Start engine and run it for 3 minutes. Stop it and wait another 5 minutes before checking oil level. Add oil, as necessary, to bring oil level to FULL level mark (1) on dipstick.

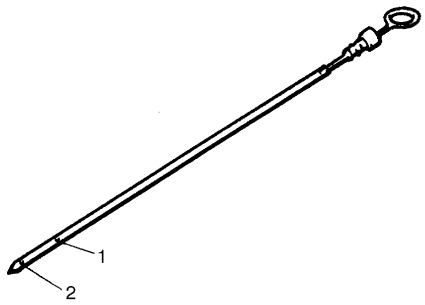

IYSQ01020012-01

2. Low level mark (hole)

Engine Coolant Change

S7RW0A0206005

Change engine coolant with new one referring to "Cooling System Flush and Refill in Section 1F".

Exhaust System Inspection

S7RW0A0206006

⚠ WARNING

To avoid danger of being burned, do not touch exhaust system when it is still hot. Any service on exhaust system should be performed when it is cool.

When carrying out periodic maintenance, or the vehicle is raised for other service, check exhaust system as follows:

- Check rubber mountings for damage, deterioration, and out of position.
- Check exhaust system for leakage, loose connections, dents and damages.
  If bolts or nuts are loose, tighten them to specification.
- Check nearby body areas for damaged, missing or mispositioned parts, open seams, holes, loose connections or other defects which could permit exhaust fumes to seep into the vehicle.
- Make sure that exhaust system components have enough clearance from the underbody to avoid overheating and possible damage to floor carpet.

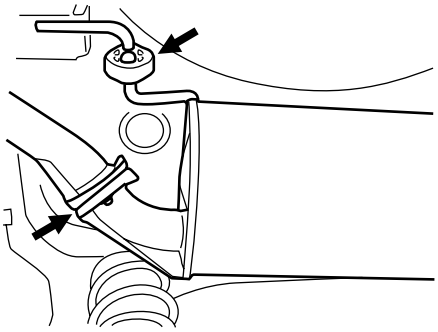

I4RS0A020003-01

- Any defects should be fixed at once.

Spark Plug Replacement

S7RW0A0206007

Replace spark plugs with new ones referring to “Spark Plug Removal and Installation in Section 1H”.

Air Cleaner Filter Inspection

S7RW0A0206008

1) Remove air cleaner case clamps.
2) Take air cleaner filter out of case.
3) Check that filter is not excessively dirty, damaged or oily, clean filter with compressed air from air outlet side of filter.

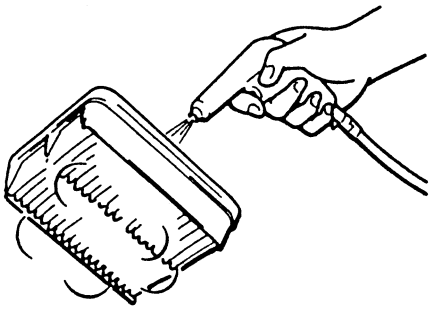

I2RH01140007-01

4) Install air cleaner filter and clamp cap securely.

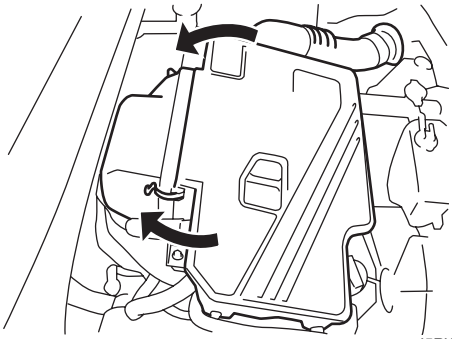

I5RW0A020001-01

Air Cleaner Filter Replacement

S7RW0A0206009

Replace air cleaner filter with new one according to “Air Cleaner Filter Removal and Installation in Section 1D”.

Fuel Lines and Connections Inspection

S7RW0A0206010

Visually inspect fuel lines and connections for evidence of fuel leakage, hose cracking and damage. Make sure all clamps are secure.
Repair leaky joints, if any.
Replace hoses that are suspected of being cracked.

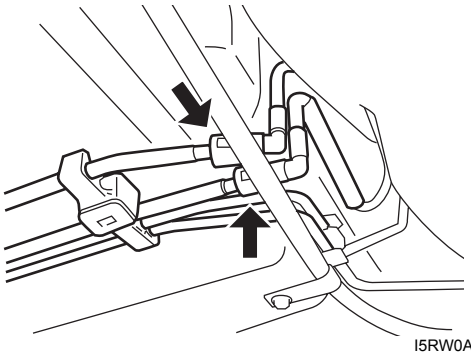

I5RW0A020002-01

Fuel Filter Replacement

S7RW0A0206011

Fuel filter is installed in fuel pump assembly in fuel tank. Replace fuel filter or fuel pump assembly with new one, referring to “Fuel Pump Assembly Removal and Installation in Section 1G” for proper procedure.

Fuel Tank Inspection

S7RW0A0206012

Check fuel tank damage, cracks, fuel leakage, corrosion and tank bolts looseness.
If a problem is found, repair or replace.

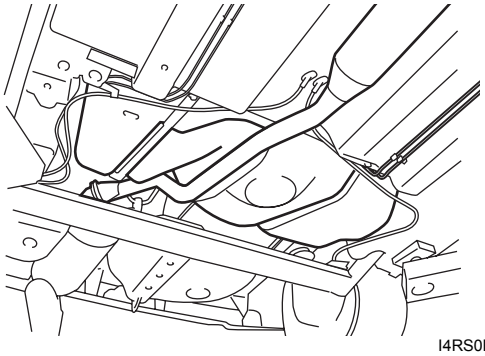

I4RS0B020002-02

PCV Valve Inspection

S7RW0A0206013

Check crankcase ventilation hose and PCV hose for leaks, cracks or clog, and PCV valve for stick or clog. Refer to “PCV Valve Inspection in Section 1B” for PCV valve checking procedure.

Fuel Evaporative Emission Control System Inspection

S7RW0A0206014

1) Visually inspect hoses for cracks, damage, or excessive bends. Inspect all clamps for damage and proper position.
2) Check EVAP canister for operation and clog, referring to “EVAP Canister Inspection in Section 1B”.
   If a malfunction is found, repair or replace.

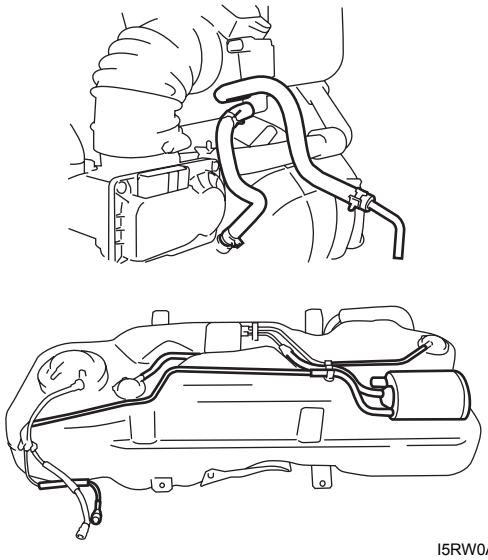

I5RW0A020003-01

Brake Discs and Pads (Front) Inspection

S7RW0A0206015

1) Remove wheel and caliper but don’t disconnect brake hose from caliper.
2) Check front disc brake pads and discs for excessive wear, damage and deflection. Replace parts as necessary. For details, refer to “Front Disc Brake Pad Inspection in Section 4B” and “Front Brake Disc Inspection in Section 4B”.
   Be sure to torque caliper pin bolts to specification.

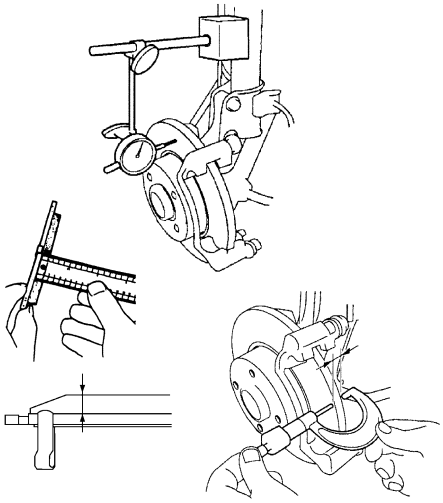

I3RM0A020006-01

Brake Drums and Shoes (Rear) Inspection

S7RW0A0206016

1) Remove wheel and brake drum.
2) Check rear brake drums and brake linings for excessive wear and damage, while wheels and drums are removed. At the same time, check wheel cylinders for leaks. Replace these parts as necessary.
   For details, refer to “Rear Brake Drum and Shoe Inspection in Section 4C”.

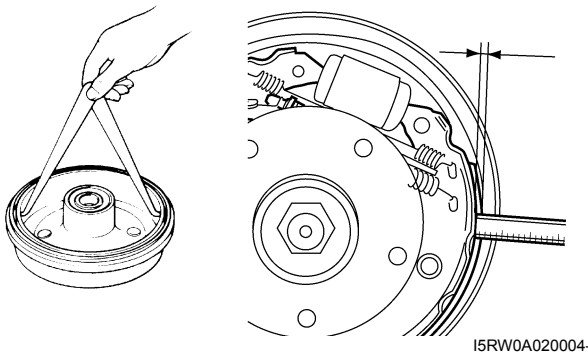

I5RW0A020004-01

Brake Hoses and Pipes Inspection

S7RW0A0206017

Perform this inspection where these is enough light and use a mirror as necessary.

- Check brake hoses and pipes for proper hookup, leaks, cracks, chafing and other damage.
- Check that hoses and pipes are clear of sharp edges and moving parts.

Repair or replace any of these parts as necessary.

⚠ CAUTION

After replacing any brake pipe or hose, be sure to carry out air purge operation.

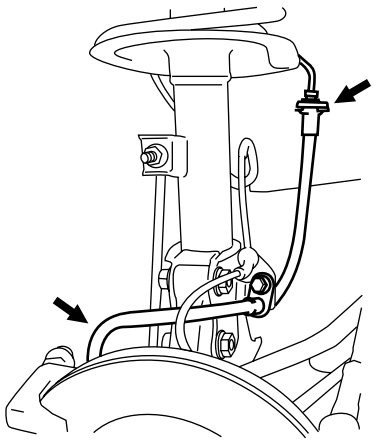

I4RS0A020008-01

Brake Fluid Replacement

S7RW0A0206018

Change brake fluid as follows.
Drain existing fluid from brake system completely, fill system with specified fluid and carry out air purge operation.
For air purging procedure, refer to “Air Bleeding of Brake System in Section 4A”.

Brake Lever and Cable Inspection

S7RW0A0206019

1) Inspect brake cable for damage and smooth movement.
   Replace cable if it is in deteriorated condition.

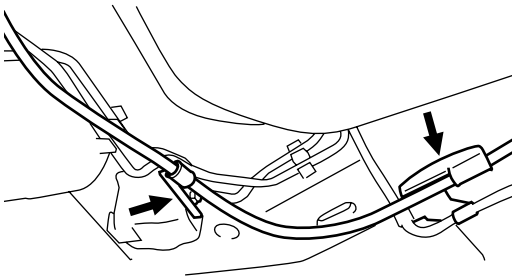

I4RS0A020009-01

2) Check tooth tip of each notch for damage or wear. If any damage or wear is found, replace parking lever.
3) Check parking brake lever for proper operation and stroke, and adjust it if necessary.
   For checking and adjusting procedures, refer to “Parking Brake Inspection and Adjustment in Section 4D”.

Parking brake lever stroke
“a”: 4 – 9 notches (with 200 N (20 kg, 44 lbs) of pull pressure)

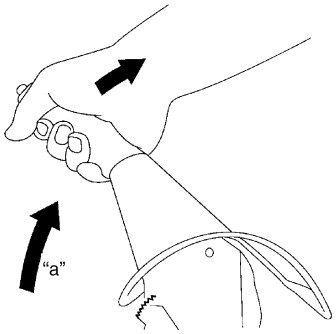

I4RS0B020005-01

Clutch Pedal Inspection

S7RW0A0206041

Check clutch pedal travel.
For checking procedure, refer to “Clutch Pedal Inspection in Section 5C”.

Clutch Fluid Inspection

S7RW0A0206020

1) Check clutch system for evidence of fluid leakage. Repair leaky point if any.
2) Check reservoir for fluid level referring to “Clutch Fluid Level Inspection in Section 5C”.
   If fluid is lower than minimum level (1) of reservoir, refill reservoir with specified brake fluid indicated on reservoir cap (2).

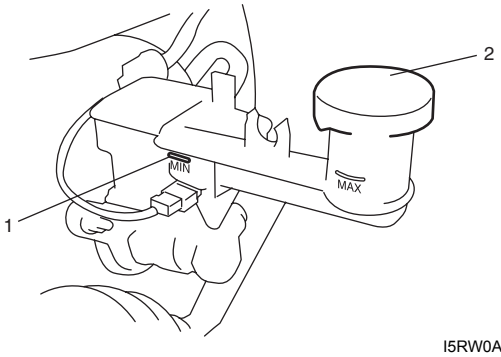

I5RW0A020005-01

Tires Inspection

S7RW0A0206021

1) Check tires for uneven or excessive wear, or damage. If defective, replace.
   Refer to “Irregular and/or Premature Wear Description in Section 2D” and “Wear Indicators Description in Section 2D” for details.

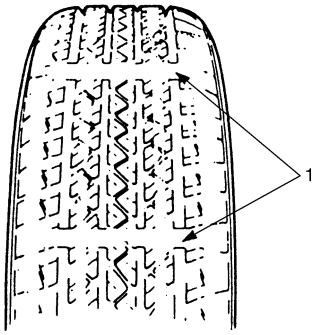

I2RH01020022-01

1.	Wear indicator

2) Check inflating pressure of each tire and adjust pressure to specification as necessary.

NOTE

- **Tire inflation pressure should be checked when tires are cool.**
- **Specified tire inflation pressure should be found on tire placard or in owner’s manual which came with the vehicle.**

3) Rotate tires. For details, refer to “Tire Rotation in Section 2D”.

Wheel Discs Inspection

S7RW0A0206022

Inspect each wheel disc for dents, distortion and cracks. A disc in badly damaged condition must be replaced.

Wheel Bearing Inspection

S7RW0A0206023

1) Check front wheel bearing for wear, damage, abnormal noise or rattles. For details, refer to “Front Wheel Bearing and Wheel Hub Inspection in Section 2B”.
2) Check rear wheel bearing for wear, damage, abnormal noise or rattles. For details, refer to “Rear Wheel Hub Assembly Inspection in Section 2C”.

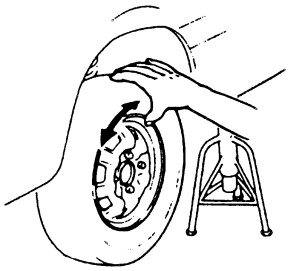

I2RH01020023-01

Suspension System Inspection

S7RW0A0206024

- Inspect front struts and rear shock absorbers for evidence of oil leakage, dents or any other damage on sleeves; and inspect anchor ends for deterioration. Replace defective parts, if any.
- Check front and rear suspension systems for damaged, loose or missing parts; also for parts showing signs of wear or lack of lubrication. Repair or replace defective parts, if any.

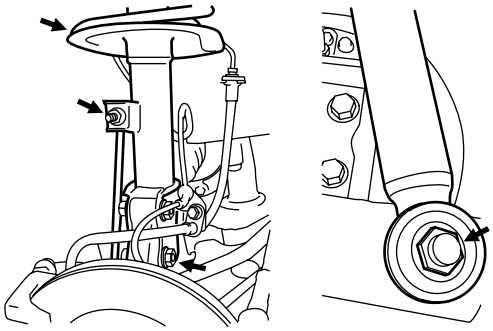

I4RS0A020011-01

- Check front suspension arm ball joint stud dust seals for leakage, detachment, tear or any other damage. Replace defective boot, if any.

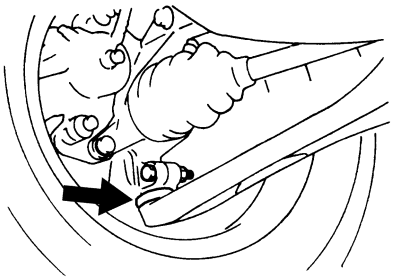

I4RS0A020012-01

Steering System Inspection

S7RW0A0206025

1) Check steering wheel for play and rattle, holding vehicle straight on ground.

<u>Steering wheel play</u>
“a”: 0 – 30 mm (0 – 1.1 in.)

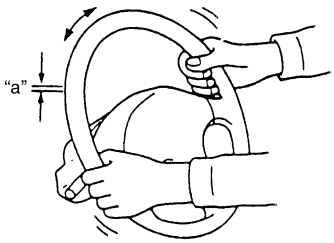

I2RH01020026-01

2) Check bolts and nuts for tightness and retighten them as necessary. Repair or replace defective parts, if any.
3) Check steering linkage for looseness and damage. Repair or replace defective parts, if any.
4) Check boots (1) and (2) of steering linkage and steering gear case for damage (leak, detachment, tear, etc.). If damage is found, replace defective boot with new one.
   If any dent is found on steering gear case boots, correct it to original shape by turning steering wheel to the right or left as far as it stops and holding it for a few seconds.
5) Check universal joints (3) of steering shaft for rattle and damage. If rattle or damage is found, replace defective part with a new one.

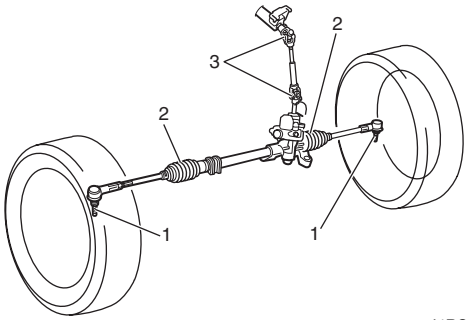

I4RS0B020007-01

6) Check that steering wheel can be turned fully to the right and left. Repair or replace defective parts, if any.
7) If equipped with power steering system, check also, in addition to check items, that steering wheel can be turned fully to the right and left more lightly when engine is running at idle speed than when it is stopped. Repair, if found faulty.
8) Check wheel alignment referring to “Front Wheel Alignment Inspection and Adjustment in Section 2B”.

Drive Shaft (Axle) Boots Inspection

S7RW0A0206026

Check drive shaft boots (wheel side and differential side) for leaks, detachment, tear or other damage.
Replace defective parts as necessary.

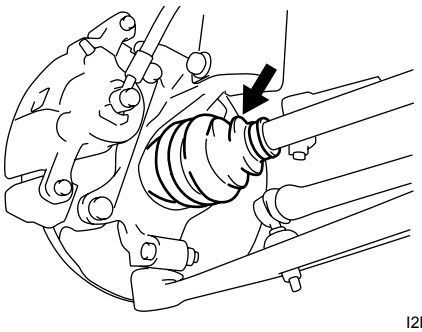
I2RH01310001-01

Propeller Shaft (4WD) Inspection

S7RW0A0206027

1) Check propeller shaft connecting bolts for looseness. If looseness is found, tighten to specified torque.
2) Check propeller shaft joints for wear, play and damage. If any defect is found, replace.
3) Check propeller shaft center support for biting of foreign matter, crank, abnormal noise and damage. If any defect is found, replace.

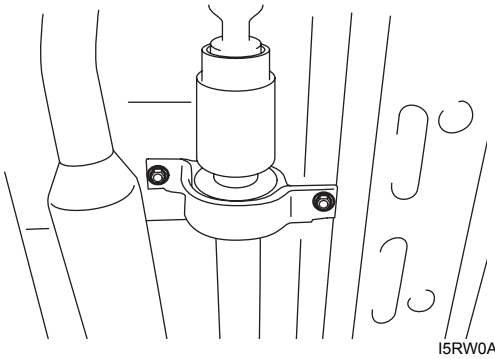
I5RW0A020006-01

Manual Transaxle Oil Inspection

S7RW0A0206028

Check transaxle oil for leakage, contamination and level referring to “Manual Transaxle Oil Level Check in Section 5B”.

Manual Transaxle Oil Replacement

S7RW0A0206029

Change transaxle oil with new specified oil referring to “Manual Transaxle Oil Change in Section 5B”.

Automatic Transaxle Fluid Level Inspection

S7RW0A0206030

Check fluid for leakage, contamination and level referring to“A/T Fluid Level Check in Section 5A”.

Automatic Transaxle Fluid Replacement

S7RW0A0206031

Change fluid referring to “A/T Fluid Change in Section 5A”.

Automatic Transaxle Fluid Cooler Hose Inspection

S7RW0A0206032

Check automatic transaxle fluid cooler hose for fluid leakage, cracks, damage and deterioration. Replace hose and/or clamp if any faulty condition is found.

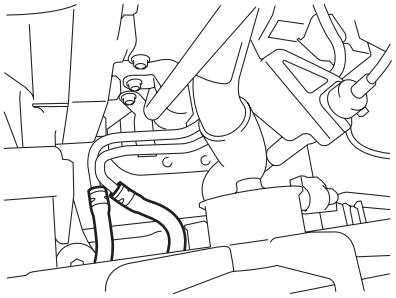
I5RW0C020001-01

Transfer Oil Inspection (4WD)

S7RW0A0206033

Check transfer oil for leakage, contamination and level referring to “Transfer Oil Level Check in Section 3C”.

Transfer Oil Replacement (4WD)

S7RW0A0206034

Change transfer oil with new specified oil referring to “Transfer Oil Change in Section 3C”.

Rear Deferential Oil Inspection (4WD)

S7RW0A0206035

Check differential oil for leakage, contamination and level referring to “Rear Differential Oil Level Check in Section 3B”.

Rear Deferential Oil Replacement (4WD)

S7RW0A0206036

Change differential oil with new specified oil referring to “Rear Differential Oil Change in Section 3B”.

All Latches, Hinges and Locks Inspection

S7RW0A0206037

Doors

Check that each door of front, rear and back doors opens and closes smoothly and locks securely when closed.

If any malfunction is found, lubricate hinge and latch or repair door lock system.

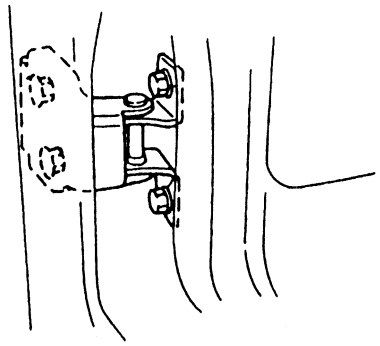

I2RH01020033-01

Engine Hood

Check that secondary latch operates properly (check that secondary latch keeps hood from opening all the way even when pulling hood release handle inside vehicle.) Also check that hood opens and closes smoothly and properly and hood locks securely when closed.

If any malfunction is found, lubricate hinge and latch, or repair hood lock system.

HVAC Air Filter (If Equipped) Inspection

S7RW0A0206038

Check HVAC air filter for dirt and dust referring to “HVAC Air Filter Inspection (If Equipped) in Section 7A”. If air filter is dirty, clean or replace air filter with new one.

HVAC Air Filter (If Equipped) Replacement

S7RW0A0206039

Replace HVAC air filter with new one referring to “HVAC Air Filter Removal and Installation (If Equipped) in Section 7A”.

Final Inspection for Maintenance Service

S7RW0A0206040

⚠ WARNING

When carrying out road tests, select a safe place where no man or no running vehicle is seen so as to prevent any accident.

Seats

Check that seat slides smoothly and locks securely at any position. Also check that reclining mechanism of front seat back allows it to be locked at any angle.

Seat Belt

Inspect belt system including webbing, buckles, latch plates, retractors and anchors for damage or wear. Check that seat belt is securely locked. If “REPLACE BELT” label on seat belt is visible, replace belt.

Battery Electrolyte Level Check

Check that the electrolyte level of all battery cells is between the upper and lower level lines on the case. If battery is equipped with built-in indicator, check battery condition by the indicator.

Accelerator Pedal Operation

Check that pedal operates smoothly without getting caught or interfered by any other part.

Engine Start

Check engine start for readiness.

⚠ WARNING

Before performing the following check, be sure to have enough room around the vehicle. Then, firmly apply both the parking brake and the regular brakes. Do not use the accelerator pedal. If the engine starts, be ready to turn off the ignition promptly. Take these precautions because the vehicle could move without warning and possibly cause personal injury or property damage.

On automatic transaxle vehicles, try to start the engine in each select lever position. The starting motor should crank only in “P” (Park) or “N” (Neutral).

On manual transaxle vehicles, place the shift lever in “Neutral,” depress clutch pedal fully and try to start.

Exhaust System Check

Check for leakage, cracks or loose supports.

Clutch (for Manual Transaxle)
Check for the following.
- Clutch is completely released when depressing clutch pedal,
- No slipping clutch occurs when releasing pedal and accelerating.
- Clutch itself is free from any abnormal condition.

Gearshift or Select Lever
Check gear shift or select lever for smooth shifting to all positions and for good performance of transaxle in any position.
With automatic transaxle equipped vehicle, also check that shift indicator indicates properly according to which position select lever is shifted to.
With automatic transaxle equipped vehicle, make sure that vehicle is at complete stop when shifting select lever to “P” range position and release all brakes.

Brake
Foot brake
Check the following:
- that brake pedal has proper travel,
- that brake works properly,
- that it is free from noise,
- that vehicle does not pull to one side when brake is applied.
- and that brake do not drag.

Parking brake
Check that lever has proper travel.

⚠ WARNING

With vehicle parked on a fairly steep slope, make sure nothing is in the way downhill to avoid any personal injury or property damage. Be prepared to apply regular brake quickly even if vehicle should start to move.

Check to ensure that parking brake is fully effective when the vehicle is stopped on the safe slope and brake lever is pulled all the way.

Steering
- Check to ensure that steering wheel is free from instability, or abnormally heavy feeling.
- Check that the vehicle does not wander or pull to one side.

Engine
- Check that engine responds readily at all speeds.
- Check that engine is free from abnormal noise and abnormal vibration.

Body, Wheels and Power Transmitting System
Check that body, wheels and power transmitting system are free from abnormal noise and abnormal vibration or any other abnormal condition.

Meters and Gauge
Check that speedometer, odometer, fuel meter, temperature gauge, etc. are operating accurately.

Lights
Check that all lights operate properly.

Windshield Defroster
Periodically check that air comes out from defroster outlet when operating heater or air conditioning.
Set mode control lever to defroster position and fan switch lever to highest position for this check.

Specifications

Tightening Torque Specifications

S7RW0A0207001

Fastening part	Tightening torque			Note
	N·m	kgf-m	lb-ft	
Engine oil drain plug	35	3.5	25.5	☞
Oil filter	14	1.4	10.5	for reference ☞

Reference:
For the tightening torque of fastener not specified in this section, refer to “Fasteners Information in Section 0A”.

Special Tools and Equipment

Recommended Fluids and Lubricants

S7RW0A0208001

Engine oil	SG, SH, SJ, SL or SM grade (Refer to “Engine Oil and Filter Change” for engine oil viscosity.)
Engine coolant (Ethylene glycol base coolant)	“Antifreeze/Anticorrosion coolant”
Brake fluid	Refer to reservoir cap of brake master cylinder.
Manual transaxle oil	Refer to “Manual Transaxle Oil Change in Section 5B”.
Automatic transaxle fluid Transfer oil (4WD)	Refer to “A/T Fluid Change in Section 5A”. Refer to “Transfer Oil Change in Section 3C”.
Rear differential (4WD)	Refer to “Rear Differential Oil Change in Section 3B”.
Door hinges	Engine oil or water resistance chassis grease
Hood latch assembly	Engine oil or water resistance chassis grease
Key lock cylinder	Spray lubricant

Special Tool

S7RW0A0208002

09915–47331 Oil filter wrench ☞ 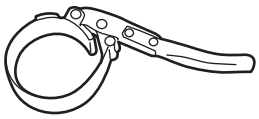	

Section 1

Engine

CONTENTS

Precautions 1-1
Precautions 1-1
Precautions for Engine 1-1

Engine General Information and Diagnosis 1A-1
Precautions 1A-1
Precautions on Engine Service 1A-1
Precaution on On-Board Diagnostic (OBD) System 1A-1
Precautions in Diagnosing Trouble 1A-1
Precautions for DTC Troubleshooting 1A-2
Precautions of ECM Circuit Inspection 1A-2
Precautions of Electric Throttle Body System Calibration 1A-2
Precaution on CAN Troubleshooting 1A-3
General Description 1A-5
Statement on Cleanliness and Care 1A-5
Engine Diagnosis General Description 1A-5
On-Board Diagnostic System Description 1A-5
Data Link Connector (DLC) Description 1A-8
Engine and Emission Control System Description 1A-8
CAN Communication System Description 1A-9
Air Intake System Description 1A-11
Description of Electric Throttle Body System Calibration 1A-11
Electric Throttle Body System Description 1A-11
Electronic Control System Description 1A-12
Engine and Emission Control Input / Output Table 1A-13
Schematic and Routing Diagram 1A-14
ECM Input / Output Circuit Diagram 1A-14
Engine and Emission Control System Flow Diagram 1A-18
Engine and Emission Control System Diagram 1A-19
Component Location 1A-21
Electronic Control System Components Location 1A-21
Diagnostic Information and Procedures 1A-22
Engine and Emission Control System Check 1A-22
Malfunction Indicator Lamp (MIL) Check 1A-25
DTC Check 1A-25
DTC Clearance 1A-26
Troubleshooting for Communication Error with Scan Tool Using CAN 1A-26
DTC Table 1A-32
Fail-Safe Table 1A-36
Scan Tool Data 1A-38
Visual Inspection 1A-43
Engine Basic Inspection 1A-43
Engine Symptom Diagnosis 1A-45
Malfunction Indicator Lamp Does Not Come ON with Ignition Switch ON and Engine Stop (but Engine Can Be Started) 1A-52
Malfunction Indicator Lamp Remains ON after Engine Starts 1A-54
DTC P0010: Camshaft Position Actuator Circuit (for engine with VVT system) 1A-55
DTC P0011 / P0012: Camshaft Position - Timing Over-Advanced or System Performance / Retarded (for engine with VVT system) 1A-57
DTC P0031 / P0032: HO2S Heater Control Circuit Low / High (Sensor-1) 1A-59
DTC P0037 / P0038: HO2S Heater Control Circuit Low / High (Sensor-2) 1A-61
DTC P0101: Mass Air Flow Circuit Range / Performance 1A-63
DTC P0102: Mass Air Flow Circuit Low Input 1A-66
DTC P0103: Mass Air Flow Circuit High Input 1A-67
DTC P0106: Manifold Absolute Pressure Range / Performance 1A-69
DTC P0107: Manifold Absolute Pressure Circuit Low Input 1A-70
DTC P0108: Manifold Absolute Pressure Circuit High Input 1A-72
DTC P0111: Intake Air Temperature Circuit Range / Performance 1A-74
DTC P0112: Intake Air Temperature Sensor Circuit Low 1A-76
DTC P0113: Intake Air Temperature Sensor Circuit High 1A-78
DTC P0116: Engine Coolant Temperature Circuit Range / Performance 1A-80
DTC P0117: Engine Coolant Temperature Circuit Low 1A-83

DTC P0118: Engine Coolant Temperature Circuit High 1A-84
DTC P0122: Throttle Position Sensor (Main) Circuit Low 1A-87
DTC P0123: Throttle Position Sensor (Main) Circuit High 1A-89
DTC P0131 / P0132: O2 Sensor (HO2S) Circuit Low Voltage / High Voltage (Sensor-1) 1A-92
DTC P0133: O2 Sensor (HO2S) Circuit Slow Response (Sensor-1) 1A-95
DTC P0134: O2 Sensor (HO2S) Circuit No Activity Detected (Sensor-1) 1A-96
DTC P0137 / P0138: O2 Sensor (HO2S) Circuit Low Voltage / High Voltage (Sensor-2) 1A-98
DTC P0140: O2 Sensor (HO2S) Circuit No Activity Detected (Sensor-2) 1A-101
DTC P0171 / P0172: Fuel System Too Lean / Rich 1A-103
DTC P0222: Throttle Position Sensor (Sub) Circuit Low 1A-105
DTC P0223: Throttle Position Sensor (Sub) Circuit High 1A-107
DTC P0300 / P0301 / P0302 / P0303 / P0304: Random Misfire Detected / Cylinder 1 / Cylinder 2 / Cylinder 3 / Cylinder 4 Misfire Detected 1A-110
DTC P0327 / P0328: Knock Sensor Circuit Low / High 1A-112
DTC P0335: Crankshaft Position (CKP) Sensor Circuit 1A-114
DTC P0340: Camshaft Position (CMP) Sensor Circuit 1A-116
DTC P0401 / P0402: Exhaust Gas Recirculation Flow Insufficient Detected / Excessive Detected 1A-119
DTC P0403: Exhaust Gas Recirculation Control Circuit 1A-122
DTC P0420: Catalyst System Efficiency below Threshold 1A-124
DTC P0443: Evaporative Emission System Purge Control Valve Circuit 1A-126
DTC P0462 / P0463: Fuel Level Sensor Circuit Low / High 1A-128
DTC P0480: Fan 1 (Radiator Cooling Fan) Control Circuit 1A-129
DTC P0481: Cooling Fan 2 (A/C Condenser Fan) Control Circuit 1A-131
DTC P0500: Vehicle Speed Sensor (VSS) Malfunction 1A-134
DTC P0532: A/C Refrigerant Pressure Sensor Circuit Low 1A-136
DTC P0533: A/C Refrigerant Pressure Sensor Circuit High 1A-138
DTC P0601 / P0602 / P0607: Internal Control Module Memory Check Sum Error / Control Module Programming Error / Control Module Performance 1A-139
DTC P0616: Starter Relay Circuit Low 1A-140
DTC P0617: Starter Relay Circuit High 1A-141
DTC P1510: ECM Back-Up Power Supply Malfunction 1A-143
DTC P2101: Throttle Actuator Control Motor Circuit Range / Performance 1A-144
DTC P2102: Throttle Actuator Control Motor Circuit Low 1A-146
DTC P2103: Throttle Actuator Control Motor Circuit High 1A-147
DTC P2111: Throttle Actuator Control System - Stuck Open 1A-148
DTC P2119: Throttle Actuator Control Throttle Body Range / Performance 1A-149
DTC P2122: Pedal Position Sensor (Main) Circuit Low Input 1A-151
DTC P2123: Pedal Position Sensor (Main) Circuit High Input 1A-153
DTC P2127: Pedal Position Sensor (Sub) Circuit Low Input 1A-155
DTC P2128: Pedal Position Sensor (Sub) Circuit High Input 1A-158
DTC P2135: Throttle Position Sensor (Main / Sub) Voltage Correlation 1A-160
DTC P2138: Pedal Position Sensor (Main / Sub) Voltage Correlation 1A-163
DTC P2227 / P2228 / P2229: Barometric Pressure Circuit Malfunction 1A-165
DTC U0073: Control Module Communication Bus Off 1A-166
DTC U0101: Lost Communication with TCM 1A-166
DTC U0121: Lost Communication with ABS Control Module 1A-166
DTC U0140: Lost Communication with Body Control Module 1A-166
Troubleshooting for CAN-DTC 1A-167
Inspection of ECM and Its Circuits 1A-172
ECM Power and Ground Circuit Check 1A-194
Fuel Injector Circuit Check 1A-197
Fuel Pump and Its Circuit Check 1A-199
Fuel Pressure Check 1A-202
A/C Condenser Cooling Fan Control System Inspection 1A-203
A/C System Circuits Check 1A-206
Electric Load Signal Circuit Check 1A-210
Radiator Cooling Fan Control System Check 1A-212
Repair Instructions 1A-213
Idle Speed and IAC Throttle Valve Opening Inspection 1A-213
Special Tools and Equipment 1A-214
Special Tool 1A-214

Aux. Emission Control Devices 1B-1

Diagnostic Information and Procedures 1B-1
EGR System Inspection (If Equipped) 1B-1
Repair Instructions 1B-1
EVAP Canister Purge Inspection 1B-1
EVAP Canister Purge Valve and Its Circuit Inspection 1B-1
Vacuum Passage Inspection 1B-2

Vacuum Hose Inspection 1B-3
EVAP Canister Purge Valve Inspection 1B-3
EVAP Canister Inspection 1B-4
EGR Valve Removal and Installation (If Equipped) 1B-4
EGR Valve Inspection (If Equipped) 1B-4
PCV Hose Inspection 1B-5
PCV Valve Inspection 1B-5
Special Tools and Equipment 1B-5
Special Tool 1B-5

Engine Electrical Devices 1C-1

Repair Instructions 1C-1
Engine Control Module (ECM) Removal and Installation 1C-1
Manifold Absolute Pressure (MAP) Sensor Inspection (If Equipped) 1C-2
Electric Throttle Body Assembly On-Vehicle Inspection 1C-2
Electric Throttle Body System Calibration 1C-4
Accelerator Pedal Position (APP) Sensor Assembly On-Vehicle Inspection 1C-5
Accelerator Pedal Position (APP) Sensor Assembly Removal and Installation 1C-5
Accelerator Pedal Position (APP) Sensor Assembly Inspection 1C-5
Engine Coolant Temperature (ECT) Sensor Removal and Installation 1C-6
Engine Coolant Temperature (ECT) Sensor Inspection 1C-7
Heated Oxygen Sensor (HO2S-1 and HO2S-2) Heater On-Vehicle Inspection (If Equipped) 1C-7
Heated Oxygen Sensor (HO2S-1 and HO2S-2) Removal and Installation (If Equipped) 1C-7
Camshaft Position (CMP) Sensor Removal and Installation 1C-8
Camshaft Position (CMP) Sensor Inspection 1C-9
Crankshaft Position (CKP) Sensor Removal and Installation 1C-9
Crankshaft Position (CKP) Sensor Inspection 1C-10
Knock Sensor Removal and Installation 1C-10
Main Relay, Fuel Pump Relay, Starting Motor Control Relay, Throttle Actuator Control Relay and Radiator Cooling Fan Relay Inspection 1C-11
Mass Air Flow (MAF) and Intake Air Temperature (IAT) Sensor On-Vehicle Inspection 1C-11
Mass Air Flow (MAF) and Intake Air Temperature (IAT) Sensor Removal and Installation 1C-12
Intake Air Temperature (IAT) Sensor Inspection 1C-12
Specifications 1C-13
Tightening Torque Specifications 1C-13

Engine Mechanical 1D-1

General Description 1D-1
Engine Construction Description 1D-1
Camshaft Position Control (VVT Variable Valve Timing) System Description 1D-3
Diagnostic Information and Procedures 1D-5
Compression Check 1D-5
Engine Vacuum Check 1D-6
Valve Lash (Clearance) Inspection 1D-7
Repair Instructions 1D-10
Air Intake System Components 1D-10
Air Cleaner Filter Removal and Installation 1D-10
Air Cleaner Filter Inspection and Cleaning 1D-10
Air Cleaner Assembly Removal and Installation 1D-11
Cylinder Head Cover Removal and Installation 1D-11
Throttle Body and Intake Manifold Components 1D-13
Throttle Body On-Vehicle Inspection 1D-14
Electric Throttle Body Assembly Removal and Installation 1D-14
Throttle Body Cleaning 1D-14
Intake Manifold Removal and Installation 1D-15
Engine Mountings Components 1D-16
Engine Assembly Removal and Installation 1D-17
Timing Chain Cover Components 1D-22
Timing Chain Cover Removal and Installation 1D-23
Timing Chain Cover Inspection 1D-25
Oil Control Valve Removal and Installation (For Engine with VVT) 1D-26
Oil Control Valve Inspection (For Engine with VVT) 1D-26
Timing Chain and Chain Tensioner Components 1D-27
Timing Chain and Chain Tensioner Removal and Installation 1D-27
Timing Chain and Chain Tensioner Inspection 1D-31
Camshaft, Tappet and Shim Components 1D-32
Camshaft, Tappet and Shim Removal and Installation 1D-33
Camshaft, Tappet and Shim Inspection 1D-36
Valves and Cylinder Head Components 1D-39
Valves and Cylinder Head Removal and Installation 1D-40
Valves and Cylinder Head Disassembly and Assembly 1D-42
Valves and Valve Guides Inspection 1D-45
Cylinder Head Inspection 1D-47
Valve Spring Inspection 1D-48
Pistons, Piston Rings, Connecting Rods and Cylinders Components 1D-48
Pistons, Piston Rings, Connecting Rods and Cylinders Removal and Installation 1D-49
Pistons, Piston Rings, Connecting Rods and Cylinders Disassembly and Assembly 1D-50
Cylinders, Pistons and Piston Rings Inspection 1D-51
Piston Pins and Connecting Rods Inspection 1D-53
Crank Pin and Connecting Rod Bearings Inspection 1D-55
Main Bearings, Crankshaft and Cylinder Block Components 1D-58

Main Bearings, Crankshaft and Cylinder Block Removal and Installation 1D-59
Crankshaft Inspection 1D-62
Main Bearings Inspection 1D-64
Sensor Plate Inspection 1D-68
Rear Oil Seal Inspection 1D-68
Flywheel Inspection 1D-68
Cylinder Block Inspection 1D-68
Specifications 1D-69
Tightening Torque Specifications 1D-69
Special Tools and Equipment 1D-70
Recommended Service Material 1D-70
Special Tool 1D-70

Engine Lubrication System 1E-1

General Description 1E-1
Engine Lubrication Description 1E-1
Diagnostic Information and Procedures 1E-2
Oil Pressure Check 1E-2
Repair Instructions 1E-3
Oil Pan and Oil Pump Strainer Components 1E-3
Oil Pan and Oil Pump Strainer Removal and Installation 1E-4
Oil Pan and Oil Pump Strainer Cleaning 1E-5
Oil Pump Components 1E-6
Oil Pump Removal and Installation 1E-6
Oil Pump Disassembly and Reassembly 1E-6
Oil Pump Inspection 1E-7
Specifications 1E-9
Tightening Torque Specifications 1E-9
Special Tools and Equipment 1E-9
Recommended Service Material 1E-9
Special Tool 1E-9

Engine Cooling System 1F-1

General Description 1F-1
Cooling System Description 1F-1
Coolant Description 1F-1
Schematic and Routing Diagram 1F-2
Coolant Circulation 1F-2
Diagnostic Information and Procedures 1F-3
Engine Cooling Symptom Diagnosis 1F-3
Repair Instructions 1F-4
Cooling System Components 1F-4
Coolant Level Check 1F-5
Engine Cooling System Inspection and Cleaning 1F-5
Cooling System Draining 1F-5
Cooling System Flush and Refill 1F-6
Cooling Water Pipes or Hoses Removal and Installation 1F-6
Thermostat Removal and Installation 1F-7
Thermostat Inspection 1F-7
Radiator Cooling Fan Assembly On-Vehicle Inspection 1F-8
Radiator Cooling Fan Relay Inspection 1F-8
Radiator Cooling Fan Assembly Removal and Installation 1F-8
Radiator Cooling Fan Disassembly and Reassembly 1F-9
Radiator On-Vehicle Inspection and Cleaning 1F-9
Radiator Removal and Installation 1F-9
Water Pump / Generator Drive Belt Tension Inspection and Adjustment 1F-10
Water Pump / Generator Drive Belt Removal and Installation 1F-10
Water Pump Removal and Installation 1F-11
Water Pump Inspection 1F-12
Specifications 1F-12
Tightening Torque Specifications 1F-12
Special Tools and Equipment 1F-12
Recommended Service Material 1F-12

Fuel System 1G-1

Precautions 1G-1
Precautions on Fuel System Service 1G-1
General Description 1G-2
Fuel System Description 1G-2
Fuel Delivery System Description 1G-2
Fuel Pump Description 1G-2
Schematic and Routing Diagram 1G-3
Fuel Delivery System Diagram 1G-3
Diagnostic Information and Procedures 1G-3
Fuel Pressure Inspection 1G-3
Fuel Cut Operation Inspection 1G-4
Repair Instructions 1G-5
Fuel System Components 1G-5
Fuel Hose Disconnecting and Reconnecting 1G-6
Fuel Pressure Relief Procedure 1G-7
Fuel Leakage Check Procedure 1G-8
Fuel Lines On-Vehicle Inspection 1G-8
Fuel Pipe Removal and Installation 1G-8
Fuel Injector On-Vehicle Inspection 1G-9
Fuel Injector Removal and Installation 1G-9
Fuel Injector Inspection 1G-10
Fuel Filler Cap Inspection 1G-12
Fuel Tank Inlet Valve Removal and Installation 1G-12
Fuel Tank Inlet Valve Inspection 1G-12
Fuel Tank Removal and Installation 1G-13
Fuel Tank Inspection 1G-14
Fuel Tank Purging Procedure 1G-15
Fuel Pump On-Vehicle Inspection 1G-15
Fuel Pump Assembly Removal and Installation 1G-15
Main Fuel Level Sensor Removal and Installation 1G-16
Fuel Pump Inspection 1G-17
Specifications 1G-17
Tightening Torque Specifications 1G-17
Special Tools and Equipment 1G-18
Special Tool 1G-18

Ignition System 1H-1

General Description 1H-1
Ignition System Construction 1H-1
Schematic and Routing Diagram 1H-2

Ignition System Wiring Circuit Diagram.....1H-2
Component Location 1H-3
Ignition System Components Location 1H-3
Diagnostic Information and Procedures.....1H-4
Ignition System Symptom Diagnosis.....1H-4
Reference Waveform of Ignition System.....1H-4
Ignition System Check 1H-4
Ignition Spark Test 1H-6
Repair Instructions 1H-6
High-Tension Cord Removal and Installation.....1H-6
High-Tension Cord Inspection 1H-7
Spark Plug Removal and Installation 1H-7
Spark Plug Inspection 1H-7
Ignition Coil Assembly (Including Ignitor) Removal and Installation.....1H-8
Ignition Coil Assembly (Including Ignitor) Inspection.....1H-8
Ignition Timing Inspection 1H-8
Specifications.....1H-9
Tightening Torque Specifications.....1H-9
Special Tools and Equipment.....1H-9
Special Tool 1H-9

Starting System 1I-1

Schematic and Routing Diagram..... 1I-1
Cranking System Circuit Diagram..... 1I-1
Diagnostic Information and Procedures..... 1I-1
Cranking System Symptom Diagnosis..... 1I-1
Cranking System Test..... 1I-3
Repair Instructions 1I-4
Starting Motor Dismounting and Remounting 1I-4
Starting Motor Components 1I-5
Starting Motor Inspection 1I-6
Specifications..... 1I-9
Cranking System Specifications..... 1I-9
Tightening Torque Specifications..... 1I-9
Special Tools and Equipment..... 1I-9
Recommended Service Material..... 1I-9

Charging System 1J-1

General Description 1J-1
Battery Description..... 1J-1
Generator Description 1J-2
Diagnostic Information and Procedures..... 1J-3
Battery Inspection 1J-3
Generator Symptom Diagnosis 1J-4
Generator Test (Undercharged Battery Check)..... 1J-4
Generator Test (Overcharged Battery Check) 1J-5
Repair Instructions 1J-6
Jump Starting in Case of Emergency..... 1J-6
Battery Dismounting and Remounting 1J-6
Water Pump / Generator Drive Belt Tension Inspection and Adjustment..... 1J-7
Water Pump / Generator Drive Belt Removal and Installation 1J-8
Generator Dismounting and Remounting..... 1J-8
Generator Components..... 1J-9
Generator Inspection..... 1J-10
Specifications 1J-12
Charging System Specifications 1J-12
Tightening Torque Specifications..... 1J-12

Exhaust System 1K-1

General Description 1K-1
Exhaust System Description 1K-1
Diagnostic Information and Procedures.....1K-1
Exhaust System Check 1K-1
Repair Instructions 1K-2
Exhaust System Components.....1K-2
Exhaust Manifold Removal and Installation 1K-3
Exhaust Pipe and Muffler Removal and Installation 1K-4
Specifications.....1K-4
Tightening Torque Specifications.....1K-4

Precautions

Precautions

Precautions for Engine

S7RW0A1000001

Air Bag Warning
Refer to “Air Bag Warning in Section 00”.

Precautions on Engine Service
Refer to “Precautions on Engine Service in Section 1A”.

Precautions in Diagnosing Trouble
Refer to “Precautions in Diagnosing Trouble in Section 1A”.

Precautions of ECM Circuit Inspection
Refer to “Precautions of ECM Circuit Inspection in Section 1A”.

Precautions on Fuel System Service
Refer to “Precautions on Fuel System Service in Section 1G”.

Precaution for CAN Communication System
Refer to “Precaution for CAN Communication System in Section 00”.

Precautions for Catalytic Converter
Refer to “Precautions for Catalytic Converter in Section 00”.

Precautions for Electrical Circuit Service
Refer to “Precautions for Electrical Circuit Service in Section 00”.

Engine General Information and Diagnosis

Precautions

Precautions on Engine Service

S7RW0A1100001

⚠ CAUTION

The following information on engine service should be noted carefully, as it is important in preventing damage, and in contributing to reliable engine performance.

- When raising or supporting engine for any reason, do not use a jack under oil pan. Due to small clearance between oil pan and oil pump strainer, jacking against oil pan may cause it to be bent against strainer, resulting in damaged oil pick-up unit.
- It should be kept in mind, while working on engine, that 12-volt electrical system is capable of violent and damaging short circuits.
  When performing any work where electrical terminals can be grounded, ground cable of the battery should be disconnected at battery.
- Any time the air cleaner, throttle body or intake manifold is removed, the intake opening should be covered. This will protect against accidental entrance of foreign material which could follow intake passage into cylinder and cause extensive damage when engine is started.

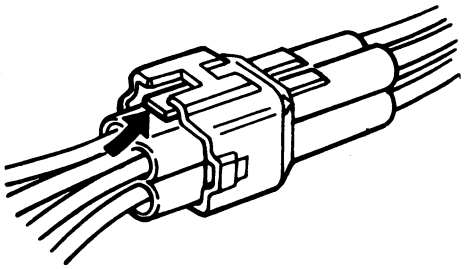

IYSQ01110001-01

Precaution on On-Board Diagnostic (OBD) System

S7RW0A1100002

There are two types of On-Board Diagnostic (OBD) system, Euro OBD system and non-Euro-OBD system, depending on the vehicle specification.
It is possible to identify each OBD system by checking if it is equipped with the HO2S-2 or not.

- Euro OBD model is equipped with HO2S-2.
- Non-Euro-OBD model is not equipped with HO2S-2.

NOTE

For Taiwan model, bear in mind that it is non-Euro-OBD model which is equipped with HO2S-2.

As the diagnosis function is different between these two types, be sure to fully understand the OBD system referring to “On-Board Diagnostic System Description”.

OBD System Summary Table

	Euro OBD model (with HO2S-2)	Non-Euro-OBD model (without HO2S-2)
Quantity of DTC related to engine control	Approx. 100	Approx. 50 to 80
Freeze frame data	Available	Not available
SUZUKI scan tool (SUZUKI- SDT)	Available	Available
CAN communication OBD generic scan tool	Available	Not available

Precautions in Diagnosing Trouble

S7RW0A1100003

NOTE

There are two types of OBD system depending on the vehicle specification.
For identification, refer to “Precaution on On-Board Diagnostic (OBD) System”.

- Don’t disconnect ECM couplers from ECM, battery cable from battery, ECM ground wire harness from engine or main fuse before confirming diagnostic information (DTC, freeze frame data, etc.) stored in ECM memory. Such disconnection will erase memorized information in ECM memory.
- Diagnostic information stored in ECM memory can be cleared as well as checked by using SUZUKI scan tool or CAN communication OBD generic scan tool. Before using scan tool, read its Operator’s (Instruction) Manual carefully to have good understanding as to what functions are available and how to use it.
  For Euro OBD model, it is indistinguishable which module turns on MIL because not only ECM but also TCM (for A/T model) turns on MIL (for details of on-board diagnostic system for A/T model, refer to “On-Board Diagnostic System Description in Section 5A” for A/T).
  Therefore, check both ECM and TCM (for A/T model) for DTC when MIL lights on.

- When checking ECM for DTC, keep in mind that DTC is displayed on the scan tool as follows depending on the scan tool used.
  - SUZUKI scan tool displays DTC detected by ECM.
  - CAN communication OBD generic scan tool displays DTC detected by each of ECM and TCM (for A/T model) simultaneously.
- Priorities for diagnosing troubles
  If two or more DTCs are stored, proceed to the DTC flow which has been detected earliest in the order and follow the instruction in that flow.
  If no instructions are given, troubleshoot DTCs according to the following priorities.
  a. DTCs other than DTC P0171 / P0172 (Fuel system too lean / too rich), DTC P0300 / P0301 / P0302 / P0303 / P0304 (Misfire detected) and DTC P0401 / P0402 (EGR flow malfunction)
  b. DTC P0171 / P0172 (Fuel system too lean / too rich) and DTC P0401 / P0402 (EGR flow malfunction)
  c. DTC P0300 / P0301 / P0302 / P0303 / P0304 (Misfire detected)
- Be sure to read “Precautions for Electrical Circuit Service in Section 00” before inspection and observe what is written there.
- ECM replacement:
  When substituting a known-good ECM, check for the following conditions. Neglecting this check may cause damage to a known-good ECM.
  - Resistance value of all relays, actuators is as specified respectively.
  - MAP sensor, A/C refrigerant pressure sensor (if equipped with A/C), accelerator pedal position (APP) sensor and TP sensor are in good condition and none of power circuits of these sensors is shorted to ground.
- Communication of ECM, BCM, combination meter, keyless start control module (if equipped with keyless start control system), 4WD control module (if equipped), TCM (for A/T model), ABS / ESP® control module, steering angle sensor (ESP® model) and yaw rate / G sensor (ESP® model), is established by CAN (Controller Area Network). (For more detail of CAN communication for ECM, refer to “CAN Communication System Description”). Therefore, handle CAN communication line with care referring to “Precaution for CAN Communication System in Section 00”.
- Immobilizer transponder code registration after replacing ECM (Immobilizer model)
  When ECM is replaced with new one or with another one, make sure to register immobilizer transponder code to ECM correctly according to “Procedure after ECM Replacement in Section 10C”.

Precautions for DTC Troubleshooting

S7RW0A1100004

- Before performed trouble shooting, be sure to read the “Precautions of ECM Circuit Inspection”.
- When measuring circuit voltage, resistance and/or pulse signal at ECM connector, connect the special tool to ECM and/or the ECM connectors referring to “Inspection of ECM and Its Circuits”.
- Upon completion of inspection and repair work, perform “DTC Confirmation Procedure” and confirm that the trouble has been corrected.

Precautions of ECM Circuit Inspection

S7RW0A1100005

- ECM connectors are waterproofed. Each terminal of the ECM connectors is sealed up with the grommet. Therefore, when measuring circuit voltage, resistance and/or pulse signal at ECM connector, do not insert the tester’s probe into the sealed terminal at the harness side. When measuring circuit voltage, resistance and/or pulse signal at ECM connector, connect the special tool to the ECM connectors. And, insert the tester’s probe into the special tool’s connectors at the harness side, and then measure voltage, resistance and/or pulse signal. Or, ECM and its circuits may be damaged by water.
- Wire colors of the special tool’s connectors are different from the ones of the ECM connectors. However, the circuit arrangement of the special tool’s connectors is same as the one of the ECM connectors. Therefore, measure circuit voltage and resistance by identifying the terminal location subject to the measurement.

Precautions of Electric Throttle Body System Calibration

S7RW0A1100006

After performing one of works described below, it is necessary to re-register the completely closed throttle valve reference position stored in memory of ECM. (For detailed information, refer to “Description of Electric Throttle Body System Calibration”.) For the procedure to register such data in ECM, refer to “Electric Throttle Body System Calibration in Section 1C”.

- To shut off backup power of ECM for such purposes of battery replacement or “DOME” fuse removal
- To erase DTCs P0122, P0123, P0222, P0223, P2101, P2102, P2103, P2111, P2112, P2119 and/or P2135
- To replace ECM
- To replace throttle body and/or accelerator pedal position (APP) sensor assembly

Precaution on CAN Troubleshooting

S7RW0A1100007

CAN schematic and routing diagram

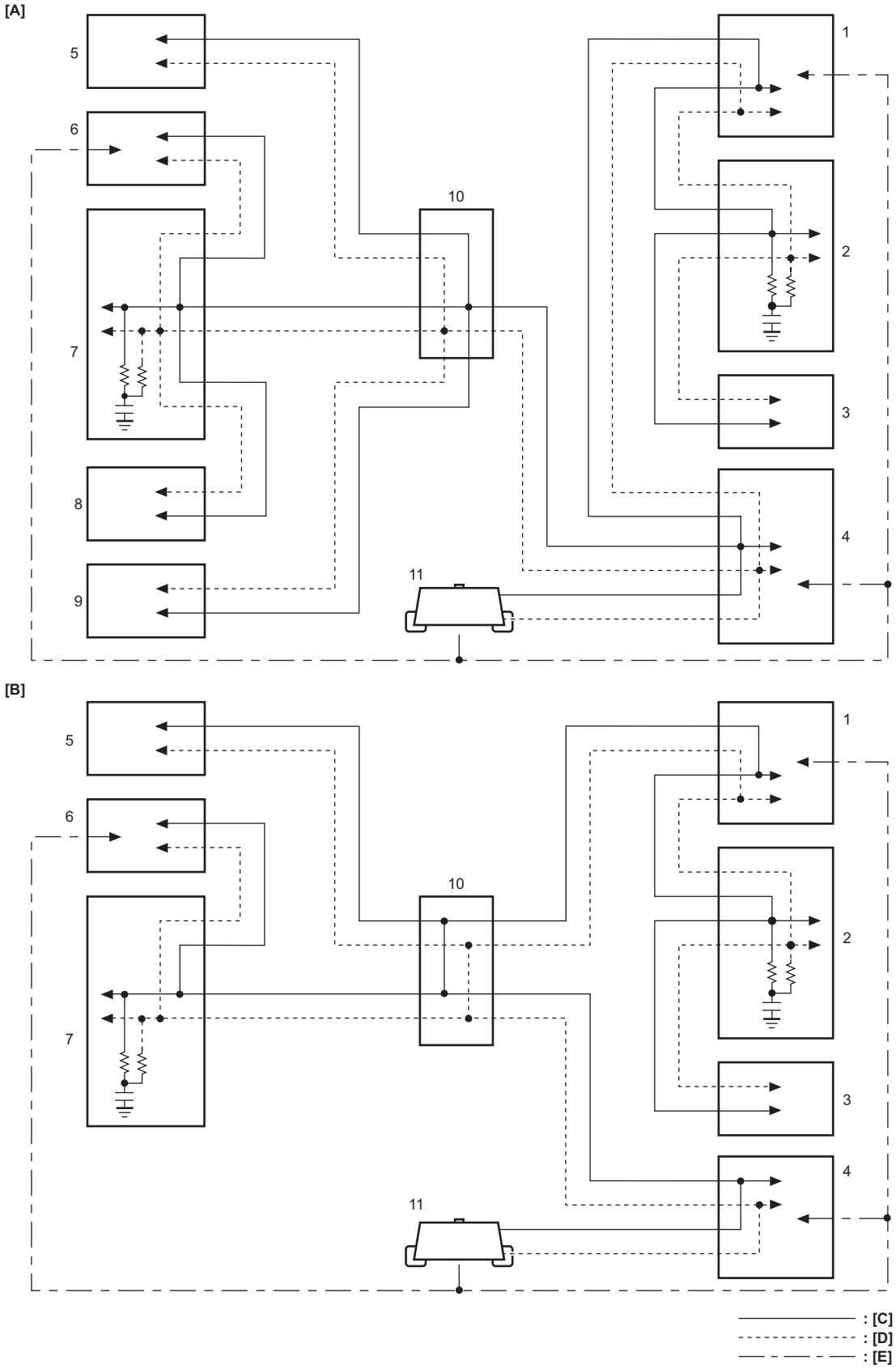

I7RW0A110001-03

[A]: Non-Taiwan model	[C]: CAN high line (RED)	[E]: K-line
[B]: Taiwan model	[D]: CAN low line (WHT)	

No.	Part Name	Communication with scan tool	Monitor of CAN-DTC
1.	ABS control module	K-line	Not available
	ESP® control module	K-line	Available
2.	ECM	CAN	Available
3.	TCM	CAN	Available
4.	BCM	K-line	Available
5.	Keyless start control module	Not available	Available
6.	4WD control module	K-line	Available
7.	Combination meter	Not available	Not available
8.	Steering angle sensor (ESP® model)	Not available	Not available
9.	Yaw rate / G sensor (ESP® model)	Not available	Not available
10.	CAN junction connector	—	—
11.	DLC	—	—

Outline of troubleshooting

When there is a trouble with CAN, perform “Troubleshooting for Communication Error with Scan Tool Using CAN” and/or “Troubleshooting for CAN-DTC”. Not using this procedure or performing troubleshooting in any other way may skip some check points resulting in misdiagnosis or take a longer time than necessary.

1) Checking connector related to CAN
2) Checking CAN line
3) Checking each control module/sensor using “DTC check” or “Bus Check”
4) Checking power and ground connection of each control module/sensor

CAN-DTC

Even when DTC related to CAN (= CAN-DTC) as described below is detected, it is not possible to point out the specific trouble point by CAN-DTC itself. Be sure to troubleshoot according to “Troubleshooting for CAN-DTC”.

CAN-DTC table

Detected Control Module	CAN-DTC
ECM	U0073/U0101/U0121/U0140/P1618
TCM	U0073/U0100
BCM	U0073/U0100/U0101/U0155/U1144
ESP® control module	U0073/U0100/U0101/U0123/U0126
4WD control module	U0073/U0100/U0121/U0155
Keyless start control module	No.31/No.33

Communication with scan tool

- K line or CAN line is used for communication between each control module and scan tool.
  Refer to “CAN schematic and routing diagram: ” to determine which line is used for communication between each control module and scan tool.
- ECM and TCM use CAN line for communication with scan tool. Even if CAN has a trouble other than between DLC and BCM, communication may also fail between scan tool and these control modules. In such case, perform troubleshooting according to “Troubleshooting for Communication Error with Scan Tool Using CAN”.
- BCM, ABS / ESP® control module and 4WD control module use K-line for communication with scan tool. Even if CAN has a trouble, it is possible to communicate between scan tool and these control modules.

Bus check with SUZUKI scan tool

SUZUKI scan tool (SUZUKI-SDT) efficiently diagnoses a CAN bus malfunction by “Communication Bus Check” and “Communication Malfunction DTC” under “Bus check”.
“Communication Bus Check” can display all control modules/sensors name communicated by CAN.
Also, “Communication Malfunction DTC” can display only CAN-DTC which is detected by the control modules (ECM and TCM) communicating with scan tool using CAN line.

General Description

Statement on Cleanliness and Care

S7RW0A1101001

An automobile engine is a combination of many machined, honed, polished and lapped surfaces with tolerances that are measured in the thousands of an millimeter (ten thousands of an inch).
Accordingly, when any internal engine parts are serviced, care and cleanliness are important.
It should be understood that proper cleaning and protection of machined surfaces and friction areas is part of the repair procedure. This is considered standard shop practice even if not specifically stated.

- A liberal coating of engine oil should be applied to friction areas during assembly to protect and lubricate the surfaces on initial operation.
- Whenever valve train components, pistons, piston rings, connecting rods, rod bearings, and crankshaft journal bearings are removed for service, they should be retained in order.
  At the time of installation, they should be installed in the same locations and with the same mating surfaces as when removed.
- Battery cables should be disconnected before any major work is performed on the engine.
  Failure to disconnect cables may result in damage to wire harness or other electrical parts.
- The four cylinders of the engine are identified by numbers; No.1 (1), No.2 (2), No.3 (3) and No.4 (4) counted from crankshaft pulley side to flywheel side.

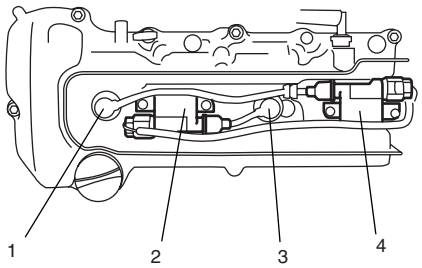

I3RM0A110001-01

Engine Diagnosis General Description

S7RW0A1101002

NOTE

There are two types of OBD system depending on the vehicle specification.
For identification, refer to “Precaution on On-Board Diagnostic (OBD) System”.

This vehicle is equipped with an engine and emission control system which are under control of ECM.
The engine and emission control system in this vehicle are controlled by ECM. ECM has an On-Board Diagnostic system which detects a malfunction in this system and abnormality of those parts that influence the engine exhaust emission. When diagnosing engine troubles, be sure to have full understanding of the outline of “On-Board Diagnostic System Description” and each item in “Precautions in Diagnosing Trouble” and execute diagnosis according to “Engine and Emission Control System Check”.
There is a close relationship between the engine mechanical, engine cooling system, ignition system, exhaust system, etc. and the engine and emission control system in their structure and operation. In case of an engine trouble, even when the malfunction indicator lamp (MIL) doesn’t turn ON, it should be diagnosed according to “Engine and Emission Control System Check”.

On-Board Diagnostic System Description

S7RW0A1101003

NOTE

There are two types of OBD system depending on the vehicle specification.
For identification, refer to “Precaution on On-Board Diagnostic (OBD) System”.

Euro OBD model

ECM in this vehicle has the following functions.

- When the ignition switch is turned ON with the engine at a stop, malfunction indicator lamp (MIL) (1) turns ON to check the circuit of the malfunction indicator lamp (1).
- When ECM detects a malfunction which gives an adverse effect to vehicle emission while the engine is running, it makes the malfunction indicator lamp (1) in the meter cluster of the instrument panel turn ON or flash (flashing only when detecting a misfire which can cause damage to the catalyst) and stores the malfunction area in its memory.
  (If it detects that continuously 3 driving cycles are normal after detecting a malfunction, however, it makes MIL (1) turn OFF although DTC stored in its memory will remain.)

- As a condition for detecting a malfunction in some areas in the system being monitored by ECM and turning ON the malfunction indicator lamp (1) due to that malfunction, 2 driving cycle detection logic is adopted to prevent erroneous detection.
- When a malfunction is detected, engine and driving conditions then are stored in ECM memory as freeze frame data. (For the details, refer to description on “Freeze Frame Data: ”.)
- It is possible to communicate via DLC (3) by using not only SUZUKI scan tool (2) but also CAN communication OBD generic scan tool. (Diagnostic information can be accessed by using a scan tool.)

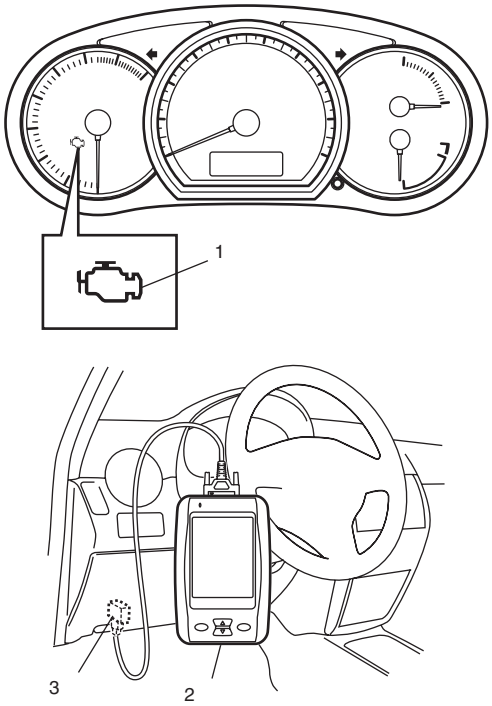

I5RW0C110001-01

Warm-Up Cycle
A warm-up cycle means sufficient vehicle operation such that the coolant temperature has risen by at least 22 °C (40 °F) from engine starting and reaches a minimum temperature of 70 °C (160 °F).

Driving Cycle
A “Driving Cycle” consists of engine startup and engine shutoff.

2 Driving Cycle Detection Logic
The malfunction detected in the first driving cycle is stored in ECM memory (in the form of pending DTC) but the malfunction indicator lamp does not light at this time. It lights up at the second detection of same malfunction also in the next driving cycle.

Pending DTC
Pending DTC means a DTC detected and stored temporarily at 1 driving cycle of the DTC which is detected in the 2 driving cycle detection logic.

Freeze Frame Data
ECM stores the engine and driving conditions (in the form of data as shown in the figure) at the moment of the detection of a malfunction in its memory. This data is called “Freeze frame data”.
Therefore, it is possible to know engine and driving conditions (e.g., whether the engine was warm or not, where the vehicle was running or stopped, where air/fuel mixture was lean or rich) when a malfunction was detected by checking the freeze frame data. Also, ECM has a function to store each freeze frame data for three different malfunctions in the order as each malfunction is detected. Utilizing this function, it is possible to know the order of malfunctions that have been detected. Its use is helpful when rechecking or diagnosing a trouble.

For example

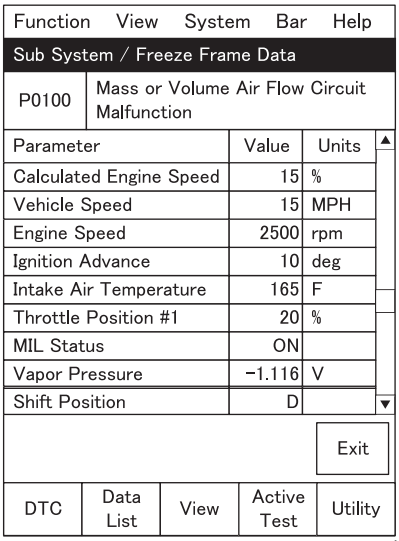

I5RW0C110028-03

Priority of freeze frame data:
ECM has 4 frames where the freeze frame data can be stored. The first frame stores the freeze frame data of the malfunction which was detected first. However, the freeze frame data stored in this frame is updated according to the priority described. (If malfunction as described in the upper square “1” is detected while the freeze frame data in the lower square “2” has been stored, the freeze frame data “2” will be updated by the freeze frame data “1”.)

Priority	Freeze frame data in frame 1
1	Freeze frame data at initial detection of malfunction among misfire detected (P0300 – P0304), fuel system too lean (P0171) and fuel system too rich (P0172)
2	Freeze frame data when a malfunction other than those in “1” is detected

In the 2nd through the 4th frames, the freeze frame data of each malfunction is stored in the order as each malfunction is detected. These data are not updated.
Shown in the table are examples of how freeze frame data are stored when two or more malfunctions are detected.

Malfunction detected order		Frame			
		Frame 1	Frame 2	Frame 3	Frame 4
		Freeze frame data to be updated	1st freeze frame data	2nd freeze frame data	3rd freeze frame data
No malfunction		No freeze frame data			
1	P0401 (EGR) detected	Data at P0401 detection	Data at P0401 detection	—	—
2	P0171 (Fuel system) detected	Data at P0171 detection	Data at P0401 detection	Data at P0171 detection	—
3	P0300 (Misfire) detected	Data at P0171 detection	Data at P0401 detection	Data at P0171 detection	Data at P0300 detection
4	P0301 (Misfire) detected	Data at P0171 detection	Data at P0401 detection	Data at P0171 detection	Data at P0300 detection

Freeze frame data clearance:
The freeze frame data is cleared at the same time as clearance of DTC.

Non-Euro-OBD Model
ECM diagnosis troubles which may occur in the area including the following parts when the ignition switch is ON and the engine is running, and indicates the result by turning on malfunction indicator lamp (MIL) (1).

- Heated oxygen sensor-1
- Heated oxygen sensor-2
- ECT sensor
- TP sensor
- Throttle actuator
- MAF sensor
- IAT sensor
- CMP sensor
- CKP sensor
- Knock sensor
- Wheel speed sensor
- CPU (Central Processing Unit) of ECM
- APP sensor
- Oil control valve (VVT model)
- Barometric pressure sensor
- A/C refrigerant pressure sensor
- ECM backup power supply
- Fuel level sensor
- CAN

ECM and MIL operate as follows.

- MIL lights when the ignition switch is turned ON (but the engine at stop) with the diagnosis switch terminal ungrounded regardless of the condition of Engine and Emission control system. This is only to check MIL in the combination meter and its circuit.
- If the above areas of Engine and Emission control system is free from any trouble after the engine start (while engine is running), MIL turns OFF.
- When ECM detects a trouble which has occurred in the above areas, it makes MIL turn ON while the engine is running to warn the driver of such occurrence of trouble and at the same time it stores the trouble area in ECM back-up memory. (The memory is kept as it is even if the trouble was only temporary and disappeared immediately. And it is not erased unless the power to ECM is shut off for specified time or it is cleared by SUZUKI scan tool (SUZUKI-SDT) (2).)
  For further detail of the checking / clearing procedure, refer to “DTC Check” or “DTC Clearance”.

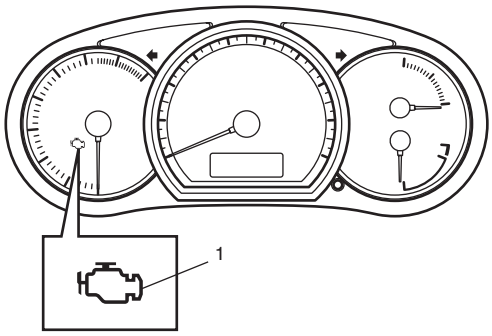

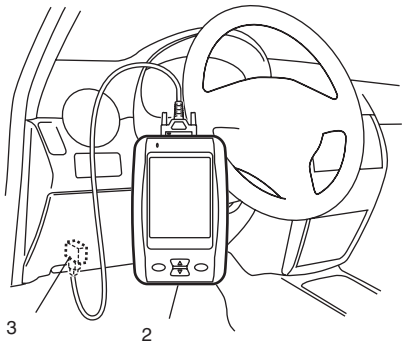

I5RW0C110001-01

3. DLC

For information about the following items, refer to “Euro OBD model: ”.

- Warm-up cycle
- Driving cycle
- 2 driving cycle detection logic
- Pending DTC

Data Link Connector (DLC) Description

S7RW0A1101004

NOTE

There are two types of OBD system depending on the vehicle specification.
For identification, refer to “Precaution on On-Board Diagnostic (OBD) System”.

DLC (1) is in compliance with SAE J1962 in the shape of connector and pin assignment.
OBD CAN Hi line (6) and Low line (3) (CAN line of ISO 15765-4) are used for SUZUKI scan tool (SUZUKI-SDT) (7) or CAN communication OBD generic scan tool to communicate with ECM (included in immobilizer control) and TCM (Transmission Control Module) (for A/T model).

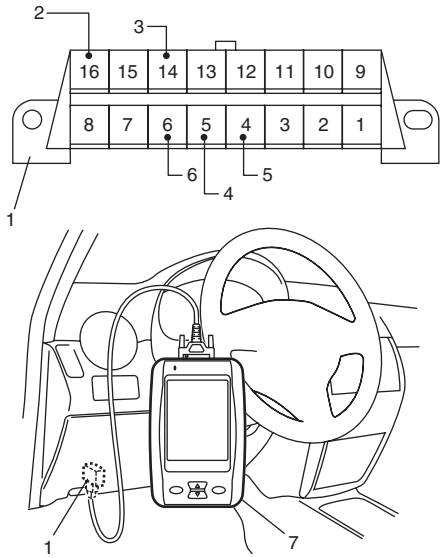

I7RW01110092-01

2.	B + (Unswitched vehicle battery positive)
4.	ECM ground (Signal ground)
5.	Vehicle body ground (Chassis ground)

Engine and Emission Control System Description

S7RW0A1101005

The engine and emission control system is divided into 4 major sub-systems: air intake system, fuel delivery system, electronic control system and emission control system.
Air intake system includes air cleaner, throttle body and intake manifold.
Fuel delivery system includes fuel pump, delivery pipe, etc.
Electronic control system includes ECM, various sensors and controlled devices.
Emission control system includes EGR, EVAP and PCV system.

CAN Communication System Description

S7RW0A1101006

ECM (1), ABS / ESP® control module (2), BCM (3), combination meter (4), keyless start control module (if equipped with keyless start control system) (5), 4WD control module (for 4WD model) (6), steering angle sensor (ESP® model) (8), yaw rate / G sensor (ESP® model) (9) and TCM (for A/T model) (7) of this vehicle communicate control data between each control module.
Communication of each control module / sensor is established by CAN (Controller Area Network) communication system.

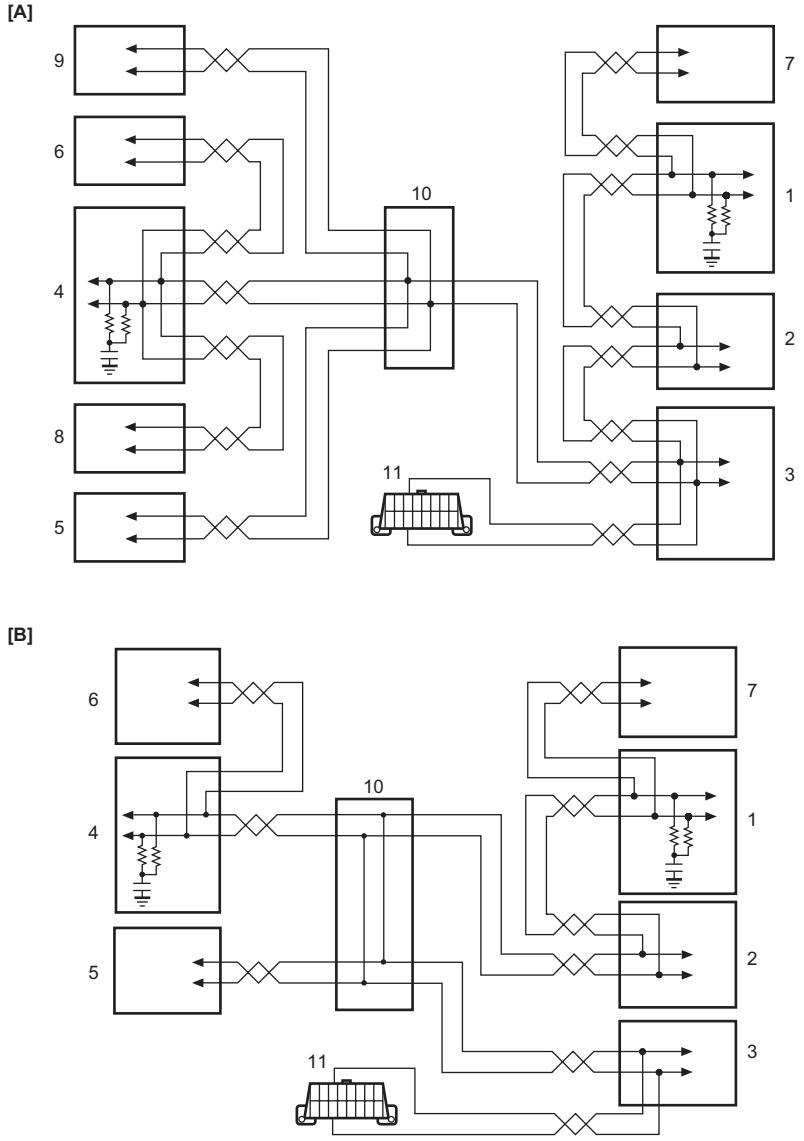

I7RW0A110002-01

[A]: Non-Taiwan model	10. CAN junction connector
[B]: Taiwan model	11. DLC

CAN communication system uses the serial communication in which data is transmitted at a high speed. It uses a twisted pair of two communication lines for the high-speed data transmission. As one of its characteristics, multiple control modules can communicate simultaneously. In addition, it has a function to detect a communication error automatically. Each module reads necessary data from the received data and transmits data. ECM communicates control data with each control module as follows.

ECM Transmission Data

				TCM	BCM	Combination meter	ESP® control module	4WD control module	Keyless start control module
ECM	Transmit	DATA	Driving cycle active	○					
			Warm up cycle active	○					
			Throttle position signal	○					
			A/C compressor clutch signal	○	○				
			A/C refrigerant pressure signal		○				
			Fuel consumption signal		○				
			Fuel level signal			○			
			Odometer signal			○			
			Engine coolant temperature signal	○	○	○			
			Immobilizer indicator light control signal			○			
			MIL control signal			○			
			Engine type signal		○			○	
			Engine torque signal	○			○	○	
			Accelerator pedal position signal	○			○	○	
			Brake pedal switch signal	○	○			○	
			Engine speed signal	○	○	○	○	○	
			Vehicle speed signal		○	○			○
			ECM-keyless start control module code						○

I7RW0A110003-01

ECM Reception Data

				TCM	BCM	ESP® control module	ABS control module	4WD control module	Keyless start control module
ECM	Receive	DATA	Torque request signal	○					
			A/T selector lever position signal	○					
			Transmission actual gear position signal	○					
			Transmission oil temperature signal	○					
			Vehicle speed pulse signal	○					
			MIL control signal	○					
			Transmission warning light signal	○					
			A/C switch ON signal		○				
			Electric load signal		○				
			Wheel speed signal (front right)			○	○		
			Wheel speed signal (front left)			○	○		
			Fuel cut inhibit signal			○			
			ESP® status signal			○			
			ABS indication signal			○	○		
			4WD mode status					○	
			ECM-keyless start control module code						○
			ID code of keyless start control module						○

I7RW0A110004-01

Air Intake System Description

S7RW0A1101007

The main components of the air intake system are air cleaner (1), air cleaner outlet hose (2), electric throttle body (3) (for the details, refer to “Electric Throttle Body System Description”.), and intake manifold (4).
The air (by the amount corresponding to throttle valve (5) opening and engine speed) is filtered by the air cleaner, distributed by the intake, and finally drawn into each combustion chamber. Electric throttle body is not equipped with IAC valve for idle speed control. Idle speed control is done by the throttle actuator (6) which opens/closes the throttle valve. (For the details, refer to “Electric Throttle Body System Description”.)

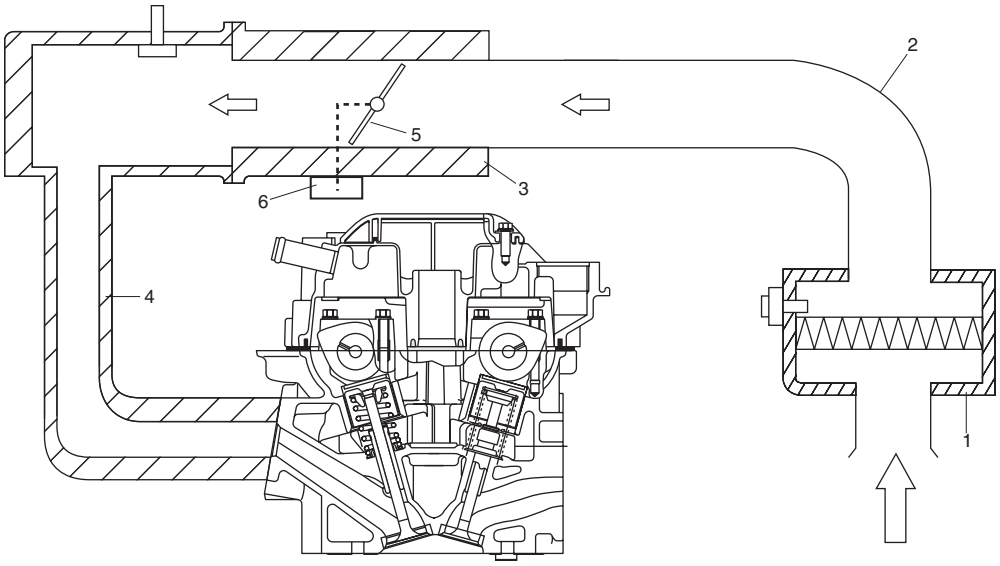

I5RW0A110006-02

Description of Electric Throttle Body System Calibration

S7RW0A1101008

ECM calculates controlled opening of the throttle valve on the basis of the completely closed throttle valve position of the electric throttle body system. The completely closed position data is saved in memory of ECM. However, the completely closed position of the throttle valve of the electric throttle body system (signal voltage from throttle position sensor when throttle is completely closed) differs one from the other depending on individual differences of the throttle valve and throttle position sensor. As such individual differences must be taken into account for controlling the throttle valve, it is necessary to register the completely closed throttle valve position data in ECM. When such data is registered in ECM, it is saved in RAM (memory) of ECM and used as the base data for controlling the throttle valve. This data is cleared, when any of the works described in “Precautions of Electric Throttle Body System Calibration” is performed.
Also, after replacement of the throttle body and/or APP sensor assembly, the completely closed position data in memory of ECM must be cleared once and a new one must be registered, or ECM cannot judge the complete closure position properly.
For the procedure to register such data, refer to “Electric Throttle Body System Calibration in Section 1C”. (After the completely closed position data is cleared, ECM, for the first time only, opens and closes the throttle valve for about 5 seconds after the ignition switch is turned ON position, for registration of the completely closed throttle valve position. If the engine is started during this registration process, such symptom as “longer cranking time” or “slow rise of revolution speed immediately after start-up” may occur. However, turning OFF the ignition switch once and restarting will set correct registration.)

Electric Throttle Body System Description

S7RW0A1101009

The Electric Throttle Body System consists of electric throttle body assembly, accelerator pedal position (APP) sensor assembly, ECM and throttle actuator control relay.
Among them, assembly components are as follows.

- Electric throttle body assembly: throttle valve, throttle actuator, 2 throttle position sensors
- APP sensor assembly: Accelerator pedal, 2 accelerator position sensors

Operation Description

ECM (5) detects opening (depressed extent of pedal) of the accelerator pedal based on signal voltage of the APP sensor (1) and using that data and engine operation condition, it calculates the optimum throttle valve opening. On the other hand, it detects the throttle valve opening based on the signal voltage of the throttle position sensor (3) included in the throttle body (2) and compares it with the above calculated optimum throttle valve opening. When there is a difference between them, ECM controls the duty ratio (100% – 0%) according to this difference to drive the throttle actuator (motor) (4) included in the throttle body. When there is no difference, ECM controls the duty ratio to about 15% to maintain the throttle valve opening. In this way, the throttle valve (17) is opened and closed to achieve the optimum throttle valve opening.

In this system, as the throttle position sensor and APP sensor have 2 sensors (main and sub) each, highly accurate and highly reliable control and abnormality detection are assured. Also, when ECM detects an abnormality in the system, it turns off the throttle actuator control relay (8) to stop controlling the throttle actuator. When the throttle actuator control relay is turned off, the throttle valve is fixed at the opening of about 7° from its completely closed position (default opening) by the force of the return spring and open spring included in the throttle body.

This throttle body is not equipped with IAC valve for idle speed control. Idle speed control is done by the throttle actuator which opens/closes the throttle valve.

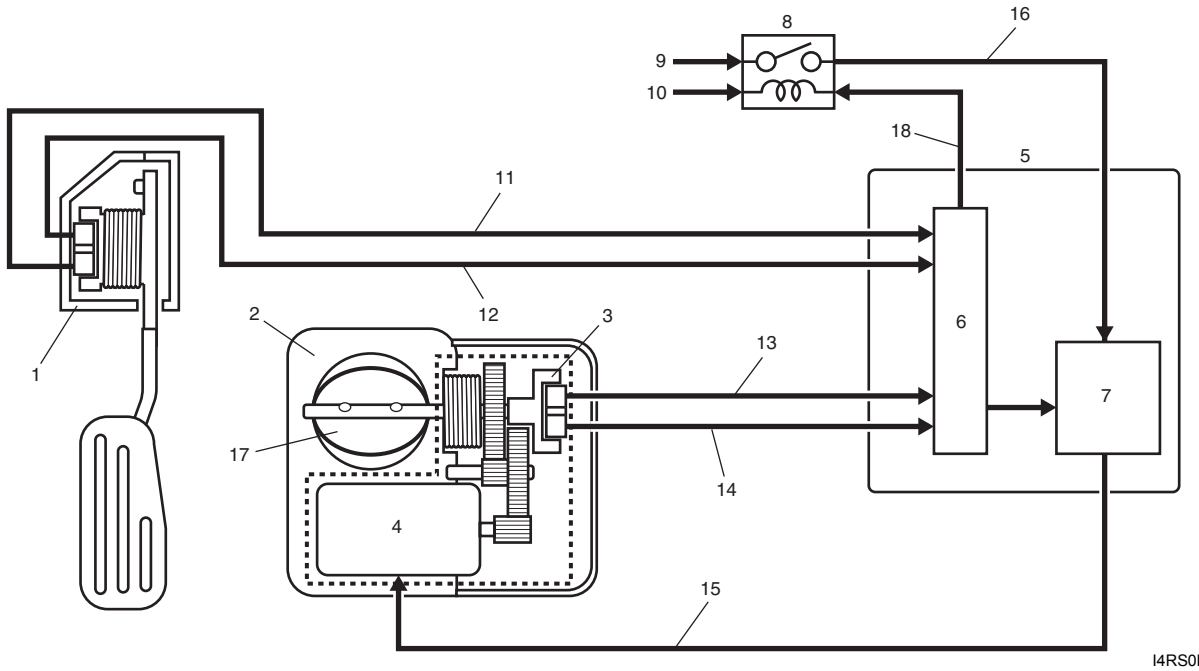

I4RS0B110007-02

6. CPU	11. APP sensor (main) signal	15. Drive signal of throttle actuator
7. Drive circuit of throttle actuator	12. APP sensor (sub) signal	16. Power supply of throttle actuator
9. From “THR MOT” fuse	13. Throttle position sensor (main) signal	18. Control signal of throttle actuator control relay
10. From main relay	14. Throttle position sensor (sub) signal	

Electronic Control System Description

S7RW0A1101011

The electronic control system consists of 1) various sensors which detect the state of engine and driving conditions, 2) ECM which controls various devices according to the signals from the sensors and 3) various controlled devices.

Functionally, it is divided into the following sub systems:

- Fuel injection control system
- Ignition control system
- Electric throttle body control system
- Fuel pump control system
- Radiator cooling fan control system
- Evaporative emission control system
- EGR system (if equipped)
- Oxygen sensor heater control system
- A/C control system (if equipped with A/C)
- Camshaft position control system
- Immobilizer control system
- Controller (computer) communication system

Especially, ECM (Engine Control Module), BCM (Body electrical Control Module), combination meter, ABS / ESP® control module, keyless start control module (if equipped with keyless start control system), TCM (Transmission Control Module) (for A/T model) and 4WD control module (if equipped) intercommunicate by means of CAN (Controller Area Network) communication.

Refer to “Engine and Emission Control System Flow Diagram” and “ECM Input / Output Circuit Diagram”.

Engine and Emission Control Input / Output Table

S7RW0A1101010

INPUT \ OUTPUT		ELECTRIC CONTROL DEVICE													
		FUEL PUMP RELAY	FUEL INJECTOR	HO2S HEATER	THROTTLE ACTUATOR	IGNITION COIL WITH IGNITER	EGR VALVE (if equipped)	EVAP CANISTER PURGE VALVE	A/C COMPRESSOR RELAY (if equipped with A/C)	A/C CONDENSER FAN RELAY	RADIATOR FAN RELAY	MIL	MAIN RELAY	OIL CONTROL VALVE (for engine with VVT system)	THROTTLE ACTUATOR CONTROL RELAY
SIGNAL FROM SENSOR, SWITCH AND CONTROL MODULE	BAROMETRIC PRESSURE SENSOR		○	○	○	○	○	○				○			
	BRAKE LIGHT SWITCH		○		○										
	START SWITCH	○	○	○	○	○	○		○						
	IGNITION SWITCH	○	○	○	○	○	○	○	○	○	○	○	○	○	○
	A/C REFRIGERANT PRESSURE SENSOR (if equipped with A/C)		○		○				○	○	○				
	BLOWER SWITCH				○	○		○	○	○	○				
	A/C SWITCH (if equipped with A/C)		○		○	○		○	○	○	○				
	A/C EVAP OUTLET AIR TEMP. SENSOR (if equipped with A/C)		○		○				○	○	○				
	WHEEL SPEED SENSOR		○		○	○	○	○	○	○	○	○		○	
	HEATED OXYGEN SENSOR-1		○		○		○	○				○			
	HEATED OXYGEN SENSOR-2 (if equipped)		○		○		○	○				○			
	MAF SENSOR OF MAF AND IAT SENSOR		○	○	○	○	○	○				○		○	
	IAT SENSOR OF MAF AND IAT SENSOR		○	○	○	○	○	○				○		○	
	ECT SENSOR		○	○	○	○	○	○	○	○	○	○		○	
	TP SENSOR		○	○	○	○	○	○	○			○		○	○
	APP SENSOR				○							○			○
	MAP SENSOR (if equipped)		○		○	○	○					○			
	CMP SENSOR		○			○						○		○	
	CKP SENSOR	○	○	○	○	○	○	○	○			○		○	
	KNOCK SENSOR					○						○			
	ABS / ESP® CONTROL MODULE		○		○										
	IMMOBILIZER CONTROL MODULE (in ECM)	○	○			○						○			
	ELECTRIC LOAD (head light, rear defogger)				○										
	TCM (for A/T model)		○	○	○	○									
	P/S CONTROL MODULE		○		○										

I7RW0A110006-04

Schematic and Routing Diagram

ECM Input / Output Circuit Diagram

S7RW0A1102003

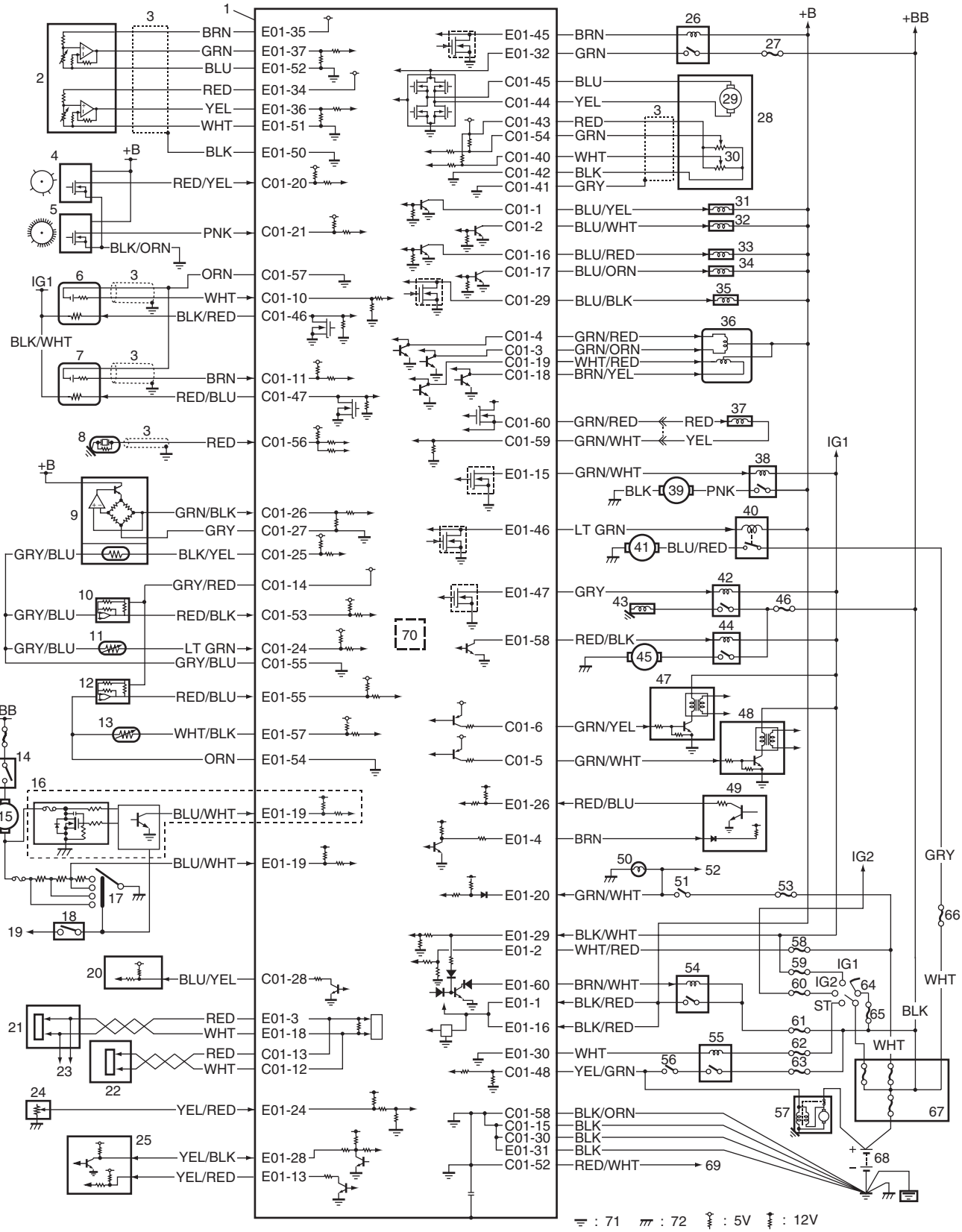

I7RW0A110007-01

1. ECM	25. Immobilizer coil antenna	49. P/S control module
2. APP sensor assembly	26. Throttle actuator control relay	50. Brake light
3. Shield wire	27. “THR MOT” fuse	51. Brake light switch

4. CMP sensor	28. Electric throttle body assembly	52. To ABS / ESP® control module
5. CKP sensor	29. Throttle actuator	53. “STOP” fuse
6. HO2S-1	30. TP sensor	54. Main relay
7. HO2S-2 (if equipped)	31. Fuel injector No.1	55. Starting motor control relay
8. Knock sensor	32. Fuel injector No.2	56. Transmission range switch (A/T model)
9. MAF and IAT sensor	33. Fuel injector No.3	57. Starting motor
10. MAP sensor (if equipped)	34. Fuel injector No.4	58. “DOME” fuse
11. ECT sensor	35. EVAP canister purge valve	59. “IG COIL” fuse
12. A/C refrigerant pressure sensor	36. EGR valve (if equipped)	60. “IG2 SIG” fuse
13. A/C evaporator outlet air temp. sensor (Manual A/C model)	37. Oil control valve (Camshaft position control) (VVT model)	61. “FI” fuse
14. Blower motor relay	38. Fuel pump relay	62. “ST SIG” fuse
15. Blower motor	39. Fuel pump	63. “ST” fuse
16. Blower speed selector (Auto A/C model)	40. Radiator cooling fan motor relay	64. Ignition switch
17. Blower speed selector (Manual A/C model)	41. Radiator cooling fan motor	65. “IGN” fuse
18. A/C switch	42. A/C compressor relay	66. “RDTR” fuse
19. To BCM	43. A/C compressor	67. Main fuse box
20. Generator	44. A/C condenser cooling fan motor relay	68. Battery
21. ABS / ESP® control module	45. A/C condenser cooling fan motor	69. Shield ground
22. TCM	46. A/C fuse	70. Barometric pressure sensor
23. To other control module and DLC connected CAN	47. Ignition coil assembly (for No.1 and No.4 spark plugs)	71. Engine ground
24. Fuel level sensor	48. Ignition coil assembly (for No.2 and No.3 spark plugs)	72. Body ground

Terminal Arrangement of ECM Coupler (Viewed from Harness Side)

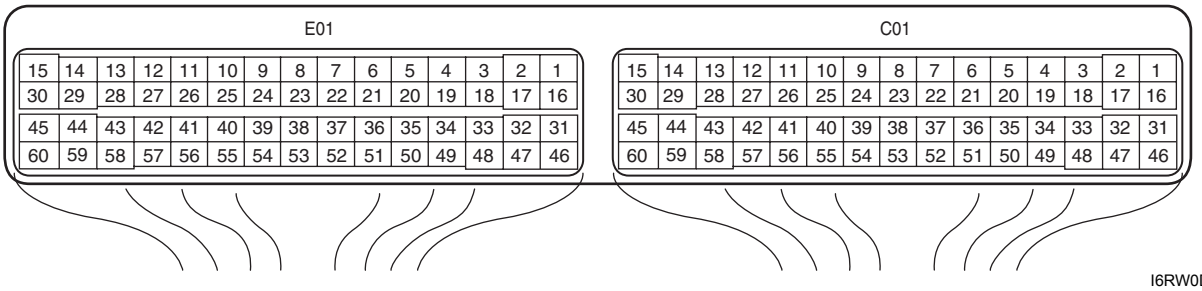

I6RW0D110014-01

Connector: C01

Terminal	Wire color	Circuit	Terminal	Wire color	Circuit
1	BLU/YEL	Fuel injector No.1 output	31	—	—
2	BLU/WHT	Fuel injector No.2 output	32	—	—
3	GRN/ORN	EGR valve (stepper motor coil 2) output	33	—	—
4	GRN/RED	EGR valve (stepper motor coil 1) output	34	—	—
5	GRN/WHT	Ignition coil No.2 and No.3 output	35	—	—
6	GRN/YEL	Ignition coil No.1 and No.4 output	36	—	—
7	—	—	37	—	—
8	—	—	38	—	—
9	—	—	39	—	—
10	WHT	Oxygen signal of heated oxygen sensor-1	40	WHT	Throttle position sensor (sub) signal
11	BRN	Oxygen signal of heated oxygen sensor-2 (if equipped)	41	GRY	Ground for shield wire of TP sensor circuit
12	WHT	CAN communication line (active low signal) to TCM (for A/T model)	42	BLK	Ground for throttle position sensor
13	RED	CAN communication line (active high signal) to TCM (for A/T model)	43	RED	Output for 5 V power source of throttle position sensor
14	GRY/RED	Output of 5 V power source for MAP sensor (if equipped) and A/C refrigerant pressure sensor (A/C model)	44	YEL	Output of throttle actuator
15	BLK	Ground for ECM	45	BLU	Output of throttle actuator
16	BLU/RED	Fuel injector No.3 output	46	BLK/RED	Heater output of heated oxygen sensor-1
17	BLU/ORN	Fuel injector No.4 output	47	RED/BLU	Heater output of heated oxygen sensor-2 (if equipped)
18	BRN/YEL	EGR valve (stepper motor coil 4) output (if equipped)	48	YEL/GRN	Starting motor signal
19	WHT/RED	EGR valve (stepper motor coil 3) output (if quipped)	49	—	—
20	RED/YEL	CMP sensor signal	50	WHT/BLU	Ground of ECM for shield wire
21	PNK	CKP sensor signal	51	—	—
22	—	—	52	—	—
23	—	—	53	RED/BLK	Manifold absolute pressure (MAP) sensor signal (if equipped)
24	LT GRN	Engine coolant temp. (ECT) sensor signal	54	GRN	Throttle position sensor (main) signal
25	BLK/YEL	Intake air temp. (IAT) sensor signal	55	GRY/BLU	Ground for sensors
26	GRN/BLK	Mass air flow (MAF) sensor signal	56	RED	Knock sensor signal
27	GRY	Ground for MAF sensor	57	ORN	Ground for sensors
28	BLU/YEL	Generator control output	58	BLK/ORN	Ground for ECM
29	BLU/BLK	EVAP canister purge valve output	59	GRN/WHT	Oil control valve ground (for engine with VVT system)
30	BLK	Ground for ECM	60	GRN/RED	Oil control valve output (for engine with VVT system)

Connector: E01

Terminal	Wire color	Circuit	Terminal	Wire color	Circuit
1	BLK/RED	Main power supply	31	BLK	Ground for ECM
2	WHT/RED	Power source for ECM internal memory	32	GRN	Power supply of throttle actuator drive circuit.
3	RED	CAN communication line (active high signal) to ABS / ESP® control module assembly	33	—	—
4	BRN	Engine revolution signal output for EPS control module	34	RED	Output for 5 V power source of APP sensor (sub)
5	—	—	35	BRN	Output for 5 V power source of APP sensor (main)
6	—	—	36	YEL	APP sensor (sub) signal
7	—	—	37	GRN	APP sensor (main) signal
8	—	—	38	—	—
9	—	—	39	—	—
10	—	—	40	—	—
11	—	—	41	—	—
12	—	—	42	—	—
13	YEL/RED	Clock signal for immobilizer coil antenna	43	—	—
14	—	—	44	—	—
15	GRN/WHT	Fuel pump relay output	45	BRN	Throttle actuator control relay output
16	BLK/RED	Main power supply	46	LT GRN	Radiator cooling fan relay output
17	—	—	47	GRY	A/C compressor relay output (if equipped with A/C)
18	WHT	CAN communication line (active low signal) to ABS / ESP® control module assembly	48	—	—
19	BLU/WHT	Electric load signal for heater blower motor	49	—	—
20	GRN/WHT	Brake light switch signal	50	BLK	Ground for shield wire of APP sensor
21	—	—	51	WHT	Ground for APP sensor (sub) signal
22	—	—	52	BLU	Ground for APP sensor (main) signal
23	—	—	53	—	—
24	YEL/RED	Fuel level sensor signal	54	ORN	Ground for sensors
25	—	—	55	RED/BLU	A/C refrigerant pressure sensor signal (if equipped with A/C)
26	RED/BLU	EPS signal	56	WHT/GRN	—
27	—	—	57	WHT/BLK	A/C evaporator outlet air temp. sensor signal (if equipped with A/C)
28	YEL/BLK	Serial communication line for immobilizer coil antenna	58	RED/BLK	—
29	BLK/WHT	Ignition switch signal	59	—	—
30	WHT	Starting motor control relay output	60	BRN/WHT	Main power supply relay output

Engine and Emission Control System Flow Diagram

S7RW0A1102002

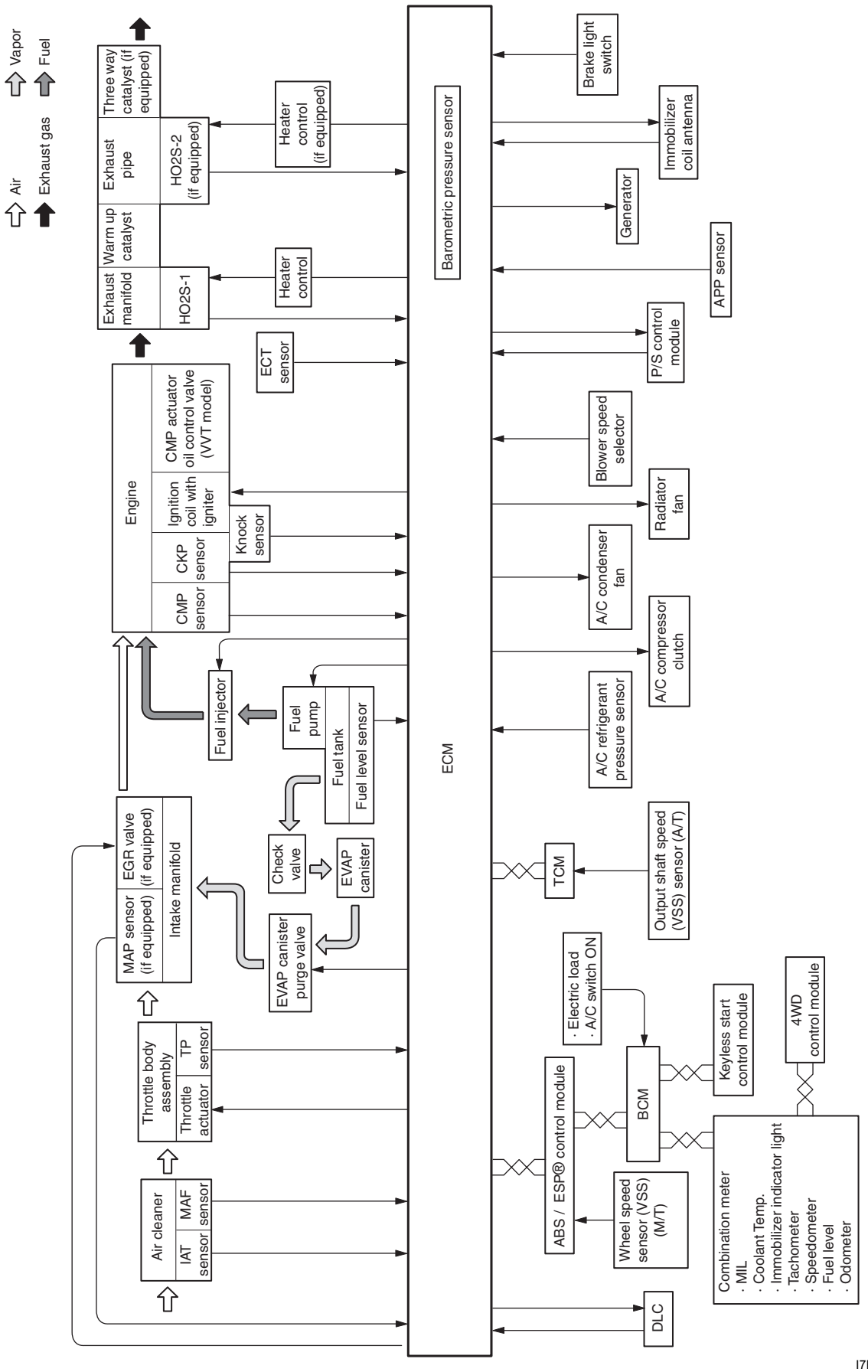

I7RW0A110008-02

Engine and Emission Control System Diagram

S7RW0A1102001

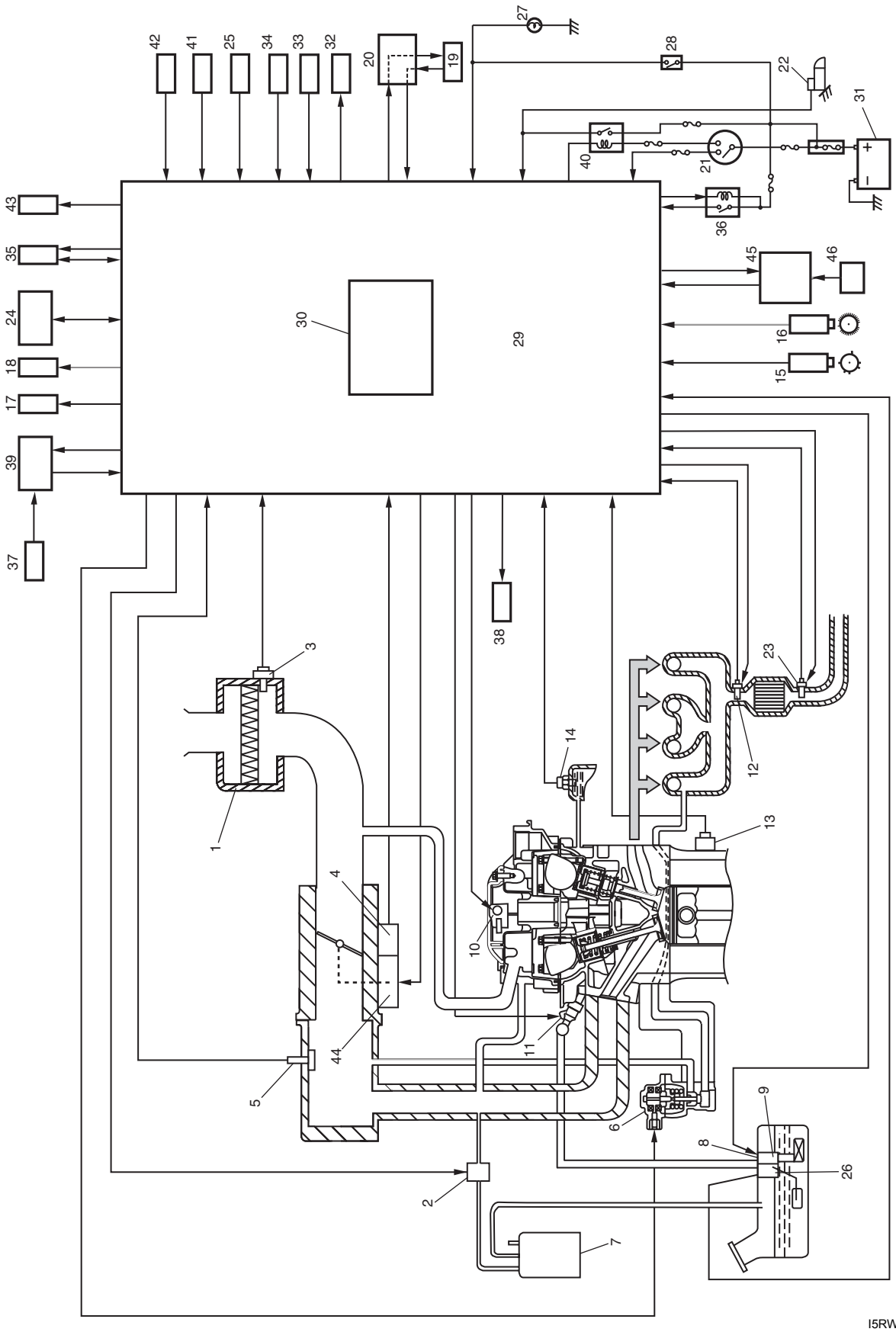

I5RW0C110009-02

1. Air cleaner	17. Radiator cooling fan	33. A/C switch (A/C model)
2. EVAP canister purge valve	18. A/C condenser cooling fan	34. A/C evaporator outlet air temp. sensor (manual A/C model)
3. MAF and IAT sensor	19. Combination meter	35. Immobilizer coil antenna
4. TP sensor	20. BCM	36. Main relay
5. MAP sensor (if equipped)	21. Ignition switch	37. Wheel speed sensor (VSS) (for M/T model)
6. EGR valve (if equipped)	22. Starter magnetic switch	38. Oil control valve
7. EVAP canister	23. Heated oxygen sensor (HO2S)-2 (if equipped)	39. ABS / ESP® control module
8. Tank pressure control valve (built-in fuel pump)	24. DLC	40. Starting motor control relay
9. Fuel pump (with pressure regulator)	25. Electric load	41. A/C refrigerant pressure sensor (A/C model)
10. Ignition coil assembly	26. Fuel level sensor	42. APP sensor
11. Fuel injector	27. Brake light	43. Throttle actuator control relay
12. Heated oxygen sensor (HO2S)-1	28. Brake light switch	44. Throttle actuator
13. Knock sensor	29. ECM	45. TCM (for A/T model)
14. ECT sensor	30. Barometric pressure sensor	46. Output shaft speed sensor (VSS) (for A/T model)
15. CMP sensor	31. Battery	
16. CKP sensor	32. A/C compressor relay (A/C model)	

Component Location

Electronic Control System Components Location

S7RW0A1103001

NOTE

The figure shows left-hand steering vehicle. For right-hand steering vehicle, parts with (*) are installed at the opposite side.

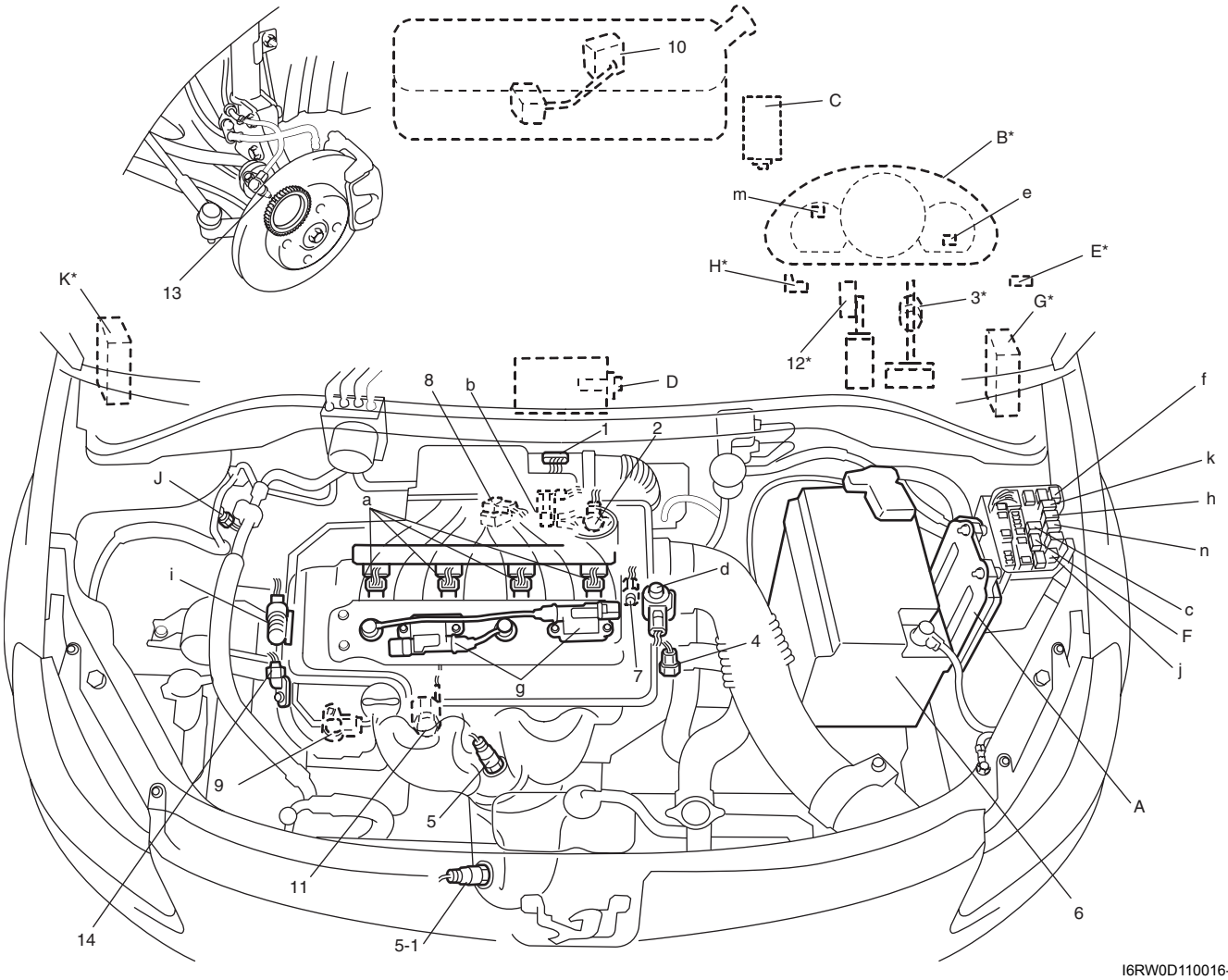

I6RW0D110016-03

Information sensors	Control devices	Others
1. MAF and IAT sensor	a: Fuel injector	A: ECM
2. Electric throttle body assembly (built-in throttle position sensor and throttle actuator)	b: EVAP canister purge valve	B: Combination meter
3. Brake light switch	c: Fuel pump relay	C: EVAP canister
4. ECT sensor	d: EGR valve (if equipped)	D: A/C evaporator outlet air temp. sensor (if equipped with A/C)
5. Heated oxygen sensor-1	e: Malfunction indicator lamp	E: Data link connector
5-1. Heated oxygen sensor-2 (if equipped)	f: Radiator cooling fan relay	F: A/C compressor relay (if equipped with A/C)
6. Battery	g: Ignition coil assembly (with ignitor)	G: BCM (included in junction block assembly)
7. CMP sensor (for engine with VVT system)	h: Main relay	H: Immobilizer coil antenna
8. MAP sensor (if equipped)	i: Oil control valve (for engine with VVT system)	J: A/C refrigerant pressure sensor (if equipped with A/C)
9. CKP sensor	j: A/C condenser cooling fan relay	K: TCM (for A/T model)
10. Fuel level sensor	k: Starting motor control relay	
11. Knock sensor	m: Immobilizer indicator lamp	
12. APP sensor	n: Throttle actuator control relay	
13. Front wheel speed sensor (RH, LH) (VSS)		
14. CMP sensor (for engine without VVT system)		

Diagnostic Information and Procedures

Engine and Emission Control System Check

S7RW0A1104001

Refer to the following items for the details of each step.

Step	Action	Yes	No
1	☞ **Customer complaint analysis** 1) Perform customer complaint analysis referring to “Customer Complaint Analysis”. *Was customer complaint analysis performed?*	Go to Step 2.	Perform customer complaint analysis.
2	☞ **DTC / Freeze frame data check, record and clearance** 1) Check for DTC (including pending DTC) referring to “DTC / Freeze Frame Data Check, Record and Clearance”. *Is there any DTC(s)?*	Print DTC and freeze frame data or write them down and clear them by referring to “DTC Clearance”, and go to Step 3.	Go to Step 4.
3	☞ **Visual inspection** 1) Perform visual inspection referring to “Visual Inspection”. *Is there any faulty condition?*	Repair or replace malfunction part, and go to Step 11.	Go to Step 5.
4	☞ **Visual inspection** 1) Perform visual inspection referring to “Visual Inspection”. *Is there any faulty condition?*	Repair or replace malfunction part, and go to Step 11.	Go to Step 8.
5	☞ **Trouble symptom confirmation** 1) Confirm trouble symptom referring to “Trouble Symptom Confirmation”. *Is trouble symptom identified?*	Go to Step 6.	Go to Step 7.
6	☞ **Rechecking and record of DTC / Freeze frame data** 1) Recheck for DTC and freeze frame data referring to “DTC Check”. *Is there any DTC(s)?*	Go to Step 9.	Go to Step 8.
7	☞ **Rechecking and record of DTC / Freeze frame data** 1) Recheck for DTC and freeze frame data referring to “DTC Check”. *Is there any DTC(s)?*	Go to Step 9.	Go to Step 10.
8	☞ **Engine basic inspection and engine symptom diagnosis** 1) Check and repair according to “Engine Basic Inspection” and “Engine Symptom Diagnosis”. *Are check and repair complete?*	Go to Step 11.	Check and repair malfunction part(s), and go to Step 11.
9	☞ **Troubleshooting for DTC** 1) Check and repair according to applicable DTC diag. flow. *Are check and repair complete?*	Go to Step 11.	Check and repair malfunction part(s), and go to Step 11.
10	☞ **Intermittent problems check** 1) Check for intermittent problems referring to “Intermittent Problems Check”. *Is there any faulty condition?*	Repair or replace malfunction part(s), and go to Step 11.	Go to Step 11.

Step	Action	Yes	No
11	☞ **Final confirmation test** 1) Clear DTC if any. 2) Perform final confirmation test referring to “Final Confirmation Test”. *Is there any problem symptom, DTC or abnormal condition?*	Go to Step 6.	End.

Step 1: Customer Complaint Analysis

Record details of the problem (failure, complaint) and how it occurred as described by the customer. For this purpose, use of such an inspection form will facilitate collecting information to the point required for proper analysis and diagnosis.

Customer problem inspection form (Example)

User name:	Model:	VIN:	
Date of issue:	Date Reg.	Date of problem:	Mileage:

PROBLEM SYMPTOMS	
☐ **Difficult Starting** ☐ No cranking ☐ No initial combustion ☐ No combustion ☐ Poor starting at (☐cold ☐warm ☐always) ☐ Other_____	☐ **Poor Driveability** ☐ Hesitation on acceleration ☐ Back fire/☐After fire ☐ Lack of power ☐ Surging ☐ abnormal knocking ☐ Other_____
☐ **Poor Idling** ☐ Poor fast idle ☐ Abnormal idling speed (☐High ☐Low) (r/min.) ☐ Unstable ☐ Hunting (r/min. to r/min.) ☐ Other_____	☐ **Engine Stall when** ☐ Immediately after start ☐ Accel. pedal is depressed ☐ Accel. pedal is released ☐ Load is applied ☐ A/C ☐Electric load ☐P/S ☐ Other_____ ☐ Other_____
☐ OTHERS:	

VEHICLE/ENVIRONMENTAL CONDITION WHEN PROBLEM OCCURS	
Environmental Condition	
Weather	☐Fair ☐Cloudy ☐Rain ☐Snow ☐Always ☐Other_____
Temperature	☐Hot ☐Warm ☐Cool ☐Cold (°F/ °C) ☐Always
Frequency	☐Always ☐Sometimes (times/ day, month) ☐Only once ☐Under certain condition
Road	☐Urban ☐Suburb ☐Highway ☐Mountainous (☐Uphill ☐Downhill) ☐Tarmacadam ☐Gravel ☐Other_____
Vehicle Condition	
Engine condition	☐Cold ☐Warming up phase ☐Warmed up ☐Always ☐Other at starting ☐Immediately after start ☐Racing without load ☐Engine speed (r/min)
Vehicle condition	During driving: ☐Constant speed ☐Accelerating ☐Decelerating ☐Right hand corner ☐Left hand corner ☐When shifting (Lever position) ☐At stop ☐Vehicle speed when problem occurs (km/h, Mile/h) ☐Other

Malfunction indicator lamp condition	☐Always ON ☐Sometimes ON ☐Always OFF ☐Good condition
Diagnostic trouble code	First check: ☐No code ☐Malfunction code ( )
	Second check: ☐No code ☐Malfunction code ( )

I2RH01110010-02

NOTE

This form is a standard sample. It should be modified according to conditions characteristic of each market.

Step 2: DTC / Freeze Frame Data Check, Record and Clearance
First, check DTC (including pending DTC), referring to "DTC Check". If DTC is indicated, print it and freeze frame data or write them down and then clear them by referring to "DTC Clearance". DTC indicates malfunction that occurred in the system but does not indicate whether it exists now or it occurred in the past and the normal condition has been restored now. To check which case applies, check the symptom in question according to Step 5 and recheck DTC according to Step 6 and 7. Attempt to diagnose a trouble based on DTC in this step only or failure to clear the DTC in this step will lead to incorrect diagnosis, trouble diagnosis of a normal circuit or difficulty in troubleshooting.

Step 3 and 4: Visual Inspection
As a preliminary step, be sure to perform visual check of the items that support proper function of the engine referring to "Visual Inspection".

Step 5: Trouble Symptom Confirmation
Based on information obtained in "Step 1: Customer Complaint Analysis: " and "Step 2: DTC / Freeze Frame Data Check, Record and Clearance: ", confirm trouble symptoms. Also, reconfirm DTC according to "DTC Confirmation Procedure" described in each DTC diag. flow.

Step 6 and 7: Rechecking and Record of DTC / Freeze Frame Data
Refer to "DTC Check" for checking procedure.

Step 8: Engine Basic Inspection and Engine Symptom Diagnosis
Perform basic engine check according to "Engine Basic Inspection" first. When the end of the flow has been reached, check the parts of the system suspected as a possible cause referring to "Engine Symptom Diagnosis" and based on symptoms appearing on the vehicle (symptoms obtained through steps of customer complaint analysis, trouble symptom confirmation and/or basic engine check) and repair or replace faulty parts, if any.

Step 9: Troubleshooting for DTC (See each DTC Diag. Flow)
Based on the DTC indicated in Step 6 or 7 and referring to the applicable DTC diag. flow, locate the cause of the trouble, namely in a sensor, switch, wire harness, connector, actuator, ECM or other part and repair or replace faulty parts.

Step 10: Intermittent Problems Check
Check parts where an intermittent trouble is easy to occur (e.g., wire harness, connector, etc.), referring to "Intermittent and Poor Connection Inspection in Section 00" and related circuit of DTC recorded in Step 2.

Step 11: Final Confirmation Test
Confirm that the problem symptom has gone and the engine is free from any abnormal conditions. If what has been repaired is related to the DTC, clear the DTC once, perform DTC confirmation procedure and confirm that no DTC is indicated.

Malfunction Indicator Lamp (MIL) Check

S7RW0A1104002

1) Turn ON ignition switch (with engine at stop) and check that MIL (1) lights.
   If MIL does not light up (or MIL dims) but engine can be starting, go to "Malfunction Indicator Lamp Does Not Come ON with Ignition Switch ON and Engine Stop (but Engine Can Be Started)" for troubleshooting.
   If MIL does not light with ignition switch ON and engine does not start though it is cranked up, go to "ECM Power and Ground Circuit Check".
2) Start engine and check that MIL turns OFF.
   If MIL remains ON and no DTC is stored in ECM, go to "Malfunction Indicator Lamp Remains ON after Engine Starts" for troubleshooting.

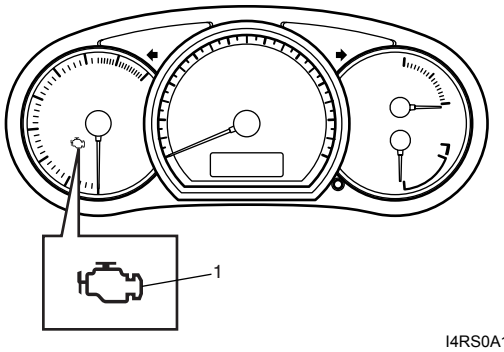

I4RS0A110012-01

DTC Check

S7RW0A1104003

NOTE

- **There are two types of OBD system depending on the vehicle specification. For identification, refer to "Precaution on On-Board Diagnostic (OBD) System".**
- **The MIL is turned on when the ECM and/or TCM detect malfunction(s). Each ECM and TCM stores diagnostic information as the diagnostic trouble code (DTC) in its memory and outputs the DTC to the scan tool.**
  Therefore, check both of the ECM and TCM for any DTC with the scan tool because the DTC stored in ECM and TCM is not read and displayed at a time. However, each of the ECM and TCM needs not to be checked with the generic scan tool because the DTC stored in ECM and TCM is read and displayed at a time.

1) Prepare CAN communication OBD generic scan tool or SUZUKI scan tool.

   Special tool
   (A): SUZUKI scan tool (SUZUKI-SDT)

2) With ignition switch OFF, connect it to DLC (1) located on underside of instrument panel at driver's seat side.

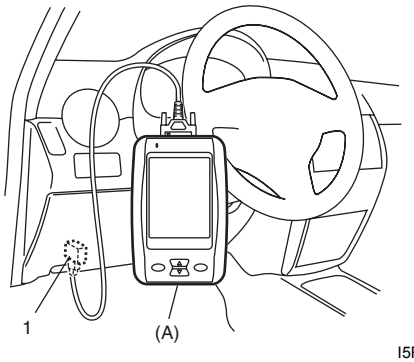

I5RW0C110011-01

3) Turn ignition switch ON and confirm that MIL lights.
4) Read DTC and freeze frame data according to instructions displayed on scan tool and print them or write them down. Refer to scan tool operator's manual for details.
   If communication between scan tool and ECM is not possible, go to "Troubleshooting for Communication Error with Scan Tool Using CAN".
5) After completing the check, turn ignition switch off and disconnect scan tool from DLC.

DTC Clearance

S7RW0A1104004

NOTE

There are two types of OBD system depending on the vehicle specification.
For identification, refer to "Precaution on On-Board Diagnostic (OBD) System".

1) Connect SUZUKI scan tool or CAN communication OBD generic scan tool to data link connector in the same manner as when making this connection for DTC check.
2) Turn ignition switch OFF and then ON.
3) Erase DTC and pending DTC according to instructions displayed on scan tool. Freeze frame data is cleared with the DTC. Refer to scan tool operator's manual for further details.
   If communication between scan tool and ECM is not possible, go to "Troubleshooting for Communication Error with Scan Tool Using CAN".
4) After completing the clearance, turn ignition switch OFF and disconnect scan tool from data link connector.

NOTE

DTC and freeze frame data stored in ECM memory are also cleared in the following cases. Be careful not to clear them before keeping their record.

- **When power to ECM is cut off (by disconnecting battery cable, removing fuse or disconnecting ECM connectors).**
- **When the same malfunction (DTC) is not detected again during 40 engine warm-up cycles. (See "Warm-Up Cycle" of "On-Board Diagnostic System Description".)**

Troubleshooting for Communication Error with Scan Tool Using CAN

S7RW0A1104005

Perform this troubleshooting when it is not possible to communicate between scan tool and ECM/TCM.

NOTE

- **When performing this troubleshooting, be sure to have full understanding of "Precaution on CAN Troubleshooting" and observe it.**
- **It may be possible that CAN system has trouble because of fuse blown or low battery voltage. Before troubleshooting, check to make sure that fuse, battery voltage and generator status are normal.**
- **When disconnecting each control module connector in this troubleshooting, various DTCs will be detected. Be sure to clear DTCs in the following control modules after completing this troubleshooting.**
  - **ECM**
  - **BCM**
  - **TCM**
  - **Keyless start control module**
  - **ESP® control module**
  - **4WD control module**
  - **HVAC control module (Auto A/C model)**
  - **P/S control module**

Wiring Diagram

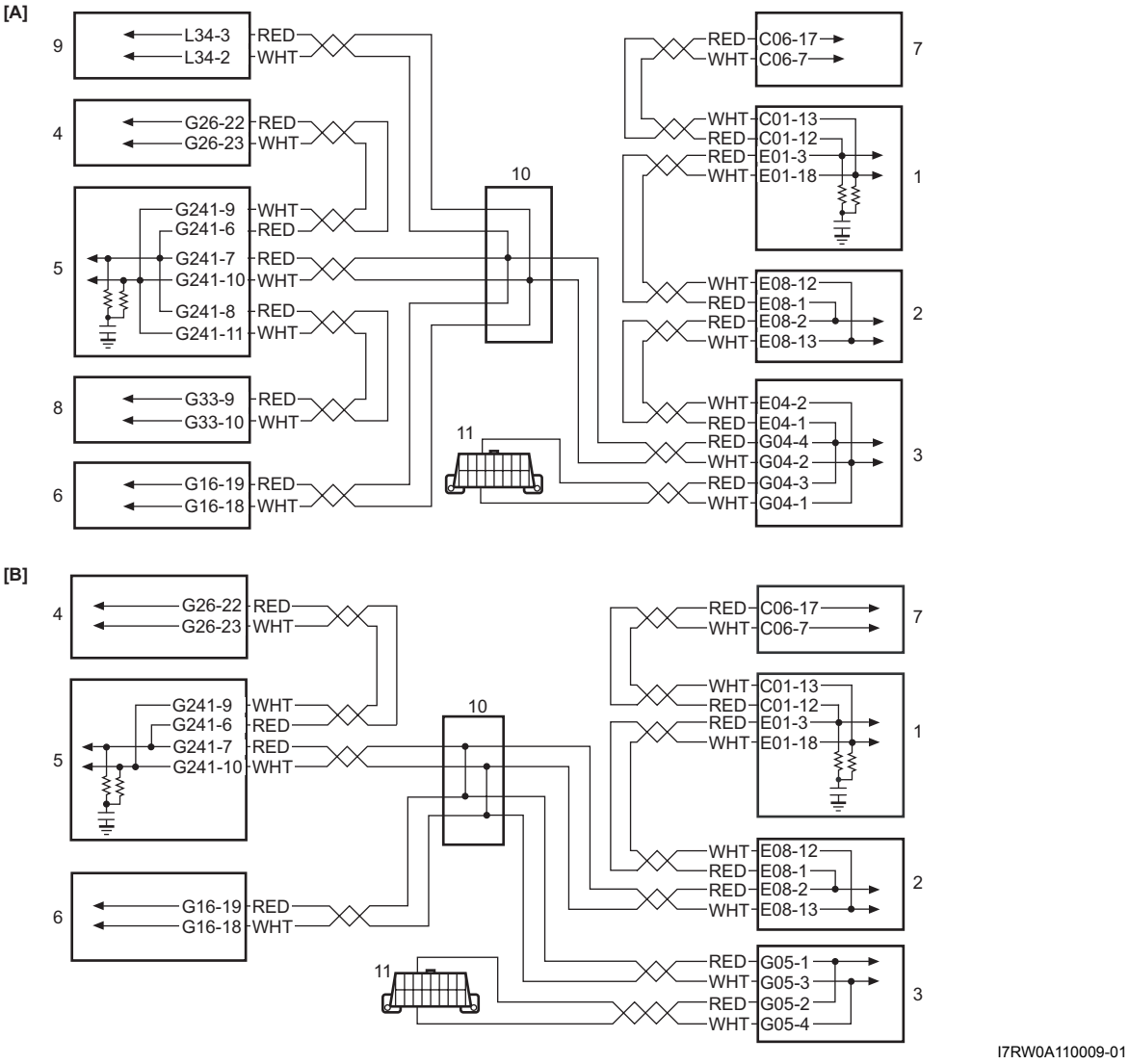

I7RW0A110009-01

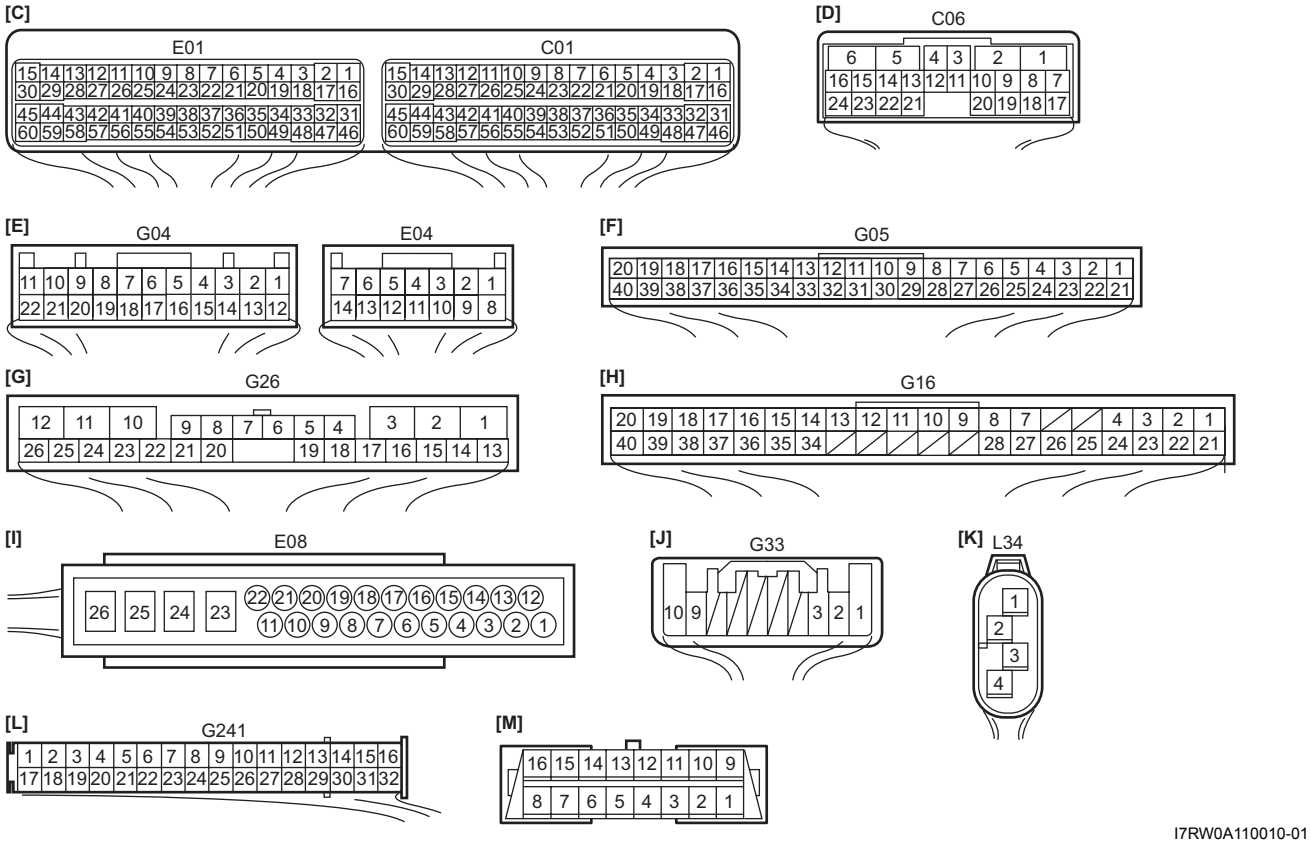

I7RW0A110010-01

[A]:	Non-Taiwan model	1.	ECM
[B]:	Taiwan model	2.	ABS / ESP® control module
[C]:	ECM connector (viewed from harness side)	3.	BCM
[D]:	TCM connector (viewed from harness side)	4.	4WD control module
[E]:	BCM connector (viewed from harness side) (Non-Taiwan model)	5.	Combination meter
[F]:	BCM connector (viewed from harness side) (Taiwan model)	6.	Keyless start control module
[G]:	4WD control module connector (viewed from harness side)	7.	TCM
[H]:	Keyless start control module connector (viewed from harness side)	8.	Steering angle sensor (ESP® model)
[I]:	ABS / ESP® control module connector (viewed from terminal side)	9.	Yaw rate / G sensor (ESP® model)
[J]:	Steering angle sensor connector (viewed from harness side)	10.	CAN junction connector
[K]:	Yaw rate / G sensor connector (viewed from harness side)	11.	DLC
[L]:	Combination meter connector (viewed from terminal side)		
[M]:	DLC connector (viewed from terminal side)		

Trouble area

- Scan tool
- Connector related to CAN line (included in DLC)
- CAN line
- Power or ground circuit of DLC
- Control module communicated by CAN
  - ECM
  - TCM
  - ABS / ESP® control module
  - BCM
  - Combination meter
  - Keyless start control module
  - 4WD control module
- Sensor communicated by CAN
  - Steering angle sensor (ESP® model)
  - Yaw rate / G sensor (ESP® model)
- Power or ground circuit of control module communicated by CAN
- Power or ground circuit of sensor communicated by CAN

Troubleshooting

Step	Action	Yes	No
1	**Scan tool check** 1) Disconnect scan tool from DLC with ignition switch turned OFF. 2) Check for proper connection to all terminals of scan tool connector. 3) If OK, connect scan tool to another vehicle of this type with ignition switch turned OFF. 4) Check communication between scan tool and ECM by DTC check in ECM. *Is it possible to check DTC in ECM?*	Go to Step 2.	Scan tool faulty. Refer to its operator's manual.
2	**DLC power circuit check** 1) Check for proper connection to all DLC (1) terminals with ignition switch turned OFF. 2) If OK, measure voltage between +B terminal (2) of DLC and vehicle body ground with ignition switch turned to ON position. 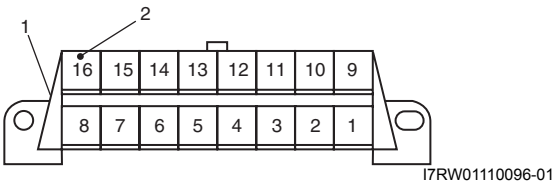 *Is voltage 10 – 14 V?*	Go to Step 3.	Repair power circuit.
3	**DLC ground circuit check** 1) Ignition switch turn to OFF position. 2) Check DLC (1) ground circuits as follows. • Measure resistance between signal ground terminal (2) of DLC and vehicle body ground. • Measure resistance between body ground terminal (3) of DLC and vehicle body ground. 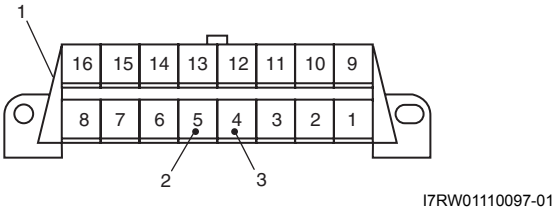 *Is resistance 1 Ω or less?*	Go to Step 4.	Repair ground circuit(s).
4	**DTC Check** 1) Turn ignition switch to OFF position. 2) Connect scan tool to DLC. 3) Check DTC in the following control modules that communicate with scan tool by K-line. • ESP® control module • BCM • Keyless start control module • 4WD control module *Is there any DTC other than CAN-DTC?*	Go to applicable troubleshooting of DTC other than CAN-DTC.	Go to Step 5.

Step	Action	Yes	No
5	**CAN line check between DLC and BCM** 1) Turn ignition switch to OFF position. 2) Disconnect BCM connector from BCM. 3) Check for proper connection to all terminals of BCM connector. 4) If OK, check CAN lines between DLC and BCM connector for open, short to power circuit, short to ground circuit, short to other CAN line and high resistance. *Are CAN lines between DLC and BCM connector in good condition?*	Go to Step 6.	Repair CAN line.
6	**Control module connector check** 1) Turn ignition switch to OFF position. 2) Disconnect all the following control module / sensor connectors. • Control modules communicated by CAN – ECM – TCM – ABS / ESP® control module – BCM – Combination meter – Keyless start control module – 4WD control module • Sensor communicated by CAN – Steering angle sensor (ESP® model) – Yaw rate / G sensor (ESP® model) 3) Check for proper connection to each CAN line terminal of all control module / sensor (communicated by CAN) connectors. 4) If OK, connect connectors of all control module/sensor communicated by CAN securely. 5) Check communication between scan tool and ECM/TCM by DTC check in ECM/TCM. *Is it possible to check DTC in ECM and TCM?*	Intermittent trouble. Check for intermittent referring to “Intermittent and Poor Connection Inspection in Section 00”.	Go to Step 7.

Step	Action	Yes	No
7	**CAN line check** 1) Turn ignition switch to OFF position. 2) Disconnect connectors of all control module / sensor communicated by CAN. 3) Check all the following CAN lines for open, short to power circuit, short to ground circuit, short to other CAN line and high resistance. • Between BCM connector and ABS / ESP® control module connector • Between ABS / ESP® control module connector and ECM connector • Between ECM connector and TCM connector • Between BCM connector and keyless start control module connector • Between BCM connector and yaw rate / G sensor connector • Between combination meter connector and steering angle sensor connector • Between combination meter connector and 4WD control module connector • Between BCM connector and combination meter connector *Are all CAN lines in good condition?*	Go to Step 8.	Repair CAN line.
8	**Communication check between scan tool and ECM** 1) Turn ignition switch to OFF position. 2) Connect ECM, BCM, ABS / ESP® control module and combination meter connectors. 3) Check communication between scan tool and ECM by DTC check in ECM. *Is it possible to check DTC in ECM?*	A/T model: Go to Step 9. M/T model: Substitute a known-good ECM and recheck.	Go to Step 4 through Step 11 of “Troubleshooting for CAN-DTC”.
9	**Communication check between scan tool and TCM** 1) Turn ignition switch to OFF position. 2) Connect TCM connectors. 3) Check communication between scan tool and TCM by DTC check in TCM. *Is it possible to check DTC in TCM?*	Identify malfunction control module by performing Step 13 through Step 16 of “Troubleshooting for CAN-DTC”.	Go to Step 10.
10	**Internal circuit check in ECM** 1) Turn ignition switch to OFF position and then disconnect negative (–) cable at battery. 2) Disconnect TCM connectors. 3) Measure resistance between the followings • Between CAN High terminal on DLC and “C06-17” terminal on TCM connector • Between CAN Low terminal on DLC and “C06-7” terminal on TCM connector *Is each resistance 0 – 1 Ω?*	Substitute a known-good TCM and recheck.	Substitute a known-good ECM and recheck.

DTC Table

S7RW0A1104006

NOTE

- **There are two types of OBD system depending on the vehicle specification.**
  For identification, refer to "Precaution on On-Board Diagnostic (OBD) System".
- **For non-Euro-OBD model, some of DTC No. with delta (△) mark in the following table can not be detected by ECM depending on vehicle specification.**
- **With the CAN communication generic scan tool, only star (*) marked DTC No. in the following table can be read.**
- **1 driving cycle: MIL lights up when DTC is detected during 1 driving cycle.**
- **2 driving cycles: MIL lights up when the same DTC is detected also in the next driving cycle after DTC is detected and stored temporarily in the first driving cycle.**
- ***2 driving cycles:**
  MIL blinks or lights up. Refer to "DTC P0300 / P0301 / P0302 / P0303 / P0304: Random Misfire Detected / Cylinder 1 / Cylinder 2 / Cylinder 3 / Cylinder 4 Misfire Detected" for details.

DTC No.	Detecting item	Detecting condition (DTC will set when detecting:)	MIL
☞ *P0010	Camshaft position actuator circuit (for engine with VVT system)	Oil control valve circuit open or short.	1 driving cycle
☞ *P0011	Camshaft position – timing over-advanced or system performance (for engine with VVT system)	Actual value of advanced valve timing does not reach target value, or valve timing is advanced although ECM command is most retarding.	2 driving cycles
☞ *P0012	Camshaft position – timing over-retarded (for engine with VVT system)		2 driving cycles
☞ *P0031	HO2S heater control circuit low (Sensor-1)	Heater current is less than specification while heater ON.	2 driving cycles
☞ *P0032	HO2S heater control circuit high (Sensor-1)	Heater current is more than specification while heater ON.	2 driving cycles
☞ △*P0037	HO2S heater control circuit low (Sensor-2)	Heater current is less than specification while heater ON.	2 driving cycles
☞ △*P0038	HO2S heater control circuit high (Sensor-2)	Heater current is more than specification while heater ON.	2 driving cycles
☞ △*P0101	Mass air flow circuit range/ performance	MAF sensor volume is more than specification or less than specification.	2 driving cycles
☞ *P0102	Mass air flow circuit low input	Output voltage of MAF sensor is less than specification.	1 driving cycle
☞ *P0103	Mass air flow circuit high input	Output voltage of MAF sensor is more than specification.	1 driving cycle
☞ △*P0106	Manifold absolute pressure circuit range/performance	Difference between Max. manifold absolute pressure value and Min. manifold pressure value is less than specification or difference between barometric pressure value and manifold pressure value is less than specification	2 driving cycles
☞ △*P0107	Manifold absolute pressure circuit low input	Output voltage of MAP sensor is less than specification.	1 driving cycle
☞ △*P0108	Manifold absolute pressure circuit high input	Output voltage of MAP sensor is more than specification.	1 driving cycle
☞ △*P0111	Intake air temperature sensor circuit range/performance	Variation of intake air temperature from engine start is less than specification.	2 driving cycles
☞ *P0112	Intake air temperature sensor circuit low	Circuit voltage of IAT sensor is less than specification.	1 driving cycle
☞ *P0113	Intake air temperature sensor circuit high	Circuit voltage of IAT sensor is more than specification.	1 driving cycle
☞ △*P0116	Engine coolant temperature circuit range/performance	Engine coolant temperature is less than specified temperature for specified time from engine start.	2 driving cycles

DTC No.	Detecting item	Detecting condition (DTC will set when detecting:)	MIL
☞ *P0117	Engine coolant temperature circuit low	Circuit voltage of ECT sensor is less than specification.	1 driving cycle
☞ *P0118	Engine coolant temperature circuit high	Circuit voltage of ECT sensor is more than specification.	1 driving cycle
☞ *P0122	Throttle position sensor (main) circuit low	Output voltage of throttle position sensor (main) is lower than specification.	1 driving cycle
☞ *P0123	Throttle position sensor (main) circuit high	Output voltage of throttle position sensor (main) is higher than specification.	1 driving cycle
☞ △*P0131	O2 sensor (HO2S) circuit low voltage (Sensor-1)	Max. output voltage of HO2S-1 is less than specification.	2 driving cycles
☞ △*P0132	O2 sensor (HO2S) circuit high voltage (Sensor-1)	Min. output voltage of HO2S-1 is more than specification.	2 driving cycles
☞ △*P0133	O2 sensor (HO2S) circuit slow response (Sensor-1)	Response time of HO2S-1 output voltage between rich and lean is longer than specification.	2 driving cycles
☞ *P0134	O2 sensor (HO2S) circuit no activity detected (Sensor-1)	Output voltage of HO2S-1 is more than specification or less than specification. (or HO2S-1 circuit open or short)	2 driving cycles
☞ △*P0137	O2 sensor (HO2S) circuit low voltage (Sensor-2)	Output voltage of HO2S-2 is less than specification while engine is idling after driving with high engine load and Max. output voltage of HO2S-2 minus Min. output voltage of HO2S-2 is less than specification.	2 driving cycles
☞ △*P0138	O2 sensor (HO2S) circuit high voltage (Sensor-2)	Output voltage of HO2S-2 is more than specification while engine is idling after driving with high engine load and Max. output voltage of HO2S-2 minus Min. output voltage of HO2S-2 is less than specification.	2 driving cycles
☞ △*P0140	O2 sensor (HO2S) circuit no activity detected (Sensor-2)	Output voltage of HO2S-2 is more than specification after warming up engine.	2 driving cycles
☞ △*P0171	System too lean	Total fuel trim is larger than specification for specified time or longer. (Fuel trim toward rich side is large.)	2 driving cycles
☞ △*P0172	System too rich	Total fuel trim is smaller than specification for specified time or longer. (Fuel trim toward lean side is large.)	2 driving cycles
☞ *P0222	Throttle position sensor (sub) circuit low	Output voltage of throttle position sensor (sub) is lower than specification.	1 driving cycle
☞ *P0223	Throttle position sensor (sub) circuit high	Output voltage of throttle position sensor (sub) is higher than specification.	1 driving cycle
☞ △*P0300	Random misfire detected	Misfire of such level as to cause damage to three way catalyst or misfire of such level as to deteriorate emission.	*2 driving cycles
☞△*P0301 / △*P0302 / △*P0303 / △*P0304	Cylinder 1 misfire detected Cylinder 2 misfire detected Cylinder 3 misfire detected Cylinder 4 misfire detected		
☞ *P0327	Knock sensor circuit low	Output voltage of knock sensor is less than specification.	1 driving cycle
☞ *P0328	Knock sensor circuit high	Output voltage of knock sensor is more than specification.	1 driving cycle
☞ *P0335	Crankshaft position sensor circuit	No signal of CKP sensor for specified time even if starting motor signal is input.	1 driving cycle
☞ *P0340	Camshaft position sensor circuit	CMP sensor pulse is out of specification.	1 driving cycle
☞ △*P0401	Exhaust gas recirculation flow detected as insufficient	Difference in intake manifold absolute pressure between opened EGR valve and closed EGR valve is less than specification.	2 driving cycles
☞ △*P0402	Exhaust gas recirculation flow detected as excessive	Difference in intake manifold absolute pressure between opened EGR valve and closed EGR valve is more than specification.	2 driving cycles
☞ △*P0403	Exhaust gas recirculation control circuit	Output voltage is different from output command with more than one pole out of 4 poles.	1 driving cycle

DTC No.	Detecting item	Detecting condition (DTC will set when detecting:)	MIL
☞ △*P0420	Catalyst system efficiency below threshold	Output waveforms of HO2S-1 and HO2S-2 are similar.	2 driving cycles
☞ △*P0443	Evaporative emission system purge control valve circuit	Monitor signal of EVAP canister purge valve is different from command signal. (circuit open or shorted to ground)	2 driving cycles
☞ P0462	Fuel level sensor circuit low	Circuit voltage of fuel level sensor is less than specification.	—
☞ P0463	Fuel level sensor circuit high	Circuit voltage of fuel level sensor is more than specification.	—
☞ △*P0480	Fan 1 control circuit	Monitor signal of radiator cooling fan relay is different from command signal.	1 driving cycle
☞ △P0481	Fan 2 control circuit	Monitor signal of A/C condenser cooling fan relay is different from command signal.	—
☞ *P0500	Vehicle speed sensor	No VSS signal during fuel cut for specified time or longer.	2 driving cycles
☞ P0532	A/C refrigerant pressure sensor circuit low	Output voltage of A/C refrigerant pressure sensor is less than specification.	—
☞ P0533	A/C refrigerant pressure sensor circuit high	Output voltage of A/C refrigerant pressure sensor is more than specification.	—
☞ *P0601	Internal control module memory check sum error	Data write error or check sum error.	1 driving cycle
☞ P0602	Control module programming error	Data programming error.	1 driving cycle
☞ *P0607	Control module performance	Data programming error.	1 driving cycle
☞ △*P0616	Starter relay circuit low	Starter signal is low voltage even though engine is started with vehicle at stop.	2 driving cycles
☞ △*P0617	Starter relay circuit high	Starter signal is high voltage for specified time while engine is running.	2 driving cycles
☞ *P1510	ECM backup power supply malfunction	Backup power voltage is out of specification after starting engine.	1 driving cycle
☞ *P2101	Throttle actuator control motor circuit range/performance	Monitor signal of throttle actuator output (duty output) is inconsistent with throttle actuator control command.	1 driving cycle
☞ *P2102	Throttle actuator control motor circuit low	Power supply voltage of throttle actuator control circuit is lower than specification even if throttle actuator control relay turned on.	1 driving cycle
☞ *P2103	Throttle actuator control motor circuit high	Power supply voltage of throttle actuator control circuit is higher than specification even if throttle actuator control relay turned off.	1 driving cycle
☞ *P2111	Throttle actuator control system – stuck open	Throttle valve default opening is greater than 8° from complementary closed position when diagnosing throttle valve at ignition switch turned OFF.	1 driving cycle
☞ *P2119	Throttle actuator control throttle body range/performance	Difference between actual throttle valve opening angle and opening angle calculated by ECM is more than specification.	1 driving cycle
☞ *P2122	Pedal position sensor (main) circuit low input	Output voltage of pedal position sensor (main) is lower than specification.	1 driving cycle
☞ *P2123	Pedal position sensor (main) circuit high input	Output voltage of pedal position sensor (main) is higher than specification.	1 driving cycle
☞ *P2127	Pedal position sensor (sub) circuit low input	Output voltage of pedal position sensor (sub) is lower than specification.	1 driving cycle
☞ *P2128	Pedal position sensor (sub) circuit high input	Output voltage of pedal position sensor (sub) is higher than specification.	1 driving cycle
☞ *P2135	Throttle position sensor (main / sub) voltage correlation	Difference between the opening angle based on throttle position sensor (main) and the opening angle based on throttle position sensor (sub) is more than specification.	1 driving cycle

DTC No.	Detecting item	Detecting condition (DTC will set when detecting:)	MIL
☞ *P2138	Pedal position sensor (main / sub) voltage correlation	Difference between the opening angle based on accelerator pedal position sensor (main) and the opening angle based on accelerator pedal position sensor (sub) is more than specification.	1 driving cycle
☞ △*P2227	Barometric pressure circuit range/ performance	Difference of barometric pressure value and intake manifold pressure value is more than specification at engine start.	2 driving cycles
☞ *P2228	Barometric pressure circuit low	Barometric pressure sensor voltage is less than specification.	1 driving cycle
☞ *P2229	Barometric pressure circuit high	Barometric pressure sensor voltage is more than specification.	1 driving cycle
☞ U0073	Control Module Communication Bus Off	Transmission error that is inconsistent between transmission data and transmission monitor (CAN bus monitor) data is detected more than 30 times continuously.	—
☞ *U0101	Lost Communication With Transmission Control Module	Reception error of communication data for TCM is detected for longer than specified time continuously.	1 driving cycle
☞ *U0121	Lost Communication ESP® Control Module / Anti-Lock Brake System (ABS) Control Module	Reception error of communication data for ESP® control module or ABS / ESP® control module is detected for longer than specified time continuously.	1 driving cycle
☞U0140	Lost Communication With Body Control Module	Reception error of communication data for BCM is detected for longer than specified time continuously.	—
P1614	Transponder response error	Refer to “DTC Table in Section 10C”.	—
P1615	ID code does not registered (vehicle equipped with keyless start system only)		—
P1616	Different registration ID codes (vehicle equipped with keyless start system only)		—
P1618	CAN communication error (reception error for keyless start control module) (vehicle equipped with keyless start system only)		—
P1621	Immobilizer communication line error		—
P1622	EEPROM error		—
P1623	Unregistered transponder		—
P1625	Immobilizer antenna error		—
P1636	Immobilizer information registration failure		—
P1638	Immobilizer information mismatched		—

For Vehicle Equipped with A/T

NOTE

There are two types of OBD system depending on the vehicle specification.
For identification, refer to "Precaution on On-Board Diagnostic (OBD) System".

When using CAN communication OBD generic scan tool, not only the previous star (*) marked ECM DTC(s) but also the following DTC(s) is displayed on CAN communication OBD generic scan tool simultaneously.

DTC No.	Detecting item	Detecting condition (DTC will set when detecting)
*P0705	Transmission range sensor circuit malfunction (PRNDL input)	Refer to "DTC Table in Section 5A".
*P0707	Transmission range sensor circuit low	
*P0711	Transmission fluid temperature sensor "A" circuit range/ performance	
*P0712	Transmission fluid temperature sensor circuit low	
*P0713	Transmission fluid temperature sensor circuit high	
*P0717	Input/Turbine speed sensor circuit no signal	
*P0722	Output speed sensor (VSS) circuit no signal	
*P0741	Torque converter clutch circuit performance or stuck off	
*P0742	Torque converter clutch circuit stuck on	
*P0751	Shift solenoid-A (No.1) performance or stuck off	
*P0752	Shift solenoid-A (No.1) stuck on	
*P0756	Shift solenoid-B (No.2) performance or stuck off	
*P0757	Shift solenoid-B (No.2) stuck on	
*P0787	Shift/Timing solenoid control circuit low	
*P0788	Shift/Timing solenoid control circuit high	
*P0961	Pressure control solenoid "A" control circuit range/performance	
*P0962	Pressure control solenoid control circuit low	
*P0963	Pressure control solenoid control circuit high	
*P0973	Shift solenoid-A (No.1) control circuit low	
*P0974	Shift solenoid-A (No.1) control circuit high	
*P0976	Shift solenoid-B (No.2) control circuit low	
*P0977	Shift solenoid-B (No.2) control circuit high	
*P1702	Internal control module memory check sum error	
*P1723	Range select switch malfunction	
*P1878	Torque converter clutch shudder	
*P2762	Torque converter clutch (TCC) pressure control solenoid control circuit range/performance	
*P2763	Torque converter clutch pressure control solenoid control circuit high	
*P2764	Torque converter clutch pressure control solenoid control circuit low	
U0100	Lost communication with ECM/PCM "A"	

Fail-Safe Table

S7RW0A1104008

When any of the following DTCs is detected, ECM enters fail-safe mode as long as malfunction continues to exist but that mode is cancelled when ECM detects normal condition after that.

DTC No.	Detected item	Fail-safe operation
☞ P0102	Mass air flow circuit low input	• ECM controls injector drive time (fuel injection volume) according to throttle valve opening (closed throttle position or not). • ECM stops EGR control.
☞ P0103	Mass air flow circuit high input	
☞ P0112	Intake air temperature sensor circuit low	ECM controls actuators assuming that intake air temperature is 20 °C (68 °F).
☞ P0113	Intake air temperature sensor circuit high	
☞ P0117	Engine coolant temperature circuit low	• ECM controls actuators assuming that engine coolant temperature is 80 °C (176 °F). • ECM operates radiator cooling fan.
☞ P0118	Engine coolant temperature circuit high	

DTC No.	Detected item	Fail-safe operation
☞ P0122	Throttle position sensor (main) circuit low	• ECM turns off throttle actuator control relay and throttle valve is fixed at the opening of about 7° from its completely closed position (default opening). • ECM controls fuel cut at specified engine speed. • ECM stops air/fuel ratio control.
☞ P0123	Throttle position sensor (main) circuit high	• ECM turns off throttle actuator control relay and throttle valve is fixed at the opening of about 7° from its completely closed position (default opening). • ECM controls fuel cut at specified engine speed. • ECM stops air/fuel ratio control.
☞ P0222	Throttle position sensor (sub) circuit low	
☞ P0223	Throttle position sensor (sub) circuit high	
☞ P0335	Crankshaft position sensor circuit	• Ignition timing is fixed.
☞ P0340	Camshaft position sensor circuit	ECM changes injection control system from sequential injection to simultaneous one.
☞ P0500	Vehicle speed sensor	• ECM controls actuators assuming that vehicle speed is 0 km/h (0 mile/h). • ECM stops IAC feedback control.
☞ P2101	Throttle actuator control motor circuit range / performance)	• ECM turns off throttle actuator control relay and throttle valve is fixed at the opening of about 7° from its completely closed position (default opening). • ECM controls fuel cut at specified engine speed.
☞ P2102	Throttle actuator control motor circuit low	
☞ P2103	Throttle actuator control motor circuit high	ECM controls fuel cut at specified engine speed.
☞ P2111	Throttle actuator control system – stuck open)	• ECM turns off throttle actuator control relay and throttle valve is fixed at the opening of about 7° from its completely closed position (default opening). • ECM controls fuel cut at specified engine speed.
☞ P2119	Throttle actuator control throttle body range / performance)	• ECM turns off throttle actuator control relay and throttle valve is fixed at the opening of about 7° from its completely closed position (default opening). • ECM controls fuel cut at specified engine speed.
☞ P2122	Pedal position sensor (main) circuit low input)	• ECM turns off throttle actuator control relay and throttle valve is fixed at the opening of about 7° from its completely closed position (default opening). • ECM controls fuel cut at specified engine speed.
☞ P2123	Pedal position sensor (main) circuit high input)	
☞ P2127	Pedal position sensor (sub) circuit low input)	
☞ P2128	Pedal position sensor (sub) circuit high input)	
☞ P2135	Throttle position sensor (main) / (sub) voltage correlation)	
☞ P2138	Pedal position sensor (main) / (sub) voltage correlation)	
☞ P2228	Barometric pressure circuit low	ECM controls actuators assuming that barometric pressure is 101.33 kPa (762 mmHg).
☞ P2229	Barometric pressure circuit high	

Scan Tool Data

S7RW0A1104009

As the data values are standard values estimated on the basis of values obtained from the normally operating vehicles by using a scan tool, use them as reference values. Even when the vehicle is in good condition, there may be cases where the checked value does not fall within each specified data range. Therefore, judgment as abnormal should not be made by checking with these data alone.
Also, conditions that can be checked by the scan tool are those detected by ECM and output from ECM as commands and there may be cases where the engine or actuator is not operating (in the condition) as indicated by the scan tool. Be sure to use the timing light to check the ignition timing.

NOTE

- **There are two types of OBD system depending on the vehicle specification.**
  For identification, refer to "Precaution on On-Board Diagnostic (OBD) System".
- **With the CAN communication generic scan tool, only star (*) marked data in the following table can be read.**
- **When checking the data with the engine running at idle or racing, be sure to shift M/T gear to the neutral position and A/T gear to the "Park" position and pull the parking brake fully. Also, if nothing or "no load" is indicated, turn OFF A/C (if equipped with A/C), all electric loads, P/S and all the other necessary switches.**

	Scan tool data	Vehicle condition		Normal condition / reference values
*	☞ COOLANT TEMP (ENGINE COOLANT TEMP.)	At specified idle speed after warming up		80 – 100 °C, 176 – 212 °F
*	☞ INTAKE AIR TEMP.	At specified idle speed after warming up		–5 °C (23 °F) + environmental temp. to 40 °C (104 °F) + environmental temp.
*	☞ ENGINE SPEED	It idling with no load after warming up		Desired idle speed ± 50 rpm
	☞ DESIRED IDLE (DESIRED IDLE SPEED)	It idling with radiator cooling fan stopped and all electrical parts turned OFF after warming up, M/T at neutral		700 rpm
*	☞ MAF (MASS AIR FLOW RATE)	At specified idle speed with no load after warming up		1.0 – 4.0 g/s 0.14 – 0.52 lb/min.
		At 2500 r/min. with no load after warming up		4.0 – 9.0 g/s 0.53 – 1.58 lb/min.
*	☞ CALC LOAD (CALCULATED LOAD VALUE)	At specified idle speed with no load after warming up		16 – 36%
		At 2500 r/min. with no load after warming up		10 – 30%
*	☞ MAP (INTAKE MANIFOLD ABSOLUTE PRESSURE) (if equipped)	At specified idle speed with no load after warming up		24 – 38 kPa, 7.1 – 11.2 in.Hg
*	☞ THROTTLE POSITION (RELATIVE THROTTLE POSITION)	Ignition switch ON / warmed up engine stopped	Accelerator pedal released	0 – 12%
			Accelerator pedal depressed fully	90 – 100%
*	☞ BAROMETRIC PRES	—		Barometric pressure is displayed
	☞ FUEL TANK LEVEL	Ignition switch ON		0 – 100%
*	☞ BATTERY VOLTAGE	Ignition switch ON / engine at stop		10 – 14 V
	☞ BRAKE SWITCH	Ignition switch ON	Brake pedal is released	OFF
			Brake pedal is depressed	ON
*	☞ FUEL SYSTEM B1 (FUEL SYSTEM STATUS)	At specified idle speed after warming up		CLSD (closed loop)
*	☞ O2S B1 S1 (HEATED OXYGEN SENSOR-1)	At specified idle speed after warming up		0.1 – 0.95 V
*	☞ O2S B1 S2 (HEATED OXYGEN SENSOR-2) (if equipped)	At 2000 r/min. for 3 min. or longer after warming up		0.1 – 0.95 V

	Scan tool data	Vehicle condition		Normal condition / reference values
*	☞ SHORT FT B1 (SHORT TERM FUEL TRIM)	At specified idle speed after warming up		–20 – +20%
*	☞ LONG FT B1 (LONG TERM FUEL TRIM)	At specified idle speed after warming up		–20 – +20%
	☞ TOTAL FUEL TRIM B1	At specified idle speed after warming up		–35 – +35%
	☞ FUEL CUT	Engine at fuel cut condition		ON
		Engine at other than fuel cut condition		OFF
	☞ O2S B1 S2 ACT (HEATED OXYGEN SENSOR-2) (if equipped)	At specified idle speed after warming up		ACTIVE
	☞ O2S B1 S1 ACT (HEATED OXYGEN SENSOR-1)	At specified idle speed after warming up		ACTIVE
*	☞ CANIST PRG DUTY (EVAP CANISTER PURGE FLOW DUTY)	At specified idle speed after warming up		0%
*	☞ IGNITION ADVANCE (IGNITION TIMING ADVANCE FOR NO.1 CYLINDER)	At specified idle speed with no load after warming up		5 – 15° BTDC
*	☞ EGR VALVE OPENING (if equipped)	At specified idle speed after warming up		0%
	☞ VVT GAP (TARGET-ACTUAL POSITION) (VVT model)	At specified idle speed after warming up		0 – 3°
	☞ FUEL PUMP	Within 2 seconds after ignition switch ON or engine running		ON
		Engine at stop with ignition switch ON		OFF
	☞ STARTER SW (STARTER SWITCH)	Ignition switch is turned to ST (engine cranking) position		ON
	☞ A/C PRESSURE (A/C REFERIGERANT ABSOLUTE PRESSURE)	Engine running	A/C ON (A/C is operating) at ambient temperature: 30 °C (86 °F) and humidity: 50%	1350 – 1650 kPa For more details, refer to pressure of high pressure gage under “A/C System Performance Inspection: Manual Type in Section 7B”.
			A/C OFF (A/C is not operating) at ambient temperature: 30 °C (86 °F) and engine coolant temperature: 90 – 100 °C (194 – 212 °F)	600 – 1000 kPa After longer than 10 min from A/C switch turned off
	☞ A/C SWITCH	Engine running after warming up, A/C not operating		OFF
		Engine running after warming up, A/C operating		ON
	☞ A/C COMP RELAY	Engine running	A/C switch and blower motor switch turned ON	ON
			A/C switch and blower motor switch turned OFF	OFF
	☞ BLOWER FAN	Ignition switch ON	Blower fan switch: 2nd speed position or more	ON
			Blower fan switch: under 1st speed position	OFF
	☞ ELECTRIC LOAD	Ignition switch ON / Headlight, small light, all turned OFF		OFF
		Ignition switch ON / Headlight, small light, all turned ON		ON

	Scan tool data	Vehicle condition		Normal condition / reference values
	☞ RADIATOR FAN (RADIATOR COOLING FAN CONTROL RELAY)	Ignition switch ON	Engine coolant temp.: lower than 97.5 °C (207.5 °F)	OFF
			Engine coolant temp.: 100 °C (212 °F)	ON
	☞ A/C COND FAN (A/C CONDENSER COOLING FAN CONTROL RELAY)	Engine running	Blower motor switch and A/C switch turned ON/ECT over 102.5 °C (216.5 °F)	ON
			Blower motor switch and/or A/C switch turned OFF	OFF
	☞ TP SENSOR 1 VOLT (THROTTLE POSITION SENSOR (MAIN) OUTPUT VOLTAGE)	Ignition switch ON after warmed up engine	Accelerator pedal released	0.48 – 0.90 V
			Accelerator pedal depressed fully	3.37 – 4.55 V
	☞ TP SENSOR 2 VOLT (THROTTLE POSITION SENSOR (SUB) OUTPUT VOLTAGE)	Ignition switch ON after warmed up engine	Accelerator pedal released	1.36 – 1.75 V
			Accelerator pedal depressed fully	3.58 – 4.76 V
	☞ APP SENSOR 1 VOLT (ACCELERATOR PEDAL POSITION (APP) SENSOR (MAIN) OUTPUT VOLTAGE)	Ignition switch ON after warmed up engine	Accelerator pedal released	0.69 – 0.81 V
			Accelerator pedal depressed fully	3.43 – 4.56 V
	☞ APP SENSOR 2 VOLT (ACCELERATOR PEDAL POSITION (APP) SENSOR (SUB) OUTPUT VOLTAGE)	Ignition switch ON after warmed up engine	Accelerator pedal released	0.31 – 0.44 V
			Accelerator pedal depressed fully	1.71 – 2.29 V
*	☞ ACCEL POSITION (RELATIVE ACCELERATOR PEDAL POSITION)	Ignition switch ON after warmed up engine	Accelerator pedal released	0 – 3%
			Accelerator pedal depressed fully	90 – 100%
*	☞ TARGET THROTTLE POSI (TARGET THROTTLE VALVE POSITION)	Ignition switch ON after warmed up engine	Accelerator pedal released	0 – 3%
			Accelerator pedal depressed fully	90 – 100%
	☞ IAC THROTTLE OPENING (IDLE AIR CONTROL THROTTLE VALVE OPENNING)	It idling with no load after warming up		5 – 25%
	☞ THROTTLE MOTOR VOLT	Ignition switch ON / engine at stop		10.0 – 14.0 V
	☞ CLOSED THROTTLE POS (CLOSED THROTTLE POSITION)	Throttle valve at idle position		ON
		Throttle valve opens larger than idle position		OFF
	☞ THROTTLE MOTOR RELAY	At specified idle speed after warming up		ON
*	☞ VEHICLE SPEED	At stop		0 km/h (0 mph)
	☞ INJ PULSE WIDTH (FUEL INJECTION PULSE WIDTH)	At specified idle speed with no load after warming up		1.5 – 3.5 msec.
		At 2500 r/min. no load after warming up		1.5 – 3.0 msec.

Scan Tool Data Definitions

COOLANT TEMP (ENGINE COOLANT TEMPERATURE, °C, °F)
It is detected by engine coolant temp. sensor.

INTAKE AIR TEMP. (°C, °F)
It is detected by intake air temp. sensor.

ENGINE SPEED (rpm)
It is computed by reference pulses from the camshaft position sensor.

DESIRED IDLE (DESIRED IDLE SPEED, rpm)
The Desired Idle Speed is an ECM internal parameter which indicates the ECM requested idle. If the engine is not running, this number is not valid.

MAF (MASS AIR FLOW RATE, g/s, lb/min.)
It represents total mass of air entering intake manifold which is measured by mass air flow sensor.

CALC LOAD (CALCULATED LOAD VALUE, %)
Engine load displayed as a percentage of maximum possible load. Value is calculated mathematically using the formula: actual (current) intake air volume ÷ maximum possible intake air volume × 100%

MAP (MANIFOLD ABSOLUTE PRESSURE, in.Hg, kPa)
This value indicates how much correction is necessary to keep the air/fuel mixture stoichiometrical.
It is detected by manifold absolute pressure sensor.

THROTTLE POS (RELATIVE THROTTLE POSITION, %)
When throttle position sensor is at fully closed position, throttle opening is indicated as 0 – 12% and 90 – 100% full open position.

BAROMETRIC PRESS (kPa, in.Hg)
This parameter represents a measurement of barometric air pressure and is used for altitude correction of the fuel injection quantity.

FUEL TANK LEVEL (%)
This parameter indicates approximate fuel level in fuel tank. As detectable range of fuel level sensor is set as 0 to 100%, however, with some models whose fuel tank capacity is smaller, indicated fuel level may be only 70% even when fuel tank is full.

BATTERY VOLTAGE (V)
This parameter indicates battery positive voltage inputted from main relay to ECM.

BRAKE SW (ON/OFF)
This parameter indicates the state of the brake switch.

FUEL SYSTEM B1 (FUEL SYSTEM STATUS)
Air/fuel ratio feedback loop status displayed as one of the followings.
OPEN: Open-loop has not yet satisfied conditions to go closed loop.
CLOSED: Closed-loop using oxygen sensor(s) as feedback for fuel control.
OPEN-DRIVE COND: Open-loop due to driving conditions (Power enrichment, etc.).
OPEN SYS FAULT: Open-loop due to detected system fault.

O2S SENSOR B1 S1 (HEATED OXYGEN SENSOR-1, V)
It indicates output voltage of HO2S-1 installed on exhaust manifold (pre-catalyst.)

O2S SENSOR B1 S2 (HEATED OXYGEN SENSOR-2, V)
It indicates output voltage of HO2S-2 installed on exhaust pipe (post-catalyst). It is used to detect catalyst deterioration.

SHORT FT B1 (SHORT TERM FUEL TRIM, %)
Short term fuel trim value represents short term corrections to the air/fuel mixture computation. A value of 0 indicates no correction, a value greater than 0 means an enrichment correction, and a value less than 0 implies an enleanment correction.

LONG FT B1 (LONG TERM FUEL TRIM, %)
Long term fuel trim value represents long term corrections to the air/fuel mixture computation. A value of 0 indicates no correction, a value greater than 0 means an enrichment correction, and a value less than 0 implies an enleanment correction.

TOTAL FUEL TRIM B1 (%)
The value of Total Fuel Trim is obtained by calculating based on values of Short Term Fuel Trim and Long Term Fuel Trim. This value indicates how much correction is necessary to keep the air/fuel mixture stoichiometrical.

FUEL CUT (ON/OFF)
ON: Fuel being cut (output signal to injector is stopped)
OFF: Fuel not being cut

O2S B1 S2 ACT (HEATED OXYGEN SENSOR-2, ACTIVE / INACTIVE)
This parameter indicates activation condition of HO2S-2
ACTIVE: Activating
INACTIVE: warming up or at stop

O2S B1 S1 ACT (HEATED OXYGEN SENSOR-1, ACTIVE / INACTIVE)
This parameter indicates activation condition of HO2S-1
ACTIVE: Activating
INACTIVE: warming up or at stop

CANIST PRG DUTY (EVAP CANISTER PURGE FLOW DUTY, %)
This parameter indicates valve ON (valve open) time rate within a certain set cycle of EVAP canister purge valve which controls the amount of EVAP purge.

IGNITION ADVANCE (IGNITION TIMING ADVANCE FOR NO.1 CYLINDER, °)
Ignition timing of No.1 cylinder is commanded by ECM. The actual ignition timing should be checked by using the timing light.

EGR VALVE OPENING (%)
This parameter indicates opening rate of EGR valve which controls the amount of EGR flow.

VVT GAP (TARGET-ACTUAL POSITION, °) (VVT model)
It is calculated using the formula: target valve timing advance – actual valve timing advance.

FUEL PUMP (ON/OFF)
ON is displayed when ECM activates the fuel pump via the fuel pump relay switch.

STARTER SW (STARTER SWITCH, ON/OFF)
This parameter indicates condition of starting motor relay output.
ON: Starting motor relay is ON
OFF: Starting motor relay is OFF

A/C PRESSURE (A/C REFRIGERANT ABSOLUTE PRESSURE, kPa)
This parameter indicates A/C refrigerant absolute pressure calculated by ECM.

A/C SWITCH (ON/OFF)
ON: Command for A/C operation being output from ECM to HVAC.
OFF: Command for A/C operation not being output.

A/C COMP RELAY (A/C COMPRESSOR RELAY, ON/OFF)
This parameter indicates the state of the A/C switch.

BLOWER FAN (ON/OFF)
This parameter indicates the state of the blower fan motor switch.

ELECTRIC LOAD (ON/OFF)
ON: Headlight or small light ON signal inputted.
OFF: Above electric loads all turned OFF.

RADIATOR COOLING FAN (RADIATOR COOLING FAN CONTROL RELAY, ON/OFF)
ON: Command for radiator cooling fan control relay operation being output.
OFF: Command for relay operation not being output.

A/C COND FAN (A/C CONDENSER COOLING FAN CONTROL RELAY, ON/OFF)
ON: Command for A/C condenser cooling fan control relay operation being output.
OFF: Command for relay operation not being output.

TP SENSOR 1 VOLT (THROTTLE POSITION SENSOR (MAIN) OUTPUT VOLTAGE, V)
The Throttle Position Sensor (Main) reading provides throttle valve opening information in the form of voltage.

TP SENSOR 2 VOLT (THROTTLE POSITION SENSOR (SUB) OUTPUT VOLTAGE, V)
The Throttle Position Sensor (Sub) reading provides throttle valve opening information in the form of voltage.

APP SENSOR 1 VOLT (ACCELERATOR PEDAL POSITION (APP) SENSOR (MAIN) OUTPUT VOLTAGE, V)
The Accelerator Pedal Position (APP) Sensor (Main) reading provides accelerator pedal opening information in the form of voltage.

APP SENSOR 2 VOLT (ACCELERATOR PEDAL POSITION (APP) SENSOR (SUB) OUTPUT VOLTAGE, V)
The Accelerator Pedal Position (APP) Sensor (Sub) reading provides accelerator pedal opening information in the form of voltage.

ACCEL POSITION (RELATIVE ACCELERATOR PEDAL POSITION, %)
When accelerator pedal is at fully released position, accelerator pedal is indicated as 0 – 3% and 90 – 100% fully depressed position.

TARGET THROTTLE POSI (TARGET THROTTLE VALVE POSITION, %)
Target Throttle Valve Position is ECM internal parameter which indicates the ECM requested throttle valve position.

IAC THROTTLE OPENING (IDLE AIR (SPEED) CONTROL THROTTLE VALVE OPENING, %)
This parameter indicates throttle valve opening of idle air control in %.
(100% indicates the maximum idle air flow.)

THROTTLE MOTOR VOLT (V)
This parameter indicates power supply voltage of throttle actuator (motor) control circuit (input voltage from throttle actuator control relay).

CLOSED THROTTLE POS (CLOSED THROTTLE POSITION, ON/OFF)
This parameter reads ON when throttle valve is fully closed, or OFF when it is not fully closed.

THROTTLE MOTOR RELAY (ON/OFF)
ON: Throttle actuator (motor) control activated by ECM.
OF: Throttle actuator (motor) control stopped by ECM.

VEHICLE SPEED (km/h, mph)
It is computed based on pulse signals from front wheel speed sensor (RH, LH) (for M/T model) or output shaft speed sensor (VSS) (for A/T model).

INJ PULSE WIDTH (FUEL INJECTION PULSE WIDTH, msec.)
This parameter indicates time of the injector drive (valve opening) pulse which is output from ECM (but injector drive time of NO.1 cylinder for multiport fuel injection).

Visual Inspection

S7RW0A1104010

Visually check the following parts and systems.

Inspection item	Reference section
• Engine oil – level, leakage	"Engine Oil and Filter Change in Section 0B"
• Engine coolant – level, leakage	"Coolant Level Check in Section 1F"
• Fuel – level, leakage	"Fuel Lines and Connections Inspection in Section 0B"
• Air cleaner element – dirt, clogging	"Air Cleaner Filter Inspection in Section 0B"
• Battery – fluid level, corrosion of terminal	"Battery Dismounting and Remounting in Section 1J"
• Water pump belt – tension damage	"Accessory Drive Belt Inspection in Section 0B"
• Throttle valve – operating sound	"Electric Throttle Body Assembly On-Vehicle Inspection in Section 1C"
• Vacuum hoses of air intake system – disconnection, looseness, deterioration, bend	"Vacuum Hose Inspection in Section 1B"
• Connectors of electric wire harness – disconnection, friction	
• Fuses – burning	
• Parts – installation, bolt – looseness	
• Parts – deformation	
• Other parts that can be checked visually	
Also check the following items at engine start, if possible	
• Malfunction indicator lamp – Operation	"Malfunction Indicator Lamp (MIL) Check"
• Charge warning lamp – Operation	"Generator Symptom Diagnosis in Section 1J"
• Engine oil pressure warning lamp – Operation	"Oil Pressure Switch Inspection in Section 9C"
• Engine coolant temp. meter – Operation	"Engine Coolant Temperature (ECT) Sensor Inspection in Section 1C"
• Fuel level meter – Operation	"Fuel Level Sensor Inspection in Section 9C"
• Tachometer – Operation	
• Abnormal air being inhaled from air intake system	
• Exhaust system – leakage of exhaust gas, noise	
• Other parts that can be checked visually	

Engine Basic Inspection

S7RW0A1104011

This check is very important for troubleshooting when ECM has detected no DTC and no abnormality has been found in "Visual Inspection".
Follow the flow carefully.

Step	Action	Yes	No
1	*Was "Engine and Emission Control System Check" performed?*	Go to Step 2.	Go to "Engine and Emission Control System Check".
2	**Check battery voltage** *Is it 11 V or more?*	Go to Step 3.	Charge or replace battery.
3	*Is vehicle equipped with keyless start control system?*	Go to Step 4.	Go to Step 5.

Step	Action	Yes	No
4	**Check keyless start control system malfunction** 1) Check keyless start control system referring to “Keyless Start System Operation Inspection in Section 10E”. *Is check result satisfactory?*	Go to Step 5.	Keyless start control system malfunction.
5	*Is engine cranked?*	Go to Step 6.	Go to “Cranking System Symptom Diagnosis in Section 1I”.
6	*Does engine start?*	Go to Step 7.	Go to Step 9.
7	**Check idle speed** 1) Check engine idle speed referring to “Idle Speed and IAC Throttle Valve Opening Inspection”. *Is check result as specified?*	Go to Step 8.	Go to “Engine Symptom Diagnosis”.
8	**Check ignition timing** 1) Check ignition timing referring to “Ignition Timing Inspection in Section 1H”. *Is check result as specified?*	Go to “Engine Symptom Diagnosis”.	Check ignition control related parts referring to “Ignition Timing Inspection in Section 1H”.
9	**Check immobilizer system malfunction** 1) Check immobilizer indicator lamp for flashing. *Is it flashing when ignition switch is turned to ON position?*	Go to “DTC Check in Section 10C”.	Go to Step 10.
10	**Check fuel supply** 1) Check to make sure that enough fuel is filled in fuel tank. 2) Turn ON ignition switch for 2 seconds and then OFF. 3) Repeat Step 2) a few times. *Is fuel pressure felt from fuel feed hose when ignition switch is turned ON?* 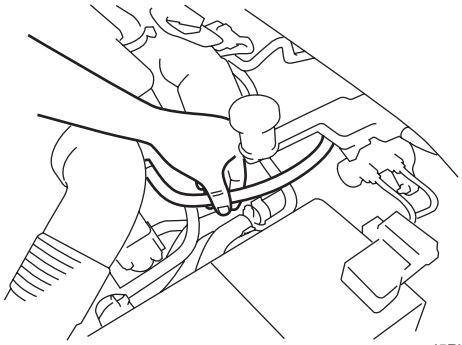 I5RW0A110014-01	Go to Step 12.	Go to Step 11.
11	**Check fuel pump for operation** *Was fuel pump operating sound heard from fuel filler for about 2 seconds after ignition switch ON and stop?*	Go to “Fuel Pressure Check”.	Go to “Fuel Pump and Its Circuit Check”.
12	**Check ignition spark** 1) Check ignition spark referring to “Ignition Spark Test in Section 1H”. *Is it in good condition?*	Go to Step 13.	Go to “Ignition System Symptom Diagnosis in Section 1H”.
13	**Check fuel injector circuit** 1) Check fuel injector circuit referring to “Fuel Injector Circuit Check”. *Is it in good condition?*	Go to “Engine Symptom Diagnosis”.	Go to “Fuel Injector Circuit Check”.

Engine Symptom Diagnosis

S7RW0A1104012

Perform troubleshooting referring to the followings when ECM has detected no DTC and no abnormality has been found in “Visual Inspection” and “Engine Basic Inspection”.

Condition	Possible cause	Correction / Reference Item
Hard starting (Engine cranks OK)	Faulty spark plug	*“Spark Plug Inspection in Section 1H”*
	Leaky high-tension cord	*“High-Tension Cord Inspection in Section 1H”*
	Loose connection or disconnection of high-tension cord(s) or lead wire(s)	*“High-Tension Cord Removal and Installation in Section 1H”*
	Faulty ignition coil	*“Ignition Coil Assembly (Including Ignitor) Inspection in Section 1H”*
	Dirty or clogged fuel hose or pipe	*“Fuel Pressure Check”*
	Malfunctioning fuel pump	*“Fuel Pressure Check”*
	Air drawn in through intake manifold gasket or throttle body gasket	
	Faulty electric throttle body assembly	*“Electric Throttle Body Assembly On-Vehicle Inspection in Section 1C”*
	Faulty APP sensor assembly	*“Accelerator Pedal Position (APP) Sensor Assembly Inspection in Section 1C”*
	Faulty ECT sensor or MAF sensor	*“Engine Coolant Temperature (ECT) Sensor Inspection in Section 1C” or “Intake Air Temperature (IAT) Sensor Inspection in Section 1C”*
	Faulty ECM	
	Low compression	*“Compression Check in Section 1D”*
	Poor spark plug tightening or faulty gasket	*“Spark Plug Removal and Installation in Section 1H”*
	Compression leak from valve seat	*“Valves and Valve Guides Inspection in Section 1D”*
	Sticky valve stem	*“Valves and Valve Guides Inspection in Section 1D”*
	Weak or damaged valve springs	*“Valve Spring Inspection in Section 1D”*
	Compression leak at cylinder head gasket	*“Cylinder Head Inspection in Section 1D”*
	Sticking or damaged piston ring	*“Cylinders, Pistons and Piston Rings Inspection in Section 1D”*
	Worn piston, ring or cylinder	*“Cylinders, Pistons and Piston Rings Inspection in Section 1D”*
	Malfunctioning PCV valve	*“PCV Valve Inspection in Section 1B”*
	Camshaft position control (VVT) system out of order (for engine with VVT system)	*“Oil Control Valve Inspection (For Engine with VVT) in Section 1D”*
	Faulty EGR system	*“EGR System Inspection (If Equipped) in Section 1B”*
Low oil pressure	Improper oil viscosity	*“Engine Oil and Filter Change in Section 0B”*
	Malfunctioning oil pressure switch	*“Oil Pressure Switch Inspection in Section 9C”*
	Clogged oil strainer	*“Oil Pan and Oil Pump Strainer Cleaning in Section 1E”*
	Functional deterioration of oil pump	*“Oil Pump Inspection in Section 1E”*
	Worn oil pump relief valve	*“Oil Pump Inspection in Section 1E”*
	Excessive clearance in various sliding parts	

Condition	Possible cause	Correction / Reference Item
Engine noise – Valve noise ***NOTE*** ***Before checking mechanical noise, make sure that:*** • ***Specified spark plug is used.*** • ***Specified fuel is used.***	Improper valve lash	*"Camshaft, Tappet and Shim Inspection in Section 1D"*
	Worn valve stem and guide	*"Valves and Valve Guides Inspection in Section 1D"*
	Weak or broken valve spring	*"Valve Spring Inspection in Section 1D"*
	Warped or bent valve	*"Valves and Valve Guides Inspection in Section 1D"*
Engine noise – Piston, ring and cylinder noise ***NOTE*** ***Before checking mechanical noise, make sure that:*** • ***Specified spark plug is used.*** • ***Specified fuel is used.***	Worn piston, ring and cylinder bore	*"Cylinders, Pistons and Piston Rings Inspection in Section 1D"*
Engine noise – Connecting rod noise ***NOTE*** ***Before checking mechanical noise, make sure that:*** • ***Specified spark plug is used.*** • ***Specified fuel is used.***	Worn piston, ring and cylinder bore	*"Cylinders, Pistons and Piston Rings Inspection in Section 1D"*
	Worn rod bearing	*"Crank Pin and Connecting Rod Bearings Inspection in Section 1D"*
	Worn crank pin	*"Crank Pin and Connecting Rod Bearings Inspection in Section 1D"*
	Loose connecting rod nuts	*"Pistons, Piston Rings, Connecting Rods and Cylinders Removal and Installation in Section 1D"*
	Low oil pressure	*Condition "Low oil pressure"*
Engine noise – Crankshaft noise ***NOTE*** ***Before checking mechanical noise, make sure that:*** • ***Specified spark plug is used.*** • ***Specified fuel is used.***	Low oil pressure	*Condition "Low oil pressure"*
	Worn bearing	*"Main Bearings Inspection in Section 1D"*
	Worn crankshaft journal	*"Crankshaft Inspection in Section 1D"*
	Loose bearing cap bolts	*"Main Bearings, Crankshaft and Cylinder Block Removal and Installation in Section 1D"*
	Excessive crankshaft thrust play	*"Crankshaft Inspection in Section 1D"*

Condition	Possible cause	Correction / Reference Item
Engine overheating	Inoperative thermostat	*"Thermostat Inspection in Section 1F"*
	Poor water pump performance	*"Water Pump Inspection in Section 1F"*
	Clogged or leaky radiator	*"Radiator On-Vehicle Inspection and Cleaning in Section 1F"*
	Improper engine oil grade	*"Engine Oil and Filter Change in Section 0B"*
	Clogged oil filter or oil strainer	*"Oil Pressure Check in Section 1E"*
	Poor oil pump performance	*"Oil Pressure Check in Section 1E"*
	Faulty radiator cooling fan control system	*"Radiator Cooling Fan Control System Check"*
	Dragging brakes	*Condition "Dragging brakes" in "Brakes Symptom Diagnosis in Section 4A"*
	Slipping clutch (for M/T model)	*Condition "Slipping clutch" in "Clutch System Symptom Diagnosis in Section 5C" for M/T model*
	Blown cylinder head gasket	*"Cylinder Head Inspection in Section 1D"*
	Air mixed in cooling system	
Poor gasoline mileage	Leaks or loose connection of high-tension cord	*"High-Tension Cord Removal and Installation in Section 1H"*
	Faulty spark plug (improper gap, heavy deposits and burned electrodes, etc.)	*"Spark Plug Inspection in Section 1H"*
	Malfunctioning EGR valve	*"EGR Valve Inspection (If Equipped) in Section 1B"*
	High idle speed	*Condition "Improper engine idling or engine fails to idle"*
	Poor performance of ECT sensor, MAF sensor	*"Engine Coolant Temperature (ECT) Sensor Inspection in Section 1C", or "Intake Air Temperature (IAT) Sensor Inspection in Section 1C"*
	Faulty electric throttle body assembly	*"Electric Throttle Body Assembly On-Vehicle Inspection in Section 1C"*
	Faulty APP sensor assembly	*"Accelerator Pedal Position (APP) Sensor Assembly Inspection in Section 1C"*
	Faulty fuel injector(s)	*"Fuel Injector Circuit Check"*
	Faulty ECM	
	Low compression	*"Compression Check in Section 1D"*
	Poor valve seating	*"Valves and Valve Guides Inspection in Section 1D"*
	Dragging brakes	*Condition "Dragging brakes" in "Brakes Symptom Diagnosis in Section 4A"*
	Slipping clutch (for M/T model)	*Condition "Slipping clutch" in "Clutch System Symptom Diagnosis in Section 5C" for M/T model*
	Thermostat out of order	*"Thermostat Inspection in Section 1F"*
	Improper tire pressure	*"Tires Description in Section 2D"*
	Camshaft position control (VVT) system out of order (for engine with VVT system)	*"Oil Control Valve Inspection (For Engine with VVT) in Section 1D"*
Excessive engine oil consumption – Oil leakage	Blown cylinder head gasket	*"Cylinder Head Inspection in Section 1D"*
	Leaky camshaft oil seals	*"Camshaft, Tappet and Shim Inspection in Section 1D"*

Condition	Possible cause	Correction / Reference Item
Excessive engine oil consumption – Oil entering combustion chamber	Sticky piston ring	*"Cylinders, Pistons and Piston Rings Inspection in Section 1D"*
	Worn piston and cylinder	*"Cylinders, Pistons and Piston Rings Inspection in Section 1D"*
	Worn piston ring groove and ring	*"Cylinders, Pistons and Piston Rings Inspection in Section 1D"*
	Improper location of piston ring gap	*"Pistons, Piston Rings, Connecting Rods and Cylinders Disassembly and Assembly in Section 1D"*
	Worn or damaged valve stem seal	*"Valves and Valve Guides Inspection in Section 1D"*
	Worn valve stem	*"Valves and Valve Guides Inspection in Section 1D"*
Engine hesitates – Momentary lack of response as accelerator is depressed. Can occur at all vehicle speeds. Usually most severe when first trying to make vehicle move, as from a stop sign.	Spark plug faulty or plug gap out of adjustment	*"Spark Plug Inspection in Section 1H"*
	Leaky high-tension cord	*"High-Tension Cord Inspection in Section 1H"*
	Fuel pressure out of specification	*"Fuel Pressure Check"*
	Malfunctioning EGR valve	*"EGR Valve Inspection (If Equipped) in Section 1B"*
	Poor performance of ECT sensor or MAF sensor	*, "Engine Coolant Temperature (ECT) Sensor Inspection in Section 1C" or "Intake Air Temperature (IAT) Sensor Inspection in Section 1C"*
	Faulty electric throttle body assembly	*"Electric Throttle Body Assembly On-Vehicle Inspection in Section 1C"*
	Faulty APP sensor assembly	*"Accelerator Pedal Position (APP) Sensor Assembly Inspection in Section 1C"*
	Faulty fuel injector	*"Fuel Injector Circuit Check"*
	Faulty ECM	
	Engine overheating	*Condition "Engine overheating"*
	Low compression	*"Compression Check in Section 1D"*
	Camshaft position control (VVT) system out of order (for engine with VVT system)	*"Oil Control Valve Inspection (For Engine with VVT) in Section 1D"*
Surge – Engine power variation under steady throttle or cruise. Feels like vehicle speeds up and down with no change in accelerator pedal.	Leaky or loosely connected high-tension cord	*"High-Tension Cord Removal and Installation in Section 1H"*
	Faulty spark plug (excess carbon deposits, improper gap, burned electrodes, etc.)	*"Spark Plug Inspection in Section 1H"*
	Variable fuel pressure	*"Fuel Pressure Check"*
	Kinky or damaged fuel hose and lines	
	Faulty fuel pump (clogged fuel filter)	
	Malfunctioning EGR valve	*"EGR Valve Inspection (If Equipped) in Section 1B"*
	Poor performance of MAF sensor	*"Intake Air Temperature (IAT) Sensor Inspection in Section 1C"*
	Faulty fuel injector	*"Fuel Injector Circuit Check"*
	Faulty ECM	
	Faulty electric throttle body assembly	*"Electric Throttle Body Assembly On-Vehicle Inspection in Section 1C"*
	Faulty APP sensor assembly	*"Accelerator Pedal Position (APP) Sensor Assembly Inspection in Section 1C"*

Condition	Possible cause	Correction / Reference Item
Excessive detonation – Engine makes continuously sharp metallic knocks that change with throttle opening. Sounds like pop corn popping.	Faulty spark plug	*"Spark Plug Inspection in Section 1H"*
	Loose connection of high-tension cord	*"High-Tension Cord Removal and Installation in Section 1H"*
	Engine overheating	*Condition "Engine overheating"*
	Clogged fuel filter (faulty fuel pump) or fuel lines	*"Fuel Pressure Check" or "Fuel Pump and Its Circuit Check"*
	Air drawn in through intake manifold or throttle body gasket	
	Malfunctioning EGR valve	*"EGR Valve Inspection (If Equipped) in Section 1B"*
	Poor performance of knock sensor, ECT sensor or MAF sensor	*"DTC P0327 / P0328: Knock Sensor Circuit Low / High", "Engine Coolant Temperature (ECT) Sensor Inspection in Section 1C" or "Intake Air Temperature (IAT) Sensor Inspection in Section 1C"*
	Faulty fuel injector(s)	*"Fuel Injector Circuit Check"*
	Faulty ECM	
	Excessive combustion chamber deposits	*"Cylinders, Pistons and Piston Rings Inspection in Section 1D" and/or "Piston Pins and Connecting Rods Inspection in Section 1D"*
	Camshaft position control (VVT) system out of order (for engine with VVT system)	*"Oil Control Valve Inspection (For Engine with VVT) in Section 1D"*
Engine has no power	Faulty spark plug	*"Spark Plug Inspection in Section 1H"*
	Faulty ignition coil with ignitor	*"Ignition Coil Assembly (Including Ignitor) Inspection in Section 1H"*
	Leaks, loose connection or disconnection of high-tension cord	*"High-Tension Cord Removal and Installation in Section 1H"*
	Faulty knock sensor	*"DTC P0327 / P0328: Knock Sensor Circuit Low / High"*
	Clogged fuel hose or pipe	*"Fuel Pressure Check"*
	Malfunctioning fuel pump	*"Fuel Pump and Its Circuit Check"*
	Air drawn in through intake manifold gasket or throttle body gasket	
	Engine overheating	*Condition "Engine overheating"*
	Malfunctioning EGR valve	*"EGR Valve Inspection (If Equipped) in Section 1B"*
	Poor performance of ECT sensor or MAF sensor	*"Engine Coolant Temperature (ECT) Sensor Inspection in Section 1C" or "Intake Air Temperature (IAT) Sensor Inspection in Section 1C"*
	Faulty electric throttle body assembly	*"Electric Throttle Body Assembly On-Vehicle Inspection in Section 1C"*
	Faulty APP sensor assembly	*"Accelerator Pedal Position (APP) Sensor Assembly Inspection in Section 1C"*
	Faulty fuel injector(s)	*"Fuel Injector Circuit Check"*
	Faulty ECM	
	Dragging brakes	*Condition "Dragging brakes" in "Brakes Symptom Diagnosis in Section 4A"*
	Slipping clutch (for M/T model)	*Condition "Slipping clutch" in "Clutch System Symptom Diagnosis in Section 5C" (for M/T model)*
	Low compression	*"Compression Check in Section 1D"*
	Camshaft position control (VVT) system out of order (for engine with VVT system)	*"Oil Control Valve Inspection (For Engine with VVT) in Section 1D"*

Condition	Possible cause	Correction / Reference Item
Improper engine idling or engine fails to idle	Faulty spark plug	*"Spark Plug Inspection in Section 1H"*
	Leaky or disconnected high-tension cord	*"High-Tension Cord Removal and Installation in Section 1H"*
	Faulty ignition coil with ignitor	*"Ignition Coil Assembly (Including Ignitor) Inspection in Section 1H"*
	Fuel pressure out of specification	*"Fuel Pressure Check"*
	Leaky manifold, throttle body, or cylinder head gasket	
	Malfunctioning EGR valve	*"EGR Valve Inspection (If Equipped) in Section 1B"*
	Faulty evaporative emission control system	*"EVAP Canister Purge Inspection in Section 1B"*
	Faulty EGR system	*"EGR System Inspection (If Equipped) in Section 1B"*
	Faulty fuel injector(s)	*"Fuel Injector Circuit Check"*
	Poor performance of ECT sensor or MAF sensor	*"Engine Coolant Temperature (ECT) Sensor Inspection in Section 1C", or "Intake Air Temperature (IAT) Sensor Inspection in Section 1C"*
	Faulty electric throttle body assembly	*"Electric Throttle Body Assembly On-Vehicle Inspection in Section 1C"*
	Faulty APP sensor assembly	*"Accelerator Pedal Position (APP) Sensor Assembly Inspection in Section 1C"*
	Faulty ECM	
	Loose connection or disconnection of vacuum hoses	
	Malfunctioning PCV valve	*"PCV Valve Inspection in Section 1B"*
	Engine overheating	*Condition "Engine overheating"*
	Low compression	*"Compression Check in Section 1D"*
	Camshaft position control (VVT) system out of order (for engine with VVT system)	*"Oil Control Valve Inspection (For Engine with VVT) in Section 1D"*

Condition	Possible cause	Correction / Reference Item
Excessive hydrocarbon (HC) emission or carbon monoxide (CO)	Faulty spark plug	*"Spark Plug Inspection in Section 1H"*
	Leaky or disconnected high-tension cord	*"High-Tension Cord Removal and Installation in Section 1H"*
	Faulty ignition coil with ignitor	*"Ignition Coil Assembly (Including Ignitor) Inspection in Section 1H"*
	Low compression	*"Compression Check in Section 1D"*
	Lead contamination of three way catalytic converter	*Check for absence of filler neck restrictor.*
	Faulty evaporative emission control system	*"EVAP Canister Purge Inspection in Section 1B"*
	Fuel pressure out of specification	*"Fuel Pressure Check"*
	Closed loop system (A/F feedback compensation) fails (Poor performance of ECT sensor or MAF sensor)	*"Engine Coolant Temperature (ECT) Sensor Inspection in Section 1C" or "Intake Air Temperature (IAT) Sensor Inspection in Section 1C"*
	Faulty electric throttle body assembly	*"Electric Throttle Body Assembly On-Vehicle Inspection in Section 1C"*
	Faulty APP sensor assembly	*"Accelerator Pedal Position (APP) Sensor Assembly Inspection in Section 1C"*
	Faulty injector(s)	*"Fuel Injector Circuit Check"*
	Faulty ECM	
	Engine not at normal operating temperature	
	Clogged air cleaner	*"Air Cleaner Filter Inspection and Cleaning in Section 1D"*
	Vacuum leaks	*"Engine Vacuum Check in Section 1D"*
	Camshaft position control (VVT) system out of order (for engine with VVT system)	*"Oil Control Valve Inspection (For Engine with VVT) in Section 1D"*
Excessive nitrogen oxides (NOx) emission	Improper ignition timing	*"Ignition Timing Inspection in Section 1H"*
	Lead contamination of catalytic converter	*Check for absence of filler neck restrictor.*
	Faulty EGR system	*"EGR System Inspection (If Equipped) in Section 1B"*
	Fuel pressure out of specification	*"Fuel Pressure Check"*
	Closed loop system (A/F feedback compensation) fails (Poor performance of ECT sensor or MAF sensor)	*"Engine Coolant Temperature (ECT) Sensor Inspection in Section 1C" or "Intake Air Temperature (IAT) Sensor Inspection in Section 1C"*
	Faulty electric throttle body assembly	*"Electric Throttle Body Assembly On-Vehicle Inspection in Section 1C"*
	Faulty APP sensor assembly	*"Accelerator Pedal Position (APP) Sensor Assembly Inspection in Section 1C"*
	Faulty injector(s)	*"Fuel Injector Circuit Check"*
	Faulty ECM	
	Camshaft position control (VVT) system out of order (for engine with VVT system)	*"Oil Control Valve Inspection (For Engine with VVT) in Section 1D"*

Malfunction Indicator Lamp Does Not Come ON with Ignition Switch ON and Engine Stop (but Engine Can Be Started)

S7RW0A1104013

Wiring Diagram

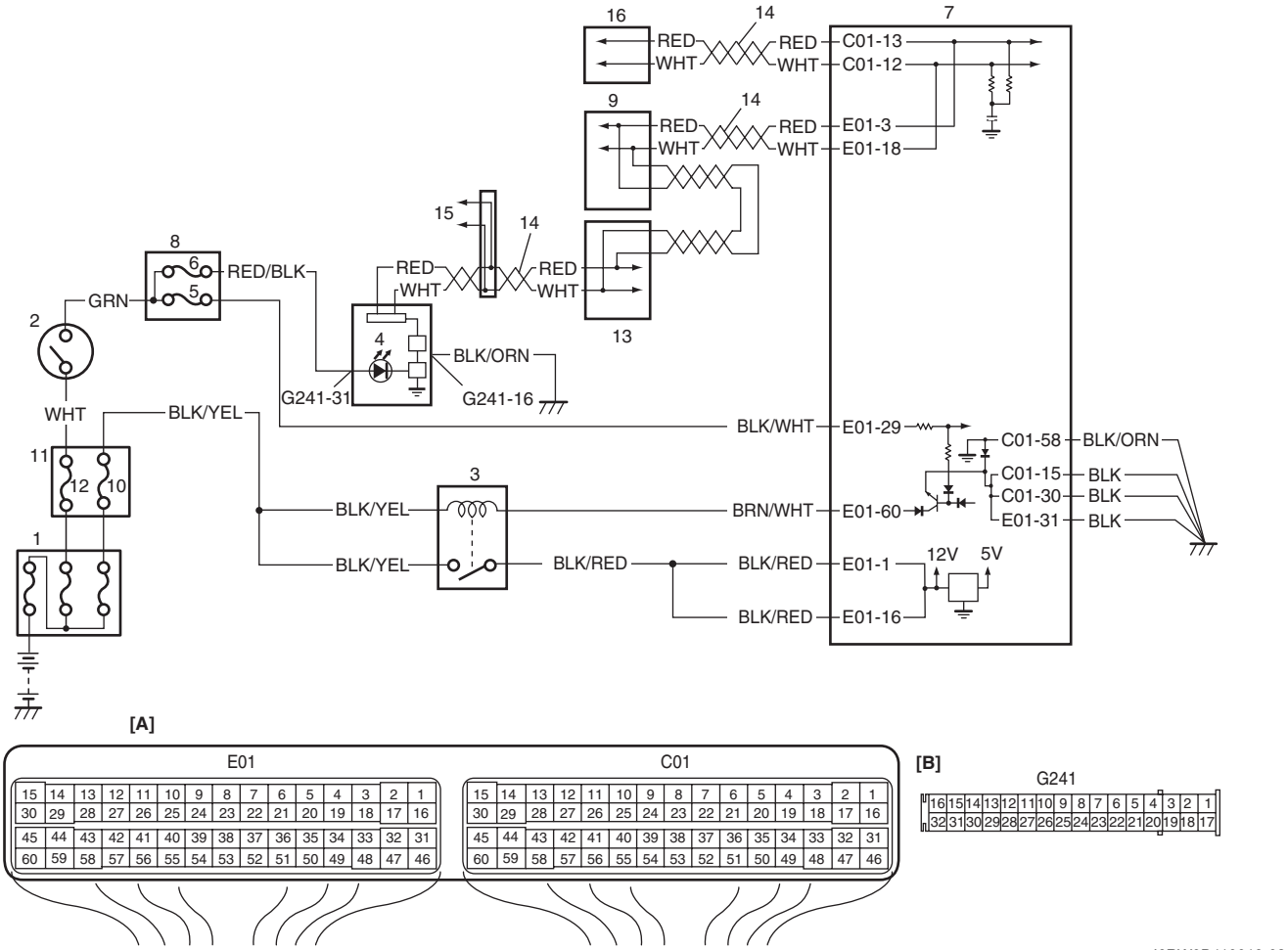

I6RW0D110018-02

[A]: ECM connector (viewed from harness side)	5. “IG COIL” fuse	11. Individual circuit fuse box No.1
[B]: Combination meter connector (viewed from harness side)	6. “METER” fuse	12. “IGN” fuse
1. Main fuse box	7. ECM	13. BCM
2. Ignition switch	8. Junction block assembly	14. CAN communication line
3. Main relay	9. ABS / ESP® control module	15. To other control module (if equipped)
4. Malfunction indicator lamp in combination meter	10. “FI” fuse	16. TCM (for A/T model)

Circuit Description

When the ignition switch is turned ON, ECM causes the main relay to turn ON (close the contact point). Then, ECM being supplied with the main power, transmits indication ON signal of malfunction indicator lamp (MIL) to combination meter in order to turn MIL ON. And then, combination meter turns MIL ON. When the engine starts to run and no malfunction is detected in the system, ECM transmits MIL indication OFF signal to combination meter in order to turn MIL OFF. And then, combination meter turns MIL OFF, but if a malfunction was or is detected, MIL remains ON even when the engine is running.

Troubleshooting

NOTE

- **Before performed trouble shooting, be sure to read the “Precautions of ECM Circuit Inspection”.**
- **When measuring circuit voltage, resistance and/or pulse signal at ECM connector, connect the special tool to ECM and/or the ECM connectors referring to “Inspection of ECM and Its Circuits”.**

Step	Action	Yes	No
1	**MIL power supply check** 1) Turn ignition switch to ON position. *Do other warning lights come ON?*	Go to Step 2.	Go to Step 3.
2	**DTC check** 1) Connect scan tool to DLC with ignition switch turned OFF. 2) Turn ON ignition switch and check DTC in ECM. *Is there DTC(s) U0073 and/or U0121?*	Go to applicable DTC diag. flow.	Go to Step 3.
3	**Combination meter power supply and ground circuit check** 1) Turn ignition switch OFF position. 2) Disconnect connector from combination meter. 3) Check for proper connection to power supply and ground terminals of combination meter connector. 4) If connections are OK, check that combination meter circuit is as follows. • Circuit voltage between combination meter power supply terminal and vehicle body ground is 10 –14 V. • Wiring harness resistance of combination meter ground terminal and vehicle body ground is less than 3 Ω. *Are they in good condition?*	Go to Step 4.	Repair or replace.
4	**CAN communication line circuit check** 1) Check CAN communication line circuit between control modules for open, short, high resistance and connections referring to Step 5 to 10 under “Troubleshooting for Communication Error with Scan Tool Using CAN”. *Is circuit in good condition?*	Substitute a known-good combination meter and recheck. If MIL still remains OFF, substitute a known-good ECM and recheck.	Repair or replace.

Malfunction Indicator Lamp Remains ON after Engine Starts

S7RW0A1104014

Wiring Diagram

Refer to “Malfunction Indicator Lamp Does Not Come ON with Ignition Switch ON and Engine Stop (but Engine Can Be Started)”.

Circuit Description

When the ignition switch is turned ON, ECM causes the main relay to turn ON (close the contact point). Then, ECM being supplied with the main power, transmits indication ON signal of malfunction indicator lamp (MIL) to combination meter in order to turn MIL ON. And then, combination meter turns MIL ON. When the engine starts to run and no malfunction is detected in the system, ECM transmits MIL indication OFF signal to combination meter in order to turn MIL OFF. And then, combination meter turns MIL OFF, but if a malfunction was or is detected, MIL remains ON even when the engine is running.

Troubleshooting

NOTE

- **Before performed trouble shooting, be sure to read the “Precautions of ECM Circuit Inspection”.**
- **When measuring circuit voltage, resistance and/or pulse signal at ECM connector, connect the special tool to ECM and/or the ECM connectors referring to “Inspection of ECM and Its Circuits”.**

Step	Action	Yes	No
1	**DTC check** 1) Start engine and recheck DTC of ECM and TCM (for A/T model) while engine running. *Is there any DTC(s)?*	Go to Step 2 of “Engine and Emission Control System Check”, Step 2 of “A/T System Check in Section 5A”.	Go to Step 2.
2	**CAN communication line circuit check** 1) Check CAN communication line circuit between control modules for open, short, high resistance and connections referring to Step 5 to 10 under “Troubleshooting for Communication Error with Scan Tool Using CAN”. *Is circuit in good condition?*	Substitute a known-good combination meter and recheck. If MIL still remains ON, substitute a known-good ECM and recheck.	Repair or replace CAN communication circuit.

DTC P0010: Camshaft Position Actuator Circuit (for engine with VVT system)

S7RW0A1104015

System and Wiring Diagram

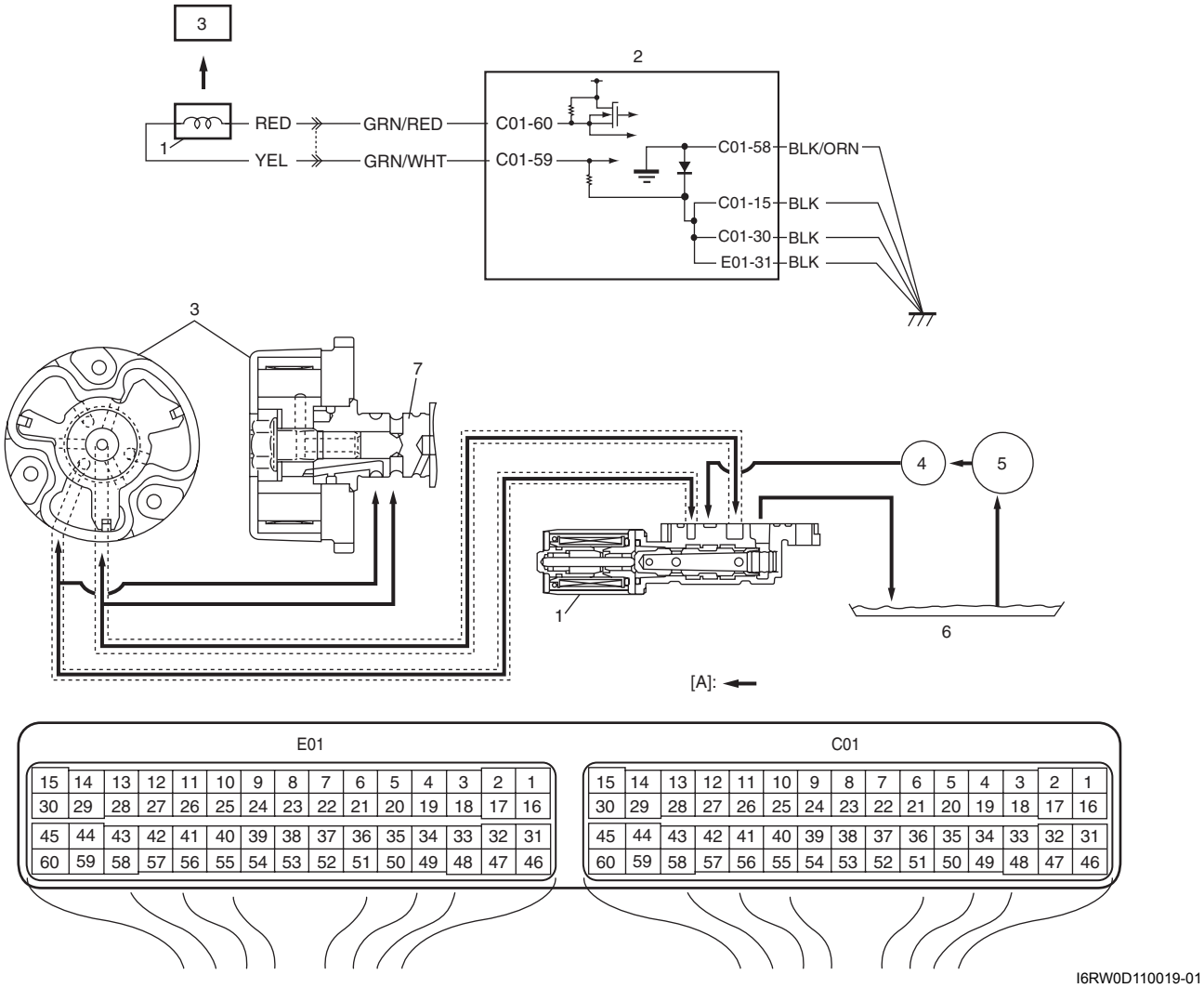

I6RW0D110019-01

[A]: Oil flow	2. ECM	4. Oil filter	6. Oil pan
1. Oil control valve	3. Camshaft timing sprocket	5. Oil pump	7. Intake camshaft

Circuit Description

Actual valve timing fails to become close to target advance level of each function although advance control function or retarded advance control function is at work.

DTC Detecting Condition and Trouble Area

DTC detecting condition	Trouble area
Monitor signal of oil control valve is different from command signal. (Circuit open or short) (1 driving cycle detection logic)	• Oil control valve • Oil control valve circuit • ECM

DTC Confirmation Procedure

1) Clear DTC. Refer to “DTC Clearance”.
2) Start engine and keep it at idle for 10 seconds.
3) Check DTC. Refer to “DTC Check”.

DTC Troubleshooting

NOTE

Before this troubleshooting is performed, read the precautions for DTC troubleshooting referring to "Precautions for DTC Troubleshooting".

Step	Action	Yes	No
1	*Was "Engine and Emission Control System Check" performed?*	Go to Step 2.	Go to "Engine and Emission Control System Check".
2	**Oil control valve electrical circuit check** 1) Disconnect connectors from ECM with ignition switch turned OFF. 2) Check for proper connection at "C01-60" and "C01-59" terminals of ECM connector. 3) If OK, measure resistance between "C01-60" and "C01-59" terminals of ECM connector. *Is resistance below 10 Ω?*	Go to Step 3.	Go to Step 8.
3	**Oil control valve electrical circuit check** *Was resistance more than 6.5 Ω in Step 2?*	Go to Step 4.	Go to Step 7.
4	**Oil control valve electrical circuit for power short check** 1) Turn ON ignition switch. 2) Measure voltage between "C01-60" terminal of ECM connector and engine ground. *Is voltage below 1 V?*	Go to Step 5.	"RED", "GRN/RED", "YEL" or "GRN/WHT" wire is shorted to power supply circuit.
5	**Oil control valve electrical circuit for ground short check** 1) Disconnect connector from oil control valve with ignition switch turned OFF. 2) Measure resistance between "C01-60" terminal of ECM connector and engine ground. *Is resistance infinity?*	Go to Step 6.	"GRN/RED" wire is shorted to ground circuit.
6	**Oil control valve electrical circuit for ground short check** 1) Measure resistance between "C01-59" terminal of ECM connector and engine ground. *Is resistance infinity?*	Go to Step 7.	"GRN/WHT" wire is shorted to ground circuit.
7	**Oil control valve electrical circuit for short check** 1) Disconnect connector from oil control valve with ignition switch turned OFF. 2) Measure resistance between "C01-60" and "C01-59" terminals of ECM connector. *Is resistance infinity?*	Go to Step 8.	"GRN/RED" wire is shorted to "GRN/WHT" wire.
8	**Oil control valve electrical circuit check** 1) Disconnect connector from oil control valve with ignition switch turned OFF. 2) Measure resistance between "C01-60" terminal of ECM connector and "GRN/RED" wire terminal of oil control valve connector and between "C01-59" terminal of ECM connector and "GRN/WHT" wire terminal of oil control valve connector. *Is resistance below 1 Ω?*	Go to Step 9.	"GRN/RED" wire or "GRN/WHT" wire circuit is open or high resistance.

Step	Action	Yes	No
9	**Oil control valve check** Check oil control valve referring to “Oil Control Valve Inspection (For Engine with VVT) in Section 1D”. *Is resistance within specified value?*	Substitute a known-good ECM and recheck.	Faulty oil control valve.

DTC P0011 / P0012: Camshaft Position - Timing Over-Advanced or System Performance / Retarded (for engine with VVT system)

S7RW0A1104016

System Description

Actual value of advanced valve timing does not reach target value.
Valve timing is advanced although ECM command is most retarding.

DTC Detecting Condition and Trouble Area

DTC detecting condition	Trouble area
Actual value of advanced valve timing does not reach target value, or valve timing is advanced although ECM command is most retarding. (2 driving cycle detection logic)	• Oil control valve • Oil galleries of timing sprocket • Intake camshaft timing sprocket (Camshaft position control (VVT) actuator) • Oil control valve circuit • ECM

DTC Confirmation Procedure

⚠ WARNING

- **When performing a road test, select a place where there is no traffic or possibility of a traffic accident and be very careful during testing to avoid occurrence of an accident.**
- **Road test should be carried out by 2 persons, a driver and tester, on a level road.**

NOTE

Check to make sure that the following conditions are satisfied when using this “DTC Confirmation Procedure”.

- **Altitude (barometric pressure): 2500 m, 8200 ft or less (560 mmHg, 74.4 kPa or more)**

1) Clear DTC. Refer to “DTC Clearance”.
2) Start engine and drive vehicle under usual driving condition for 5 minutes or longer until engine is warmed up to normal operating temperature.
3) Stop vehicle.
4) Run engine at idle speed for 1 minute.
5) Start vehicle and increase vehicle speed up to 120 km/h (70 mile/h).
6) Keep vehicle speed at 120 km/h (70 mile/h) for 1 minute or longer at 5th gear position or D range.
7) Decrease vehicle speed gradually.
8) Stop vehicle and turn OFF ignition switch.
9) Repeat Step 4) to 7) one time.
10) Stop vehicle.
11) Check DTC. Refer to “DTC Check”.

DTC Troubleshooting

NOTE

Before this troubleshooting is performed, read the precautions for DTC troubleshooting referring to "Precautions for DTC Troubleshooting".

Step	Action	Yes	No
1	*Was "Engine and Emission Control System Check" performed?*	Go to Step 2.	Go to "Engine and Emission Control System Check".
2	*Do you have SUZUKI scan tool?*	Go to Step 3.	Go to Step 5.
3	**Camshaft position control check** 1) With ignition switch turned OFF, connect SUZUKI scan tool. 2) Start engine and warm up to normal operating temperature. 3) Select menu to "Data List". 4) Check that "VVT GAP" displayed on SUZUKI scan tool is 0 – 3°. *Is it OK?*	Go to Step 4.	Check valve timing referring to "Timing Chain and Chain Tensioner Removal and Installation in Section 1D". If OK, go to Step 5.
4	**Camshaft position control check** 1) Drive vehicle under following conditions. • Vehicle speed at 80 km/h (50 mile/h). • Gear position at 5th or D range. 2) Check that "VVT GAP" displayed on SUZUKI scan tool is 0 – 5°. *Is it OK?*	Substitute a known-good ECM and recheck.	Go to Step 5.
5	**Oil control circuit visual inspection** 1) Remove cylinder head cover referring to "Cylinder Head Cover Removal and Installation in Section 1D". 2) Check oil pressure leakage from oil control circuit. *Is it in good condition?*	Go to Step 6.	Repair or replace.
6	**Oil control valve and oil gallery pipe check** 1) Remove oil control valve referring to "Oil Control Valve Removal and Installation (For Engine with VVT) in Section 1D". 2) Remove oil gallery pipe referring to "Timing Chain Cover Removal and Installation in Section 1D". 3) Check oil gallery pipe and oil control valve for clog or sludge. *Are they in good condition?*	Go to Step 7.	Clean oil control valve and oil gallery pipe. Replace oil control valve if a problem is not solved after cleaning oil control valve and oil gallery pipe.
7	**Oil control valve electrical circuit check** 1) Check that oil control valve circuit is in good condition referring to "DTC P0010: Camshaft Position Actuator Circuit (for engine with VVT system)". *Is circuit in good condition?*	Repair circuit.	Go to Step 8.
8	**Oil control valve check** 1) Check oil control valve referring to "Oil Control Valve Inspection (For Engine with VVT) in Section 1D". *Is it in good condition?*	Replace camshaft timing sprocket.	Replace oil control valve.

DTC P0031 / P0032: HO2S Heater Control Circuit Low / High (Sensor-1)

S7RW0A1104017

Wiring Diagram

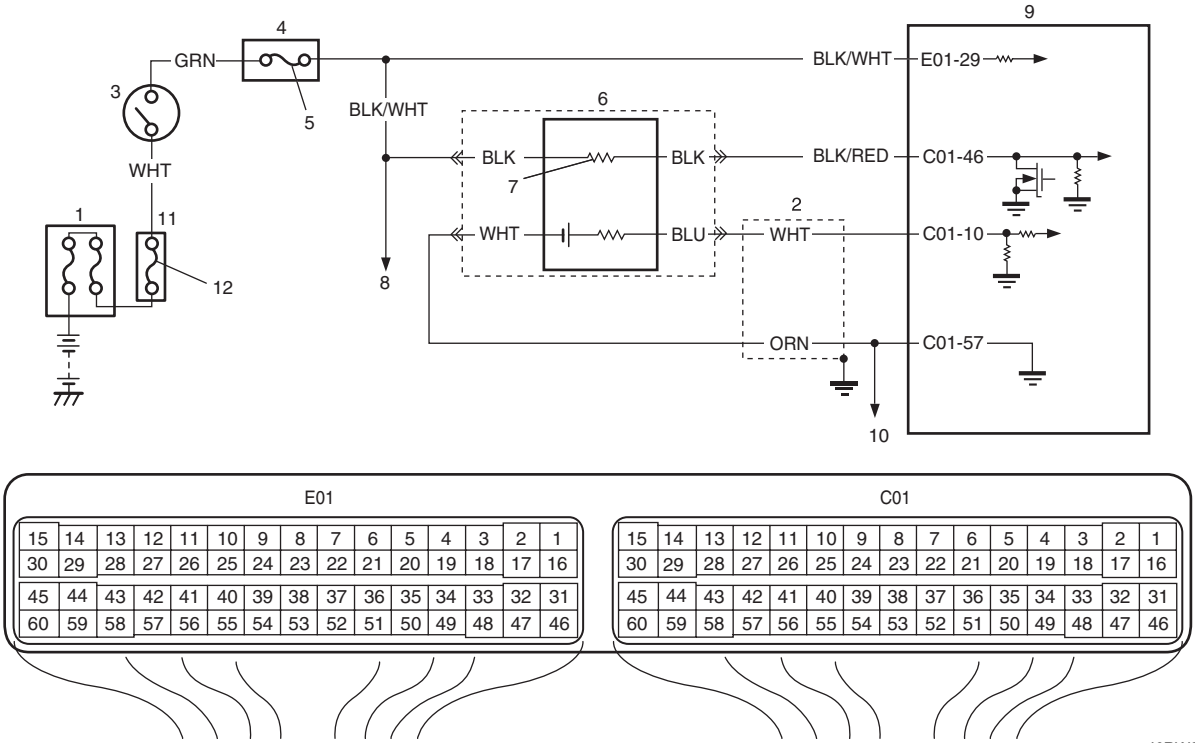

I6RW0D110020-01

1. Main fuse box	4. Junction block assembly	7. Heater	10. To HO2S-2
2. Shield wire	5. "IG COIL" fuse	8. To HO2S-2 heater	11. Individual circuit fuse box No.1
3. Ignition switch	6. HO2S-1	9. ECM	12. "IGN" fuse

DTC Detecting Condition and Trouble Area

DTC detecting condition	Trouble area
Voltage of HO2S-1 heater is more than specified value or lower than specified value for 5 seconds even through its control duty ratio is within 25 – 75%. (2 driving cycle detection logic)	• HO2S-1 heater circuit • HO2S-1 heater • ECM

DTC Confirmation Procedure

1) With ignition switch turned OFF, connect scan tool.
2) Turn ON ignition switch and clear DTC using scan tool.
3) Start engine and warm up to normal operating temperature.
4) Run engine at idle speed for 1 min. or more.
5) Check DTC and pending DTC.

DTC Troubleshooting

NOTE

Before this troubleshooting is performed, read the precautions for DTC troubleshooting referring to "Precautions for DTC Troubleshooting".

Step	Action	Yes	No
1	*Was "Engine and Emission Control System Check" performed?*	Go to Step 2.	Go to "Engine and Emission Control System Check".

Step	Action	Yes	No
2	**HO2S-1 heater power circuit check** 1) Disconnect connector from HO2S-1 with ignition switch turned OFF. 2) Check for proper connection to HO2S-1 at “BLK/WHT” and “BLK/RED” wire terminals. 3) If wire and connection are OK, measure voltage between “BLK/WHT” wire terminal and engine ground with ignition switch turned ON. *Is voltage over 10 V?*	Go to Step 3.	“BLK/WHT” wire is open circuit or shorted to ground circuit.
3	**HO2S-1 heater power circuit check** 1) Disconnect connectors from ECM with ignition switch turned OFF. 2) Measure resistance between “BLK/WHT” wire terminal of HO2S-1 connector and “E01-29” terminal of ECM connector. *Is resistance below 5 Ω?*	Go to Step 4.	“BLK/WHT” wire is high resistance circuit.
4	**HO2S-1 heater drive circuit check** 1) Measure resistance between “C01-46” terminal of ECM connector and vehicle body ground. *Is resistance infinity?*	Go to Step 5.	“BLK/RED” wire is shorted to ground circuit.
5	**HO2S-1 heater drive circuit check** 1) Turn ON ignition switch. 2) Measure voltage between “C01-46” terminal of ECM connector and vehicle body ground. *Is voltage 0 V?*	Go to Step 6.	“BLK/RED” wire is shorted to power circuit.
6	**HO2S-1 heater drive circuit check** 1) Connect connector to HO2S-1 with ignition switch turned OFF. 2) Turn ON ignition switch. 3) Measure voltage between “C01-46” terminal of ECM connector and vehicle body ground with connector disconnected from ECM. *Is voltage over 10 V?*	Go to Step 7.	“BLK/RED” wire is open circuit.
7	**HO2S-1 heater check** 1) Disconnect HO2S-1 connector with ignition switch turned OFF. 2) Check HO2S-1 heater resistance referring to “Heated Oxygen Sensor (HO2S-1 and HO2S-2) Heater On-Vehicle Inspection (If Equipped) in Section 1C”. *Is resistance within specified value range?*	Go to Step 8.	Replace HO2S-1.
8	**HO2S-1 heater power circuit check** 1) Connect connector to HO2S-1 with ignition switch turned OFF. 2) Measure resistance between “E01-29” and “C01-46” terminals of ECM connector. *It resistance below 12 Ω?*	HO2S-1 heater circuit is OK. Substitute a known-good ECM and recheck.	“BLK/WHT”, “BLK/RED” and / or “BLK” wire is high resistance circuit.

DTC P0037 / P0038: HO2S Heater Control Circuit Low / High (Sensor-2)

S7RW0A1104018

Wiring Diagram

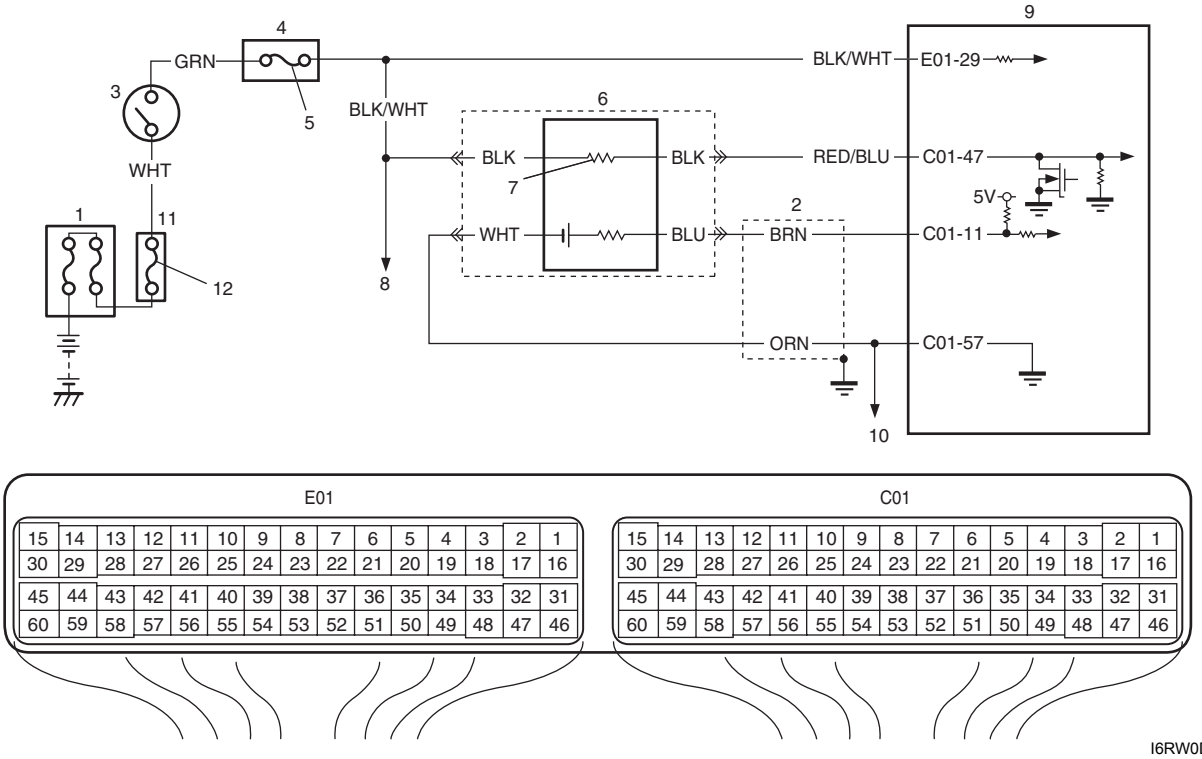

I6RW0D110021-01

1. Main fuse box	4. Junction block assembly	7. Heater	10. To HO2S-1
2. Shield wire	5. “IG COIL” fuse	8. To HO2S-1 heater	11. Individual circuit fuse box No.1
3. Ignition switch	6. HO2S-2	9. ECM	12. “IGN” fuse

DTC Detecting Condition and Trouble Area

DTC detecting condition	Trouble area
Voltage of HO2S-2 heater is more than specified value or less than specified value for 5 seconds even through its control duty ratio is within 25 – 75%. (2 driving cycle detection logic)	• HO2S-2 heater • HO2S-2 heater circuit • ECM

DTC Confirmation Procedure

1) With ignition switch turned OFF, connect scan tool.
2) Turn ON ignition switch and clear DTC using scan tool.
3) Start engine and warm up to normal operating temperature.
4) Run engine at idle speed for 1 min.
5) Check DTC and pending DTC.

DTC Troubleshooting

NOTE

Before this troubleshooting is performed, read the precautions for DTC troubleshooting referring to “Precautions for DTC Troubleshooting”.

Step	Action	Yes	No
1	*Was "Engine and Emission Control System Check" performed?*	Go to Step 2.	Go to "Engine and Emission Control System Check".
2	**HO2S-2 heater power circuit check** 1) Disconnect connector from HO2S-2 with ignition switch turned OFF. 2) Check for proper connection to HO2S-2 at "BLK/WHT" and "RED/BLU" wire terminals. 3) If wire and connection are OK, measure voltage between "BLK/WHT" wire terminal of HO2S-2 connector and engine ground with ignition switch turned ON. *Is voltage over 10 V?*	Go to Step 3.	"BLK/WHT" wire is open circuit or shorted to ground circuit.
3	**HO2S-2 heater power circuit check** 1) Disconnect connectors from ECM with ignition switch turned OFF. 2) Measure resistance between "BLK/WHT" wire terminal of HO2S-2 connector and "E01-29" terminal wire of ECM connector. *Is resistance below 5 Ω?*	Go to Step 4.	"BLK/WHT" wire is high resistance circuit.
4	**HO2S-2 heater drive circuit check** 1) Measure resistance between "RED/BLU" wire terminal of HO2S-2 connector and vehicle body ground. *Is resistance infinity?*	Go to Step 5.	"RED/BLU" wire is shorted to ground circuit.
5	**HO2S-2 heater drive circuit check** 1) Turn ON ignition switch. 2) Measure voltage between "RED/BLU" wire terminal of HO2S-2 connector and vehicle body ground. *Is voltage 0 V?*	Go to Step 6.	"RED/BLU" wire is shorted to power circuit.
6	**HO2S-2 heater drive circuit check** 1) Connect connector to HO2S-2 with ignition switch turned OFF. 2) Turn ON ignition switch. 3) Measure voltage between "C01-47" terminal of disconnected ECM connector and vehicle body ground. *Is voltage over 10 V?*	Go to Step 7.	"RED/BLU" wire is open circuit.
7	**HO2S-2 heater check** 1) Disconnect HO2S-2 connector with ignition switch turned OFF. 2) Check HO2S-2 heater resistance referring to "Heated Oxygen Sensor (HO2S-1 and HO2S-2) Heater On-Vehicle Inspection (If Equipped) in Section 1C". *Is resistance within specified value?*	Go to Step 8.	Replace HO2S-2.
8	**HO2S-2 heater power circuit check** 1) Connect connector to HO2S-2 with ignition switch turned OFF. 2) Measure resistance between "E01-29" and "C01-47" terminals of ECM connector. *Is resistance below 30 Ω?*	HO2S-2 heater circuit is OK. Substitute a known-good ECM and recheck.	"RED/BLU" wire is high resistance circuit.

DTC P0101: Mass Air Flow Circuit Range / Performance

S7RW0A1104019

Wiring Diagram

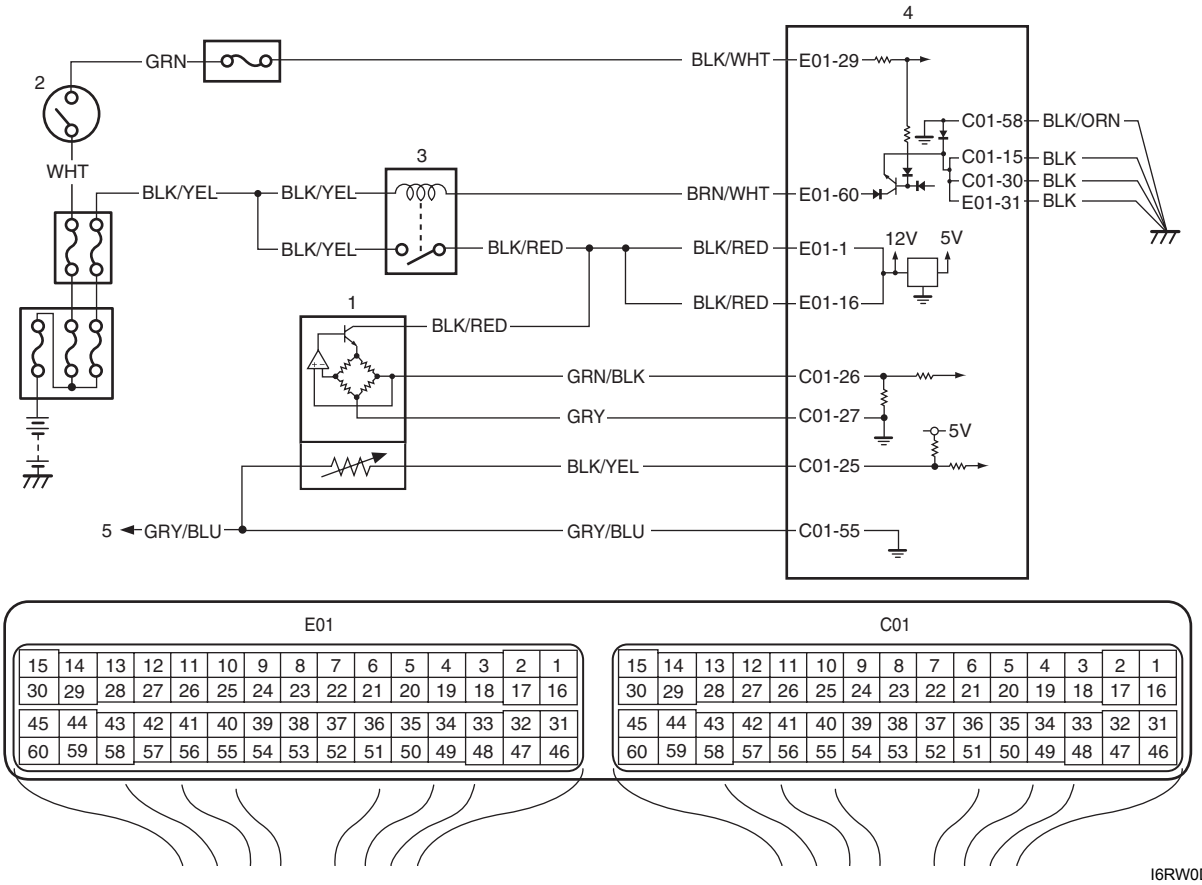

I6RW0D110022-02

1. MAF and IAT sensor	3. Main relay	5. To other sensors
2. Ignition switch	4. ECM	

DTC Detecting Condition and Trouble Area

DTC detecting condition	Trouble area
• MAF volume is greater than specified value after warming up engine with idling condition. • MAF volume is lower than specified value at high speed condition. (2 driving cycle detection logic)	• Air intake system (clog or leakage) • MAF sensor circuit • MAF sensor • TP sensor and/or its circuit • MAP sensor and/or its circuit • ECM

DTC Confirmation Procedure

⚠ WARNING

- **When performing a road test, select a place where there is no traffic or possibility of a traffic accident and be very careful during testing to avoid occurrence of an accident.**
- **Road test should be carried out by 2 persons, a driver and a tester, on a level road.**

NOTE

Check to make sure that the following conditions are satisfied when using this "DTC Confirmation Procedure".

- **Intake air temperature at engine start: –10 °C (14°F) to 80 °C (176 °F)**
- **Intake air temperature: –10 °C (14 °F) to 70 °C (158 °F)**
- **Engine coolant temperature: 70 °C (158 °F) or more**
- **Altitude (barometric pressure): 2500 m, 8200 ft or less (560 mmHg, 74.4 kPa or more)**

1) With ignition switch turned OFF, connect scan tool.
2) Turn ON ignition switch and clear DTC using scan tool.
3) Start engine and warm up to normal operating temperature. (ECT approx. 90 – 95 °C, 194 – 203 °F)
4) Drive vehicle with engine speed: more than 2500 rpm for 1 min.
5) Increase vehicle speed to 100 km/h (62 mile/h) at 5th gear or D range.
6) Release accelerator pedal to decrease vehicle speed to 40 km/h (25 mile/h).
7) Stop vehicle and run it idle for 1 min.
8) Check DTC and pending DTC.

DTC Troubleshooting

NOTE

Before this troubleshooting is performed, read the precautions for DTC troubleshooting referring to "Precautions for DTC Troubleshooting".

Step	Action	Yes	No
1	*Was "Engine and Emission Control System Check" performed?*	Go to Step 2.	Go to "Engine and Emission Control System Check".
2	**Visual inspection** Check MAF sensor and air intake system for: • Objects which block measuring duct and resistor of MAF sensor. • Other air flow which does not pass the MAF sensor. *Are they in good condition?*	Go to Step 3.	Repair or replace.
3	**MAF sensor and its circuit check** 1) With ignition switch turned OFF, install scan tool. 2) Start engine and warm up to normal operation temperature. 3) Check MAF value using scan tool. (Refer to "Scan Tool Data" for normal value.) *Is each value within specified range?*	Go to Step 11.	Go to Step 4.
4	**MAF sensor output voltage check** 1) Turn OFF ignition switch. 2) Remove ECM from its bracket with ECM connectors connected. 3) Measure voltage between "C01-26" and "C01-27" terminals of ECM connector referring to "Mass Air Flow (MAF) and Intake Air Temperature (IAT) Sensor On-Vehicle Inspection in Section 1C". *Is each value within specified range?*	Poor "C01-26" and/or "C01-27" terminal connection. If OK, substitute a known-good ECM and recheck.	Go to Step 5.

Step	Action	Yes	No
5	**MAF sensor power supply voltage check** 1) Disconnect connector from MAF and IAT sensor with ignition switch turned OFF. 2) Turn ON ignition switch, measure voltage between engine ground and “BLK/RED” wire terminal (2) of MAF and IAT sensor connector (1). 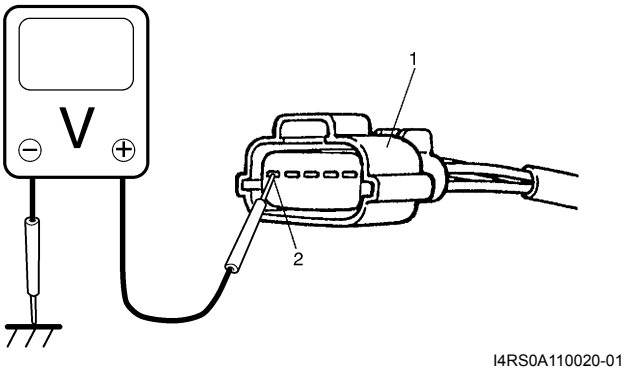 *Is voltage 10 – 14 V?*	Go to Step 6.	“BLK/RED” wire is open circuit.
6	**MAF sensor ground circuit check** 1) Turn OFF ignition switch, measure resistance between “GRY” wire terminal of MAF and IAT sensor connector and engine ground. *Is resistance below 5 Ω?*	Go to Step 8.	Go to Step 7.
7	**Ground circuit check** 1) Measure resistance between “C01-27” terminal of ECM connector and vehicle body ground. *Is resistance below 5 Ω?*	“GRY” wire is open or high resistance circuit.	ECM grounds “C01-58”, “C01-15”, “C01-30” and/or “E01-31” circuit is open or high resistance. If wires are OK, substitute a known-good ECM and recheck.
8	**MAF sensor signal circuit check** 1) Disconnect connectors from ECM with ignition switch turned OFF. 2) Turn ON ignition switch, measure voltage between “GRN/BLK” wire terminal of MAF and IAT sensor connector and engine ground. *Is voltage 0 V?*	Go to Step 9.	“GRN/BLK” wire is shorted to others circuit.
9	**MAF sensor signal circuit check** 1) Turn OFF ignition switch, measure resistance between “GRN/BLK” wire terminal of MAF and IAT sensor connector and engine ground. *Is resistance infinity?*	Go to Step 10.	“GRN/BLK” wire is shorted to ground circuit.
10	**MAF sensor signal circuit check** 1) Measure resistance between “GRN/BLK” wire terminal of MAF and IAT sensor connector and “C01-26” terminal of ECM connector. *Is resistance below 3 Ω?*	Faulty MAF and IAT sensor.	“GRN/BLK” wire is open or high resistance circuit.
11	*Is DTC P0106 displayed?*	Go to “DTC P0106: Manifold Absolute Pressure Range / Performance”.	Substitute a known-good ECM and recheck.

DTC P0102: Mass Air Flow Circuit Low Input

S7RW0A1104020

Wiring Diagram

Refer to “DTC P0101: Mass Air Flow Circuit Range / Performance”.

DTC Detecting Condition and Trouble Area

DTC detecting condition	Trouble area
Voltage of MAF sensor output is less than specified value for specified time with engine running. (1 driving cycle detection logic)	• Open or short in MAF sensor circuit • MAF sensor • ECM

DTC Confirmation Procedure

1) With ignition switch turned OFF, connect scan tool.
2) Turn ON ignition switch and clear DTC using scan tool.
3) Start engine and run it for 10 sec.
4) Check DTC and pending DTC.

DTC Troubleshooting

NOTE

Before this troubleshooting is performed, read the precautions for DTC troubleshooting referring to “Precautions for DTC Troubleshooting”.

Step	Action	Yes	No
1	*Was “Engine and Emission Control System Check” performed?*	Go to Step 2.	Go to “Engine and Emission Control System Check”.
2	**MAF sensor and its circuit check** 1) Connect scan tool to DLC with ignition switch turned OFF. 2) Start engine and check MAF value displayed on scan tool. (Refer to “Scan Tool Data” for normal value.) *Is normal value indicated?*	Intermittent trouble. Check for intermittent referring to “Intermittent and Poor Connection Inspection in Section 00”.	Go to Step 3.
3	**MAF sensor power supply voltage check** 1) Disconnect connector from MAF and IAT sensor with ignition switch turned OFF. 2) Turn ON ignition switch, measure voltage between engine ground and “BLK/RED” wire terminal of MAF and IAT sensor connector. *Is voltage 10 – 14 V?*	Go to Step 4.	“BLK/RED” wire is open circuit.
4	**MAF sensor ground circuit check** 1) Turn OFF ignition switch, measure resistance between “GRY” wire terminal of MAF and IAT sensor connector and engine ground. *Is resistance below 5 Ω?*	Go to Step 6.	Go to Step 5.
5	**Ground circuit check** 1) Remove ECM from its bracket with ECM connectors connected. 2) Measure resistance between “C01-27” terminal of ECM connector and engine ground. *Is resistance below 5 Ω?*	“GRY” wire is open or high resistance circuit.	ECM grounds “C01-58”, “C01-15”, “C01-30” and/or “E01-31” circuit is open or high resistance. If wires are OK, substitute a known-good ECM and recheck.

Step	Action	Yes	No
6	**MAF sensor signal circuit check** 1) Disconnect connectors from ECM with ignition switch turned OFF. 2) Measure voltage between “GRN/BLK” wire terminal of MAF and IAT sensor connector and engine ground with ignition switch turned ON. *Is voltage 0 V?*	Go to Step 7.	“GRN/BLK” wire is shorted to other circuit.
7	**MAF sensor signal circuit check** 1) Measure resistance between “GRN/BLK” wire terminal of MAF and IAT sensor connector and engine ground with ignition switch turned OFF. *Is resistance infinity?*	Go to Step 8.	“GRN/BLK” wire is shorted to ground circuit.
8	**MAF sensor signal circuit check** 1) Measure resistance between “GRN/BLK” wire terminal of MAF and IAT sensor connector and “C01-26” terminal of ECM connector. *Is resistance below 3 Ω?*	Go to Step 9.	“GRN/BLK” wire is open or high resistance circuit.
9	**MAF sensor output signal check** 1) Connect connectors to MAF and IAT sensor and ECM with ignition switch turned OFF. 2) Measure voltage between “C01-26” and “C01-27” terminals of ECM connector referring to “Mass Air Flow (MAF) and Intake Air Temperature (IAT) Sensor On-Vehicle Inspection in Section 1C”. *Is each value within specified range?*	Substitute a known-good ECM and recheck.	Faulty MAF and IAT sensor.

DTC P0103: Mass Air Flow Circuit High Input

S7RW0A1104021

Wiring Diagram

Refer to “DTC P0101: Mass Air Flow Circuit Range / Performance”.

DTC Detecting Condition and Trouble Area

DTC detecting condition	Trouble area
Voltage of MAF sensor output is more than specified value for specified time with engine running. (1 driving cycle detection logic)	• Open or short in MAF sensor circuit • MAF sensor • ECM

DTC Confirmation Procedure

1) With ignition switch turned OFF, connect scan tool.
2) Turn ON ignition switch and clear DTC using scan tool.
3) Start engine and run it for 10 sec.
4) Check DTC and pending DTC.

DTC Troubleshooting

NOTE

Before this troubleshooting is performed, read the precautions for DTC troubleshooting referring to "Precautions for DTC Troubleshooting".

Step	Action	Yes	No
1	*Was "Engine and Emission Control System Check" performed?*	Go to Step 2.	Go to "Engine and Emission Control System Check".
2	**MAF sensor and its circuit check** 1) Connect scan tool to DLC with ignition switch turned OFF. 2) Start engine and check MAF value displayed on scan tool. (Refer to "Scan Tool Data" for normal value.) *Is normal value indicated?*	Intermittent trouble. Check for intermittent referring to "Intermittent and Poor Connection Inspection in Section 00".	Go to Step 3.
3	**MAF sensor power supply voltage check** 1) Disconnect connector from MAF and IAT sensor with ignition switch tuned OFF. 2) Turn ON ignition switch, measure voltage between engine ground and "BLK/RED" wire terminal of MAF and IAT sensor connector. *Is voltage 10 – 14 V?*	Go to Step 4.	"BLK/RED" wire is open circuit.
4	**MAF sensor ground circuit check** 1) Turn OFF ignition switch, measure resistance between "GRY" wire terminal of MAF and IAT sensor connector and engine ground. *Is resistance below 5 Ω?*	Go to Step 6.	Go to Step 5.
5	**Ground circuit check** 1) Remove ECM from its bracket with ECM connectors connected. 2) Measure resistance between "C01-27" terminal of ECM connector and engine ground. *Is resistance below 5 Ω?*	"GRY" wire is open or high resistance circuit.	ECM grounds "C01-58", "C01-15", "C01-30" and/or "E01-31" circuit are open or high resistance. If wires are OK, substitute a known-good ECM and recheck.
6	**MAF sensor signal circuit check** 1) Disconnect connectors from ECM with ignition switch turned OFF. 2) Measure voltage between "GRY/BLK" wire terminal of MAF and IAT sensor connector and engine ground. *Is voltage 0 V?*	Go to Step 7.	"GRY/BLK" wire is shorted to other circuit.
7	**MAF sensor output signal check** 1) Connect connector to MAF and IAT sensor and ECM with ignition switch turned OFF. 2) Measure voltage between "C01-26" and "C01-27" terminal of ECM connector referring to "Mass Air Flow (MAF) and Intake Air Temperature (IAT) Sensor On-Vehicle Inspection in Section 1C". *Is each value within specified range?*	Substitute a known-good ECM and recheck.	Faulty MAF and IAT sensor.

DTC P0106: Manifold Absolute Pressure Range / Performance

S7RW0A1104022

Wiring Diagram

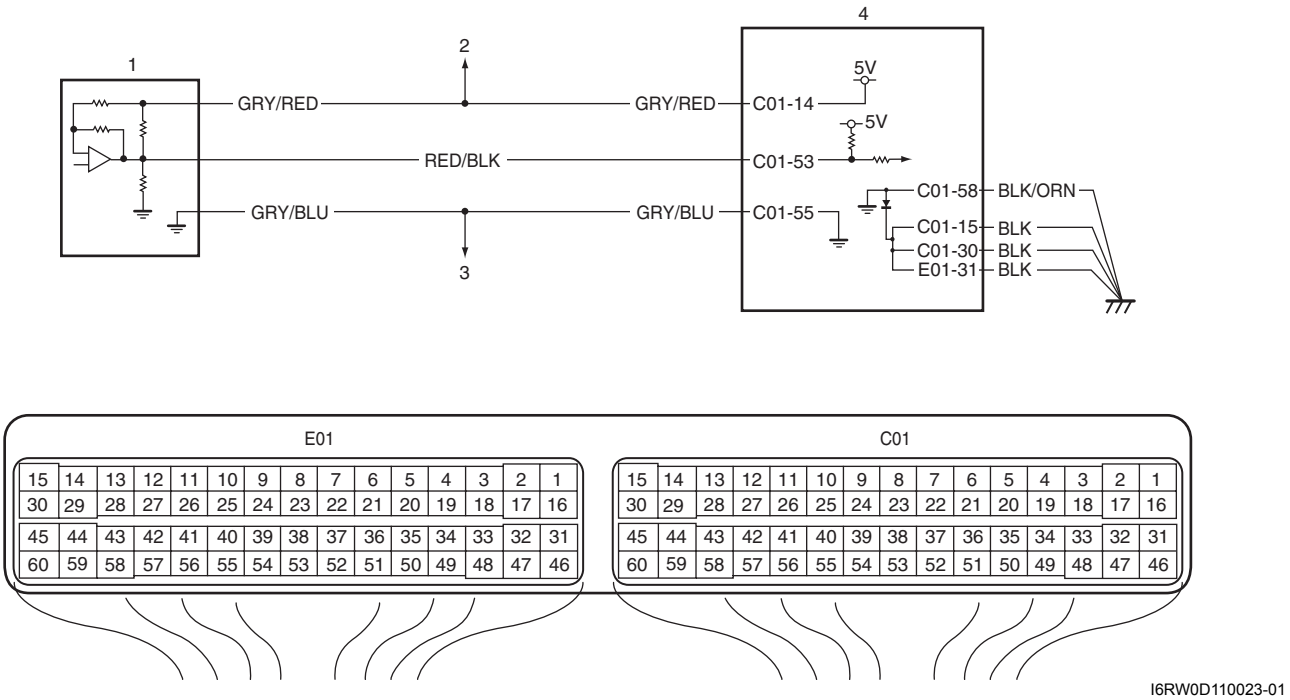

1. Manifold absolute pressure sensor	3. To other sensors
2. To A/C refrigerant pressure sensor (if equipped with A/C)	4. ECM

DTC Detecting Condition and Trouble Area

DTC detecting condition	Trouble area
• Difference between Max. manifold absolute pressure value and Min. manifold pressure value is less than specified value when engine running at idle speed. • Difference between barometric pressure value and manifold pressure value is less than specified value for 5 sec. at 2000 r/min. or more with acceleration pedal off condition. (2 driving cycle detection logic)	• Manifold absolute pressure sensor • Manifold absolute pressure sensor vacuum passage • Air intake system • ECM

DTC Confirmation Procedure

NOTE

Check to make sure that the following conditions are satisfied when using this "DTC Confirmation Procedure".

- **Intake air temperature at engine start: –10 °C (14 °F) to 80 °C (176 °F)**
- **Intake air temperature: –10 °C (14 °F) to 70 °C (158 °F)**
- **Engine coolant temperature: 70 °C (158 °F) or more**
- **Altitude (barometric pressure): 2500 m, 8200 ft or less (560 mmHg, 74.4 kPa or more)**

1) Connect scan tool to DLC with ignition switch OFF.
2) Turn ON ignition switch and clear DTC using scan tool and warm up engine completely.
3) Run engine at idle speed for 1 min.
4) Check DTC and pending DTC.

DTC Troubleshooting

NOTE

Before this troubleshooting is performed, read the precautions for DTC troubleshooting referring to "Precautions for DTC Troubleshooting".

Step	Action	Yes	No
1	*Was "Engine and Emission Control System Check" performed?*	Go to Step 2.	Go to "Engine and Emission Control System Check".
2	**MAP sensor and its circuit check** 1) Connect scan tool to DLC with ignition switch turned OFF. 2) Turn ON ignition switch. 3) Check DTC. *Is there DTC P0107 or DTC P0108?*	Go to applicable DTC diag. flow.	Go to Step 3.
3	**MAP sensor output signal check** 1) Check MAP sensor according to "Manifold Absolute Pressure (MAP) Sensor Inspection (If Equipped) in Section 1C". *Is it in good condition?*	Go to Step 4.	Faulty MAP sensor.
4	**MAP sensor circuit check** 1) Check MAP sensor circuit referring to Step 3 to 6 of "DTC P0107: Manifold Absolute Pressure Circuit Low Input" or Step 3 to 8 of "DTC P0108: Manifold Absolute Pressure Circuit High Input". *Is circuit in good condition?*	Go to Step 5.	Repair or replace.
5	**Air intake system check** 1) Check air intake system for clog or leak. *Is it in good condition?*	Substitute a known-good ECM and recheck.	Repair or replace.

DTC P0107: Manifold Absolute Pressure Circuit Low Input

S7RW0A1104023

Wiring Diagram

Refer to "DTC P0106: Manifold Absolute Pressure Range / Performance".

DTC Detecting Condition and Trouble Area

DTC detecting condition	Trouble area
Manifold absolute pressure sensor output voltage is lower than specified value for specified time. (1 driving cycle detection logic)	• Manifold absolute pressure sensor circuit • Manifold absolute pressure sensor • A/C refrigerant pressure sensor (if equipped with A/C) • ECM

DTC Confirmation Procedure

1) Connect scan tool to DLC with ignition switch turned OFF.
2) Turn ON ignition switch and clear DTC using scan tool and warm up engine completely.
3) Run engine at idle speed for 1 min.
4) Check DTC and pending DTC.

DTC Troubleshooting

NOTE

Before this troubleshooting is performed, read the precautions for DTC troubleshooting referring to "Precautions for DTC Troubleshooting".

Step	Action	Yes	No
1	*Was "Engine and Emission Control System Check" performed?*	Go to Step 2.	Go to "Engine and Emission Control System Check".
2	**MAP sensor and its circuit check** 1) Connect scan tool to DLC with ignition switch turned OFF. 2) Turn ON ignition switch. 3) Check intake manifold pressure displayed on scan tool. *Is it 0 kPa (0 in.Hg)?*	Go to Step 3.	Intermittent trouble. Check for intermittent referring to "Intermittent and Poor Connection Inspection in Section 00".
3	**MAP sensor power supply voltage check** 1) Disconnect connector from MAP sensor with ignition switch turned OFF. 2) Check for proper connection of MAP sensor at "GRY/RED", "RED/BLK" and "GRY/BLU" wire terminals. 3) Turn ON ignition switch, measure voltage between engine ground and "GRY/RED" wire terminal of MAP sensor connector. 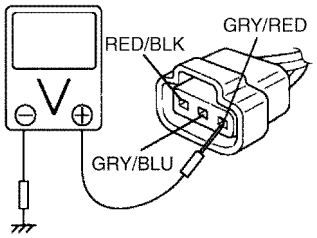 I5RW0A110021-01 *Is voltage 4 – 6 V?*	Go to Step 5.	Go to Step 4.
4	**MAP sensor power supply circuit check** 1) Disconnect connectors from A/C refrigerant pressure sensor (if equipped with A/C) with ignition switch turned OFF. 2) Turn ON ignition switch, measure voltage between engine ground and "GRY/RED" wire terminal of MAP sensor connector. *Is voltage 4 – 6 V?*	Faulty A/C refrigerant pressure sensor (if equipped with A/C).	"GRY/RED" wire is shorted to ground circuit. If wires are OK, substitute a known-good ECM and recheck.
5	**MAP sensor signal circuit check** 1) Measure voltage between "RED/BLK" wire terminal of MAP sensor connector and engine ground. *Is voltage 4 – 6 V?*	Go to Step 7.	Go to Step 6.
6	**MAP sensor signal circuit check** 1) Disconnect connectors from ECM with ignition switch turned OFF. 2) Measure resistance between "C01-53" terminal of ECM connector and vehicle body ground. *Is resistance infinity?*	Go to Step 7.	"RED/BLK" wire is shorted to ground circuit.

Step	Action	Yes	No
7	**MAP sensor output signal check** 1) Check MAP sensor according to “Manifold Absolute Pressure (MAP) Sensor Inspection (If Equipped) in Section 1C”. *Is it in good condition?*	Substitute a known-good ECM and recheck.	Faulty MAP sensor.

DTC P0108: Manifold Absolute Pressure Circuit High Input

S7RW0A1104024

Wiring Diagram

Refer to “DTC P0106: Manifold Absolute Pressure Range / Performance”.

DTC Detecting Condition and Trouble Area

DTC detecting condition	Trouble area
Manifold absolute pressure sensor output voltage is higher than specified value for specified time. (1 driving cycle detection logic)	• Manifold absolute pressure sensor circuit • Manifold absolute pressure sensor • A/C refrigerant pressure sensor (if equipped with A/C) • ECM

NOTE

When DTC P0113 and P0118 are indicated together, it is possible that “GRY/BLU” wire circuit is open.

DTC Confirmation Procedure

1) Connect scan tool to DLC with ignition switch turned OFF.
2) Turn ON ignition switch and clear DTC using scan tool and warm up engine completely.
3) Run engine at idle speed for 1 min.
4) Check DTC and pending DTC.

DTC Troubleshooting

NOTE

Before this troubleshooting is performed, read the precautions for DTC troubleshooting referring to “Precautions for DTC Troubleshooting”.

Step	Action	Yes	No
1	*Was “Engine and Emission Control System Check” performed?*	Go to Step 2.	Go to “Engine and Emission Control System Check”.
2	**MAP sensor and its circuit check** 1) Connect scan tool to DLC with ignition switch OFF. 2) Turn ignition switch ON. 3) Check intake manifold pressure displayed on scan tool. *Is it 127 kPa (37.5 in.Hg)?*	Go to Step 3.	Intermittent trouble. Check for intermittent referring to “Intermittent and Poor Connection Inspection in Section 00”.

Step	Action	Yes	No
3	**MAP sensor power supply voltage check** 1) Disconnect connector from MAP sensor with ignition switch turned OFF. 2) Check for proper connection of MAP sensor at “GRY/RED”, “RED/BLK” and “GRY/BLU” wire terminals. 3) Turn ON ignition switch, measure voltage between engine ground and “GRY/RED” wire terminal of MAP sensor connector. 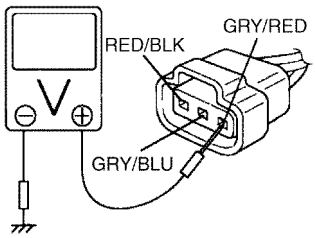 I5RW0A110021-01 *Is voltage 4 – 6 V?*	Go to Step 5.	Go to Step 4.
4	**MAP sensor power supply circuit check** 1) Disconnect connectors from A/C refrigerant pressure sensor (if equipped with A/C) with ignition switch turned OFF. 2) Turn ON ignition switch, measure voltage between engine ground and “GRY/RED” wire terminal of MAP sensor connector. *Is voltage 4 – 6 V?*	Faulty A/C refrigerant pressure sensor (if equipped with A/C).	“GRY/RED” wire is open or shorted to power circuit.
5	**MAP sensor ground circuit check** 1) Measure resistance between “GRY/BLU” wire terminal of MAP sensor connector and engine ground with ignition switch turned OFF. *Is resistance below 5 Ω?*	Go to Step 7.	Go to Step 6.
6	**Ground circuit check** 1) Measure resistance between “C01-55” terminal of ECM connector and vehicle body ground. *Is resistance below 5 Ω?*	“GRY/BLU” wire is open or high resistance circuit.	ECM grounds “C01-58”, “C01-15”, “C01-30” and/or “E01-31” circuit are open or high resistance. If wires are OK, substitute a known-good ECM and recheck.
7	**MAP sensor signal circuit check** 1) Turn ON ignition switch. 2) Measure voltage between “RED/BLK” wire terminal of MAP sensor connector and engine ground. *Is voltage 4 – 6 V?*	Go to Step 9.	Go to Step 8.
8	**MAP sensor signal circuit check** 1) Disconnect connectors from ECM with ignition switch turned OFF. 2) Measure resistance between “RED/BLK” wire terminal of MAP sensor connector and “C01-53” terminal of ECM connector. *Is resistance below 2 Ω?*	“RED/BLK” wire is shorted to power supply circuit.	“RED/BLK” wire is open or high resistance circuit.

Step	Action	Yes	No
9	**MAP sensor output signal check** 1) Check MAP sensor according to “Manifold Absolute Pressure (MAP) Sensor Inspection (If Equipped) in Section 1C”. *Is it in good condition?*	Substitute a known-good ECM and recheck.	Faulty MAP sensor.

DTC P0111: Intake Air Temperature Circuit Range / Performance

S7RW0A1104025

Wiring Diagram

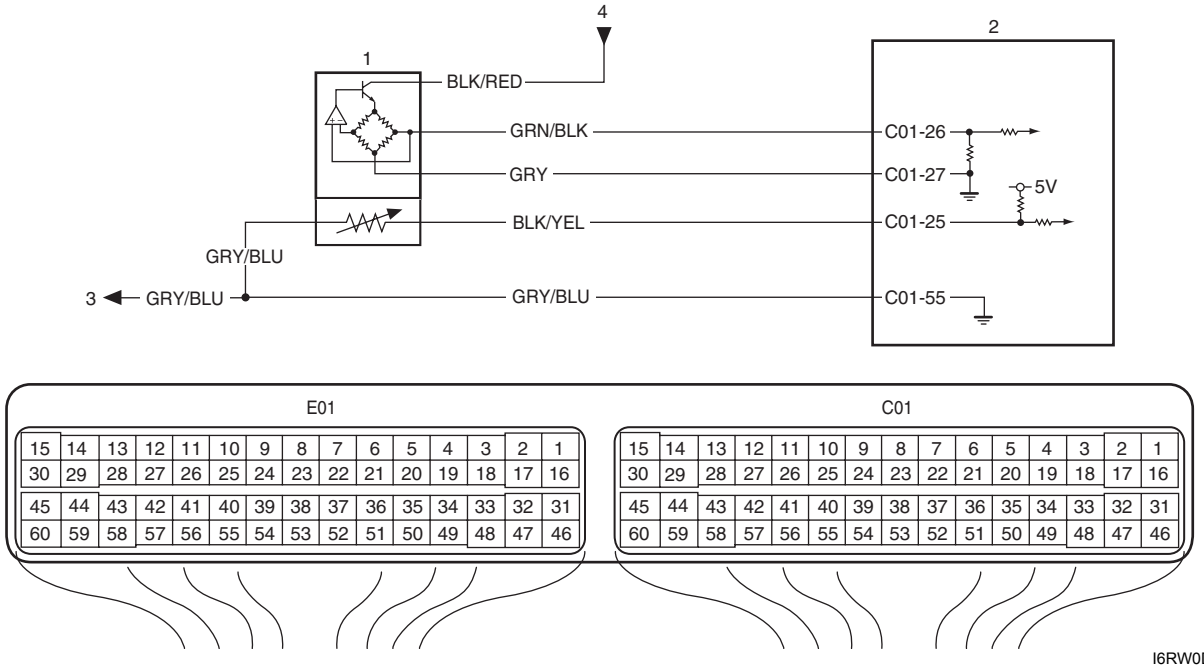

I6RW0D110024-01

1. MAF and IAT sensor	3. To other sensors
2. ECM	4. From main relay

DTC Detecting Condition and Trouble Area

DTC detecting condition	Trouble area
Difference of maximum IAT minus minimum IAT is less than specified value while ECT is over 70 °C (158 °F) after 10 min from cold engine start (ECT is lower than 30°C (86 °F) at engine start). (2 driving cycle detection logic)	• High resistance circuit • MAF and IAT sensor • ECM

DTC Confirmation Procedure

NOTE

Check to make sure that following conditions are satisfied when using this “DTC Confirmation Procedure”.

- **Intake air temperature at engine start: –10 °C (14 °F) to 80 °C (176 °F)**
- **Intake air temperature: –10 °C (14 °F) to 70 °C (158 °F)**
- **Engine coolant temperature at engine start: less than 30 °C (86 °F)**
- **Engine coolant temperature: 70 °C (158 °F) or more**
- **Altitude (barometric pressure): 2500 m, 8200 ft or less (560 mmHg, 74.4 kPa or more)**

1) With ignition switch turned OFF, connect scan tool.
2) Turn ON ignition switch, clear DTC using scan tool.
3) Start engine and warm up to normal operating temperature. (ECT approx. 90 – 95 °C, 194 – 203 °F)
4) Run engine at idle speed for 10 min. or more.

5) Check DTC and pending DTC.

DTC Troubleshooting

NOTE

Before this troubleshooting is performed, read the precautions for DTC troubleshooting referring to "Precautions for DTC Troubleshooting".

Step	Action	Yes	No
1	*Was "Engine and Emission Control System Check" performed?*	Go to Step 2.	Go to "Engine and Emission Control System Check".
2	**IAT sensor and its circuit check** 1) Connect scan tool to DLC with ignition switch turned OFF. 2) Turn ignition switch to ON position. 3) Check intake air temp. displayed on scan tool. *Is –40 °C (–40 °F) or 119 °C (246 °F) indicated?*	Go to Step 3.	Intermittent trouble. Check for intermittent referring to "Intermittent and Poor Connection Inspection in Section 00".
3	**Wire harness check** 1) Disconnect MAF and IAT sensor connector (1) with ignition switch turned OFF. 2) Check for proper connection to MAF and IAT sensor connector (1) at "BLK/YEL" and "GRY/BLU" wire terminals. 3) If OK, then with ignition switch turned ON, measure voltage between "BLK/YEL" wire terminal of MAF and IAT sensor connector and vehicle body ground. 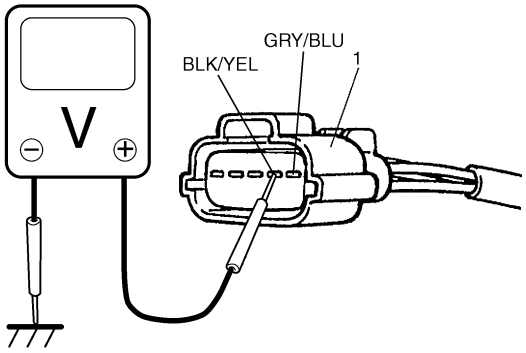 *Is measured voltage applied to "BLK/YEL" wire terminal about 4 – 6 V?*	Go to Step 8.	Go to Step 4.
4	**ECM voltage check** 1) Turn OFF ignition switch. 2) Remove ECM from its bracket with ECM connectors connected. 3) Check for proper connection of ECM connector at "C01-25" terminal. 4) If OK, then turn ON ignition switch, measure voltage between "C01-25" terminal of ECM connector and vehicle body ground. *Is voltage about 4 – 6 V at terminal?*	"BLK/YEL" wire is open circuit. If wire and connection are OK, go to Step 5.	Go to Step 5.

Step	Action	Yes	No
5	**Wire circuit check** 1) Disconnect connectors from ECM with ignition switch turned OFF. 2) Measure resistance between “BLK/YEL” wire terminal of MAF and IAT sensor connector and vehicle body ground. *Is resistance infinity?*	Go to Step 6.	“BLK/YEL” wire is shorted to ground or other circuit. If wire is OK, substitute a known-good ECM and recheck.
6	**Wire circuit check** 1) Turn ignition switch to ON position. 2) Measure voltage between “BLK/YEL” wire terminal of MAF and IAT sensor connector and vehicle body ground. *Is voltage about 0 V?*	Go to Step 7.	“BLK/YEL” wire shorted to other circuit. If wire is OK, substitute a known-good ECM and recheck.
7	**Wire circuit check** 1) Measure resistance between “C01-25” terminal of ECM connector and “BLK/YEL” wire terminal of MAF and IAT sensor connector with ignition switch turned OFF. *Is resistance below 3 Ω?*	Go to Step 8.	“BLK/YEL” wire is high resistance circuit.
8	**Ground circuit check** 1) Connect connectors to ECM. 2) Check for proper connection of MAF and IAT sensor connector at “GRY/BLU” wire terminal. 3) Measure resistance between “GRY/BLU” wire terminal of MAF and IAT sensor connector and vehicle body ground with ignition switch turned OFF. *Is resistance below 5 Ω?*	Go to Step 10.	Go to Step 9.
9	**Ground circuit check** 1) Remove ECM from its bracket with ECM connectors connected. 2) Measure resistance between “C01-55” terminal of ECM connector and vehicle body ground. *Is resistance below 3 Ω?*	“GRY/BLU” wire is open or high resistance circuit. Poor “C01-55” connection.	Faulty ECM ground circuit. If circuit is OK, substitute a known-good ECM and recheck.
10	**IAT sensor check** 1) Check IAT sensor according to “Intake Air Temperature (IAT) Sensor Inspection in Section 1C”. *Is it in good condition?*	Substitute a known-good ECM and recheck.	Replace MAF and IAT sensor.

DTC P0112: Intake Air Temperature Sensor Circuit Low

S7RW0A1104026

Wiring Diagram

Refer to “DTC P0111: Intake Air Temperature Circuit Range / Performance”.

DTC Detecting Condition and Trouble Area

DTC detecting condition	Trouble area
Voltage of IAT sensor output is less than specified value with engine running. (High intake air temperature (low voltage / low resistance)) (1 driving cycle detection logic)	• IAT sensor circuit • IAT sensor • ECM

DTC Confirmation Procedure

1) With ignition switch turned OFF, connect scan tool.
2) Turn ON ignition switch and clear DTC using scan tool.
3) Start engine and run it for 10 sec.
4) Check DTC and pending DTC.

DTC Troubleshooting

NOTE

Before this troubleshooting is performed, read the precautions for DTC troubleshooting referring to "Precautions for DTC Troubleshooting".

Step	Action	Yes	No
1	*Was "Engine and Emission Control System Check" performed?*	Go to Step 2.	Go to "Engine and Emission Control System Check".
2	**IAT sensor and its circuit check** 1) Connect scan tool to DLC with ignition switch turned OFF. 2) Turn ON ignition switch. 3) Check intake air temp. displayed on scan tool. *Is 119 °C (246 °F) indicated?*	Go to Step 3.	Intermittent trouble. Check for intermittent referring to "Intermittent and Poor Connection Inspection in Section 00".
3	**ECM voltage check** 1) Disconnect connector from MAF and IAT sensor with ignition switch turned OFF. 2) Check for proper connection to MAF and IAT sensor at "BLK/YEL" and "GRY/BLU" wire terminals. 3) If OK, then turn ON ignition switch, measure voltage between "BLK/YEL" wire terminal of MAF and IAT sensor connector (1) and vehicle body ground. 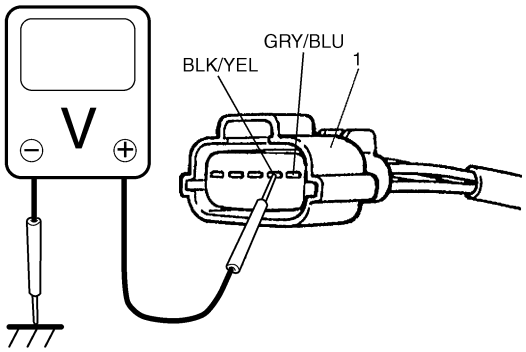 *Is voltage about 4 – 6 V?*	Go to Step 6.	Go to Step 4.
4	**IAT short circuit check** 1) Disconnect connectors from ECM with ignition switch turned OFF. 2) Measure resistance between "BLK/YEL" wire terminal of MAF and IAT sensor connector and vehicle body ground. *Is resistance infinity?*	Go to Step 5.	"BLK/YEL" wire is shorted to ground circuit. If wire is OK, substitute a known-good ECM and recheck.

Step	Action	Yes	No
5	**IAT short circuit check** 1) Turn ON ignition switch. 2) Measure voltage between “BLK/YEL” wire terminal of MAF and IAT sensor connector and vehicle body ground. *Is voltage about 0 V?*	Go to Step 6.	“BLK/YEL” wire is shorted to other circuit. If wire is OK, substitute a known-good ECM and recheck.
6	**IAT sensor for performance check** 1) Check IAT sensor according to “Intake Air Temperature (IAT) Sensor Inspection in Section 1C”. *Is it in good condition?*	Substitute a known-good ECM and recheck.	Replace MAF and IAT sensor.

DTC P0113: Intake Air Temperature Sensor Circuit High

S7RW0A1104027

Wiring Diagram

Refer to “DTC P0111: Intake Air Temperature Circuit Range / Performance”.

DTC Detecting Condition and Trouble Area

DTC detecting condition	Trouble area
Voltage of IAT sensor output is more than specified value with engine running. (Low intake air temperature (high voltage / high resistance)) (1 driving cycle detection logic)	• IAT sensor circuit • IAT sensor • ECM

NOTE

When DTC P0108 and P0118 are indicated together, it is possible that “GRY/BLU” wire circuit is open.

DTC Confirmation Procedure

1) With ignition switch turned OFF, connect scan tool.
2) Turn ON ignition switch and clear DTC using scan tool.
3) Start engine and run it for 10 sec.
4) Check DTC and pending DTC.

DTC Troubleshooting

NOTE

Before this troubleshooting is performed, read the precautions for DTC troubleshooting referring to “Precautions for DTC Troubleshooting”.

Step	Action	Yes	No
1	*Was “Engine and Emission Control System Check” performed?*	Go to Step 2.	Go to “Engine and Emission Control System Check”.
2	**IAT sensor and its circuit check** 1) Connect scan tool to DLC with ignition switch turned OFF. 2) Turn ON ignition switch. 3) Check intake air temp. displayed on scan tool. *Is –40 °C (–40 °F) indicated?*	Go to Step 3.	Intermittent trouble. Check for intermittent referring to “Intermittent and Poor Connection Inspection in Section 00”.

Step	Action	Yes	No
3	**IAT sensor voltage check** 1) Disconnect connector from MAF and IAT sensor with ignition switch turned OFF. 2) Check for proper connection to MAF and IAT sensor at “BLK/YEL” and “GRY/BLU” wire terminals. 3) If OK, then turn ON ignition switch, measure voltage between “BLK/YEL” wire terminal of MAF and IAT sensor connector (1) and vehicle body ground. 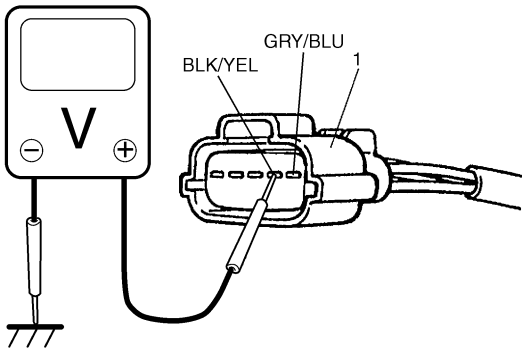 *Is voltage about 4 – 6 V?*	Go to Step 7.	Go to Step 4.
4	**ECM voltage check** 1) Turn OFF ignition switch. 2) Remove ECM from its bracket with ECM connectors connected. 3) Check for proper connection of ECM connector at “C01-25” terminal. 4) If OK, then turn ON ignition switch, measure voltage between “C01-25” terminal of ECM connector and vehicle body ground. *Is voltage about 4 – 6 V?*	“BLK/YEL” wire is open circuit. If wire and connection are OK, go to Step 5.	Go to Step 5.
5	**Wire circuit check** 1) Disconnect connectors from ECM with ignition switch turned OFF. 2) Turn ON ignition switch. 3) Measure voltage between “BLK/YEL” wire terminal of MAF and IAT sensor connector and vehicle body ground. *Is voltage about 0 V?*	Go to Step 6.	“BLK/YEL” wire is shorted to other circuit. If wire is OK, substitute a known-good ECM and recheck.
6	**Wire circuit check** 1) Measure resistance between “C01-25” terminal of ECM connector and “BLK/YEL” wire terminal of MAF and IAT sensor connector with ignition switch turned OFF. *Is resistance below 5 Ω?*	Go to Step 7.	“BLK/YEL” wire is high resistance circuit.
7	**Ground circuit check** 1) Connect connectors to ECM. 2) Measure resistance between “GRY/BLU” wire terminal of MAF and IAT sensor connector and vehicle body ground with ignition switch turned OFF. *Is resistance below 5 Ω?*	Go to Step 9.	Go to Step 8.

Step	Action	Yes	No
8	**Ground circuit check** 1) Remove ECM from its bracket with ECM connectors connected. 2) Measure resistance between “C01-55” terminal of ECM connector and vehicle body ground. *Is resistance below 5 Ω?*	“GRY/BLU” wire is open circuit or high resistance circuit. Poor “C01-55” connection.	Faulty ECM ground circuit. If circuit is OK, substitute a known-good ECM and recheck.
9	**IAT sensor for performance check** 1) Check IAT sensor according to “Intake Air Temperature (IAT) Sensor Inspection in Section 1C”. *Is it in good condition?*	Substitute a known-good ECM and recheck.	Replace MAF and IAT sensor.

DTC P0116: Engine Coolant Temperature Circuit Range / Performance

S7RW0A1104028

Wiring Diagram

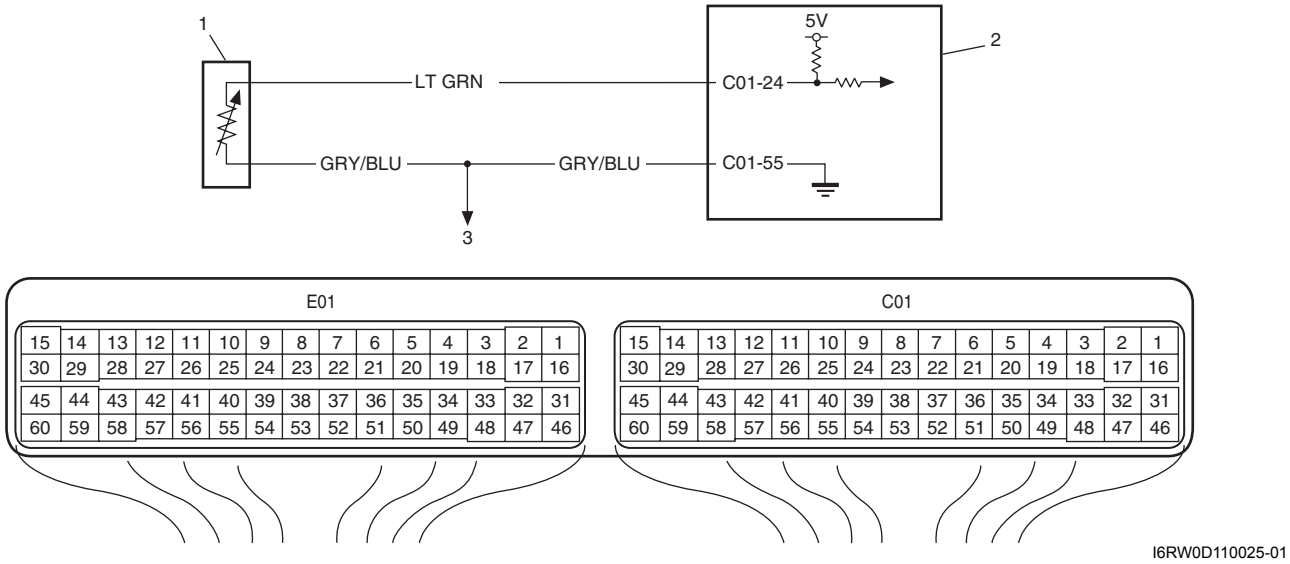

1. ECT sensor	2. ECM	3. To other sensors

DTC Detecting Condition and Trouble Area

DTC detecting condition	Trouble area
ECT sensor values is less than temperature at A/F feedback start while engine is running under more than specified engine load (more than 1000 rpm) for specified time (depending on ECT at engine start (ex. 5 min at –10 °C, –4 °F)) continuously from engine start. (2 driving cycle detecting logic)	• ECT sensor • ECT sensor circuit • Thermostat • ECM

DTC Confirmation Procedure

⚠ WARNING

- **When performing a road test, select a place where there is no traffic or possibility of a traffic accident and be very careful during testing to avoid occurrence of an accident.**
- **Road test should be carried out by 2 persons, a driver and tester, on a level road.**

NOTE

Check to make sure that following conditions are satisfied when using this "DTC Confirmation Procedure".

- **Intake air temperature at engine start: –10 °C (14 °F) to 80 °C (176 °F)**
- **Intake air temperature: –10 °C (14 °F) to 70 °C (158 °F)**
- **Altitude (barometric pressure): 2500 m, 8200 ft or less (560 mmHg, 74.4 kPa or more)**

1) With ignition switch turned OFF, connect scan tool.
2) Turn ON ignition switch, clear DTC.
3) Start engine.
4) Drive vehicle at 40 mph (60 km/h) or higher for 20 min. or more.
5) Stop vehicle.
6) Check DTC and pending DTC.

DTC Troubleshooting

NOTE

Before this troubleshooting is performed, read the precautions for DTC troubleshooting referring to "Precautions for DTC Troubleshooting".

Step	Action	Yes	No
1	*Was "Engine and Emission Control System Check" performed?*	Go to Step 2.	Go to "Engine and Emission Control System Check".
2	**DTC check** 1) With ignition switch turned OFF, install scan tool to DLC. 2) Turn ON ignition switch and check DTC with scan tool. *Is DTC P0118 displayed?*	Go to "DTC P0118: Engine Coolant Temperature Circuit High".	Go to Step 3.
3	**Engine coolant temp. check** 1) Turn ON ignition switch and check engine coolant temp. displayed on scan tool. 2) Warm up engine to normal operating temp. and check engine coolant temp. displayed on scan tool. *Does engine coolant temp. vary more than 1 °C (1 °F) and rise higher than 70 °C (158 °F)?*	Intermittent trouble. Check for intermittent referring to "Intermittent and Poor Connection Inspection in Section 00".	Go to Step 4.
4	**Thermostat check** *Is there a symptom due to thermostat remaining open (it takes a long time before vehicle heater becomes effective or before engine is warmed to normal operating temp., etc.)?*	Check thermostat referring to "Thermostat Inspection in Section 1F".	Go to Step 5.

Step	Action	Yes	No
5	**Wire harness check** 1) Disconnect ECT sensor connector with ignition switch turned OFF. 2) Check for proper connection to ECT sensor connector at “GRY/BLU” and “LT GRN” wire terminals. 3) If OK, then with ignition switch ON, measure voltage between “LT GRN” wire terminal of ECT sensor connector and vehicle body ground. 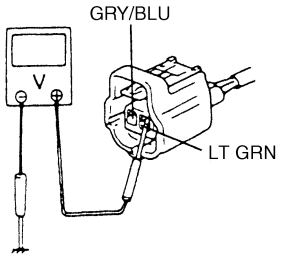 I5RW0A110024-01 *Is measured voltage applied to “LT GRN” wire terminal about 4 – 6 V?*	Go to Step 9.	Go to Step 6.
6	**ECM voltage check** 1) Turn OFF ignition switch. 2) Remove ECM from its bracket with ECM connectors connected. 3) Check for proper connection of ECM connector at “C01-24” terminal. 4) If OK, then turn ON ignition switch, measure voltage between “C01-24” terminal of ECM connector and vehicle body ground. *Is voltage about 4 – 6 V?*	“LT GRN” wire is open circuit. If wire and connection are OK, go to Step 7.	Go to Step 7.
7	**Wire circuit check** 1) Disconnect connectors from ECM with ignition switch turned OFF. 2) Turn ignition switch to ON position. 3) Measure voltage between “LT GRN” wire terminal of ECT sensor connector and body ground. *Is voltage about 0 V?*	Go to Step 8.	“LT GRN” wire is shorted to other circuit. If wire is OK, substitute a known-good ECM and recheck.
8	**Wire circuit check** 1) Measure resistance between “C01-24” terminal of ECM connector and “LT GRN” wire terminal of ECT sensor connector with ignition switch turned OFF. *Is resistance below 5 Ω?*	Go to Step 9.	“LT GRN” wire is high resistance circuit.
9	**Ground circuit check** 1) Connect connectors to ECM. 2) Check for proper connection of ECT sensor connector at “GRY/BLU” wire terminal. 3) Measure resistance between “GRY/BLU” wire terminal of ECT sensor connector and vehicle body ground. *Is resistance below 5 Ω?*	Go to Step 11.	Go to Step 10.

Step	Action	Yes	No
10	**Ground circuit check** 1) Remove ECM from its bracket with ECM connectors connected. 2) Measure resistance between “C01-55” terminal of ECM connector and vehicle body ground. *Is resistance below 5 Ω?*	“GRY/BLU” wire is high resistance circuit. Poor “C01-55” connection.	Faulty ECM ground circuit. If circuit is OK, substitute a known-good ECM and recheck.
11	**ECT sensor check** 1) Check ECT sensor according to “Engine Coolant Temperature (ECT) Sensor Inspection in Section 1C”. *Is it in good condition?*	Substitute a known-good ECM and recheck.	Replace ECT sensor.

DTC P0117: Engine Coolant Temperature Circuit Low

S7RW0A1104029

Wiring Diagram

Refer to “DTC P0116: Engine Coolant Temperature Circuit Range / Performance”.

DTC Detecting Condition and Trouble Area

DTC detecting condition	Trouble area
Voltage of ECT sensor output is less than specified value with engine running. (High engine coolant temperature (low voltage / low resistance)) (1 driving cycle detection logic)	• ECT sensor circuit • ECT sensor • ECM

DTC Confirmation Procedure

1) With ignition switch turned OFF, connect scan tool.
2) Turn ON ignition switch and clear DTC using scan tool.
3) Start engine and run it for 10 sec. or more.
4) Check DTC and pending DTC.

DTC Troubleshooting

NOTE

Before this troubleshooting is performed, read the precautions for DTC troubleshooting referring to “Precautions for DTC Troubleshooting”.

Step	Action	Yes	No
1	*Was “Engine and Emission Control System Check” performed?*	Go to Step 2.	Go to “Engine and Emission Control System Check”.
2	**ECT sensor and its circuit check** 1) Connect scan tool with ignition switch turned OFF. 2) Turn ON ignition switch. 3) Check engine coolant temp. displayed on scan tool. *Is 119 °C (246 °F) indicated?*	Go to Step 3.	Intermittent trouble. Check for intermittent referring to “Intermittent and Poor Connection Inspection in Section 00”.

Step	Action	Yes	No
3	**ECM voltage check** 1) Disconnect connector from ECT sensor with ignition switch turned OFF. 2) Check for proper connection to ECT sensor at “LT GRN” and “GRY/BLU” wire terminals. 3) If OK, then turn ON ignition switch, measure voltage between “LT GRN” wire terminal of ECT sensor connector and vehicle body ground. 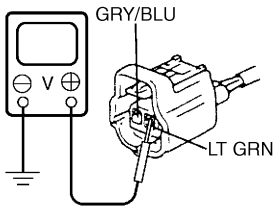 I5RW0A110025-01 *Is voltage about 4 – 6 V?*	Go to Step 6.	Go to Step 4.
4	**ECT sensor short circuit check** 1) Disconnect connectors from ECM with ignition switch turned OFF. 2) Measure resistance between “LT GRN” wire terminal of ECT sensor connector and vehicle body ground. *Is resistance infinity?*	Go to Step 5.	“LT GRN” wire is shorted to ground circuit. If wire is OK, substitute a known-good ECM and recheck.
5	**ECT sensor short circuit check** 1) Turn ON ignition switch. 2) Measure voltage between “LT GRN” wire terminal of ECT sensor connector and vehicle body ground. *Is voltage about 0 V?*	Go to Step 6.	“LT GRN” wire is shorted to other circuit. If wire is OK, substitute a known-good ECM and recheck.
6	**ECT sensor for performance check** 1) Check ECT sensor according to “Engine Coolant Temperature (ECT) Sensor Inspection in Section 1C”. *Is it in good condition?*	Substitute a known-good ECM and recheck.	Replace ECT sensor.

DTC P0118: Engine Coolant Temperature Circuit High

S7RW0A1104030

Wiring Diagram

Refer to “DTC P0116: Engine Coolant Temperature Circuit Range / Performance”.

DTC Detecting Condition and Trouble Area

DTC detecting condition	Trouble area
Voltage of ECT sensor output is more than specified value with engine running. (Low engine coolant temperature (high voltage / high resistance)) (1 driving cycle detection logic)	• ECT sensor circuit • ECT sensor • ECM

NOTE

When DTC P0108 and P0113 are indicated together, it is possible that “GRY/BLU” wire circuit open.

DTC Confirmation Procedure

1) With ignition switch turned OFF, connect scan tool.
2) Turn ON ignition switch and clear DTC using scan tool.
3) Start engine and run it for 10 sec. or more.
4) Check DTC and pending DTC.

DTC Troubleshooting

NOTE

Before this troubleshooting is performed, read the precautions for DTC troubleshooting referring to "Precautions for DTC Troubleshooting".

Step	Action	Yes	No
1	*Was "Engine and Emission Control System Check" performed?*	Go to Step 2.	Go to "Engine and Emission Control System Check".
2	**ECT sensor and its circuit check** 1) Connect scan tool with ignition switch turned OFF. 2) Turn ON ignition switch. 3) Check engine coolant temp. displayed on scan tool. *Is –40 °C (–40 °F) indicated?*	Go to Step 3.	Intermittent trouble. Check for intermittent referring to "Intermittent and Poor Connection Inspection in Section 00".
3	**ECT voltage check** 1) Disconnect connector from ECT sensor with ignition switch turned OFF. 2) Check for proper connection to ECT sensor at "LT GRN" and "GRY/BLU" wire terminals. 3) If OK, then turn ON ignition switch, measure voltage between "LT GRN" wire terminal of ECT sensor connector and vehicle body ground. 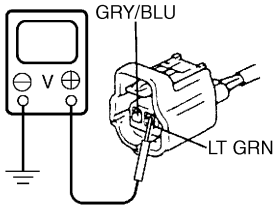 I5RW0A110025-01 *Is voltage about 4 – 6 V?*	Go to Step 6.	Go to Step 4.
4	**ECM voltage check** 1) Turn OFF ignition switch. 2) Remove ECM from its bracket with ECM connectors connected. 3) Check for proper connection of ECM connector at "C01-24" terminal. 4) If OK, then turn ON ignition switch, measure voltage between "C01-24" wire terminal of ECM connector and vehicle body ground. *Is voltage about 4 – 6 V?*	"LT GRN" wire is open circuit. If wire and connection are OK, go to Step 5.	Go to Step 5.
5	**ECT sensor harness voltage check** 1) Disconnect connectors from ECM with ignition switch turned OFF. 2) Turn ON ignition switch. 3) Measure voltage between "LT GRN" wire terminal of ECT sensor connector and vehicle body ground. *Is voltage about 0 V?*	Go to Step 6.	"LT GRN" wire is shorted to other circuit. If wire is OK, substitute a known-good ECM and recheck.

Step	Action	Yes	No
6	**ECT sensor harness resistance check** 1) Measure resistance between “C01-24” terminal of ECM connector and “LT GRN” wire terminal of ECT sensor connector with ignition switch turn OFF. *Is resistance below 5 Ω?*	Go to Step 7.	“LT GRN” wire is high resistance circuit.
7	**ECT sensor ground circuit check** 1) Connect connectors to ECM. 2) Check for proper connection of ECT sensor connector at “GRY/BLU” wire terminal. 3) Measure resistance between “GRY/BLU” wire terminal of ECT sensor connector and vehicle body ground. *Is resistance below 5 Ω?*	Go to Step 9.	Go to Step 8.
8	**ECT sensor ground circuit check** 1) Measure resistance between “C01-55” terminal of ECM connector and vehicle body ground. *Is resistance below 5 Ω?*	“GRY/BLU” wire is open circuit or high resistance circuit. Poor “C01-55” connection.	Faulty ECM ground circuit. If circuit is OK, substitute a known-good ECM and recheck.
9	**ECT sensor for performance check** 1) Check ECT sensor according to “Engine Coolant Temperature (ECT) Sensor Inspection in Section 1C”. *Is it in good condition?*	Substitute a known-good ECM and recheck.	Replace ECT sensor.

DTC P0122: Throttle Position Sensor (Main) Circuit Low

S7RW0A1104031

Wiring Diagram

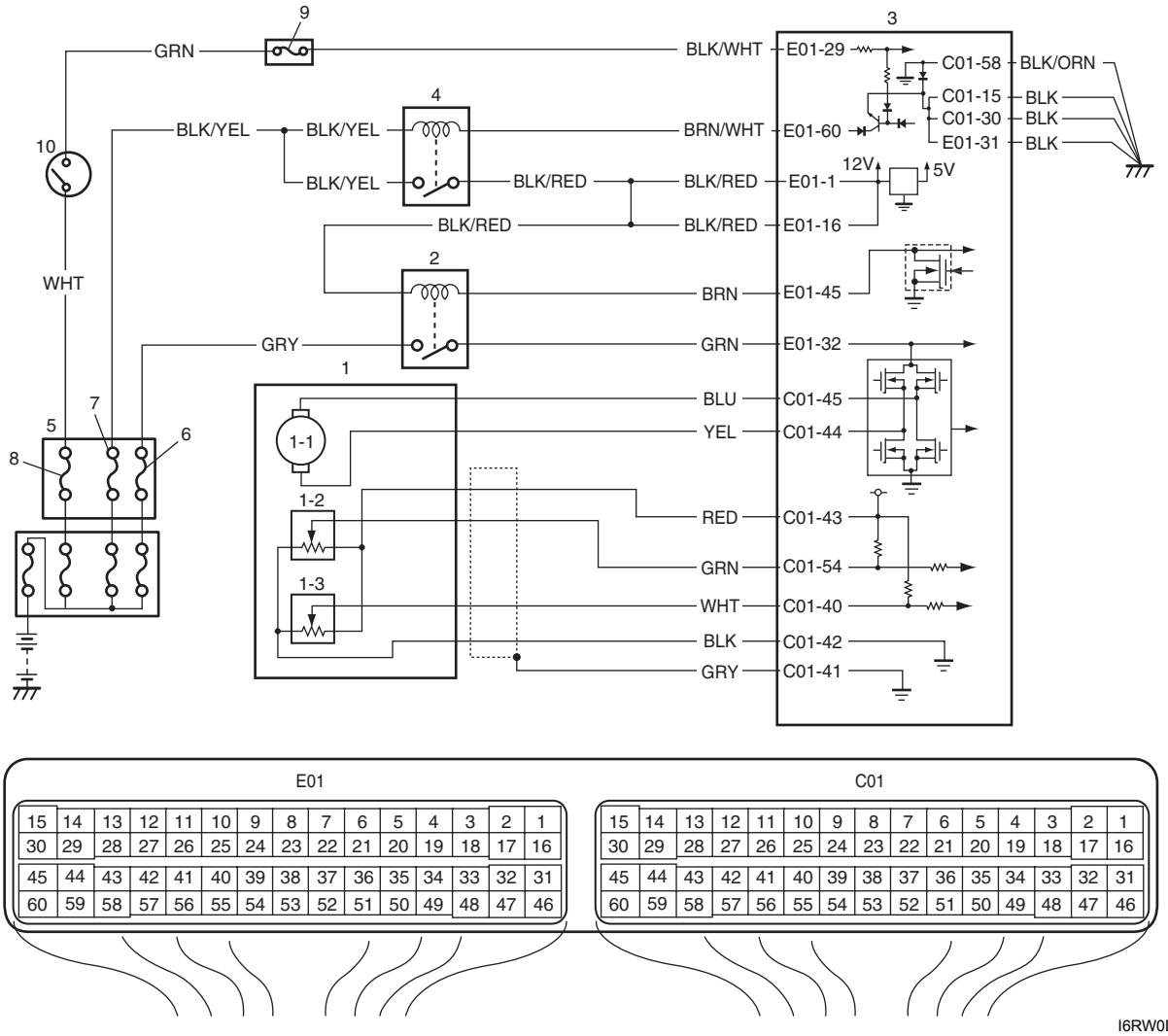

I6RW0D110026-01

1. Electric throttle body assembly	3. ECM	8. “IGN” fuse
1-1. Throttle actuator	4. Main relay	9. “IG COIL” fuse
1-2. Throttle position sensor (main)	5. Individual circuit fuse box No.1	10. Ignition switch
1-3. Throttle position sensor (sub)	6. “THR MOT” fuse	
2. Throttle actuator control relay	7. “FI” fuse	

DTC Detecting Condition and Trouble Area

DTC detecting condition	Trouble area
Output voltage of throttle position sensor (main) is less than specified value for specified time. (1 driving detection logic)	• Throttle position sensor (main) circuit • Electric throttle body assembly • ECM

NOTE

When DTC P0122 and P0222 are indicated together, it is possible that “RED” wire open circuit.

DTC Confirmation Procedure

1) With ignition switch turned OFF, connect scan tool.
2) Turn ON ignition switch and clear DTC using scan tool.
3) Keep the accelerator pedal at idle position for 2 seconds.
4) Keep the accelerator pedal at fully depressed position for 2 seconds.
5) Repeat Step 3) and 4) for 3 times.
6) Check DTC.

DTC Troubleshooting

NOTE

Before this troubleshooting is performed, read the precautions for DTC troubleshooting referring to "Precautions for DTC Troubleshooting".

Step	Action	Yes	No
1	*Was "Engine and Emission Control System Check" performed?*	Go to Step 2.	Go to "Engine and Emission Control System Check".
2	**Throttle position sensor and its circuit check** 1) Connect scan tool to DLC with ignition switch turned OFF. 2) Turn ON ignition switch, check "TP Sensor 1 Volt" displayed on scan tool when accelerator pedal is idle position and fully depressed. *Is displayed TP sensor value as described voltage in "Scan Tool Data"?*	Intermittent trouble. Check for intermittent referring to "Intermittent and Poor Connection Inspection in Section 00".	Go to Step 3.
3	**ECM voltage check** 1) Disconnect connector from electric throttle body assembly with ignition switch turned OFF. 2) Check for proper connection to electric throttle body assembly at "RED", "GRN" and "BLK" wire terminals. 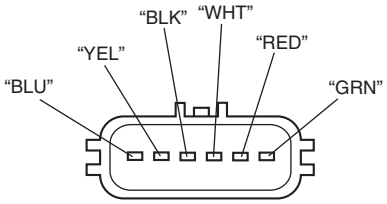 I5RW0C110016-01 3) If OK, measure voltage between "RED" wire terminal of electric throttle body assembly connector and engine ground with ignition switch turned ON. *Is voltage 4 – 6 V?*	Go to Step 6.	Go to Step 4.
4	**ECM voltage check** 1) Turn OFF ignition switch. 2) Remove ECM from its bracket with ECM connectors connected. 3) Check for proper connection of ECM connector at "C01-43" terminal. 4) If OK, measure voltage between "C01-43" terminal of ECM connector and engine ground with ignition switch turned ON. *Is voltage 4 – 6 V?*	"RED" wire is open or high resistance circuit.	Go to Step 5.

Step	Action	Yes	No
5	**Wire harness check** 1) Disconnect connectors from ECM with ignition switch turned OFF. 2) Measure resistance between “C01-43” terminal of ECM connector and engine ground. *Is resistance infinity?*	Substitute a known-good ECM and recheck.	“RED” wire is shorted to ground circuit.
6	**Wire harness check** 1) Measure voltage between “GRN” wire terminal of electric throttle body assembly connector and engine ground with ignition switch turned ON. *Is voltage 4 – 6 V?*	Go to Step 9.	Go to Step 7.
7	**Wire harness check** 1) Disconnect connectors from ECM with ignition switch turned OFF. 2) Check for proper connection of ECM connector at “C01-54” and “C01-42” terminals. 3) If OK, measure resistance between “GRN” and “BLK” wire terminals of electric throttle body assembly connector. *Is resistance infinity?*	Go to Step 8.	“GRN” wire is shorted to “BLK” wire.
8	**Wire harness check** 1) Measure resistance between “GRN” wire terminal of electric throttle body assembly connector and engine ground with ignition switch turned OFF. *Is resistance infinity?*	Substitute a known-good ECM and recheck.	“GRN” wire is shorted to ground circuit.
9	**Electric throttle body assembly check** 1) Check throttle pedal position sensor referring to “Throttle Position Sensor Performance Check” under “Electric Throttle Body Assembly On-Vehicle Inspection in Section 1C”. *Is output voltage within specified value?*	Substitute a known-good ECM and recheck.	Replace electric throttle body assembly.

DTC P0123: Throttle Position Sensor (Main) Circuit High

S7RW0A1104032

Wiring Diagram

Refer to “DTC P0122: Throttle Position Sensor (Main) Circuit Low”.

DTC Detecting Condition and Trouble Area

DTC detecting condition	Trouble area
Output voltage of throttle position sensor (main) is more than specified value for specified time. (1 driving detection logic)	• Throttle position sensor (main) circuit • Electric throttle body assembly • ECM

NOTE

When DTC P0123 and P0223 are indicated together, it is possible that “RED” wire shorted to power circuit and/or “BLK” wire open.

DTC Confirmation Procedure

1) With ignition switch turned OFF, connect scan tool.
2) Turn ON ignition switch and clear DTC using scan tool.
3) Keep the accelerator pedal at idle position for 2 seconds.
4) Keep the accelerator pedal at fully depressed position for 2 seconds.
5) Repeat Step 3) and 4) for 3 times.
6) Check DTC.

DTC Troubleshooting

NOTE

Before this troubleshooting is performed, read the precautions for DTC troubleshooting referring to "Precautions for DTC Troubleshooting".

Step	Action	Yes	No
1	*Was "Engine and Emission Control System Check" performed?*	Go to Step 2.	Go to "Engine and Emission Control System Check".
2	**Throttle position sensor and its circuit check** 1) Connect scan tool to DLC with ignition switch turned OFF. 2) Turn ON ignition switch, check "TP Sensor 1 Volt" displayed on scan tool when accelerator pedal is idle position and fully depressed. *Is displayed TP sensor value as described voltage in "Scan Tool Data"?*	Intermittent trouble. Check for intermittent referring to "Intermittent and Poor Connection Inspection in Section 00".	Go to Step 3.
3	**ECM voltage check** 1) Disconnect connector from electric throttle body assembly with ignition switch turned OFF. 2) Check for proper connection to electric throttle body assembly at "RED", "GRN" and "BLK" wire terminals. 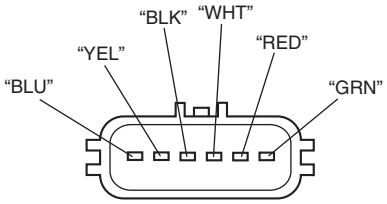 I5RW0C110016-01 3) If OK, measure voltage between "RED" wire terminal of electric throttle body assembly connector and engine ground with ignition switch turned ON. *Is voltage 4 – 6 V?*	Go to Step 5.	Go to Step 4.
4	**Wire harness check** 1) Disconnect connectors from ECM with ignition switch turned OFF. 2) Check for proper connection of ECM connector at "C01-43" terminal. 3) Measure voltage between "C01-43" terminal of ECM connector and engine ground with ignition switch turned ON. *Is voltage 0 V?*	Substitute a known-good ECM and recheck.	"RED" wire is shorted to power circuit.

Step	Action	Yes	No
5	**Wire harness check** 1) Measure voltage between “GRN” wire terminal of electric throttle body assembly connector and engine ground with ignition switch turned ON. *Is voltage 4 – 6 V?*	Go to Step 9.	Go to Step 6.
6	**Wire harness check** 1) Turn OFF ignition switch. 2) Remove ECM from its bracket with ECM connectors connected. 3) Check for proper connection of ECM connector at “C01-43” and “C01-54” terminals. 4) If OK, measure voltage between “C01-54” terminal of ECM connector and engine ground with ignition switch turned ON. *Is voltage 4 – 6 V?*	“GRN” wire is open or high resistance circuit.	Go to Step 7.
7	**Wire harness check** 1) Disconnect connectors from ECM with ignition switch turned OFF. 2) Measure resistance between “GRN” and “RED” wire terminals of electric throttle body assembly connector. *Is resistance infinity?*	Go to Step 8.	“GRN” wire is shorted to “RED” wire.
8	**Wire harness check** 1) Turn ON ignition switch. 2) Measure voltage between “C01-54” terminal of ECM connector and engine ground. *Is voltage 0 V?*	Substitute a known-good ECM and recheck.	“GRN” wire is shorted to power circuit.
9	**Ground circuit check** 1) Turn OFF ignition switch. 2) Measure resistance between “BLK” wire terminal of electric throttle body assembly connector and engine ground. *Is resistance below 5 Ω?*	Go to Step 11.	Go to Step 10.
10	**Ground circuit check** 1) Remove ECM from its bracket with ECM connectors connected. 2) Check for proper connection of ECM connector at “C01-42” terminal. 3) Measure resistance between “C01-42” terminal of ECM connector and engine ground with ignition switch turned OFF. *Is resistance below 5 Ω?*	“BLK” wire is open or high resistance circuit.	Faulty ECM ground circuit. If circuit is OK, substitute a known-good ECM and recheck.
11	**Electric throttle body assembly check** 1) Check throttle pedal position sensor referring to “Throttle Position Sensor Performance Check” under “Electric Throttle Body Assembly On-Vehicle Inspection in Section 1C”. *Is output voltage within specified value?*	Substitute a known-good ECM and recheck.	Replace electric throttle body assembly.

DTC P0131 / P0132: O2 Sensor (HO2S) Circuit Low Voltage / High Voltage (Sensor-1)

S7RW0A1104033

Wiring Diagram

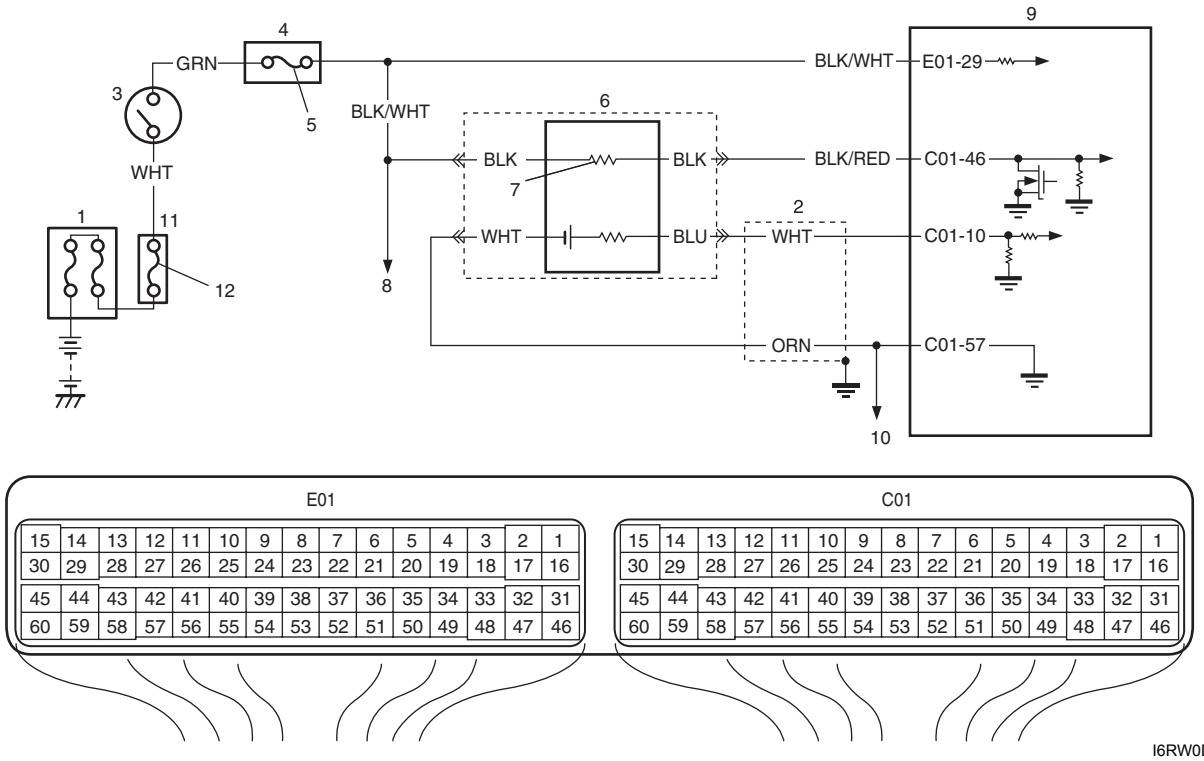

I6RW0D110027-01

1. Main fuse box	4. Junction block assembly	7. Heater	10. To HO2S-2
2. Shield wire	5. “IG COIL” fuse	8. To HO2S-2 heater	11. Individual circuit fuse box No.1
3. Ignition switch	6. HO2S-1	9. ECM	12. “IGN” fuse

DTC Detecting Condition and Trouble Area

DTC detecting condition	Trouble area
DTC P0131: Maximum HO2S voltage is lower than specified voltage. (2 driving cycle detection logic, monitoring once/1 driving) **DTC P0132:** Minimum HO2S voltage is higher than specified voltage. (2 driving cycle detection logic, monitoring once/1 driving)	• HO2S-1 circuit • HO2S-1 • Fuel system • ECM • Fuel shortage • Exhaust system • Air intake system

DTC Confirmation Procedure

⚠ WARNING

- **When performing a road test, select a place where there is no traffic or possibility of a traffic accident and be very careful during testing to avoid occurrence of an accident.**
- **Road test should be carried out by 2 persons, a driver and a tester, on a level road.**

NOTE

Check to make sure that following conditions are satisfied when using this "DTC Confirmation Procedure".

- **Intake air temperature at engine start: –10 °C (14 °F) to 80 °C (176 °F)**
- **Intake air temperature: –10 °C (14 °F) to 70 °C (158 °F)**
- **Engine coolant temperature: 70 °C (158 °F) or more**
- **Altitude (barometric pressure): 2500 m, 8200 ft or less (560 mmHg, 74.4 kPa or more)**

1) With ignition switch turned OFF, connect scan tool.
2) Turn ON ignition switch and clear DTC using scan tool.
3) Start engine and warm up to normal operating temperature.
4) Drive vehicle at 40 mph (60 km/h) or higher. (engine speed: 2500 – 3000 r/min.)
5) Keep above vehicle speed for 6 min. or more. (Throttle valve opening is kept constant in this step.)
6) Release accelerator pedal and with engine brake applied, keep vehicle coasting (with fuel cut for 3 sec. or more) and then stop vehicle.
7) For european market model, check whether O2 sensor readiness/monitoring test has completed or not by using scan tool.
   If O2 sensor readiness/monitoring test has not completed, check vehicle conditions (environmental) and repeat Step 3) through 6).
8) Check DTC and pending DTC.

DTC Troubleshooting

NOTE

Before this troubleshooting is performed, read the precautions for DTC troubleshooting referring to "Precautions for DTC Troubleshooting".

Step	Action	Yes	No
1	*Was "Engine and Emission Control System Check" performed?*	Go to Step 2.	Go to "Engine and Emission Control System Check".
2	*Is there DTC(s) other than HO2S-1?*	Go to applicable DTC diag. flow.	Go to Step 3.
3	**HO2S-1 signal check** 1) Connect scan tool to DLC with ignition switch turned OFF. 2) Warm up engine to normal operating temperature and keep it at 2000 r/min. for 60 sec. 3) Repeat racing engine (Repeat depressing accelerator pedal 5 to 6 times continuously to enrich A/F mixture and take foot off from pedal to enlean it). *Does HO2S-1 output voltage deflect between below 0.3 V and over 0.6 V repeatedly?*	Intermittent trouble. Check for intermittent referring to "Intermittent and Poor Connection Inspection in Section 00". If check result is OK, go to Step 9.	Go to Step 4.

Step	Action	Yes	No
4	**HO2S-1 ground check** 1) Disconnect connector from HO2S-1 with ignition switch turned OFF. 2) Check for proper connection to HO2S-1 connector at “BLK/RED”, “WHT”, “BLK/WHT” and “ORN” wire terminals. 3) If connections are OK, measure resistance between “ORN” wire terminal of HO2S-1 connector and engine ground. *Is measured resistance less than 5 Ω?*	Go to Step 5.	“ORN” wire is open or high resistance circuit. Poor “C01-57” terminal connection. Faulty ECM ground. If they are OK, substitute a known-good ECM and recheck.
5	**Wire circuit check** 1) Turn OFF ignition switch. 2) Remove ECM from its bracket with ECM connectors connected. 3) Measure resistance between “WHT” wire terminal of HO2S-1 connector and “C01-10” terminal of ECM connector. *Is resistance less than 5 Ω?*	Go to Step 6.	“WHT” wire is high resistance circuit or open circuit. Poor “C01-10” terminal connection. Faulty ECM ground. If they are OK, substitute a known-good ECM and recheck.
6	**Wire circuit check** 1) Disconnect connectors from ECM with ignition switch turn OFF. 2) Measure resistance between “WHT” wire terminal of HO2S-1 connector and vehicle body ground. *Is resistance infinity?*	Go to Step 7.	“WHT” wire is shorted to ground circuit.
7	**HO2S-1 signal circuit check** 1) Measure voltage between “WHT” wire terminal of HO2S-1 connector and vehicle body ground. *Is voltage 0 V?*	Go to Step 8.	“WHT” wire is shorted to other circuit.
8	**HO2S-1 heater circuit check** 1) Check HO2S-1 heater circuit referring to “DTC P0031 / P0032: HO2S Heater Control Circuit Low / High (Sensor-1)”. *Is circuit in good condition?*	Go to Step 9.	Repair HO2S-1 circuit.
9	**Exhaust system check** 1) Check exhaust system for exhaust gas leakage. *Is it OK?*	Go to Step 4 in “DTC P0171 / P0172: Fuel System Too Lean / Rich”. If it is in good condition, go to Step 10.	Repair leakage of exhaust system.
10	**Air intake system check** 1) Check air intake system for clog or leak. *Is it OK?*	Replace HO2S-1 referring to “Heated Oxygen Sensor (HO2S-1 and HO2S-2) Removal and Installation (If Equipped) in Section 1C”. If DTC still exists, substitute a known-good ECM and recheck.	Repair or replace air intake system.

DTC P0133: O2 Sensor (HO2S) Circuit Slow Response (Sensor-1)

S7RW0A1104034

Wiring Diagram

Refer to “DTC P0131 / P0132: O2 Sensor (HO2S) Circuit Low Voltage / High Voltage (Sensor-1)”.

DTC Detecting Condition and Trouble Area

DTC detecting condition	Trouble area
Response time (time to change from lean to rich or from rich to lean) of HO2S-1 output voltage is about 1 sec. at minimum or average time of 1 cycle is 5 sec. at minimum. (2 driving cycle detection logic, monitoring once / 1 driving)	Heated oxygen sensor-1

DTC Confirmation Procedure

⚠ WARNING

- **When performing a road test, select a place where there is no traffic or possibility of a traffic accident and be very careful during testing to avoid occurrence of an accident.**
- **Road test should be carried out by 2 persons, a driver and a tester, on a level road.**

NOTE

Check to make sure that following conditions are satisfied when using this “DTC Confirmation Procedure”.

- **Intake air temperature at engine start: –10 °C (14 °F) to 80 °C (176 °F)**
- **Intake air temperature: –10 °C (14 °F) to 70 °C (158 °F)**
- **Engine coolant temperature: 70 °C (158 °F) or more**
- **Altitude (barometric pressure): 2500 m, 8200 ft or less (560 mmHg, 74.4 kPa or more)**

1) With ignition switch turned OFF, connect scan tool.
2) Turn ON ignition switch and clear DTC using scan tool.
3) Start engine and warm up to normal operating temperature.
4) Drive vehicle at 40 mph (60 km/h) or higher. (engine speed: 2500 – 3000 r/min.)
5) Keep above vehicle speed for 6 min. or more. (Throttle valve opening is kept constant in this step.)
6) Release accelerator pedal and with engine brake applied, keep vehicle coasting (with fuel cut for 3 sec. or more) and then stop vehicle.
7) For european market model, check whether O2 sensor readiness/monitoring test has completed or not by using scan tool.
   If O2 sensor readiness/monitoring test has not completed, check vehicle conditions (environmental) and repeat Step 3) through 6).
8) Check DTC and pending DTC.

DTC Troubleshooting

NOTE

Before this troubleshooting is performed, read the precautions for DTC troubleshooting referring to “Precautions for DTC Troubleshooting”.

Step	Action	Yes	No
1	*Was “Engine and Emission Control System Check” performed?*	Go to Step 2.	Go to “Engine and Emission Control System Check”.
2	*Is there DTC(s) other than HO2S-1 (DTC P0133)?*	Go to applicable DTC diag. flow.	Replace HO2S-1.

DTC P0134: O2 Sensor (HO2S) Circuit No Activity Detected (Sensor-1)

S7RW0A1104035

Wiring Diagram

Refer to “DTC P0131 / P0132: O2 Sensor (HO2S) Circuit Low Voltage / High Voltage (Sensor-1)”.

DTC Detecting Condition and Trouble Area

DTC detecting condition	Trouble area
HO2S voltage is higher than specified value for 1 min. after warming up engine or HO2S voltage is lower than specified value for 1 min. after warming up engine. (2 driving cycle detection logic)	• HO2S-1 • HO2S-1 circuit • Exhaust gas leakage • ECM • Air intake system

DTC Confirmation Procedure

⚠ WARNING

- **When performing a road test, select a place where there is no traffic or possibility of a traffic accident and be very careful during testing to avoid occurrence of an accident.**
- **Road test should be carried out by 2 persons, a driver and a tester, on a level road.**

NOTE

Check to make sure that following conditions are satisfied when using this “DTC Confirmation Procedure”.

- **Intake air temperature at engine start: –10 °C (14 °F) to 80 °C (176 °F)**
- **Intake air temperature: –10 °C (14 °F) to 70 °C (158 °F)**
- **Engine Coolant temperature: 70 °C (158 °F) or more**
- **Altitude (barometric pressure): 2500 m, 8200 ft or less (560 mmHg, 74.4 kPa or more)**

1) With ignition switch turned OFF, connect scan tool.
2) Turn ON ignition switch and clear DTC using scan tool.
3) Start engine and warm up to normal operating temperature.
4) Drive vehicle at 40 mph (60 km/h) or higher. (engine speed: 2500 – 3000 r/min.)
5) Keep above vehicle speed for 6 min. or more. (Throttle valve opening is kept constant in this step.)
6) Release accelerator pedal and with engine brake applied, keep vehicle coasting (with fuel cut for 3 sec. or more) and then stop vehicle.
7) Check DTC and pending DTC.

DTC Troubleshooting

NOTE

Before this troubleshooting is performed, read the precautions for DTC troubleshooting referring to “Precautions for DTC Troubleshooting”.

Step	Action	Yes	No
1	*Was "Engine and Emission Control System Check" performed?*	Go to Step 2.	Go to "Engine and Emission Control System Check".
2	**HO2S-1 output voltage check** 1) Connect scan tool to DLC with ignition switch turned OFF. 2) Warm up engine to normal operating temperature and keep it at 2000 r/min. for 60 sec. 3) Repeat racing engine (Repeat depressing accelerator pedal 5 to 6 times continuously to enrich A/F mixture and take foot off from pedal to enlean it) and check HO2S output voltages displayed on scan tool. *Is over 0.6 V and below 0.3 V indicated?*	Intermittent trouble. Check for intermittent referring to "Intermittent and Poor Connection Inspection in Section 00". If check result is OK, go to Step 3.	Go to Step 3.
3	**HO2S-1 ground check** 1) Disconnect connector from HO2S-1 with ignition switch turned OFF. 2) Check for proper connection to HO2S-1 at "BLK/RED", "WHT", "BLK/WHT" and "ORN" wire terminals. 3) If wire and connection are OK, measure resistance between "ORN" wire terminal of HO2S-1 connector and engine ground. *Is resistance less than 5 Ω?*	Go to Step 4.	"ORN" wire is open or high resistance circuit. Poor "C01-57" terminal connection. Faulty ECM ground. If they are OK, substitute a known-good ECM and recheck.
4	**Wire circuit check** 1) Turn OFF ignition switch. 2) Remove ECM from its bracket with ECM connectors connected. 3) Measure resistance between "WHT" wire terminal of HO2S-1 connector and "C01-10" terminal of ECM connector. *Is resistance less than 5 Ω?*	Go to Step 5.	"WHT" wire is high resistance circuit or open circuit. Poor "C01-10" terminal connection of ECM connector. Faulty ECM ground. If they are OK, substitute a known-good ECM and recheck.
5	**Wire circuit check** 1) Disconnect connectors from ECM with ignition switch turned OFF. 2) Measure resistance between "WHT" wire terminal of HO2S-1 connector and vehicle body ground. *Is resistance infinity?*	Go to Step 6.	"WHT" wire is shorted to ground circuit.
6	**HO2S-1 heater circuit check** 1) Check HO2S-1 heater circuit referring to "DTC P0031 / P0032: HO2S Heater Control Circuit Low / High (Sensor-1)". *Is it in good condition?*	Go to Step 7.	Repair HO2S-1 circuit.
7	**Exhaust system check** 1) Check exhaust system for exhaust gas leakage. *Is it OK?*	Go to Step 4 in "DTC P0171 / P0172: Fuel System Too Lean / Rich". If it is in good condition, go to Step 8.	Repair leakage of exhaust system.

Step	Action	Yes	No
8	**Air intake system check** 1) Check air intake system for clog or leak. *Is it OK?*	Replace HO2S-1 referring to “Heated Oxygen Sensor (HO2S-1 and HO2S-2) Removal and Installation (If Equipped) in Section 1C”. If DTC still exists, substitute a known-good ECM and recheck.	Repair or replace air intake system.

DTC P0137 / P0138: O2 Sensor (HO2S) Circuit Low Voltage / High Voltage (Sensor-2)

S7RW0A1104036

Wiring Diagram

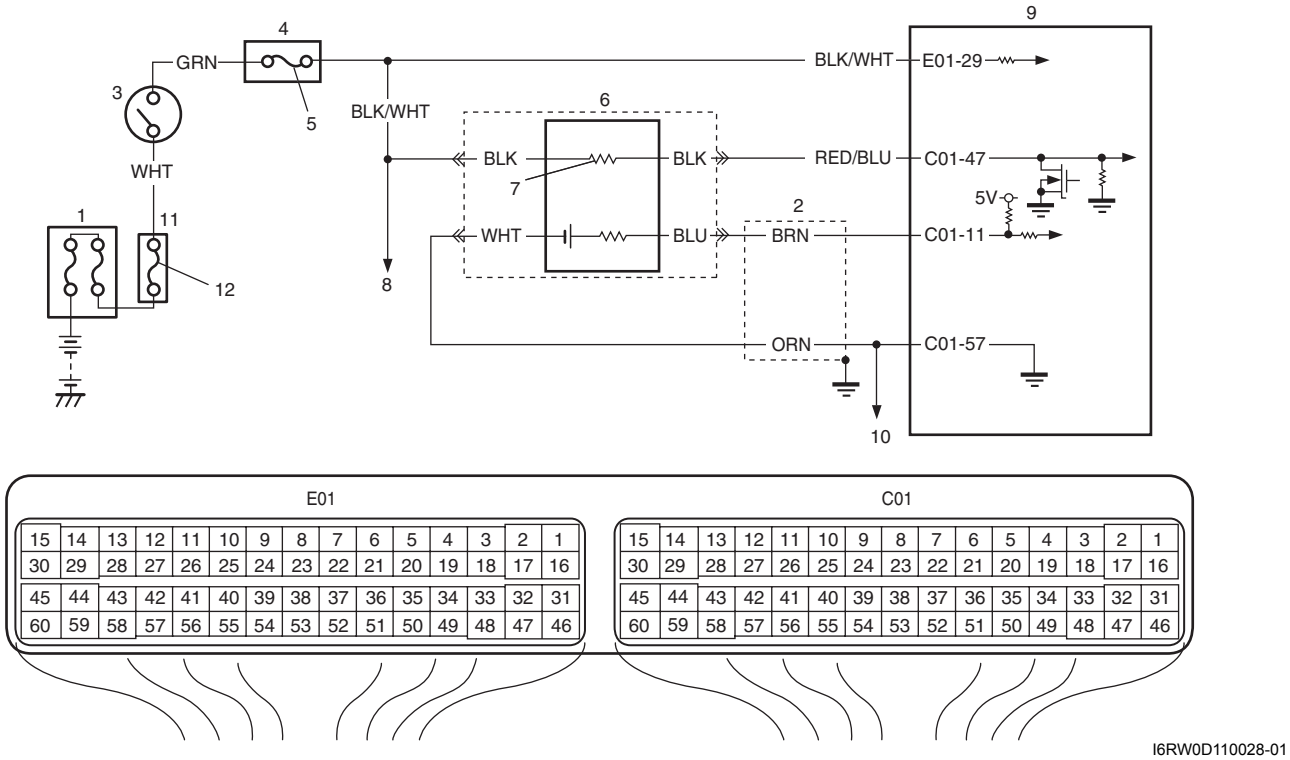

I6RW0D110028-01

1. Main fuse box	4. Junction block assembly	7. Heater	10. To HO2S-1
2. Shield wire	5. “IG COIL” fuse	8. To HO2S-1 heater	11. Individual circuit fuse box No.1
3. Ignition switch	6. HO2S-2	9. ECM	12. “IG ACC” fuse

DTC Detecting Condition and Trouble Area

DTC detecting condition	Trouble area
DTC P0137: HO2S-2 voltage is lower than specified value while engine is idling after driving with high engine load (high speed) for specified time. And HO2S-2 max. voltage minus HO2S-2 min. voltage is less than specified value for 40 sec. (2 driving cycle detection logic) **DTC P0138:** HO2S-2 voltage is higher than specified value while engine is idling after driving with high engine load (high speed) for specified time. And HO2S-2 max. voltage minus HO2S-2 min. voltage is less than specified value for 40 sec. (2 driving cycle detection logic)	• HO2S-2 • HO2S-2 circuit • Fuel system • ECM • Fuel shortage • Exhaust system • Air intake system

DTC Confirmation Procedure

⚠ WARNING

- **When performing a road test, select a place where there is no traffic or possibility of a traffic accident and be very careful during testing to avoid occurrence of an accident.**
- **Road test should be carried out by 2 persons, a driver and a tester, on a level road.**

NOTE

Check to make sure that following conditions are satisfied when using this "DTC Confirmation Procedure".

- **Intake air temperature at engine start: –10 °C (14 °F) to 80 °C (176 °F)**
- **Intake air temperature: –10 °C (14 °F) to 70 °C (158 °F)**
- **Engine Coolant temperature: 70 °C (158 °F) or more**
- **Altitude (barometric pressure): 2500 m, 8200 ft or less (560 mmHg, 74.4 kPa or more)**

1) With ignition switch turned OFF, connect scan tool.
2) Turn ON ignition switch and clear DTC using scan tool.
3) Start engine and warm up to normal operating temperature.
4) Increase vehicle speed to 60 – 80 km/h (37 – 50 mile/h) at 5th gear or D range.
5) Release accelerator pedal and with engine brake applied, keep vehicle coasting (with fuel cut for 4 sec. or more), then stop vehicle and run engine at idle speed for 60 sec. or more.
6) Repeat Step 4).
7) Keep above vehicle speed for 8 min. or more. (Throttle valve opening is kept constant in this step.)
8) Repeat Step 5).
9) Check DTC and pending DTC.

DTC Troubleshooting

NOTE

Before this troubleshooting is performed, read the precautions for DTC troubleshooting referring to "Precautions for DTC Troubleshooting".

Step	Action	Yes	No
1	*Was "Engine and Emission Control System Check" performed?*	Go to Step 2.	Go to "Engine and Emission Control System Check".
2	*Is there DTC(s) other than fuel system (DTC P0171 / P0172) and HO2S-2 (DTC P0140)?*	Go to applicable DTC diag. flow.	Go to Step 3.
3	**HO2S-2 and its circuit check** 1) Connect scan tool to DLC with ignition switch turned OFF. 2) Warm up engine to normal operating temperature and keep it at 2000 r/min. for 60 sec. 3) Repeat racing engine (Repeat depressing accelerator pedal 5 to 6 times continuously to enrich A/F mixture and take foot off from pedal to enlean it). *Does HO2S-2 output voltage indicate deflection between over 0.35 V and below 0.25 V?*	Go to "DTC P0171 / P0172: Fuel System Too Lean / Rich".	Go to Step 4.

Step	Action	Yes	No
4	**HO2S-2 ground check** 1) Disconnect connector from HO2S-2 with ignition switch turned OFF. 2) Check for proper connection to HO2S-2 connector at “RED/BLU”, “BRN”, “ORN” and “BLK/WHT” wire terminals. 3) If connections are OK, measure resistance between “ORN” wire terminal of HO2S-2 connector and engine ground. *Is resistance less than 5 Ω?*	Go to Step 5.	“ORN” wire is open or high resistance circuit. Poor “C01-57” terminal connection. Faulty ECM ground. If they are OK, substitute a known-good ECM and recheck.
5	**Wire circuit check** 1) Turn OFF ignition switch. 2) Remove ECM from its bracket with ECM connectors connected. 3) Measure resistance between “BRN” wire terminal of HO2S-2 connector and “C01-11” terminal of ECM connector. *Is resistance less than 5 Ω?*	Go to Step 6.	“BRN” wire is high resistance circuit or open circuit. Poor “C01-11” terminal connection. If they are OK, substitute a known-good ECM and recheck.
6	**Wire circuit check** 1) Disconnect connectors from ECM with ignition switch turned OFF. 2) Measure resistance between “BRN” wire terminal of HO2S-2 connector and vehicle body ground. *Is resistance infinity?*	Go to Step 7.	“BRN” wire is shorted to ground circuit.
7	**HO2S-2 signal circuit check** 1) Measure voltage between “BRN” wire terminal of HO2S-2 connector and vehicle body ground. *Is voltage 0 V?*	Go to Step 8.	“BRN” wire is shorted to other circuit.
8	**HO2S-2 heater circuit check** 1) Check HO2S-2 heater circuit referring to “DTC P0037 / P0038: HO2S Heater Control Circuit Low / High (Sensor-2)”. *Is circuit in good condition?*	Go to Step 9.	Repair HO2S-2 circuit.
9	**Exhaust system check** 1) Check exhaust system for exhaust gas leakage. *Is it OK?*	Go to Step 4 in “DTC P0171 / P0172: Fuel System Too Lean / Rich”. If it is in good condition, go to Step 10.	Repair leakage of exhaust system.
10	**Air intake system check** 1) Check air intake system for clog or leak. *Is it OK?*	Replace HO2S-2 referring to “Heated Oxygen Sensor (HO2S-1 and HO2S-2) Removal and Installation (If Equipped) in Section 1C”. Is DTC still exists, substitute a known-good ECM and recheck.	Repair or replace air intake system.

DTC P0140: O2 Sensor (HO2S) Circuit No Activity Detected (Sensor-2)

S7RW0A1104037

Wiring Diagram

Refer to “DTC P0137 / P0138: O2 Sensor (HO2S) Circuit Low Voltage / High Voltage (Sensor-2)”.

DTC Detecting Condition and Trouble Area

DTC detecting condition	Trouble area
HO2S-2 voltage is higher than specified value after warming up engine (circuit open). (2 driving cycle detection logic)	• HO2S-2 • HO2S-2 circuit • ECM • Exhaust gas leakage • Air intake system

DTC Confirmation Procedure

⚠ WARNING

- **When performing a road test, select a place where there is no traffic or possibility of a traffic accident and be very careful during testing to avoid occurrence of an accident.**
- **Road test should be carried out by 2 persons, a driver and a tester, on a level road.**

1) With ignition switch turned OFF, connect scan tool.
2) Turn ON ignition switch and clear DTC using scan tool.
3) Start engine and warm up to normal operating temperature.
4) Increase vehicle speed to 60 – 80 km/h (37 – 50 mile/h) at 5th gear or D range.
5) Release accelerator pedal and with engine brake applied, keep vehicle coasting (with fuel cut for 4 sec. or more), then stop vehicle and run engine at idle speed for 60 sec. or more.
6) Check DTC and pending DTC.

DTC Troubleshooting

NOTE

Before this troubleshooting is performed, read the precautions for DTC troubleshooting referring to “Precautions for DTC Troubleshooting”.

Step	Action	Yes	No
1	*Was “Engine and Emission Control System Check” performed?*	Go to Step 2.	Go to “Engine and Emission Control System Check”.
2	**HO2S-2 ground check** 1) Disconnect connector from HO2S-2 with ignition switch turned OFF. 2) Check for proper connection to HO2S-2 connector at “RED/BLU”, “BRN”, “ORN” and “BLK/WHT” wire terminals. 3) If connections are OK, measure resistance between “ORN” wire terminal of HO2S-2 connector and engine ground. *Is resistance less than 5 Ω?*	Go to Step 3.	“ORN” wire is open or high resistance circuit. Poor “C01-57” terminal connection. Faulty ECM ground. If they are OK, substitute a known-good ECM and recheck.

Step	Action	Yes	No
3	**Wire circuit check** 1) Turn OFF ignition switch. 2) Remove ECM from its bracket with ECM connectors connected. 3) Measure resistance between “BRN” wire terminal of HO2S-2 connector and “C01-11” terminal of ECM connector. *Is resistance less than 5 Ω?*	Go to Step 4.	“BRN” wire is high resistance circuit or open circuit. Poor “C01-11” terminal connection. If they are OK, substitute a known-good ECM and recheck.
4	**HO2S-2 signal circuit check** 1) Disconnect connectors from ECM with ignition switch turned OFF. 2) Measure voltage between “BRN” wire terminal of HO2S-2 connector and vehicle body ground. *Is voltage 0 V?*	Go to Step 5.	“BRN” wire is shorted to other circuit.
5	**HO2S-2 heater circuit check** 1) Check HO2S-2 heater circuit referring to “DTC P0037 / P0038: HO2S Heater Control Circuit Low / High (Sensor-2)”. *Is circuit in good condition?*	Go to Step 6.	Repair HO2S-2 circuit. If circuit is OK, substitute a known-good ECM and recheck.
6	**Exhaust system check** 1) Check exhaust system for exhaust gas leakage. *Is it OK?*	Go to Step 4 in “DTC P0171 / P0172: Fuel System Too Lean / Rich”. If it is in good condition, go to Step 8.	Repair leakage of exhaust system.
7	**Air intake system check** 1) Check air intake system for clog or leak. *Is it OK?*	Replace HO2S-2 referring to “Heated Oxygen Sensor (HO2S-1 and HO2S-2) Removal and Installation (If Equipped) in Section 1C”. If DTC still exists, substitute a known-good ECM and recheck.	Repair or replace air intake system.

DTC P0171 / P0172: Fuel System Too Lean / Rich

S7RW0A1104038

DTC Detecting Condition and Trouble Area

DTC detecting condition	Trouble area
DTC P0171: Total fuel trim is higher than specified value or short term fuel trim is higher than specified value for more than 1 min. (2 driving cycle detection logic) **DTC P0172:** Total fuel trim is lower than specified value or short term fuel trim is lower than specified value for more than 1 min. (2 driving cycle detection logic)	• Vacuum leakage • Exhaust gas leakage • Fuel pressure out of specification • Fuel injector malfunction • Heated oxygen sensor-1 malfunction • MAF sensor malfunction • ECT sensor malfunction

DTC Confirmation Procedure

⚠ WARNING

- **When performing a road test, select a place where there is no traffic or possibility of a traffic accident and be very careful during testing to avoid occurrence of an accident.**
- **Road test should be carried out by 2 persons, a driver and a tester, on a level road.**

NOTE

Check to make sure that following conditions are satisfied when using this "DTC Confirmation Procedure".

- **Intake air temperature at engine start: –10 °C (14 °F) to 80 °C (176 °F)**
- **Intake air temperature: –10 °C (14 °F) to 70 °C (158 °F)**
- **Engine coolant temperature: 70 °C (158 °F) or more**
- **Altitude (barometric pressure): 2500 m, 8200 ft or less (560 mmHg, 74.4 kPa or more)**

1) With ignition switch turned OFF, connect scan tool.
2) Turn ON ignition switch and print Freeze Frame Data or write them down using scan tool.
3) Clear DTC using scan tool.
4) Start engine and warm up to normal operating temperature.
5) Operate vehicle with condition as noted freeze frame data for 5 min.
6) Stop vehicle and check DTC and pending DTC.

DTC Troubleshooting

NOTE

Before this troubleshooting is performed, read the precautions for DTC troubleshooting referring to "Precautions for DTC Troubleshooting".

Step	Action	Yes	No
1	*Was "Engine and Emission Control System Check" performed?*	Go to Step 2.	Go to "Engine and Emission Control System Check".
2	*Is there DTC(s) other than fuel system (DTC P0171 / P0172)?*	Go to applicable DTC diag. flow.	Go to Step 3.
3	**Intake system and exhaust system for leakage check** *Are intake system and exhaust system in good condition?*	Go to Step 4.	Repair or replace defective part.
4	**Fuel pressure check** 1) Check fuel pressure referring to "Fuel Pressure Check". *Is check result satisfactory?*	Go to Step 5.	Repair or replace defective part.
5	**Fuel injectors and its circuit check** 1) Check fuel injectors referring to "Fuel Injector Inspection in Section 1G". *Is check result satisfactory?*	Go to Step 6.	Faulty injector(s) or its circuit.
6	**Visual inspection** 1) Check MAF sensor and air intake system. • Objects which block measuring duct and resistor of MAF sensor. • Other air flow which does not pass MAF sensor. *Are they in good condition?*	Go to Step 7.	Repair or replace defective part.
7	**MAF sensor for performance check** 1) With ignition switch turned OFF, install scan tool. 2) Start engine and warm up to normal operating temperature. 3) Check MAF value using scan tool (Refer to "Scan Tool Data" for normal value.). *Is each value within specified range?*	Go to Step 8.	Go to "DTC P0101: Mass Air Flow Circuit Range / Performance".
8	**ECT sensor for performance check** 1) Check ECT sensor referring to Step 3 and 4 of "DTC P0118: Engine Coolant Temperature Circuit High". *Is check result satisfactory?*	Go to Step 9.	Faulty ECT sensor or its circuit.
9	**HO2S-1 for performance check** 1) Check HO2S-1 referring to Step 3 of "DTC P0131 / P0132: O2 Sensor (HO2S) Circuit Low Voltage / High Voltage (Sensor-1)". *Is check result satisfactory?*	Substitute a known-good ECM and recheck.	Faulty HO2S-1 or its circuit.

DTC P0222: Throttle Position Sensor (Sub) Circuit Low

S7RW0A1104039

Wiring Diagram

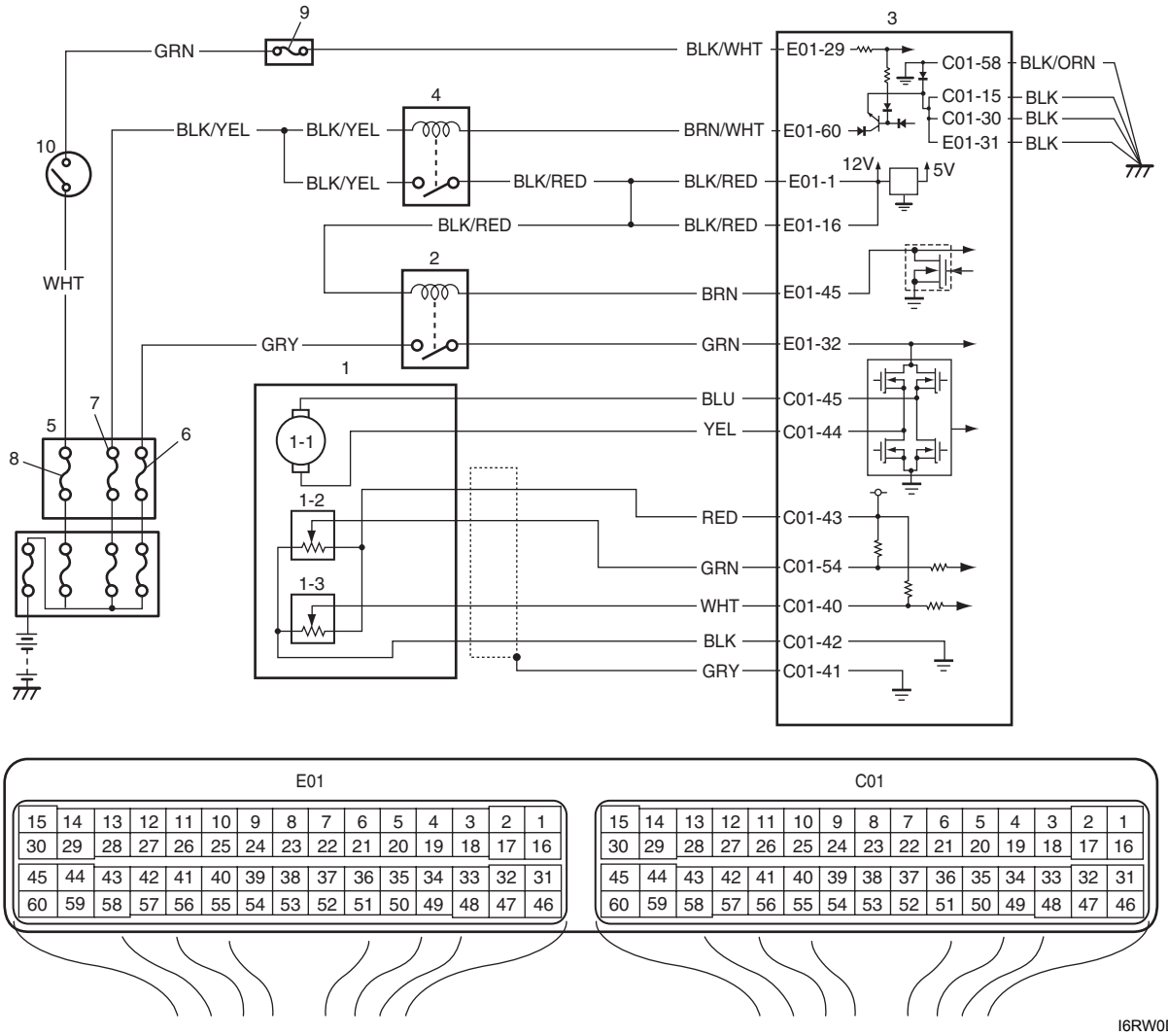

I6RW0D110029-01

1. Electric throttle body assembly	3. ECM	8. “IGN” fuse
1-1. Throttle actuator	4. Main relay	9. “IG COIL” fuse
1-2. Throttle position sensor (main)	5. Individual circuit fuse box No.1	10. Ignition switch
1-3. Throttle position sensor (sub)	6. “THR MOT” fuse	
2. Throttle actuator control relay	7. “FI” fuse	

DTC Detecting Condition and Trouble Area

DTC detecting condition	Trouble area
Output voltage of throttle position sensor (sub) is less than specified value for specified time. (1 driving detection logic)	• Throttle position sensor (sub) circuit • Electric throttle body assembly • ECM

NOTE

When DTC P0122 and P0222 are indicated together, it is possible that “RED” wire open circuit.

DTC Confirmation Procedure

1) With ignition switch turned OFF, connect scan tool.
2) Turn ON ignition switch and clear DTC using scan tool.
3) Keep the accelerator pedal at idle position for 2 seconds.
4) Keep the accelerator pedal at fully depressed position for 2 seconds.
5) Repeat Step 3) and 4) for 3 times.
6) Check DTC.

DTC Troubleshooting

NOTE

Before this troubleshooting is performed, read the precautions for DTC troubleshooting referring to "Precautions for DTC Troubleshooting".

Step	Action	Yes	No
1	*Was "Engine and Emission Control System Check" performed?*	Go to Step 2.	Go to "Engine and Emission Control System Check".
2	**Throttle position sensor and its circuit check** 1) Connect scan tool to DLC with ignition switch turned OFF. 2) Turn ON ignition switch, check "TP Sensor 2 Volt" displayed on scan tool when accelerator pedal is idle position and fully depressed. *Is each TP sensor voltage within specified value in the table "Scan Tool Data"?*	Intermittent trouble. Check for intermittent referring to "Intermittent and Poor Connection Inspection in Section 00".	Go to Step 3.
3	**ECM voltage check** 1) Disconnect connector from electric throttle body assembly with ignition switch turned OFF. 2) Check for proper connection to electric throttle body assembly at "RED", "WHT" and "BLK" wire terminals. 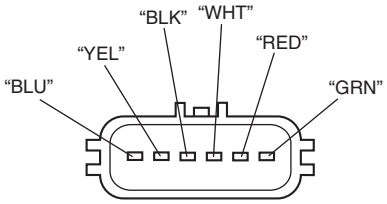 I5RW0C110016-01 3) If OK, measure voltage between "RED" wire terminal of electric throttle body assembly connector and engine ground with ignition switch turned ON. *Is voltage 4 – 6 V?*	Go to Step 6.	Go to Step 4.
4	**ECM voltage check** 1) Turn OFF ignition switch. 2) Remove ECM from its bracket with ECM connectors connected. 3) Check for proper connection of ECM connector at "C01-43" terminal. 4) If OK, measure voltage between "C01-43" terminal of ECM connector and engine ground with ignition switch turned ON. *Is voltage 4 – 6 V?*	"RED" wire is open or high resistance circuit.	Go to Step 5.

Step	Action	Yes	No
5	**Wire harness check** 1) Disconnect connectors from ECM with ignition switch turned OFF. 2) Measure resistance between “C01-43” terminal of ECM connector and engine ground. *Is resistance infinity?*	Substitute a known-good ECM and recheck.	“RED” wire is shorted to ground circuit.
6	**Wire harness check** 1) Measure voltage between “WHT” wire terminal of electric throttle body assembly connector and engine ground with ignition switch turned ON. *Is voltage 4 – 6 V?*	Go to Step 9.	Go to Step 7.
7	**Wire harness check** 1) Disconnect connectors from ECM with ignition switch turned OFF. 2) Check for proper connection of ECM connector at “C01-40” and “C01-42” terminals. 3) If OK, measure resistance between “WHT” and “BLK” wire terminals of electric throttle body assembly connector. *Is resistance infinity?*	Go to Step 8.	“WHT” wire is shorted to “BLK” wire.
8	**Wire harness check** 1) Measure resistance between “WHT” wire terminal of electric throttle body assembly connector and engine ground with ignition switch turned OFF. *Is resistance infinity?*	Substitute a known-good ECM and recheck.	“WHT” wire is shorted to ground circuit.
9	**Electric throttle body assembly check** 1) Check throttle pedal position sensor referring to “Throttle Position Sensor Performance Check” under “Electric Throttle Body Assembly On-Vehicle Inspection in Section 1C”. *Is output voltage within specified value?*	Substitute a known-good ECM and recheck.	Replace electric throttle body assembly.

DTC P0223: Throttle Position Sensor (Sub) Circuit High

S7RW0A1104040

Wiring Diagram

Refer to “DTC P0222: Throttle Position Sensor (Sub) Circuit Low”.

DTC Detecting Condition and Trouble Area

DTC detecting condition	Trouble area
Output voltage of throttle position sensor (sub) is more than specified value for specified time. (1 driving detection logic)	• Throttle position sensor (sub) circuit • Electric throttle body assembly • ECM

NOTE

When DTC P0123 and P0223 are indicated together, it is possible that “RED” wire shorted to power circuit and/or “BLK” wire open.

DTC Confirmation Procedure

1) With ignition switch turned OFF, connect scan tool.
2) Turn ON ignition switch and clear DTC using scan tool.
3) Keep the accelerator pedal at idle position for 2 seconds.
4) Keep the accelerator pedal at fully depressed position for 2 seconds.
5) Repeat Step 3) and 4) for 3 times.
6) Check DTC.

DTC Troubleshooting

NOTE

Before this troubleshooting is performed, read the precautions for DTC troubleshooting referring to "Precautions for DTC Troubleshooting".

Step	Action	Yes	No
1	*Was "Engine and Emission Control System Check" performed?*	Go to Step 2.	Go to "Engine and Emission Control System Check".
2	**Throttle position sensor and its circuit check** 1) Connect scan tool to DLC with ignition switch turned OFF. 2) Turn ON ignition switch, check "TP Sensor 2 Volt" displayed on scan tool when accelerator pedal is idle position and fully depressed. *Is each TP sensor voltage within specified value in the table "Scan Tool Data"?*	Intermittent trouble. Check for intermittent referring to "Intermittent and Poor Connection Inspection in Section 00".	Go to Step 3.
3	**ECM voltage check** 1) Disconnect connector from electric throttle body assembly with ignition switch turned OFF. 2) Check for proper connection to electric throttle body assembly at "RED", "WHT" and "BLK" wire terminals. 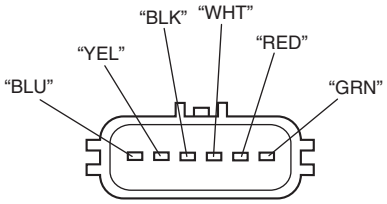 I5RW0C110016-01 3) If OK, measure voltage between "RED" wire terminal of electric throttle body assembly connector and engine ground with ignition switch turned ON. *Is voltage 4 – 6 V?*	Go to Step 5.	Go to Step 4.
4	**Wire harness check** 1) Disconnect connectors from ECM with ignition switch turned OFF. 2) Check for proper connection of ECM connector at "C01-43" terminal. 3) Measure voltage between "C01-43" terminal of ECM connector and engine ground with ignition switch turned ON. *Is voltage 0 V?*	Substitute a known-good ECM and recheck.	"RED" wire is shorted to power circuit.

Step	Action	Yes	No
5	**Wire harness check** 1) Measure voltage between “WHT” wire terminal of electric throttle body assembly connector and engine ground with ignition switch turned ON. *Is voltage 4 – 6 V?*	Go to Step 9.	Go to Step 6.
6	**Wire harness check** 1) Turn OFF ignition switch. 2) Remove ECM from its bracket with ECM connectors connected. 3) Check for proper connection of ECM connector at “C01-43” and “C01-40” terminals. 4) If OK, measure voltage between “C01-40” terminal of ECM connector and engine ground with ignition switch turned ON. *Is voltage 4 – 6 V?*	“WHT” wire is open or high resistance circuit.	Go to Step 7.
7	**Wire harness check** 1) Disconnect connectors from ECM with ignition switch turned OFF. 2) Measure resistance between “WHT” and “RED” wire terminals of electric throttle body assembly connector. *Is resistance infinity?*	Go to Step 8.	“WHT” wire is shorted to “RED” wire.
8	**Wire harness check** 1) Turn ON ignition switch. 2) Measure voltage between “C01-40” terminal of ECM connector and engine ground. *Is voltage 0 V?*	Substitute a known-good ECM and recheck.	“WHT” wire is shorted to power circuit.
9	**Ground circuit check** 1) Turn OFF ignition switch. 2) Measure resistance between “BLK” wire terminal of electric throttle body assembly connector and engine ground. *Is resistance below 5 Ω?*	Go to Step 11.	Go to Step 10.
10	**Ground circuit check** 1) Remove ECM from its bracket with ECM connectors connected. 2) Check for proper connection of ECM connector at “C01-42” terminal. 3) Measure resistance between “C01-42” terminal of ECM connector and engine ground with ignition switch turned OFF. *Is resistance below 5 Ω?*	“BLK” wire is open or high resistance circuit.	Faulty ECM ground circuit. If circuit is OK, substitute a known-good ECM and recheck.
11	**Electric throttle body assembly check** 1) Check throttle position sensor referring to “Throttle Position Sensor Performance Check” under “Electric Throttle Body Assembly On-Vehicle Inspection in Section 1C”. *Is output voltage within specified value?*	Substitute a known-good ECM and recheck.	Replace electric throttle body assembly.

DTC P0300 / P0301 / P0302 / P0303 / P0304: Random Misfire Detected / Cylinder 1 / Cylinder 2 / Cylinder 3 / Cylinder 4 Misfire Detected

S7RW0A1104041

System Description

ECM measures the angle of the crankshaft based on the pulse signal from the CKP sensor and CMP sensor for each cylinder. If it detects a large change in the angle speed of the crankshaft, it concludes occurrence of a misfire. When the number of misfire is counted by ECM beyond the DTC detecting condition, it determines the cylinder where the misfire occurred and output it as DTC.

DTC Detecting Condition and Trouble Area

DTC detecting condition	Trouble area
DTC P0300: • Misfire, which causes catalyst to overheat during 200 engine revolutions, is detected at 2 or more cylinders. (MIL flashes as long as this misfire occurs continuously.) or • Misfire, which affects exhaust emission adversely during 1000 engine revolution, is detected at 2 or more cylinders. (2 driving cycle detection logic)	• Ignition system • Fuel injector and its circuit • Fuel pressure • EGR system • Abnormal air drawn in • Engine compression • Valve lash adjuster • Valve timing • Fuel shortage • Exhaust system • Fuel of poor quality
DTC P0301, P0302, P0303, P0304: • Misfire, which causes catalyst to overheat during 200 engine revolutions, is detected at 1 cylinder. (MIL flashes as long as this misfire occurs continuously.) or • Misfire, which affects exhaust emission adversely during 1000 engine revolution, is detected at 1 cylinder. (2 driving cycle detection logic)	

DTC Confirmation Procedure

⚠ WARNING

- **When performing a road test, select a place where there is no traffic or possibility of a traffic accident and be very careful during testing to avoid occurrence of an accident.**
- **Road test should be carried out by 2 persons, a driver and a tester, on a level road.**

NOTE

Check to make sure that following conditions are satisfied when using this “DTC Confirmation Procedure”.

- **Intake air temp.: –7 °C, 19.4 °F or more**
- **Engine coolant temp.: –10 °C, 14 °F or more**
- **Altitude (barometric pressure): 2500 m, 8200 ft or less (560 mmHg, 74.4 kPa or more)**

1) With ignition switch turned OFF, connect scan tool.
2) Turn ON ignition switch and print Freeze Frame Data or write them down using scan tool.
3) Clear DTC using scan tool.
4) Drive vehicle under freeze frame data condition as noted for 1 min. or more.
5) Stop vehicle and check DTC and pending DTC.

DTC Troubleshooting

NOTE

If the vehicle runs under fuel deficient condition (such as a condition in which the fuel pump is unable to draw fuel properly), DTC of misfire may possibly be detected due to fuel pressure drop even though there is no abnormal condition existing in the Engine and Emission System.
Therefore, if the DTC still cannot be detected with "Trouble Symptom Confirmation" executed in accordance with "Engine and Emission Control System Check" the possible cause may be due to a running condition under insufficient fuel supply at the time of detecting DTC of misfire.

Step	Action	Yes	No
1	*Was "Engine and Emission Control System Check" performed?*	Go to Step 2.	Go to "Engine and Emission Control System Check".
2	*Does fuel level meter indicate "E" level (empty)?*	Add fuel and recheck.	Go to Step 3.
3	**Fuel quality check** 1) Check that there is fuel of good quality in the fuel tank. *Is it OK?*	Go to Step 4.	Clean in fuel system circuit and change fuel.
4	**Ignition system check** 1) Check spark plug and ignition spark of cylinder where misfire occurs, referring to "Spark Plug Inspection in Section 1H" and "Ignition Spark Test in Section 1H". *Are they in good condition?*	Go to Step 5.	Faulty ignition coil, wire harness, spark plug or other system parts.
5	**Fuel injector circuit check** 1) Using sound scope, check each injector operating sound at engine cranking or idling. *Do all injectors make operating sound?*	Go to Step 6.	Check coupler connection and wire harness of injector not making operating sound and injector itself. If OK, substitute a known-good ECM and recheck.
6	**Fuel pressure check** 1) Check fuel pressure referring to "Fuel Pressure Check". *Is check result satisfactory?*	Go to Step 7.	Repair or replace fuel system.
7	**Fuel injector check** 1) Check fuel injector(s) referring to "Fuel Injector Inspection in Section 1G". *Is check result satisfactory?*	Go to Step 8.	Replace defective injector.
8	**Ignition timing check** 1) Check ignition timing referring to "Ignition Timing Inspection in Section 1H". *Is check result satisfactory?*	Go to Step 9.	Check related sensors.
9	**EGR system check** 1) Check EGR system referring to "EGR System Inspection (If Equipped) in Section 1B". *Is check result satisfactory?*	Go to Step 10.	Repair or replace EGR system.
10	**Exhaust system check** 1) Check exhaust system for exhaust gas clogged. *Is it OK?*	Go to Step 11.	Repair clogged of exhaust system.

Step	Action	Yes	No
11	**Engine mechanical system check** 1) Check engine mechanical parts or system which can cause engine rough idle or poor performance. • Engine compression (Refer to “Compression Check in Section 1D”.) • Valve lash (Refer to “Valve Lash (Clearance) Inspection in Section 1D”.) • Valve timing (Refer to “Timing Chain and Chain Tensioner Removal and Installation in Section 1D”.) *Are they in good condition?*	Check wire harness and connection of ECM ground, ignition system and fuel injector for intermittent open and short.	Repair or replace defective part.

DTC P0327 / P0328: Knock Sensor Circuit Low / High

S7RW0A1104042

Wiring Diagram

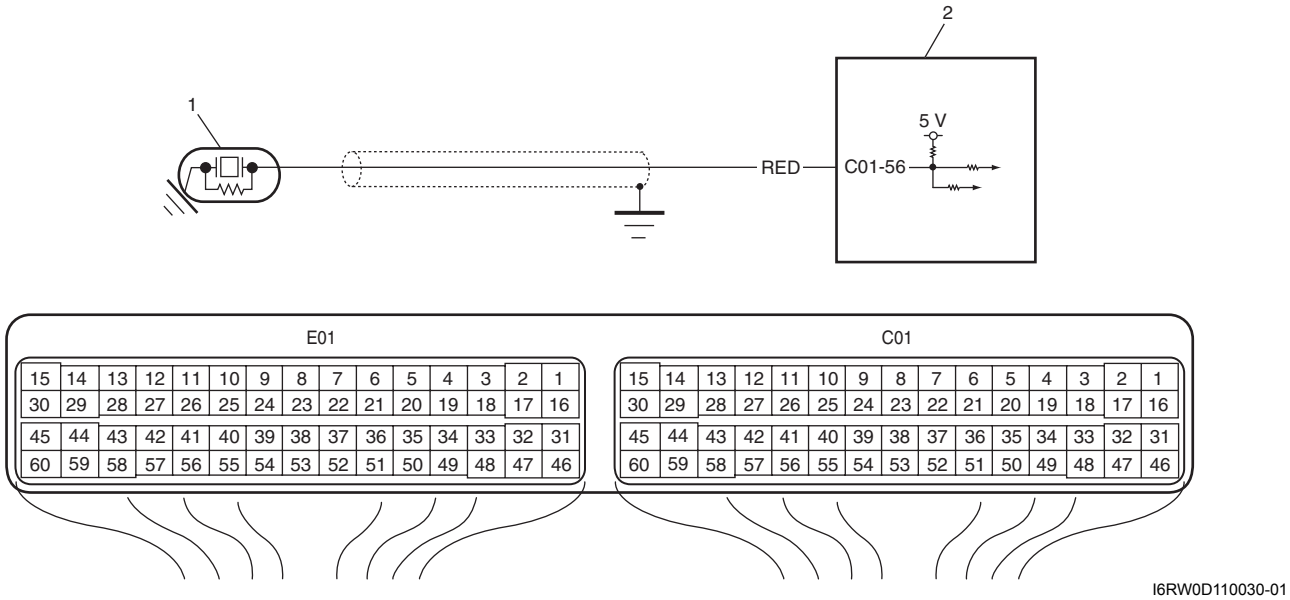

1. Knock sensor	2. ECM

DTC Detecting Condition and Trouble Area

DTC detecting condition	Trouble area
DTC P0327: Voltage of knock sensor is lower than specified value with engine running. (1 driving cycle detection logic) **DTC P0328:** Voltage of knock sensor is higher than specified value with engine running. (1 driving cycle detection logic)	• Knock sensor circuit (open or short) • Knock sensor • ECM

DTC Confirmation Procedure

1) Connect scan tool to DLC with ignition switch turned OFF.
2) Turn ON ignition switch and clear DTC, pending DTC and freeze frame data by using scan tool.
3) Start engine and run it for 10 sec.
4) Check DTC by using scan tool.

DTC Troubleshooting

NOTE

Before this troubleshooting is performed, read the precautions for DTC troubleshooting referring to "Precautions for DTC Troubleshooting".

Step	Action	Yes	No
1	*Was "Engine and Emission Control System Check" performed?*	Go to Step 2.	Go to "Engine and Emission Control System Check".
2	**Knock sensor circuit check** 1) Remove ECM from its bracket with ECM connectors connected. 2) Measure voltage between "C01-56" terminal of ECM connector and vehicle body ground with engine running. *Is voltage within 1.23 – 3.91 V?*	Intermittent trouble. Check for intermittent referring to "Intermittent and Poor Connection Inspection in Section 00". If OK, substitute a known-good ECM and recheck.	Go to Step 3.
3	**Knock sensor circuit for open check** 1) Disconnect connector from knock sensor with ignition switch turned OFF. 2) Turn ON ignition switch, measure voltage between "RED" wire of knock sensor connector and engine ground. 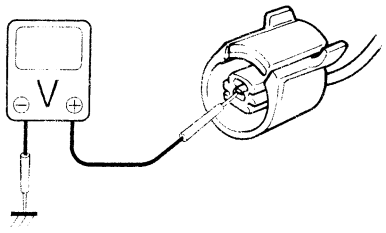 I2RH01110089-01 *Is voltage 4 – 6 V?*	Go to Step 6.	Go to Step 4.
4	**Knock sensor circuit for open check** 1) Turn ON ignition switch, measure voltage between "C01-56" terminal of ECM connector and engine ground *Is voltage 4 – 6 V?*	"RED" wire is open circuit.	Go to Step 5.
5	**Knock sensor circuit for short check** 1) Disconnect connectors from ECM with ignition switch turned OFF. 2) Measure resistance between "C01-56" terminal of ECM connector and vehicle body ground. *Is resistance infinity?*	Go to Step 6.	"RED" wire is shorted to ground circuit. If wire is OK, substitute a known-good ECM and recheck.
6	**Knock sensor circuit for short check** 1) Disconnect connectors from ECM with ignition switch turned OFF. 2) Turn ON ignition switch, measure voltage between "C01-56" terminal of ECM connector and vehicle body ground. *Is voltage 0 V?*	Go to Step 7.	"RED" wire is shorted to other circuit.

Step	Action	Yes	No
7	**Knock sensor circuit for high resistance check** 1) Turn OFF ignition switch, measure resistance between “C01-56” terminal of ECM connector and “RED” wire terminal of knock sensor harness connector. *Is resistance below 5 Ω?*	Faulty knock sensor.	“RED” wire is high resistance circuit.

DTC P0335: Crankshaft Position (CKP) Sensor Circuit

S7RW0A1104043

Wiring Diagram

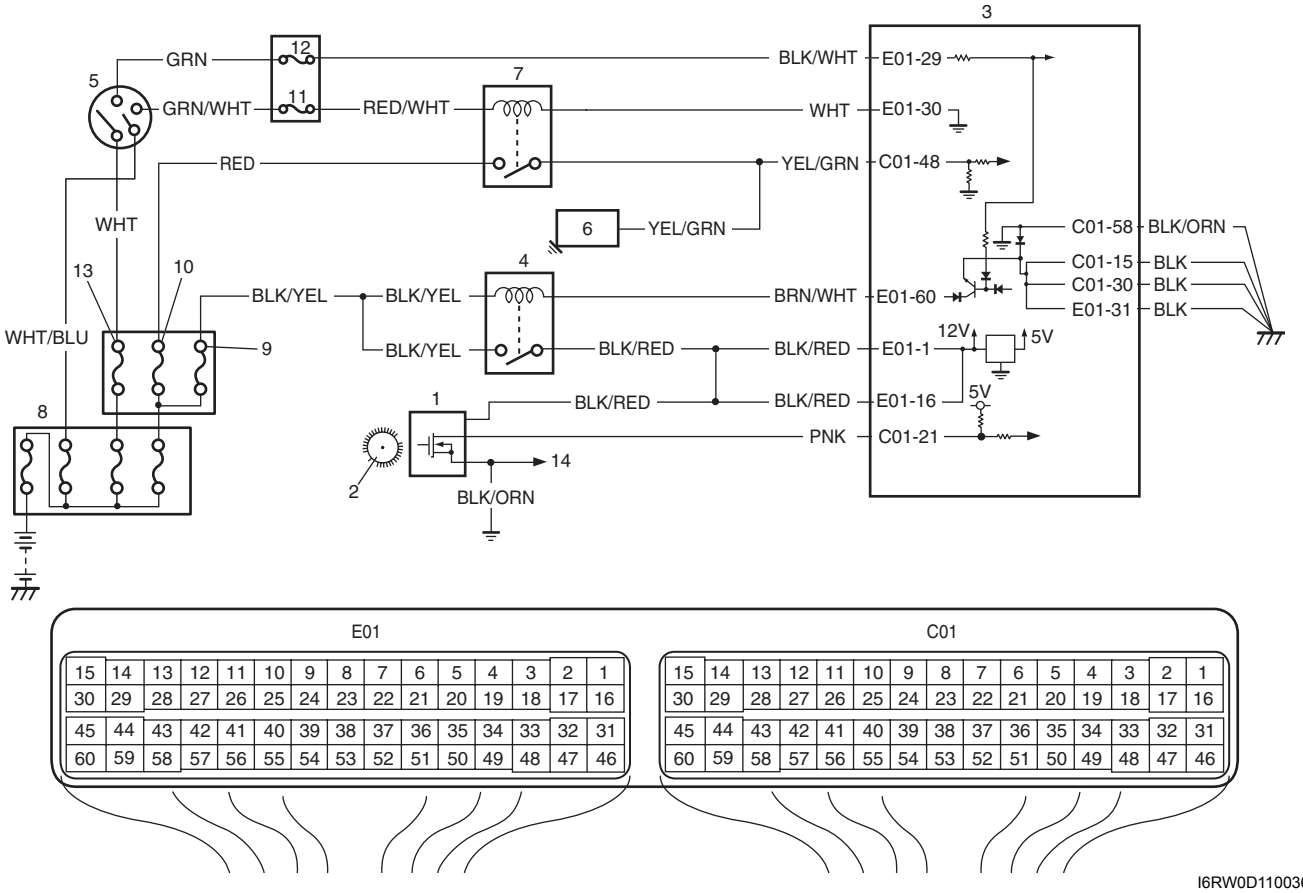

I6RW0D110036-01

1. CKP sensor	6. Starting motor	11. “ST SIG” fuse
2. Sensor plate on crankshaft	7. Starting motor control relay	12. “IG COIL” fuse
3. ECM	8. Main fuse box	13. “IGN” fuse
4. Main relay	9. “FI” fuse	14. To CMP sensor
5. Ignition switch	10. “ST MOT” fuse	

DTC Detecting Condition and Trouble Area

DTC detecting condition	Trouble area
No CKP sensor signal for 2 sec. even if starting motor signal is inputted at engine cranking. (1 driving cycle detection logic)	• CKP sensor circuit open or short • Sensor plate teeth damaged • CKP sensor malfunction, foreign material being attached or improper installation • ECM • Engine start signal circuit malfunction

DTC Confirmation Procedure

1) With ignition switch turned OFF, connect scan tool.
2) Turn ON ignition switch and clear DTC using scan tool.
3) Crank engine for 3 – 5 sec.
4) Check DTC and pending DTC.

DTC Troubleshooting

NOTE

Before this troubleshooting is performed, read the precautions for DTC troubleshooting referring to "Precautions for DTC Troubleshooting".

Step	Action	Yes	No
1	*Was "Engine and Emission Control System Check" performed?*	Go to Step 2.	Go to "Engine and Emission Control System Check".
2	**CKP sensor and connector for proper installation check** *Is CKP sensor installed properly and connector connected securely?*	Go to Step 3.	Correct.
3	**Wire harness and connection check** 1) Disconnect connector from CKP sensor with ignition switch turned OFF. 2) Check for proper connection to CKP sensor at "BLK/RED", "PNK" and "BLK/ORN" wire terminals. 3) If OK, turn ON ignition switch and check voltage at "BLK/RED", "PNK" and "BLK/ORN" wire terminals of disconnected CKP sensor connector. **<u>CKP sensor voltage</u>** **Terminal "B+": 10 – 14 V** **Terminal "Vout": 4 – 5 V** **Terminal "GND": 0 V** 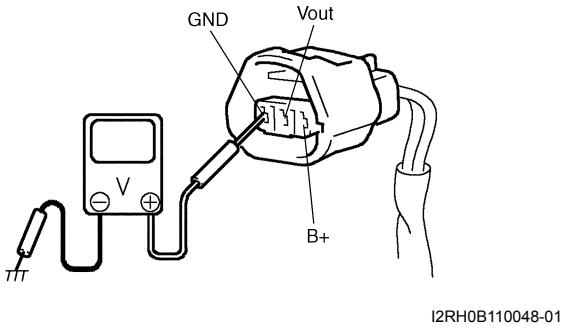 *Is check result satisfactory?*	Go to Step 7.	Go to Step 4.
4	*Was terminal "Vout" voltage in Step 3 within specification?*	Go to Step 5.	"PNK" wire is open or shorted to ground / power supply circuit. If wire and connection are OK, substitute a known-good ECM and recheck.

Step	Action	Yes	No
5	**Ground circuit check** 1) Turn ignition switch to OFF position. 2) Measure resistance between “BLK/ORN” wire terminal of CKP sensor connector and engine ground. *Is measured resistance value less than 3 Ω?*	Go to Step 6.	“BLK/ORN” wire is open or high resistance.
6	*Was terminal “B+” voltage in Step 3 within specification?*	Go to Step 7.	“BLK/RED” wire is open circuit. If wire and connection are OK, substitute a known-good ECM and recheck.
7	**Engine start signal check** 1) Check starting motor circuit for opening and short referring to Step 2 of “DTC P0616: Starter Relay Circuit Low” and Step 3 and 4 of “DTC P0617: Starter Relay Circuit High”. *Is check result satisfactory?*	Go to Step 8.	Repair or replace.
8	**CKP sensor check** 1) Check CKP sensor and sensor plate tooth referring to “Camshaft Position (CMP) Sensor Inspection in Section 1C”. *Is check result satisfactory?*	Substitute a known-good ECM and recheck.	Replace CKP sensor and/or sensor plate.

DTC P0340: Camshaft Position (CMP) Sensor Circuit

S7RW0A1104044

Wiring Diagram

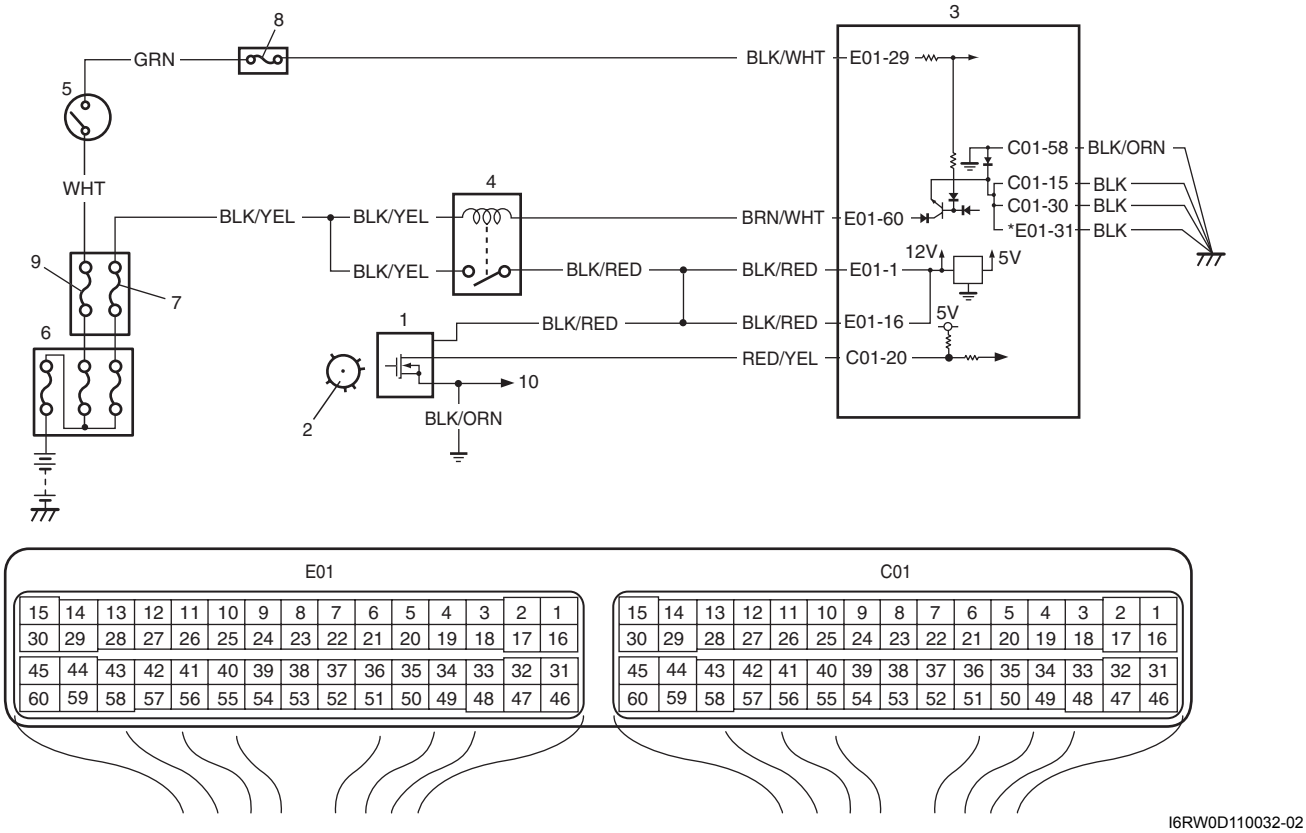

I6RW0D110032-02

1. CMP sensor	3. ECM	5. Ignition switch	7. “FI” fuse	9. “IGN” fuse
2. Signal rotor	4. Main relay	6. Main fuse box	8. “IG COIL” fuse	10. To CKP sensor

System Description

The CMP sensor located on the transmission side of cylinder head (VVT model) or timing chain cover (non-VVT model) consists of the signal generator (magnetic sensor) and signal rotor (intake camshaft portion (VVT model) or exhaust camshaft timing sprocket (non-VVT model)).
The signal generator generates reference signal through slits in the slit plate which turns together with the camshaft.

Reference signal

The CMP sensor generates 6 pulses of signals each of which has a different waveform length while the camshaft makes one full rotation. Refer to “Inspection of ECM and Its Circuits”.
Based on these signals, ECM judges which cylinder piston is in the compression stroke and the engine speed.

DTC Detecting Condition and Trouble Area

DTC detecting condition	Trouble area
• CMP sensor pulse is less than 20 pulses per crankshaft 8 revolutions or • CMP sensor pulse is more than 28 pulses per crankshaft 8 revolutions or • CMP sensor pulse is less than 20 pulses between BTDC 75° CA and BTDC 5° CA with crankshaft 8 revolutions from engine start. (1 driving cycle detection logic)	• CMP sensor circuit open or short • Signal rotor teeth damaged • CMP sensor malfunction, foreign material being attached or improper installation • ECM

DTC Confirmation Procedure

1) With ignition switch turned OFF, connect scan tool.
2) Turn ON ignition switch and clear DTC using scan tool.
3) Crank engine for 5 sec.
4) Check DTC and pending DTC.

DTC Troubleshooting

NOTE

Before this troubleshooting is performed, read the precautions for DTC troubleshooting referring to “Precautions for DTC Troubleshooting”.

Step	Action	Yes	No
1	*Was “Engine and Emission Control System Check” performed?*	Go to Step 2.	Go to “Engine and Emission Control System Check”.
2	**CMP sensor and connector for proper installation check** *Is CMP sensor installed properly and connector connected securely?*	Go to Step 3.	Correct.

Step	Action	Yes	No
3	**Wire harness and connection check** 1) Disconnect connector from CMP sensor. 2) Check for proper connection to CMP sensor at “BLK/RED”, “RED/YEL” and “BLK/ORN” wire terminals. 3) If OK, turn ON ignition switch and check voltage at “BLK/RED”, “RED/YEL” and “BLK/ORN” wire terminals of disconnected CMP sensor connector. **CMP sensor voltage** **Terminal “B+”: 10 – 14 V** **Terminal “Vout”: 4 – 5 V** **Terminal “GND”: 0 V** **For engine without VVT system** 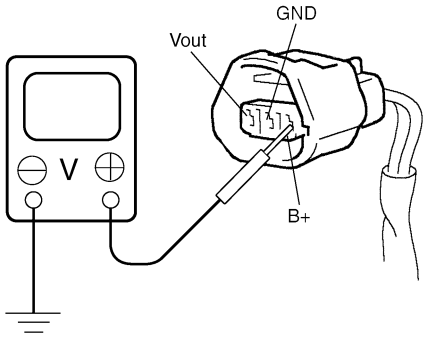 I4RS0B110031-01 **For engine with VVT system** 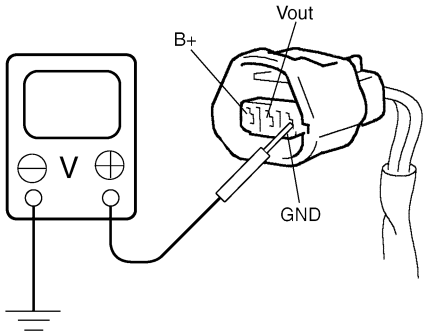 I4RS0B110094-01 *Is check result satisfactory?*	Go to Step 7.	Go to Step 4.
4	*Was terminal “Vout” voltage in Step 3 within specification?*	Go to Step 5.	“RED/YEL” wire is open or shorted to ground / power supply circuit. If wire and connection are OK, substitute a known-good ECM and recheck.
5	**Ground circuit check** 1) Turn ignition switch to OFF position. 2) Measure resistance between “BLK/ORN” wire terminal of CMP sensor connector and engine ground. *Is measured resistance value less than 3 Ω?*	Go to Step 6.	“BLK/ORN” wire is open or high resistance circuit.
6	*Was terminal “B+” voltage in Step 3 within specification?*	Go to Step 7.	“BLK/RED” wire is open circuit. If wire and connection are OK, substitute a known-good ECM and recheck.

Step	Action	Yes	No
7	**CMP sensor check** 1) Check CMP sensor and signal rotor tooth referring to “Camshaft Position (CMP) Sensor Inspection in Section 1C”. *Is check result satisfactory?*	Substitute a known-good ECM and recheck.	Replace CMP sensor and/or intake camshaft.

DTC P0401 / P0402: Exhaust Gas Recirculation Flow Insufficient Detected / Excessive Detected

S7RW0A1104045

System and Wiring Diagram

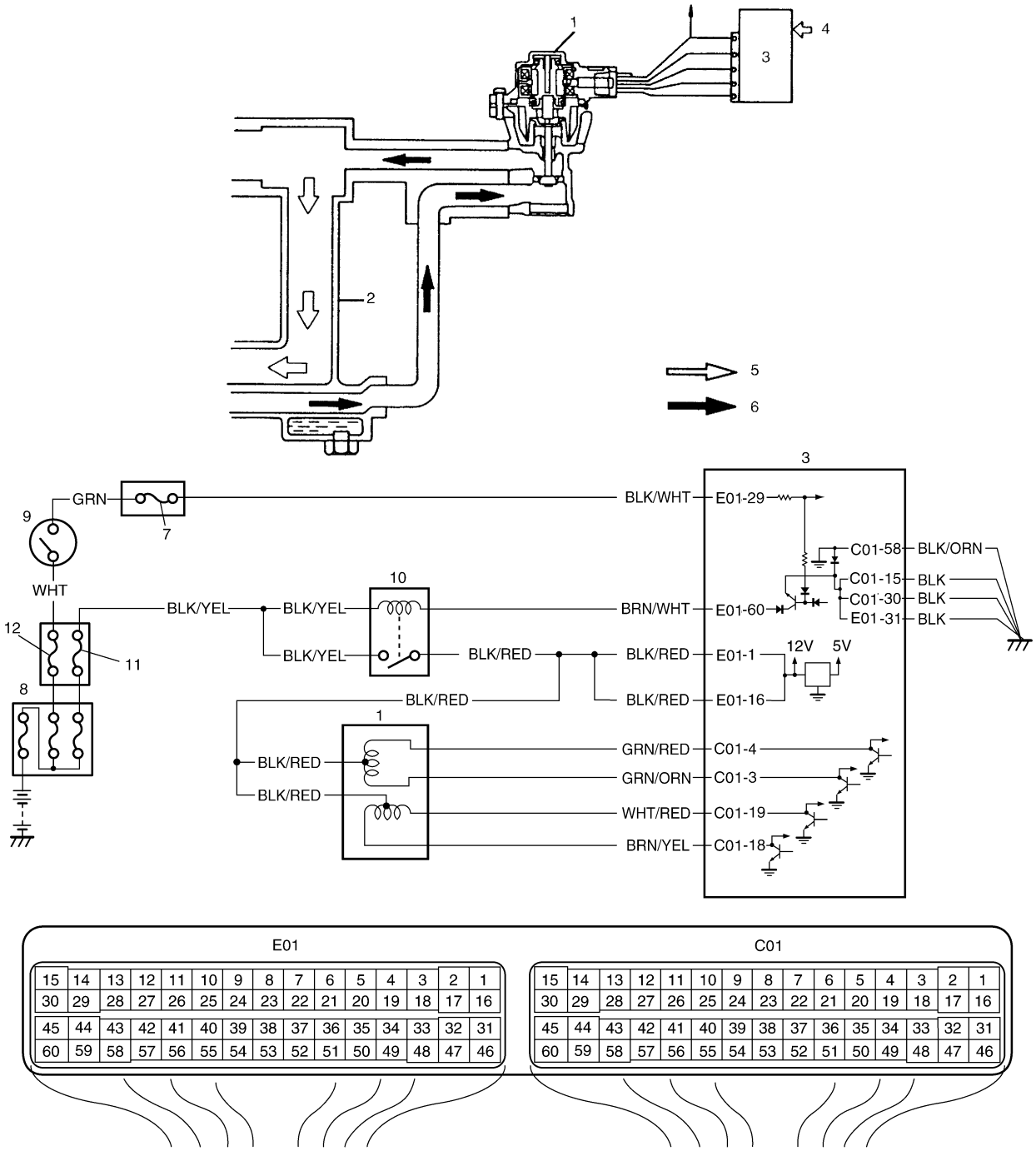

I6RW0D110034-01

1. EGR valve	4. Sensed information	7. “IG COIL” fuse	10. Main relay
2. Intake manifold	5. Fresh air	8. Main fuse box	11. “FI” fuse
3. ECM	6. Exhaust gas	9. Ignition switch	12. “IGN” fuse

DTC Detecting Condition and Trouble Area

DTC detecting condition	Trouble area
DTC P0401: Difference in intake manifold absolute pressure between opened EGR valve and closed EGR valve is smaller than specified value. (2 driving cycle detection logic, monitoring once / 1 driving) **DTC P0402:** Difference in intake manifold absolute pressure between opened EGR valve and closed EGR valve is larger than specified value. (2 driving cycle detection logic, monitoring once / 1 driving)	• EGR valve • EGR passage • MAP sensor • ECM

DTC Confirmation Procedure

⚠ WARNING

- **When performing a road test, select a place where there is no traffic or possibility of a traffic accident and be very careful during testing to avoid occurrence of an accident.**
- **Road test should be carried out by 2 persons, a driver and a tester, on a level road.**

NOTE

Check to make sure that following conditions are satisfied when using this "DTC confirmation procedure".

- **Intake air temperature at engine start: –10 °C (14 °F) to 80 °C (176 °F)**
- **Intake air temperature: –10 °C (14 °F) to 70 °C (158 °F)**
- **Engine coolant temperature: 70 °C (158 °F) or more**
- **Altitude (barometric pressure): 2500 m, 8200 ft or less (560 mmHg, 74.4 kPa or more)**

1) With ignition switch turned OFF, connect scan tool.
2) Turn ON ignition switch and clear DTC using scan tool.
3) Start engine and warm up to normal operating temperature.
4) Run engine at idle for 10 min.
5) Drive vehicle and increase engine speed 3000 rpm in 3rd gear or "3" range.
6) Release accelerator pedal and with engine brake applied, keep vehicle coasting for 5 sec. or more. (Keep fuel cut condition for 5 sec. or more) If fuel cut condition is not kept for 5 sec. or more, coast down a slope in engine speed 1000 – 3000 rpm for 5 sec. or more.
7) Stop vehicle and run engine at idle.
8) For european market model, check whether EGR system readiness/monitoring test has completed or not by using scan tool.
   If evaporative system readiness/monitoring test has not completed, check vehicle conditions (environmental) and repeat Steps 3) through 7).
9) Check DTC and pending DTC.

DTC Troubleshooting

NOTE

Before this troubleshooting is performed, read the precautions for DTC troubleshooting referring to "Precautions for DTC Troubleshooting".

Step	Action	Yes	No
1	*Was "Engine and Emission Control System Check" performed?*	Go to Step 2.	Go to "Engine and Emission Control System Check".
2	*Do you have SUZUKI scan tool?*	Go to Step 3.	Go to Step 5.
3	**EGR valve operation check** 1) With ignition switch turned OFF, install SUZUKI scan tool to DTC. 2) Check EGR system referring to "EGR System Inspection (If Equipped) in Section 1B". *Is it in good condition?*	Go to Step 4.	Go to Step 5.
4	**MAP sensor check** 1) Check MAP sensor for performance referring to "Manifold Absolute Pressure (MAP) Sensor Inspection (If Equipped) in Section 1C". *Is check result satisfactory?*	Intermittent trouble or faulty ECM. Check for intermittent referring to "Intermittent and Poor Connection Inspection in Section 00".	Replace MAP sensor.
5	**EGR valve control circuit check** 1) Check that EGR valve control circuits are in good condition referring to Step 2 to 5 of "DTC P0403: Exhaust Gas Recirculation Control Circuit" *Are circuits in good condition?*	Go to Step 6.	Repair or replace EGR valve control circuit(s).
6	**EGR valve check** 1) Check EGR valve referring to "EGR Valve Inspection (If Equipped) in Section 1B". *Is check result satisfactory?*	Go to Step 7.	Faulty EGR valve.
7	**MAP sensor check** 1) Check MAP sensor for performance referring to "Manifold Absolute Pressure (MAP) Sensor Inspection (If Equipped) in Section 1C". *Is check result satisfactory?*	EGR passage clogged. If OK, substitute a known-good ECM and recheck.	Replace MAP sensor.

DTC P0403: Exhaust Gas Recirculation Control Circuit

S7RW0A1104046

Wiring Diagram

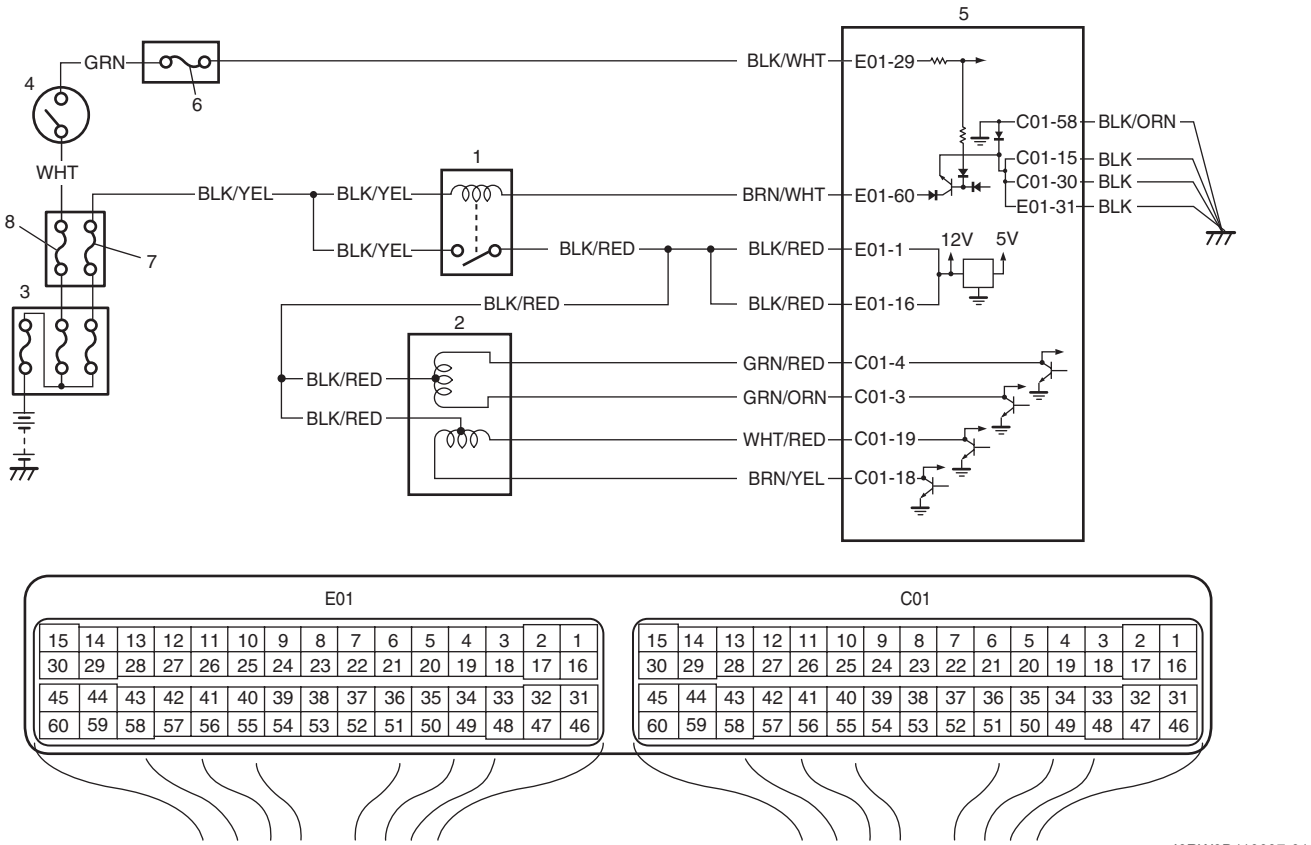

1. Main relay	3. Main fuse box	5. ECM	7. “FI” fuse
2. EGR valve	4. Ignition switch	6. “IG COIL” fuse	8. “IGN” fuse

DTC Detecting Condition and Trouble Area

DTC detecting condition	Trouble area
EGR valve output voltage is different from output command with more than one pole out of 4 poles. (1 driving cycle detection logic)	• EGR valve circuit open • EGR valve • ECM

DTC Confirmation Procedure

⚠ WARNING

- **When performing a road test, select a place where there is no traffic or possibility of a traffic accident and be very careful during testing to avoid occurrence of an accident.**
- **Road test should be carried out by 2 persons, a driver and a tester, on a level road.**

1) With ignition switch turned OFF, connect scan tool to DLC.
2) Turn ON ignition switch and clear DTC using scan tool.
3) Start engine and warm it up to normal operating temperature.
4) Drive vehicle in 2000 – 3500 rpm of engine speed.
5) Keep above vehicle speed for 1 min. (Throttle valve opening is kept constant in this step.)
6) Stop vehicle and check DTC and pending DTC.

DTC Troubleshooting

NOTE

Before this troubleshooting is performed, read the precautions for DTC troubleshooting referring to "Precautions for DTC Troubleshooting".

Step	Action	Yes	No
1	*Was "Engine and Emission Control System Check" performed?*	Go to Step 2.	Go to "Engine and Emission Control System Description".
2	**EGR valve power supply circuit check** 1) Remove air intake pipe. 2) With ignition switch turned OFF, disconnect EGR valve connector. 3) With ignition switch turned ON, measure voltage between "BLK/RED" wire terminal of EGR valve connector and vehicle body ground. *Is check voltage 10 – 14 V?*	Go to Step 3.	"BLK/RED" wire is open circuit.
3	**Wire circuit check** 1) Disconnect connectors from ECM with ignition switch turned OFF. 2) Turn ON ignition switch. 3) Measure voltage between engine ground and each "GRN/RED", "GRN/ORN", "WHT/RED", "BRN/YEL" wire terminals of EGR valve connector. *Is each voltage 0 V?*	Go to Step 4.	Faulty wire(s) are shorted to other circuit. If wires are OK, substitute a known-good ECM and recheck.
4	**Wire circuit check** 1) With ignition switch turned OFF, measure resistance between engine ground and each "GRN/RED", "GRN/ORN", "WHT/RED", "BRN/YEL" wire terminals of EGR valve connector. *Is resistance infinity?*	Go to Step 5.	Faulty wire(s) are shorted to ground circuit. If wires are OK, substitute a known-good ECM and recheck.
5	**Short circuit check for EGR valve control circuit** 1) With ignition turned OFF, measure resistance between each EGR valve control circuit wire ("GRN/RED", "GRN/ORN", "WHT/RED" and "BRN/YEL" wire) and each EGR valve control circuit wire. *Is each resistance infinity?*	Go to Step 6.	Faulty wire(s) are short circuit.
6	**EGR valve stepper motor coil circuit check** 1) With ignition switch turned OFF, connect EGR valve connector. 2) Measure resistance between "E01-1/16" and each "C01-4", "C013", "C01-19", "C01-18" terminals of ECM connector. *Is each resistance 20 – 31 Ω at 20 °C, 68 °F?*	Faulty ECM. Substitute a known-good ECM and recheck.	Go to Step 7.
7	**EGR valve check** 1) Check EGR valve resistance referring to "EGR Valve Inspection (If Equipped) in Section 1B". *Is resistance within specified value?*	Faulty wire(s) are open or high resistance circuit. If wires are OK, substitute a known-good ECM and recheck.	Faulty EGR valve.

DTC P0420: Catalyst System Efficiency below Threshold

S7RW0A1104047

System and Wiring Diagram

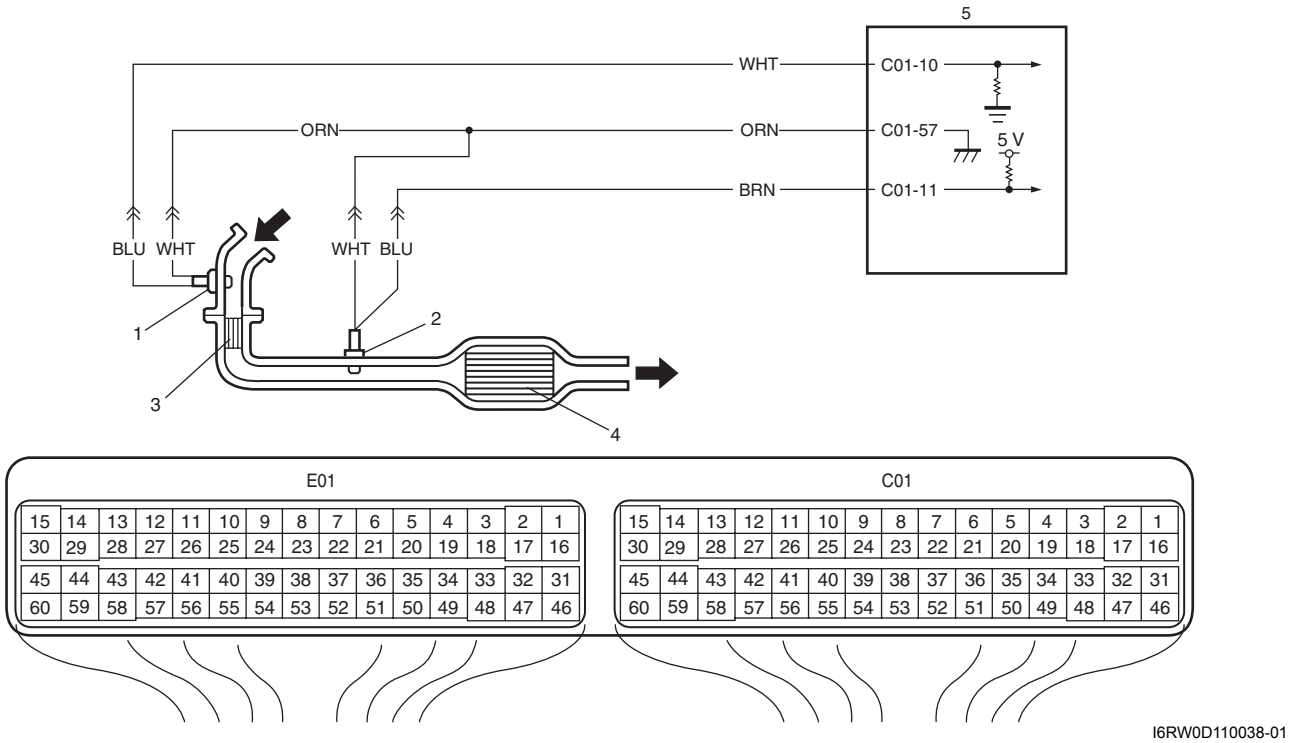

1. HO2S-1	3. Warm up three way catalytic converter	5. ECM
2. HO2S-2	4. Three way catalytic converter	

Circuit Description

ECM monitors oxygen concentration in the exhaust gas which has passed the warm up three way catalytic converter by HO2S-2. When the catalyst is functioning properly, the variation cycle of HO2S-2 output voltage (oxygen concentration) is slower than that of HO2S-1 output voltage because of the amount of oxygen in the exhaust gas which has been stored in warm up three way catalytic converter.

DTC Detecting Condition and Trouble Area

DTC detecting condition	Trouble area
• While vehicle running at constant speed under other than high load. • Time from rich or lean switching command is output till HO2S-2 output voltage crosses 0.45 V is less than specified value. (2 driving cycle detection logic, monitoring once / 1 driving)	• Exhaust gas leak • Warm up three way catalytic converter malfunction • HO2S-2 malfunction • HO2S-1 malfunction

DTC Confirmation Procedure

⚠ WARNING

- **When performing a road test, select a place where there is no traffic or possibility of a traffic accident and be very careful during testing to avoid occurrence of an accident.**
- **Road test should be carried out by 2 persons, a driver and a tester, on a level road.**

NOTE

Check to make sure that following conditions are satisfied when using this "DTC Confirmation Procedure".

- **Intake air temperature at engine start: –10 (14 °F) to 80 °C (176 °F)**
- **Intake air temperature: –10 °C (14 °F) to 70 °C (158 °F)**
- **Engine coolant temp.: 70 °C, 158 °F or more**
- **Altitude (barometric pressure): 2500 m, 8200 ft or less (560 mmHg, 74.4 kPa or more)**

1) Connect scan tool to DLC with ignition switch turned OFF.
2) Turn ON ignition switch and clear DTC using scan tool.
3) Increase vehicle speed to 40 – 50 mph, 60 – 80 km/h.
4) Keep above vehicle speed for 10 min. or more (Throttle valve opening is kept constant in this step).
5) Stop vehicle.
6) For european market model, check whether catalyst monitoring readiness/monitoring test has completed or not by using scan tool.
   If evaporative system readiness/monitoring test has not completed, check vehicle conditions (environmental) and repeat Steps 3) through 5).
7) Check DTC and pending DTC.

DTC Troubleshooting

NOTE

Before this troubleshooting is performed, read the precautions for DTC troubleshooting referring to "Precautions for DTC Troubleshooting".

Step	Action	Yes	No
1	*Was "Engine and Emission Control System Check" performed?*	Go to Step 2.	Go to "Engine and Emission Control System Check".
2	**Exhaust system visual check** 1) Check exhaust system for leaks, damage and loose connection. *Is it in good condition?*	Go to Step 3.	Repair or replace defective part.
3	**HO2S-2 output voltage check** 1) Check output voltage of HO2S-2 referring to "DTC P0137 / P0138: O2 Sensor (HO2S) Circuit Low Voltage / High Voltage (Sensor-2)". *Is check result satisfactory?*	Replace exhaust manifold (built in warm up three way catalytic converter) and exhaust center pipe (built in three way catalytic converter).	Check "BRN" and / or "ORN" wires for open and short, and connections for poor connection. If wires and connections are OK, replace HO2S-2.

DTC P0443: Evaporative Emission System Purge Control Valve Circuit

S7RW0A1104048

Wiring Diagram

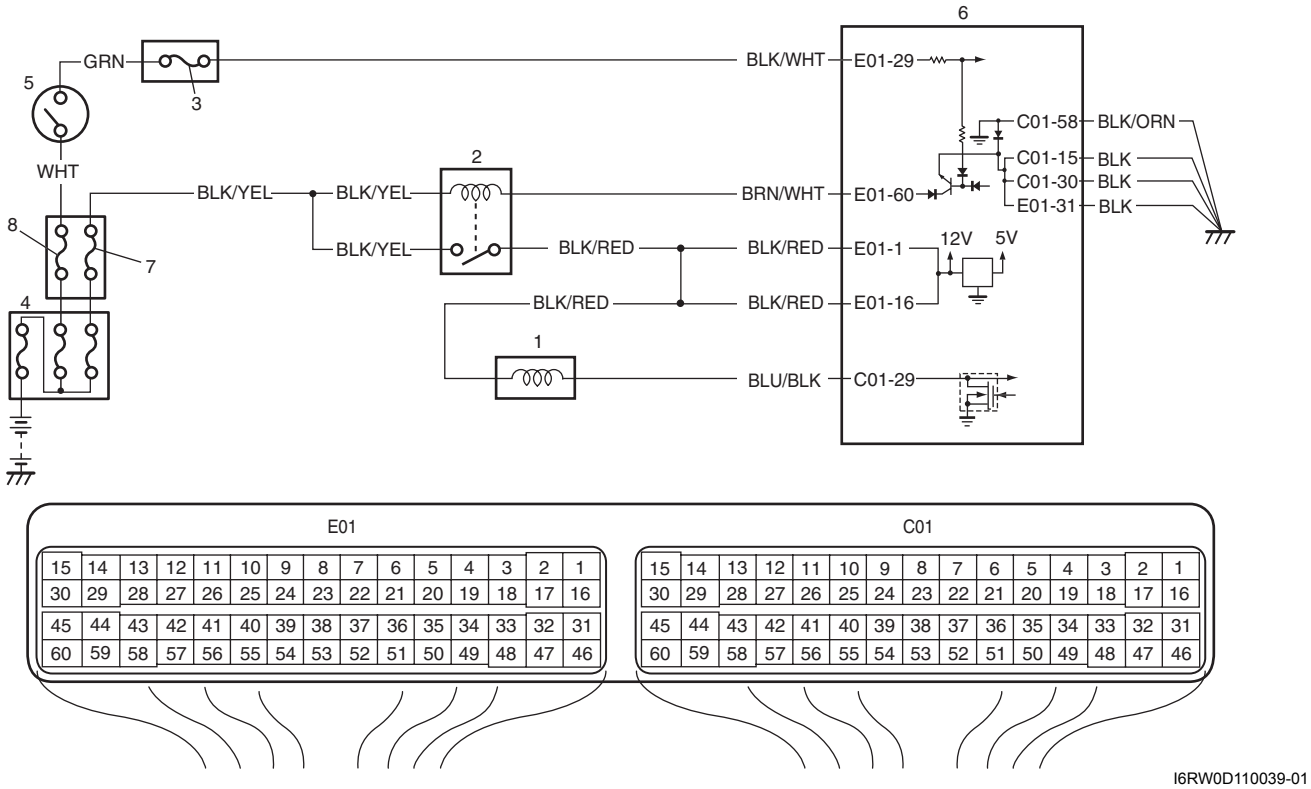

1. EVAP canister purge valve	3. "IG COIL" fuse	5. Ignition switch	7. "FI" fuse
2. Main relay	4. Main fuse box	6. ECM	8. "IGN" fuse

DTC Detecting Condition and Trouble Area

DTC detecting condition	Trouble area
Monitor signal of EVAP canister purge valve is different from command signal. (Circuit open or short) (2 driving cycle detection logic)	• EVAP canister purge valve • EVAP canister purge valve circuit • ECM

DTC Confirmation Procedure

⚠ WARNING

- **When performing a road test, select a place where there is no traffic or possibility of a traffic accident and be very careful during testing to avoid occurrence of an accident.**
- **Road test should be carried out by 2 persons, a driver and a tester, on a level road.**

1) With ignition switch OFF, connect scan tool to DLC.
2) Turn ON ignition switch and clear DTC using scan tool.
3) Start engine and warm up normal operating temperature.
4) Drive vehicle at more than 40 km/h, 25 mph for 5 min. or more.
5) Check DTC and pending DTC.

DTC Troubleshooting

⚠ WARNING

In order to reduce risk of fire and personal injury, this work must be performed in a well ventilated area and away from any open flames such as gas water heater.

NOTE

Before this troubleshooting is performed, read the precautions for DTC troubleshooting referring to "Precautions for DTC Troubleshooting".

Step	Action	Yes	No
1	*Was "Engine and Emission Control System Check" performed?*	Go to Step 2.	Go to "Engine and Emission Control System Check".
2	**EVAP canister purge power supply circuit check** 1) Turn OFF ignition switch and disconnect connector from EVAP canister purge valve. 2) Measure voltage between engine ground and "BLK/RED" wire terminal of EVAP canister purge valve connector with ignition switch turned ON. *Is it voltage 10 – 14 V?*	Go to Step 3.	"BLK/RED" wire is open circuit.
3	**Wire circuit check** 1) Disconnect connectors from ECM with ignition switch turned OFF. 2) Measure resistance between "C01-29" terminal of ECM connector and vehicle body ground. *Is resistance infinity?*	Go to Step 4.	"BLU/BLK" wire is shorted to ground circuit.
4	**Wire circuit check** 1) Measure voltage between "C01-29" terminal of ECM connector and vehicle body ground with ignition switch turned ON. *Is voltage 0 V?*	Go to Step 5.	"BLU/BLK" wire is shorted to other circuit.
5	**Wire circuit check** 1) Connect connector to purge control valve with ignition switch turned OFF. 2) Turn ON ignition switch and measure voltage between "C01-29" terminal of ECM connector and vehicle body ground. *Is it voltage 10 – 14 V?*	Go to Step 6.	"BLU/BLK" wire is open circuit.
6	**EVAP canister purge control valve check** 1) Check EVAP canister purge control valve referring to "EVAP Canister Purge Valve Inspection in Section 1B". *Is it in good condition?*	Go to Step 7.	Faulty EVAP canister purge control valve.
7	**EVAP canister purge control circuit check** 1) With ignition switch turn OFF, measure resistance between "E01-1/16" terminal and "C01-29" terminal of ECM connector. *Is resistance below 34 Ω at 20 ℃, 68 ℉?*	Faulty ECM. Substitute a known-good ECM and recheck.	"BLK/RED" and/or "BLU/BLK" wire are high resistance circuit.

DTC P0462 / P0463: Fuel Level Sensor Circuit Low / High

S7RW0A1104049

Wiring Diagram

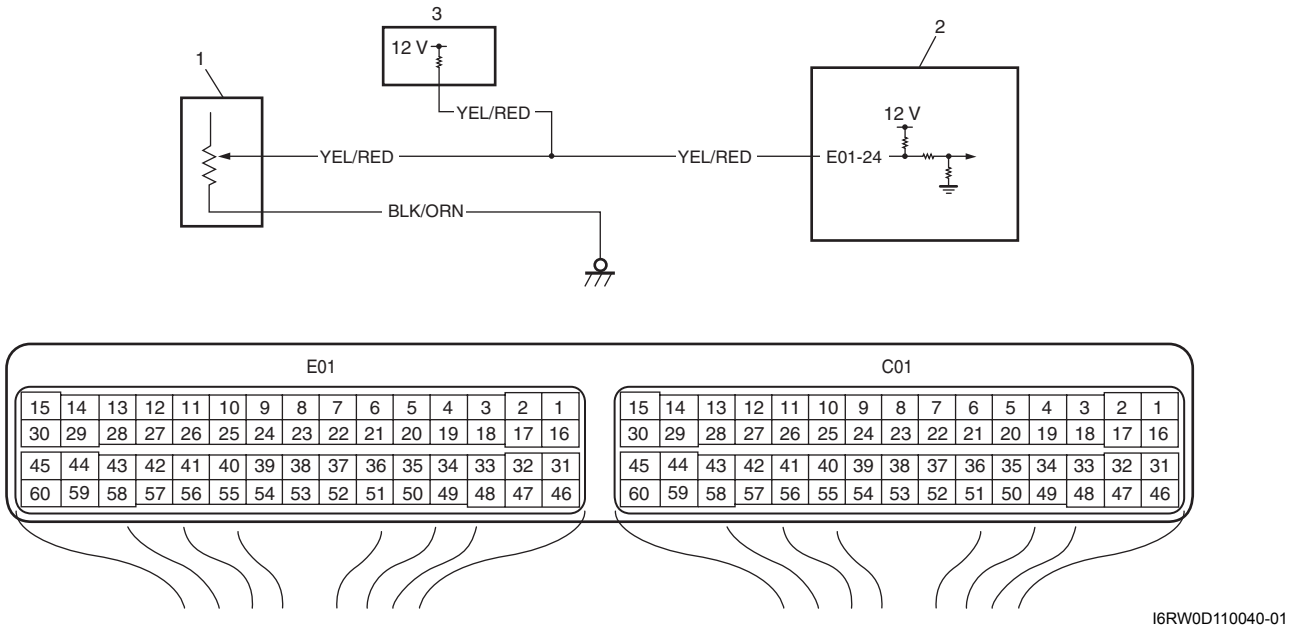

1. Fuel level sensor (gauge)	2. ECM	3. Combination meter

DTC Detecting Condition and Trouble Area

DTC detecting condition	Trouble area
P0462: Fuel level sensor voltage is lower than specified value for 3 sec. (1 driving cycle detection logic but MIL does not light up) **P0463:** Fuel level sensor voltage is higher than specified value for 30 sec. (1 driving cycle detection logic but MIL does not light up)	• "YEL/RED" circuit malfunction • ECM power and/or ground circuit malfunction • ECM malfunction

DTC Confirmation Procedure

1) With ignition switch turned OFF, connect scan tool.
2) Turn ON ignition switch and clear DTC using scan tool.
3) Start engine and run it for 30 sec. or more.
4) Check DTC and pending DTC.

DTC Troubleshooting

NOTE

Before this troubleshooting is performed, read the precautions for DTC troubleshooting referring to "Precautions for DTC Troubleshooting".

Step	Action	Yes	No
1	*Was "Engine and Emission Control System Check" performed?*	Go to Step 2.	Go to "Engine and Emission Control System Check".
2	**DTC check** 1) Connect scan tool to DLC with ignition switch turned OFF. 2) Turn ON ignition switch. 3) Clear DTC and recheck DTC with scan tool. *Is there P0463?*	Go to Step 3.	Intermittent trouble. Check for intermittent referring to "Intermittent and Poor Connection Inspection in Section 00".

Step	Action	Yes	No
3	**Wire harness check** 1) Check that fuel level sensor signal circuit (“YEL/RED” wire circuit) is in good condition. *Is it in good condition?*	Go to Step 4.	Repair fuel level sensor signal circuit.
4	**ECM power and ground circuit check** 1) Check that ECM power and ground circuits are in good condition referring to “ECM Power and Ground Circuit Check”. *Are they in good condition?*	Substitute a known-good ECM and recheck.	Repair ECM power and/or ground circuit.

DTC P0480: Fan 1 (Radiator Cooling Fan) Control Circuit

S7RW0A1104050

Wiring Diagram

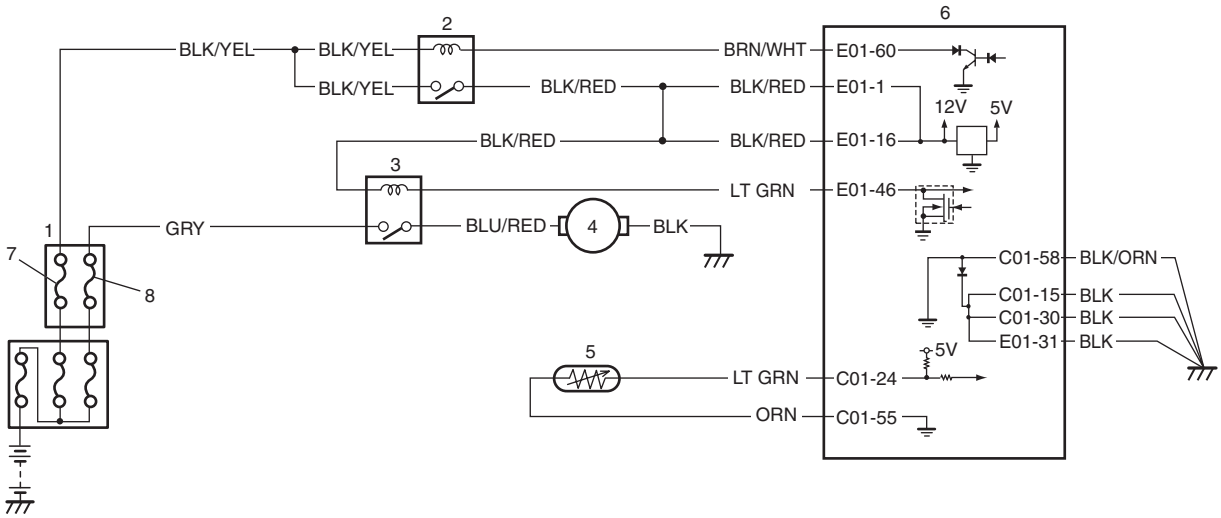

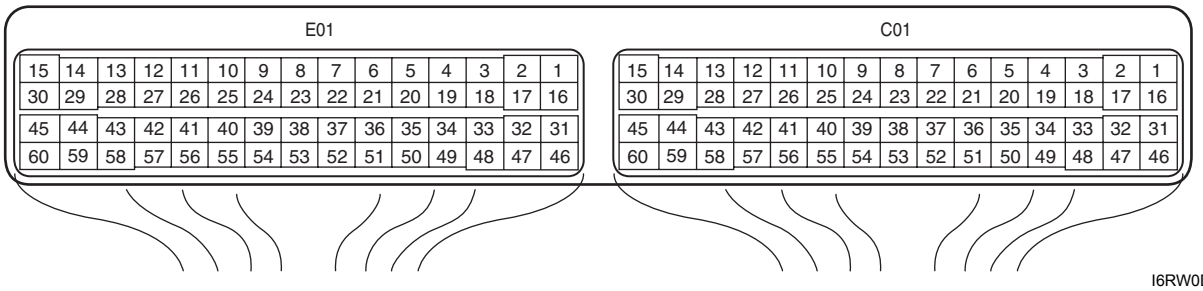

I6RW0D110041-01

1. Individual circuit fuse box No.1	4. Radiator cooling fan motor	7. “FI” fuse
2. Main relay	5. ECT sensor	8. “RDTR” fuse
3. Radiator cooling fan relay	6. ECM	

DTC Detecting Condition and Trouble Area

DTC detecting condition	Trouble area
Monitor signal of radiator cooling fan relay is different from command signal. (1 driving cycle detection logic)	• Radiator cooling fan relay circuit malfunction • Radiator cooling fan relay malfunction • ECM malfunction

DTC Confirmation Procedure

1) Turn OFF ignition switch.
2) Clear DTC with ignition switch turned ON.
3) Run engine at idle speed.
4) Check DTC.

DTC Troubleshooting

NOTE

Before this troubleshooting is performed, read the precautions for DTC troubleshooting referring to "Precautions for DTC Troubleshooting".

Step	Action	Yes	No
1	*Was "Engine and Emission Control System Check" performed?*	Go to Step 2.	Go to "Engine and Emission Control System Check".
2	**Wire circuit check** 1) Disconnect radiator cooling fan relay (1) from individual circuit fuse box No.1 with ignition switch turned OFF. 2) Turn ON ignition switch, measure voltage between engine ground to "BLK/RED" wire terminal. 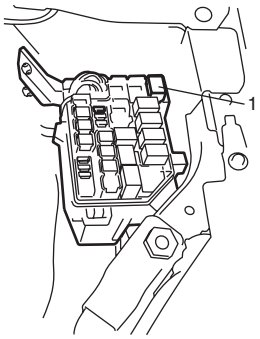 I5RW0A110036-02 *Is voltage 10 – 14 V?*	Go to Step 3.	Open wire in "BLK/RED" wire is open circuit.
3	**Wire circuit check** 1) Connect radiator cooling fan relay to individual circuit fuse box No.1 with ignition switch turned OFF. 2) Turn ON ignition switch, measure voltage between vehicle body ground and "E01-46" terminal of ECM connector when engine coolant temp. is below 100 °C (212 °F). *Is voltage 10 – 14 V?*	Go to Step 7.	Go to Step 4.
4	**Wire circuit check** 1) Disconnect connectors from ECM with ignition switch turned OFF. 2) Disconnect radiator cooling fan relay from individual circuit fuse box No.1. 3) Measure resistance between "E01-46" terminal of ECM connector and vehicle ground. *Is resistance infinity?*	Go to Step 5.	"LT GRN" wire is shorted to ground circuit.
5	**Wire circuit check** 1) Turn ON ignition switch. 2) Measure voltage between "E01-46" terminal of ECM connector and vehicle body ground. *Is voltage 0 V?*	Go to Step 7.	"LT GRN" wire is shorted to other circuit.
6	**Radiator cooling fan relay check** 1) Check radiator cooling fan relay referring to "Radiator Cooling Fan Relay Inspection in Section 1F". *Is check result satisfactory?*	"LT GRN" wire is open circuit.	Replace relay.

Step	Action	Yes	No
7	**Radiator cooling fan control check** 1) Run engine until ECT is over 100 °C, 212 °F. 2) Measure voltage between vehicle body ground and “E01-46” terminal of ECM connector. *Is voltage lower than 1.5 V?*	Intermittent trouble. Check for intermittent referring to “Intermittent and Poor Connection Inspection in Section 00”. If OK, substitute a known-good ECM and recheck.	Faulty ECM. Substitute a known-good ECM and recheck.

DTC P0481: Cooling Fan 2 (A/C Condenser Fan) Control Circuit

S7RW0A1104051

Wiring Diagram

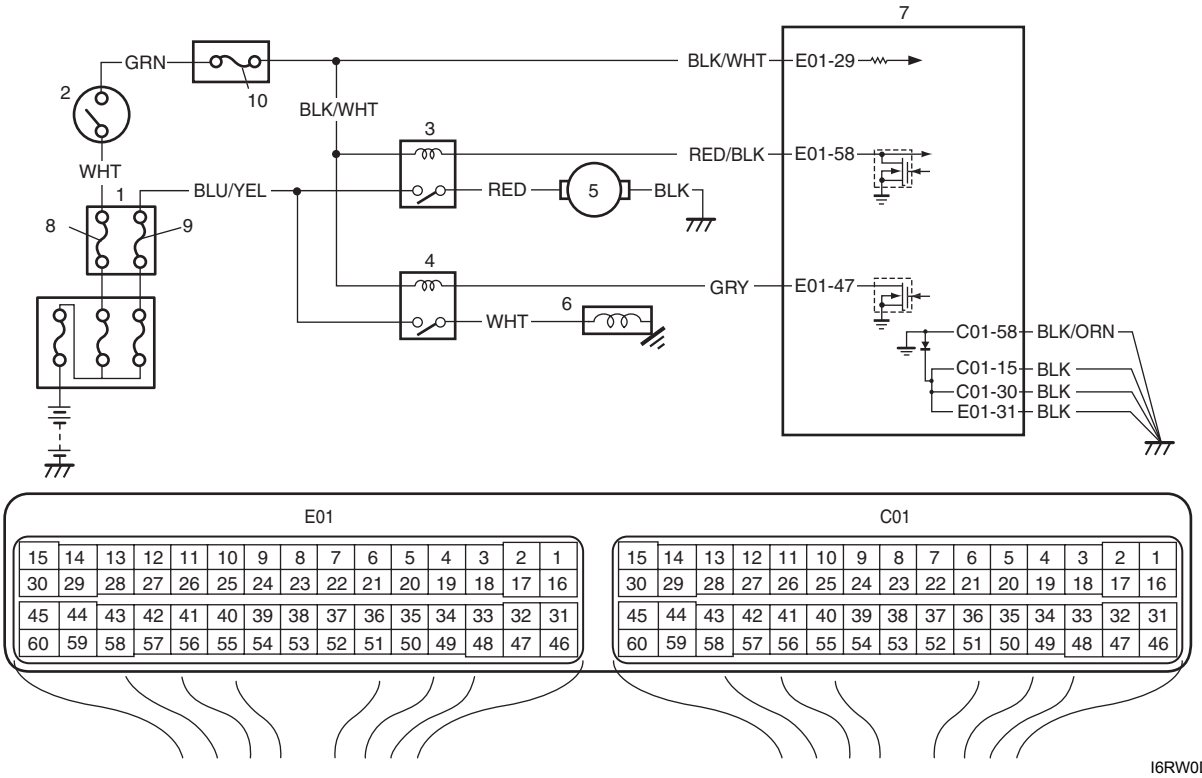

I6RW0D110042-01

1. Individual circuit fuse box No.1	5. A/C condenser cooling fan motor	9. “A/C” fuse
2. Ignition switch	6. A/C compressor	10. “IG COIL” fuse
3. A/C condenser cooling fan relay	7. ECM	
4. A/C compressor relay	8. “FI” fuse	

Circuit Description

A/C condenser cooling fan motor is turned ON and OFF by its relay which ECM controls. A/C condenser cooling fan motor is turned ON when ECM outputs A/C ON signal or when engine coolant temp. is 110 °C, 230 °F or more.

DTC Detecting Condition and Trouble Area

DTC detecting condition	Trouble area
Monitor signal of A/C condenser cooling fan relay is different from command signal. (1 driving cycle detection logic but MIL does not light up)	• A/C condenser cooling fan relay circuit malfunction • A/C condenser cooling fan relay malfunction • ECM malfunction

DTC Confirmation Procedure

1) With ignition switch turned OFF, connect scan tool.
2) Turn ON ignition switch and clear DTC using scan tool.
3) Start engine and warm up engine to normal operating temperature.
4) Run engine at idle and turn both A/C switch and heater blower switch ON (turn ON air conditioning) for 3 min. or more.
5) Check DTC and pending DTC.

DTC Troubleshooting

NOTE

Before this troubleshooting is performed, read the precautions for DTC troubleshooting referring to "Precautions for DTC Troubleshooting".

Step	Action	Yes	No
1	*Was "Engine and Emission Control System Check" performed?*	Go to Step 2.	Go to "Engine and Emission Control System Check".
2	**Check wire circuit** 1) Disconnect A/C condenser cooling fan control relay (1) from individual circuit fuse box No.1 with ignition switch turned OFF. 2) Turn ON ignition switch, measure voltage between engine ground and "BLK/WHT" wire terminal of A/C condenser cooling fan control relay. 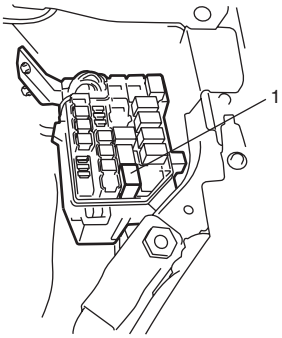 I5RW0A110038-02 *Is voltage 10 – 14 V?*	Go to Step 5.	Go to Step 3.

Step	Action	Yes	No
3	**Check wire circuit** 1) Disconnect A/C compressor control relay (1) from individual circuit fuse box No.1 with ignition switch turned OFF. 2) Turn ON ignition switch, measure voltage between engine ground and “BLK/WHT” wire terminal of A/C condenser fan control relay connector. 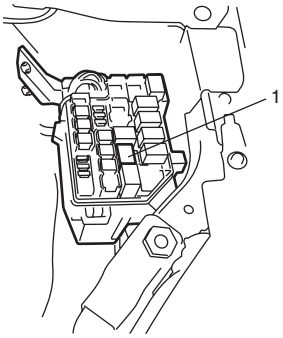 I5RW0A110039-02 *Is voltage 10 – 14 V?*	Faulty A/C compressor control relay.	Go to Step 4.
4	**Check wire circuit** 1) Remove “A/C” fuse (10 A) from individual circuit fuse box No.1 with ignition switch turned OFF. 2) Measure resistance between “BLK/WHT” wire terminal of “A/C” fuse connector and vehicle body ground. *Is resistance infinity?*	Open wire in “BLK/WHT” circuit. If OK, go to Step 5.	“BLK/WHT” wire shorted to ground circuit.
5	**Check wire circuit** 1) Connect A/C condenser cooling fan control relay to individual circuit fuse box No.1 box with ignition switch turned OFF. 2) Disconnect connectors from ECM. 3) Turn ON ignition switch, measure voltage between vehicle body ground and “E01-58” wire terminal of ECM connector. *Is voltage 10 – 14 V?*	Go to Step 9.	Go to Step 6.
6	**Check wire circuit** 1) Disconnect A/C condenser cooling fan control relay from individual circuit fuse box No.1 with ignition switch turned OFF. 2) Measure resistance between “E01-58” wire terminal of ECM connector and vehicle body ground. *Is resistance infinity?*	Go to Step 7.	“RED/BLK” wire shorted to ground circuit.
7	**Check wire circuit** 1) Turn ON ignition switch. 2) Check voltage between “E01-58” wire terminal of ECM connector and vehicle body ground. *Is voltage 0 V?*	Go to Step 8.	“RED/BLK” wire shorted to power supply circuit.
8	**Check A/C condenser cooling fan control relay** 1) Check A/C condenser cooling fan control relay referring to “A/C System Relay Inspection: Manual Type in Section 7B”. *Is result in good condition?*	Open wire in “RED/BLK” circuit.	Replace relay.

Step	Action	Yes	No
9	**Check A/C condenser cooling fan control** 1) Ignition switch turned OFF. 2) Remove ECM from vehicle body referring to “Engine Control Module (ECM) Removal and Installation in Section 1C” and connect connectors to ECM. 3) Run engine and turn ON A/C and blower fan switch. 4) Measure voltage between vehicle body ground and “E01-58” wire terminal of ECM connector. *Is voltage lower 1.5 V?*	Intermittent trouble. Check for intermittent refer to “Intermittent and Poor Connection Inspection in Section 00”. If OK, substitute a known-good ECM and recheck.	Faulty ECM.

DTC P0500: Vehicle Speed Sensor (VSS) Malfunction

S7RW0A1104052

Wiring Diagram

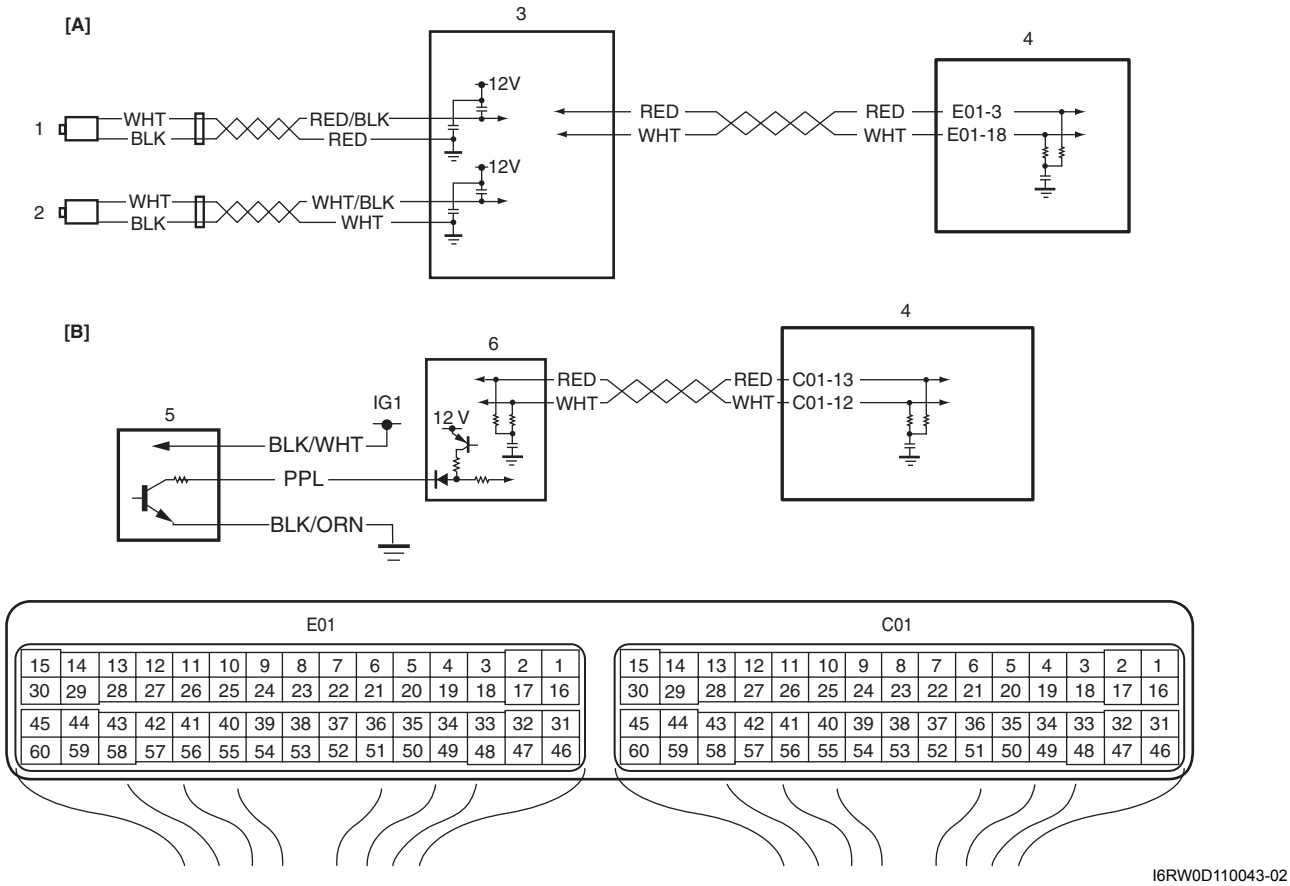

I6RW0D110043-02

[A]: For M/T model	2. Front right side wheel speed sensor (VSS 2)	5. Output shaft speed sensor
[B]: For A/T model	3. ABS / ESP® control module	6. TCM
1. Front left side wheel speed sensor (VSS 1)	4. ECM	

DTC Detecting Condition and Trouble Area

DTC detecting condition	Trouble area
Vehicle speed signal is not input while fuel is cut at deceleration for 4 seconds at 3600 rpm or less. (2 driving cycle detection logic)	• Wheel speed sensor (VSS) (for M/T model) • Wheel speed sensor circuit (for M/T model) • ABS / ESP® control module assembly (for M/T model) • Output shaft speed sensor (for A/T model) • Output shaft speed sensor circuit (for A/T model) • TCM malfunction (for A/T model) • ECM malfunction

DTC Confirmation Procedure

⚠ WARNING

- **When performing a road test, select a place where there is no traffic or possibility of a traffic accident and be very careful during testing to avoid occurrence of an accident.**
- **Road test should be carried out by 2 persons, a driver and a tester.**

1) With ignition switch turned OFF, connect scan tool.
2) Turn ON ignition switch and clear DTC using scan tool.
3) Warm up engine to normal operating temperature.
4) Drive vehicle at 4000 rpm (engine speed) with 3rd gear or “3” range.
5) Release accelerator pedal and with engine brake applied, keep vehicle coasting for 6 sec. or more (fuel cut condition for 5 sec. or more) and stop vehicle.
6) Check pending DTC and DTC.

DTC Troubleshooting

NOTE

Before this troubleshooting is performed, read the precautions for DTC troubleshooting referring to “Precautions for DTC Troubleshooting”.

Step	Action	Yes	No
1	*Was “Engine and Emission Control System Check” performed?*	Go to Step 2.	Go to “Engine and Emission Control System Check”.
2	**Vehicle speed signal check** *Is vehicle speed displayed on scan tool in Step 4) and 5) of “DTC Confirmation Procedure”?*	Intermittent trouble. Check for intermittent referring to “Intermittent and Poor Connection Inspection in Section 00”.	For M/T model, go to Step 3. For A/T model, go to Step 4.
3	**DTC check in ABS control module assembly** 1) Connect scan tool to DLC with ignition switch turned OFF. 2) Check ABS / ESP® control module assembly for DTC. *Is there any DTC(s) in ABS / ESP® control module assembly?*	Go to applicable DTC diag. flow.	Substitute a known-good ECM and recheck.

Step	Action	Yes	No
4	**DTC check in TCM** 1) Connect scan tool to DLC with ignition switch turned OFF. 2) Check TCM for DTC. *Is DTC P0722 detected?*	Go to “DTC P0722: Output Speed Sensor (VSS) Circuit No Signal in Section 5A”.	Substitute a known-good ECM and recheck.

DTC P0532: A/C Refrigerant Pressure Sensor Circuit Low

S7RW0A1104053

Wiring Diagram

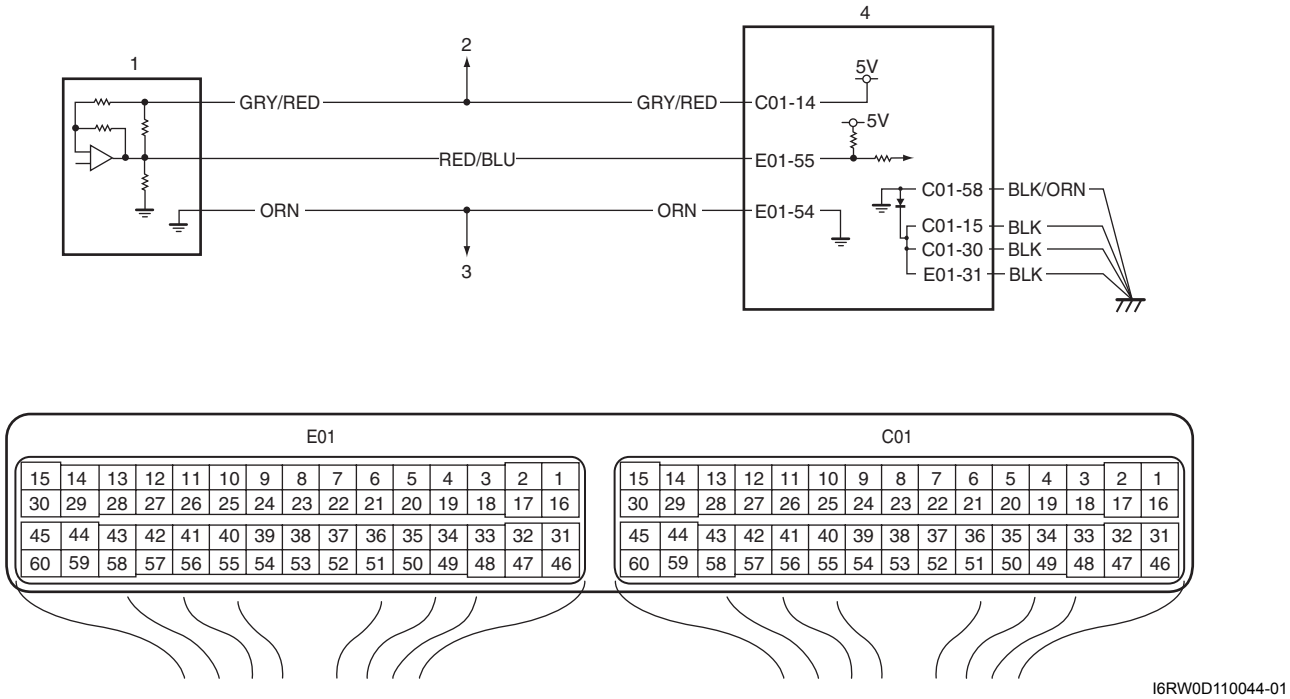

1. A/C refrigerant pressure sensor	2. To MAP sensor	3. To other sensors	4. ECM

DTC Detecting Condition and Trouble Area

DTC detecting condition	Trouble area
A/C refrigerant pressure sensor signal voltage is less than specified value. (1 driving detection logic but MIL does not light up)	• A/C refrigerant pressure sensor circuit • A/C refrigerant pressure sensor • MAP sensor • ECM

DTC Confirmation Procedure

1) Connect scan tool to DLC with ignition switch turned OFF.
2) Turn ON ignition switch and clear DTC using scan tool.
3) Start engine and warm up engine to normal operating temperature.
4) Run engine at idle and turn both A/C switch and heater blower switch ON (turn ON air conditioning) for 3 min. or more.
5) Check DTC and pending DTC.

Troubleshooting

NOTE

Before this troubleshooting is performed, read the precautions for DTC troubleshooting referring to “Precautions for DTC Troubleshooting”.

Step	Action	Yes	No
1	*Was "Engine and Emission Control System Check" performed?*	Go to Step 2.	Go to "Engine and Emission Control System Check".
2	**A/C refrigerant pressure sensor power supply circuit check** 1) Disconnect connector from A/C refrigerant pressure sensor with ignition switch turned OFF. 2) Check for proper connection of A/C refrigerant pressure sensor at "GRY/RED", "RED/BLU" and "ORN" wire terminals. 3) Turn ON ignition switch, measure voltage between engine ground and "GRY/RED" wire terminal of A/C refrigerant pressure sensor connector. *Is voltage 4 – 6 V?*	Go to Step 5.	Go to Step 3.
3	**A/C refrigerant pressure sensor power supply circuit check** 1) Disconnect connectors from MAP sensor with ignition switch turned OFF. 2) Turn ON ignition switch, measure voltage between engine ground and "GRY/RED" wire terminal of A/C refrigerant pressure sensor connector. *Is voltage 4 – 6 V?*	Faulty MAP sensor.	Go to Step 4.
4	**A/C refrigerant pressure sensor power supply circuit check** 1) Disconnect connectors from ECM with ignition switch turned OFF. 2) Measure resistance between engine ground and "C01-14" terminal of ECM connector. *Is resistance infinity?*	Go to Step 6.	"GRY/RED" wire is shorted to ground circuit.
5	**A/C refrigerant pressure sensor signal circuit check** 1) Connect connectors to ECM. 2) Turn ON ignition switch, measure voltage between engine ground and "RED/BLU" wire terminal of A/C refrigerant pressure sensor connector. *Is voltage 4 – 6 V?*	Go to Step 7.	Go to Step 6.
6	**A/C refrigerant pressure sensor signal circuit check** 1) Disconnect connectors from ECM with ignition switch turned OFF. 2) Measure resistance between engine ground and "E01-55" terminal of ECM connector. *Is resistance infinity?*	Go to Step 7.	"RED/BLU" wire is shorted to ground circuit.
7	**A/C refrigerant pressure sensor check** 1) Check A/C refrigerant pressure sensor referring to "A/C Refrigerant Pressure Sensor and Its Circuit Inspection: Manual Type in Section 7B" or "A/C Refrigerant Pressure Sensor and Its Circuit Inspection: Automatic Type in Section 7B". *Is it in good condition?*	Substitute a known-good ECM and recheck.	Faulty A/C refrigerant pressure sensor.

DTC P0533: A/C Refrigerant Pressure Sensor Circuit High

S7RW0A1104054

Wiring Diagram

Refer to “DTC P0532: A/C Refrigerant Pressure Sensor Circuit Low”.

DTC Detecting Condition and Trouble Area

DTC detecting condition	Trouble area
A/C refrigerant pressure sensor signal voltage is higher than specified value. (1 driving detection logic but MIL does not light up)	• A/C refrigerant pressure sensor circuit • A/C refrigerant pressure sensor • MAP sensor • ECM

DTC Confirmation Procedure

1) Connect scan tool to DLC with ignition switch turned OFF.
2) Turn ON ignition switch and clear DTC using scan tool.
3) Start engine and warm up engine to normal operating temperature.
4) Run engine at idle and turn both A/C switch and heater blower switch ON (turn ON air conditioning) for 3 min. or more.
5) Check DTC and pending DTC.

Troubleshooting

NOTE

Before this troubleshooting is performed, read the precautions for DTC troubleshooting referring to “Precautions for DTC Troubleshooting”.

Step	Action	Yes	No
1	*Was “Engine and Emission Control System Check” performed?*	Go to Step 2.	Go to “Engine and Emission Control System Check”.
2	**A/C refrigerant pressure sensor power supply circuit check** 1) Disconnect connector from A/C refrigerant pressure sensor with ignition switch turned OFF. 2) Check for proper connection of A/C refrigerant pressure sensor at “GRY/RED”, “RED/BLU” and “ORN” wire terminals. 3) Turn ON ignition switch, measure voltage between engine ground and “GRY/RED” wire terminal of A/C refrigerant pressure sensor connector. *Is voltage 4 – 6 V?*	Go to Step 4.	Go to Step 3.
3	**A/C refrigerant pressure sensor power supply circuit check** 1) Disconnect connectors from MAP sensor with ignition switch turned OFF. 2) Turn ON ignition switch, measure voltage between engine ground and “GRY/RED” wire terminal of A/C refrigerant pressure sensor connector. *Is voltage 4 – 6 V?*	Faulty MAP sensor.	“GRY/RED” wire is open or shorted to power circuit.
4	**A/C refrigerant pressure sensor signal circuit check** 1) Turn ON ignition switch, measure voltage between engine ground and “RED/BLU” wire terminal of A/C refrigerant pressure sensor connector. *Is voltage 4 – 6 V?*	Go to Step 6.	Go to Step 5.

Step	Action	Yes	No
5	**A/C refrigerant pressure sensor signal circuit check** 1) Disconnect connectors from ECM with ignition switch turned OFF. 2) Measure resistance between “RED/BLU” wire terminal of A/C refrigerant pressure sensor connector and “E01-55” terminal of ECM connector. *Is resistance below 2 Ω?*	“RED/BLU” wire is shorted to power supply circuit.	“RED/BLU” wire is open or high resistance circuit.
6	**A/C refrigerant pressure sensor ground circuit check** 1) Turn OFF ignition switch, measure resistance between engine ground and “ORN” wire terminal of A/C refrigerant pressure sensor connector. *Is resistance below 5 Ω?*	Go to Step 8.	Go to Step 7.
7	**ECM ground circuit check** 1) Remove ECM from its bracket with ECM connectors connected. 2) Measure resistance between engine ground and “E01-54” terminal of ECM connector. *Is resistance below 5 Ω?*	“ORN” wire is open or high resistance circuit.	ECM grounds “C01-58”, “C01-15”, “C01-30” and/or “E01-31” is open or high resistance circuit.
8	**A/C refrigerant pressure sensor check** 1) Check A/C refrigerant pressure sensor referring to “A/C Refrigerant Pressure Sensor and Its Circuit Inspection: Manual Type in Section 7B” or “A/C Refrigerant Pressure Sensor and Its Circuit Inspection: Automatic Type in Section 7B”. *Is it good condition?*	Substitute a known-good ECM and recheck.	Faulty A/C refrigerant pressure sensor.

DTC P0601 / P0602 / P0607: Internal Control Module Memory Check Sum Error / Control Module Programming Error / Control Module Performance

S7RW0A1104055

System Description

Internal control module is installed in ECM.

DTC Detecting Condition and Trouble Area

DTC detecting condition	Trouble area
DTC P0601: Data write error or check sum error (1 driving cycle detection logic) **DTC P0602:** Data programming error (1 driving cycle detection logic but MIL does not light up) **DTC P0607:** Data programming error (1 driving cycle detection logic)	ECM

DTC Confirmation Procedure

1) Connect scan tool to DLC with ignition switch turned OFF.
2) Turn ON ignition switch and clear DTC, pending DTC and freeze frame data by using scan tool.
3) Start engine and run it at idle if possible.
4) Check DTC and pending DTC by using scan tool.

DTC Troubleshooting

NOTE

Before this troubleshooting is performed, read the precautions for DTC troubleshooting referring to "Precautions for DTC Troubleshooting".

Step	Action	Yes	No
1	**DTC recheck** 1) Clear DTC referring to "DTC Clearance". 2) Turn OFF ignition switch. 3) Turn ON ignition switch and check DTC. *Is DTC P0601 or P0607 still indicated?*	Go to Step 2.	Intermittent trouble. Check for intermittent referring to "Intermittent and Poor Connection Inspection in Section 00".
2	**ECM reprogramming check** *Was reprogramming of ECM executed?*	Execute reprogramming of ECM correctly once again.	Go to step 3.
3	**ECM power and ground circuit check** 1) Check that ECM power supply circuit and ECM ground circuit is in good condition referring to "ECM Power and Ground Circuit Check". *Are check results OK?*	Substitute a known-good ECM and recheck.	Repair ECM power or ground circuit.

DTC P0616: Starter Relay Circuit Low

S7RW0A1104056

Wiring Diagram

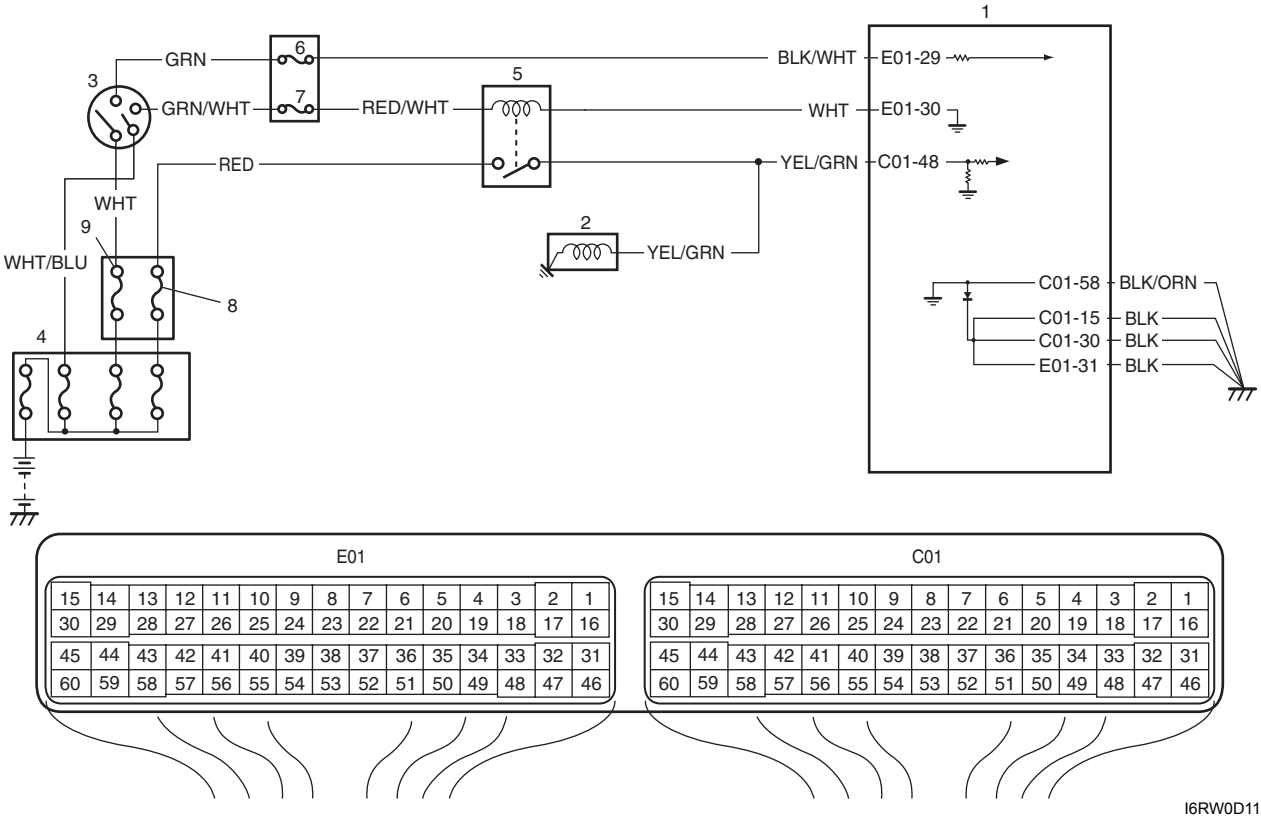

I6RW0D110045-01

1. ECM	4. Main fuse box	7. "ST SIG" fuse
2. Starter motor	5. Starting motor control relay	8. "ST MOT" fuse
3. Ignition switch	6. "IG COIL" fuse	9. "IGN" fuse

DTC Detecting Condition and Trouble Area

DTC detecting condition	Trouble area
Engine starts even though vehicle is at stop and engine starter signal is low voltage. (2 driving cycle detection logic)	• Engine starter signal circuit • ECM

DTC Confirmation Procedure

1) With ignition switch turned OFF, connect scan tool.
2) Turn ON ignition switch and clear DTC using scan tool.
3) Start engine.
4) Check DTC and pending DTC.

DTC Troubleshooting

NOTE

Before this troubleshooting is performed, read the precautions for DTC troubleshooting referring to "Precautions for DTC Troubleshooting".

Step	Action	Yes	No
1	*Was "Engine and Emission Control System Check" performed?*	Go to Step 2.	Go to "Engine and Emission Control System Check".
2	**Signal circuit check** 1) Turn OFF ignition switch. 2) Remove ECM from its bracket with ECM connectors connected. 3) Measure voltage at terminal "C01-48" of ECM connector, under following condition. **Voltage at terminal "C01-48" of ECM connector** **While engine cranking: 6 – 14 V** **After starting engine: 0 – 1 V** *Is each voltage within specified range?*	Poor "C01-48" connection or intermittent trouble. Check for intermittent referring to "Intermittent and Poor Connection Inspection in Section 00". If wire and connections are OK, substitute a known-good ECM and recheck.	"YEL/GRN" wire is open or high resistance circuit.

DTC P0617: Starter Relay Circuit High

S7RW0A1104057

Wiring Diagram

Refer to "DTC P0616: Starter Relay Circuit Low".

DTC Detecting Condition and Trouble Area

DTC detecting condition	Trouble area
Engine starter signal is high voltage for 180 seconds while engine is running. (2 driving cycle detection logic)	• Engine starter signal circuit • ECM

DTC Confirmation Procedure

1) With ignition switch turned OFF, connect scan tool.
2) Turn ON ignition switch and clear DTC using scan tool.
3) Start engine and run it at idle for 3 min. or more.
4) Check DTC and pending DTC.

DTC Troubleshooting

NOTE

Before this troubleshooting is performed, read the precautions for DTC troubleshooting referring to "Precautions for DTC Troubleshooting".

Step	Action	Yes	No
1	*Was "Engine and Emission Control System Check" performed?*	Go to Step 2.	Go to "Engine and Emission Control System Check".
2	**Starter signal check** 1) Turn OFF ignition switch. 2) Remove ECM from its bracket with ECM connectors connected. 3) Start engine, measure voltage between "C01-48" terminal of ECM connector and vehicle body ground. *Is voltage 0 – 1 V?*	Intermittent trouble. Check for intermittent referring to "Intermittent and Poor Connection Inspection in Section 00". If OK, substitute a known-good ECM and recheck.	Go to Step 3.
3	**Wire circuit check** 1) Disconnect starting motor control relay in individual circuit fuse box No.1 with ignition switch turned OFF. 2) Check for proper connection to starting motor control relay at "RED/WHT", "RED", "WHT", and "YEL/GRN" wire terminals. 3) Disconnect connector from starting motor. 4) Measure voltage between "C01-48" terminal of ECM connector and vehicle body ground with ignition switch turned ON. *Is voltage 0 – 1 V?*	Go to Step 4.	"YEL/GRN" wire is shorted to power circuit. If wires are OK, substitute a known-good ECM and recheck.
4	**Wire circuit check** 1) Measure voltage between "RED/WHT" wire terminal of starting motor control relay connector and vehicle body ground with ignition switch turned ON. *Is voltage 0 – 1 V?*	Check starting motor control relay. If OK, substitute a known-good ECM and recheck.	Faulty ignition switch, check ignition switch referring to "Ignition Switch Inspection in Section 9C". If ignition switch is OK, check for short circuit between ignition switch and starting motor control relay to power circuit.

DTC P1510: ECM Back-Up Power Supply Malfunction

S7RW0A1104058

Wiring Diagram

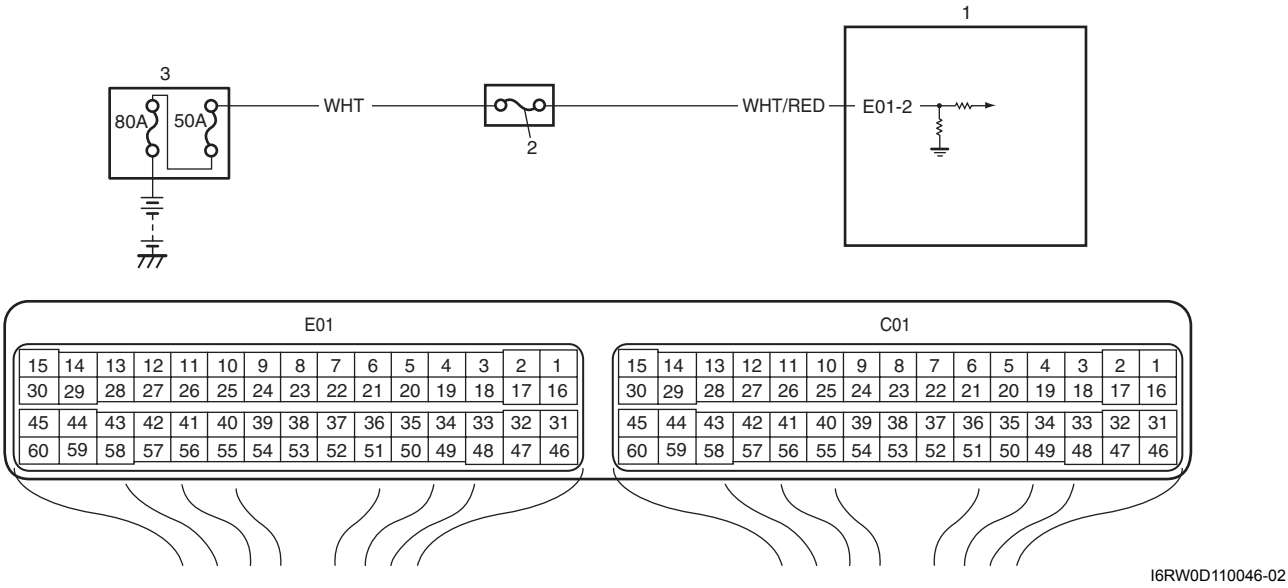

1. ECM	2. “DOME” fuse	3. Main fuse box

Circuit Description

Battery voltage is supplied so that DTC memory, values for engine control learned by ECM, etc. are kept in ECM even when the ignition switch is turned OFF.

DTC Detecting Condition and Trouble Area

DTC detecting condition	Trouble area
Back-up power circuit voltage is less than specified value for 5 seconds while engine is running. (1 driving cycle detection logic)	Battery voltage supply circuit

DTC Confirmation Procedure

1) Connect scan tool to DLC with ignition switch turned OFF.
2) Turn ON ignition switch and clear DTC using scan tool and run engine at idle speed for 1 min.
3) Check DTC and pending DTC.

DTC Troubleshooting

NOTE

Before this troubleshooting is performed, read the precautions for DTC troubleshooting referring to “Precautions for DTC Troubleshooting”.

Step	Action	Yes	No
1	*Was “Engine and Emission Control System Check” performed?*	Go to Step 2.	Go to “Engine and Emission Control System Check”.

Step	Action	Yes	No
2	**Battery voltage supply circuit check** 1) Turn OFF ignition switch. 2) Remove ECM from its bracket with ECM connectors connected. 3) With engine running, measure voltage between “E01-2” terminal of ECM connector and engine ground. *Is voltage 10 – 14 V?*	Poor “E01-2” connection or intermittent trouble. Check for intermittent referring to “Intermittent and Poor Connection Inspection in Section 00”. If wire and connections are OK, substitute a known-good ECM and recheck.	“DOME” fuse blown, “WHT” or “WHT/RED” wire is circuit open or short circuit.

DTC P2101: Throttle Actuator Control Motor Circuit Range / Performance

S7RW0A1104059

Wiring Diagram

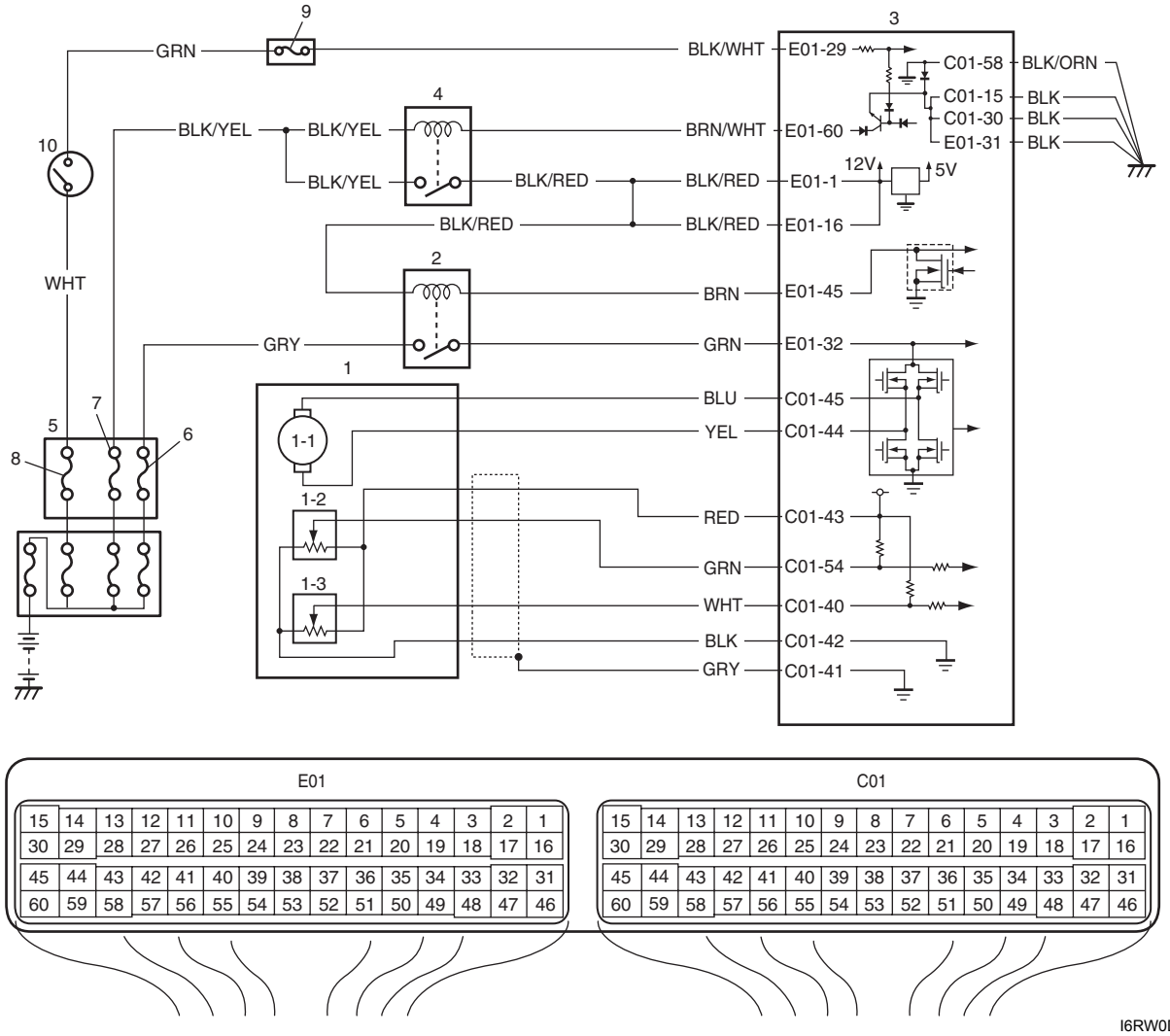

I6RW0D110047-01

1. Electric throttle body assembly	3. ECM	8. “IGN” fuse
1-1. Throttle actuator	4. Main relay	9. “IG COIL” fuse
1-2. Throttle position sensor (main)	5. Individual circuit fuse box No.1	10. Ignition switch
1-3. Throttle position sensor (sub)	6. “THR MOT” fuse	
2. Throttle actuator control relay	7. “FI” fuse	

DTC Detecting Condition and Trouble Area

DTC detecting condition	Trouble area
Monitor signal of throttle actuator output (duty output) is inconsistent with throttle actuator control command. (1 driving detection logic)	• Throttle actuator circuit • Electric throttle body assembly • ECM

DTC Confirmation Procedure

1) With ignition switch turned OFF, connect scan tool.
2) Turn ON ignition switch and clear DTC using scan tool.
3) Keep the accelerator pedal at idle position for 2 seconds.
4) Keep the accelerator pedal at fully depressed position for 2 seconds.
5) Repeat Step 3) and 4) for 3 times.
6) Check DTC.

DTC Troubleshooting

NOTE

Before this troubleshooting is performed, read the precautions for DTC troubleshooting referring to "Precautions for DTC Troubleshooting".

Step	Action	Yes	No
1	*Was "Engine and Emission Control System Check" performed?*	Go to Step 2.	Go to "Engine and Emission Control System Check".
2	**Throttle actuator circuit check** 1) Disconnect connectors from electric throttle body assembly and ECM with ignition switch turned OFF. 2) Check for proper connection of electric throttle body assembly and ECM connectors at "BLU" wire, "YEL" wire, "C01-45" and "C01-44" terminals. 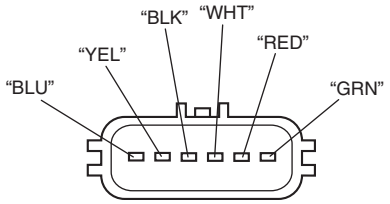 I5RW0C110016-01 3) Turn ON ignition switch. 4) Measure voltage between "BLU" wire terminal of electric throttle body assembly connector and engine ground, between "YEL" wire terminal of electric throttle body assembly connector and engine ground. *Is voltage 0 V?*	Go to Step 3.	"BLU" wire and/or "YEL" wire is shorted to power circuit.
3	**Throttle actuator circuit check** 1) Turn OFF ignition switch. 2) Measure resistance between "BLU" wire terminal of electric throttle body assembly connector and engine ground, between "YEL" wire terminal of electric throttle body assembly connector and engine ground. *Is resistance infinity?*	Go to Step 4.	"BLU" wire and/or "YEL" wire is shorted to ground circuit.

Step	Action	Yes	No
4	**Throttle actuator circuit check** 1) Check throttle actuator referring to “Throttle Actuator Performance Check” under “Electric Throttle Body Assembly On-Vehicle Inspection in Section 1C”. *Is check result satisfactory?*	Substitute a known-good ECM and recheck.	Replace electric throttle body assembly.

DTC P2102: Throttle Actuator Control Motor Circuit Low

S7RW0A1104060

Wiring Diagram

Refer to “DTC P2101: Throttle Actuator Control Motor Circuit Range / Performance”.

DTC Detecting Condition and Trouble Area

DTC detecting condition	Trouble area
Power supply voltage of throttle actuator control circuit is lower than specified value for specified time even if throttle actuator control relay is turned on. (1 driving detection logic)	• Throttle actuator control relay circuit • Throttle actuator control relay • ECM

DTC Confirmation Procedure

1) With ignition switch turned OFF, connect scan tool.
2) Turn ON ignition switch and clear DTC using scan tool.
3) Start engine and run it for 1 min. or more.
4) Check DTC.

DTC Troubleshooting

NOTE

Before this troubleshooting is performed, read the precautions for DTC troubleshooting referring to “Precautions for DTC Troubleshooting”.

Step	Action	Yes	No
1	*Was “Engine and Emission Control System Check” performed?*	Go to Step 2.	Go to “Engine and Emission Control System Check”.
2	**Throttle actuator control relay circuit check** 1) Remove ECM from its bracket with ECM connectors connected. 2) Check for proper connection of ECM connector at “E01-45” and “E01-32” terminals. 3) Turn ON ignition switch. 4) Measure voltage between “E01-32” terminal of ECM connector and engine ground. *Is voltage 10 – 14 V?*	Intermittent trouble. Check for intermittent referring to “Intermittent and Poor Connection Inspection in Section 00”.	Go to Step 3.
3	*Is “THR MOT” fuse in good condition?*	Go to Step 4.	Replace fuse and check for short in circuits connected to this fuse.

Step	Action	Yes	No
4	**Throttle actuator control relay circuit check** 1) Remove throttle actuator control relay from individual circuit fuse box No.1 with ignition switch turned OFF. 2) Check for proper connection to throttle actuator control relay at “BLK/RED”, “GRY”, “BRN” and “GRN” wire terminals. 3) Measure voltage between engine ground and each “BLK/RED”, “GRY” wire terminal with ignition switch turned ON. *Is each voltage 10 – 14 V?*	Go to Step 5.	“BLK/RED” wire and/or “GRY” wire is open or high resistance.
5	**Throttle actuator control relay circuit check** 1) Disconnect connectors from ECM with ignition switch turned OFF. 2) Measure resistance at following connector terminals. • Between “BRN” wire terminal of throttle actuator control relay connector and “E01-45” terminal of ECM connector • Between “GRN” wire terminal of throttle actuator control relay connector and “E01-32” terminal of ECM connector *Is each resistance below 5 Ω?*	Go to Step 6.	“BRN” wire and/or “GRN” wire is open or high resistance.
6	**Throttle actuator control relay check** 1) Check throttle actuator control relay referring to “Main Relay, Fuel Pump Relay, Starting Motor Control Relay, Throttle Actuator Control Relay and Radiator Cooling Fan Relay Inspection in Section 1C”. *Is it in good condition?*	Substitute a known-good ECM and recheck.	Replace throttle actuator control relay.

DTC P2103: Throttle Actuator Control Motor Circuit High

S7RW0A1104061

Wiring Diagram

Refer to “DTC P2101: Throttle Actuator Control Motor Circuit Range / Performance”.

DTC Detecting Condition and Trouble Area

DTC detecting condition	Trouble area
Power supply voltage of throttle actuator control circuit is higher than specified value for specified time even if throttle actuator control relay is turned off. (1 driving detection logic)	• Throttle actuator control relay circuit • Throttle actuator control relay • ECM

DTC Confirmation Procedure

1) With ignition switch turned OFF, connect scan tool.
2) Turn ON ignition switch and clear DTC using scan tool.
3) Ignition switch turned OFF for 20 sec. or more.
4) Turn ON ignition switch and check DTC.

DTC Troubleshooting

NOTE

Before this troubleshooting is performed, read the precautions for DTC troubleshooting referring to "Precautions for DTC Troubleshooting".

Step	Action	Yes	No
1	*Was "Engine and Emission Control System Check" performed?*	Go to Step 2.	Go to "Engine and Emission Control System Check".
2	**Throttle actuator control relay circuit check** 1) Remove throttle actuator control relay from individual circuit fuse box No.1 with ignition switch turned OFF. 2) Check for proper connection to throttle actuator control relay at "BLK/RED", "GRY", "BRN" and "GRN" wire terminals. 3) Turn ON ignition switch. 4) Measure voltage between engine ground and "E01-32" terminal of ECM connector. *Is voltage 0 V?*	Go to Step 3.	"GRN" wire is shorted to other circuit.
3	**Throttle actuator control relay circuit check** 1) Disconnect connectors from ECM with ignition switch turned OFF. 2) Measure resistance between engine ground and "E01-45" terminal of ECM connector. *Is resistance infinity?*	Go to Step 4.	"BRN" wire is shorted to ground circuit.
4	**Throttle actuator control relay check** 1) Check throttle actuator control relay referring to "Main Relay, Fuel Pump Relay, Starting Motor Control Relay, Throttle Actuator Control Relay and Radiator Cooling Fan Relay Inspection in Section 1C". *Is it in good condition?*	Substitute a known-good ECM and recheck.	Replace throttle actuator control relay.

DTC P2111: Throttle Actuator Control System - Stuck Open

S7RW0A1104062

Wiring Diagram

Refer to "DTC P2101: Throttle Actuator Control Motor Circuit Range / Performance".

DTC Detecting Condition and Trouble Area

DTC detecting condition	Trouble area
Throttle position does not change by specified value during diagnosing throttle valve at ignition switch turned OFF. (1 driving detection logic)	• Electric throttle body assembly • ECM

DTC Confirmation Procedure

1) With ignition switch turned OFF, connect scan tool.
2) Turn ON ignition switch and clear DTC using scan tool.
3) Ignition switch turned OFF for 20 sec. or more.
4) Turn ON ignition switch and check DTC.

DTC Troubleshooting

NOTE

Before this troubleshooting is performed, read the precautions for DTC troubleshooting referring to "Precautions for DTC Troubleshooting".

Step	Action	Yes	No
1	*Was "Engine and Emission Control System Check" performed?*	Go to Step 2.	Go to "Engine and Emission Control System Check".
2	**Throttle valve visual check** 1) Check that there isn't any foreign matter caught between throttle valve and throttle body housing referring to "Throttle Valve Visual Check" under "Electric Throttle Body Assembly On-Vehicle Inspection in Section 1C". *Is it in good condition?*	Go to Step 3.	Take it out after removing throttle body and clean inside of throttle body thoroughly.
3	**Throttle valve operation check** 1) Check operation of throttle valve referring to "Throttle Valve Operation Check" under "Electric Throttle Body Assembly On-Vehicle Inspection in Section 1C". *Is check result satisfactory?*	Go to Step 4.	Replace electric throttle body assembly.
4	**Throttle actuator operation check** 1) Check operation of throttle actuator referring to "Throttle Actuator Operation Check" under "Electric Throttle Body Assembly On-Vehicle Inspection in Section 1C". *Is check result satisfactory?*	Go to Step 5.	Replace electric throttle body assembly.
5	**Throttle position sensor performance check** 1) Check performance of throttle position sensor referring to "Throttle Position Sensor Performance Check" under "Electric Throttle Body Assembly On-Vehicle Inspection in Section 1C". *Is check result satisfactory?*	Substitute a known-good ECM and recheck.	Replace electric throttle body assembly.

DTC P2119: Throttle Actuator Control Throttle Body Range / Performance

S7RW0A1104063

Wiring Diagram

Refer to "DTC P2101: Throttle Actuator Control Motor Circuit Range / Performance".

DTC Detecting Condition and Trouble Area

DTC detecting condition	Trouble area
Difference between the measured (actual) throttle valve opening angle and the target throttle valve opening angle which is calculated based on accelerator pedal opening angle and engine condition is more than specification for specified time. (1 driving detection logic)	• Throttle actuator circuit • Electric throttle body assembly • ECM

DTC Confirmation Procedure

1) With ignition switch turned OFF, connect scan tool.
2) Turn ON ignition switch and clear DTC using scan tool.
3) Keep the accelerator pedal at idle position for 2 seconds.
4) Keep the accelerator pedal at fully depressed position for 2 seconds.
5) Repeat Step 3) and 4) for 3 times.
6) Check DTC.

DTC Troubleshooting

NOTE

Before this troubleshooting is performed, read the precautions for DTC troubleshooting referring to "Precautions for DTC Troubleshooting".

Step	Action	Yes	No
1	*Was "Engine and Emission Control System Check" performed?*	Go to Step 2.	Go to "Engine and Emission Control System Check".
2	**Electric throttle body assembly system check** 1) Connect scan tool to DLC with ignition switch turned OFF. 2) Turn ON ignition switch, check each voltage of "TP Sensor 1 Volt" and "TP Sensor 2 Volt" displayed on scan tool when accelerator pedal is idle position and fully depressed. *Is displayed each TP sensor value as described voltage in "Scan Tool Data"?*	Intermittent trouble. Check for intermittent referring to "Intermittent and Poor Connection Inspection in Section 00".	Go to Step 3.
3	**Throttle actuator circuit check** 1) Disconnect connector from electric throttle body assembly with ignition switch turned OFF. 2) Check for proper connection to electric throttle body assembly at "BLU" and "YEL" wire terminals. 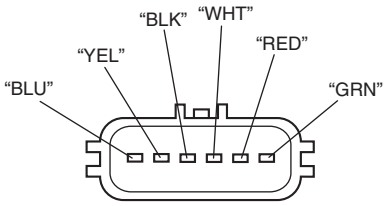 I5RW0C110016-01 3) Disconnect connectors from ECM. 4) Check for proper connection to ECM at "C01-45" and "C01-44" terminals. 5) Measure resistance at following connector terminals. • Between "BLU" wire terminal of electric throttle body assembly connector and "C01-45" terminal of ECM connector • Between "YEL" wire terminal of electric throttle body assembly connector and "C01-44" terminal of ECM connector *Is each resistance below 5 Ω?*	Go to Step 4.	"BLU" wire and/or "YEL" wire is open or high resistance.
4	**Electric throttle body assembly check** 1) Check electric throttle body assembly referring to "Electric Throttle Body Assembly and Its Circuit Check" under "Electric Throttle Body Assembly On-Vehicle Inspection in Section 1C". *Is check result satisfactory?*	Substitute a known-good ECM and recheck.	Replace electric throttle body assembly.

DTC P2122: Pedal Position Sensor (Main) Circuit Low Input

S7RW0A1104064

Wiring Diagram

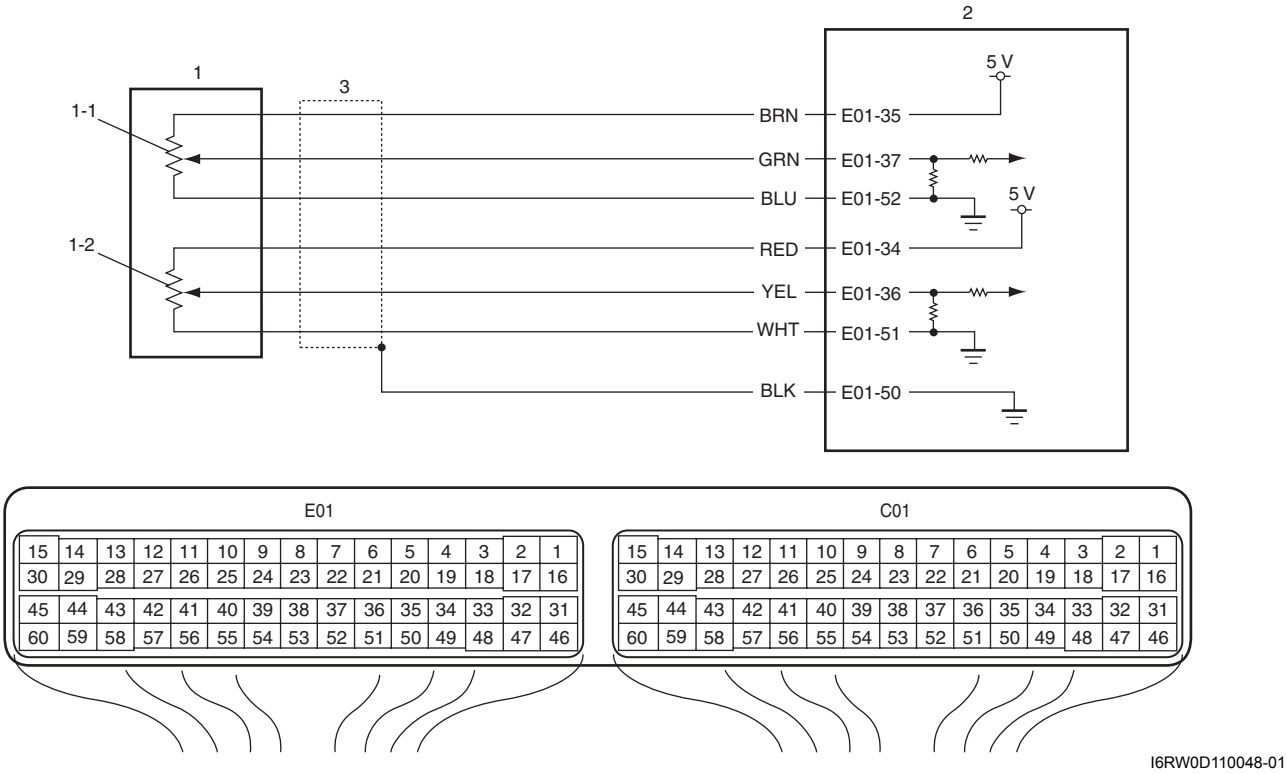

1. APP sensor assembly	1-2. APP sensor (sub)	3. Ground of APP sensor for shield wire
1-1. APP sensor (main)	2. ECM	

DTC Detecting Condition and Trouble Area

DTC detecting condition	Trouble area
Output voltage of APP sensor (main) is lower than specified value. (1 driving detection logic)	• APP sensor (main) circuit • APP sensor assembly • ECM • Incorrect mounting of APP sensor assembly

DTC Confirmation Procedure

1) With ignition switch turned OFF, connect scan tool.
2) Turn ON ignition switch and clear DTC using scan tool.
3) Keep the accelerator pedal at idle position for 2 seconds.
4) Keep the accelerator pedal at fully depressed position for 2 seconds.
5) Repeat Step 3) and 4) for 3 times.
6) Check DTC.

DTC Troubleshooting

NOTE

Before this troubleshooting is performed, read the precautions for DTC troubleshooting referring to "Precautions for DTC Troubleshooting".

Step	Action	Yes	No
1	*Was "Engine and Emission Control System Check" performed?*	Go to Step 2.	Go to "Engine and Emission Control System Check".
2	**APP sensor assembly mounting check** 1) Check that APP sensor assembly has been mounted to vehicle body properly (no pinched floor carpet, etc.). *Is it OK?*	Go to Step 3.	Reinstall APP sensor assembly properly referring to "Accelerator Pedal Position (APP) Sensor Assembly Removal and Installation in Section 1C".
3	**APP sensor (main) and its circuit check** 1) Connect scan tool to DLC with ignition switch turned OFF. 2) Turn ON ignition switch, check "APP Sensor 1 Volt" displayed on scan tool. *Is displayed voltage below 0.167 V?*	Go to Step 4.	Intermittent trouble. Check for intermittent referring to "Intermittent and Poor Connection Inspection in Section 00".
4	**ECM voltage check** 1) Disconnect connector from APP sensor assembly with ignition switch turned OFF. 2) Check for proper connection to APP sensor assembly at "BRN", "GRN" and "BLU" wire terminals. 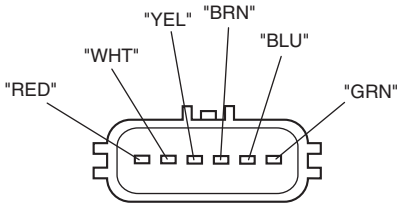 I4RS0B110048-01 3) If OK, measure voltage between "BRN" wire terminal of APP sensor assembly connector and vehicle body ground with ignition switch turned ON. *Is voltage 4 – 6 V?*	Go to Step 7.	Go to Step 5.
5	**ECM voltage check** 1) Turn OFF ignition switch. 2) Remove ECM from its bracket with ECM connectors connected. 3) Check for proper connection of ECM connector at "E01-35" terminal. 4) If OK, measure voltage between "E01-35" terminal of ECM connector and engine ground with ignition switch turned ON. *Is voltage 4 – 6 V?*	"BRN" wire is open or high resistance circuit.	Go to Step 6.

Step	Action	Yes	No
6	**Wire harness check** 1) Disconnect connectors from ECM with ignition switch turned OFF. 2) Measure resistance between “E01-35” terminal of ECM connector and engine ground. *Is resistance infinity?*	Substitute a known-good ECM and recheck.	“BRN” wire is shorted to ground circuit.
7	**Wire harness check** 1) Disconnect connectors from ECM with ignition switch turned OFF. 2) Check for proper connection of ECM connector at “E01-37”, “E01-52” and “E01-51” terminals. 3) If OK, measure resistance between “GRN” wire terminal of APP sensor assembly connector and vehicle body ground. *Is resistance infinity?*	Go to Step 8.	“GRN” wire is shorted to ground circuit.
8	**Wire harness check** 1) Measure resistance between “E01-37” and each “E01-52”, “E01-51”, “E01-50” terminals of ECM connector with ignition switch turned OFF. *Is each resistance infinity?*	Go to Step 9.	“GRN” wire is shorted to “BLU” wire and/or “WHT” wire and/or “E01-50” circuit.
9	**Wire harness check** 1) Measure resistance between “GRN” wire terminal of APP sensor assembly connector and “E01-37” terminal of ECM connector with ignition switch turned OFF. *Is resistance below 5 Ω?*	Go to Step 10.	“GRN” wire is open or high resistance circuit.
10	**APP sensor assembly check** 1) Check APP sensor (main) referring to “Accelerator Pedal Position (APP) Sensor Assembly Inspection in Section 1C”. *Is output voltage within specified value?*	Substitute a known-good ECM and recheck.	Replace APP sensor assembly.

DTC P2123: Pedal Position Sensor (Main) Circuit High Input

S7RW0A1104065

Wiring Diagram

Refer to “DTC P2122: Pedal Position Sensor (Main) Circuit Low Input”.

DTC Detecting Condition and Trouble Area

DTC detecting condition	Trouble area
Output voltage of APP sensor (main) is higher than specified value. (1 driving detection logic)	• APP sensor (main) circuit • APP sensor assembly • ECM • Incorrect mounting of APP sensor assembly

DTC Confirmation Procedure

1) With ignition switch turned OFF, connect scan tool.
2) Turn ON ignition switch and clear DTC using scan tool.
3) Keep the accelerator pedal at idle position for 2 seconds.
4) Keep the accelerator pedal at fully depressed position for 2 seconds.
5) Repeat Step 3) and 4) for 3 times.
6) Check DTC.

DTC Troubleshooting

NOTE

Before this troubleshooting is performed, read the precautions for DTC troubleshooting referring to "Precautions for DTC Troubleshooting".

Step	Action	Yes	No
1	*Was "Engine and Emission Control System Check" performed?*	Go to Step 2.	Go to "Engine and Emission Control System Check".
2	**APP sensor assembly mounting check** 1) Check that APP sensor assembly has been mounted to vehicle body properly (no pinched floor carpet, etc.). *Is it OK?*	Go to Step 3.	Reinstall APP sensor assembly properly referring to "Accelerator Pedal Position (APP) Sensor Assembly Removal and Installation in Section 1C".
3	**APP sensor (main) and its circuit check** 1) Connect scan tool to DLC with ignition switch turned OFF. 2) Turn ON ignition switch, check "APP Sensor 1 Volt" displayed on scan tool. *Is displayed voltage 4.76 V or more?*	Go to Step 4.	Intermittent trouble. Check for intermittent referring to "Intermittent and Poor Connection Inspection in Section 00".
4	**ECM voltage check** 1) Disconnect connector from APP sensor assembly with ignition switch turned OFF. 2) Check for proper connection to APP sensor assembly at "BRN", "GRN" and "BLU" wire terminals. 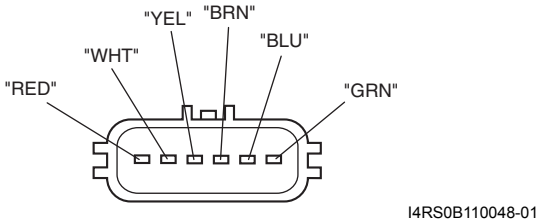 3) If OK, measure voltage between "BRN" wire terminal of APP sensor assembly connector and vehicle body ground with ignition switch turned ON. *Is voltage 4 – 6 V?*	Go to Step 6.	Go to Step 5.
5	**Wire harness check** 1) Disconnect connectors from ECM with ignition switch turned OFF. 2) Check for proper connection of ECM connector at "E01-35" terminal. 3) If OK, measure voltage between "E01-35" terminal of ECM connector and engine ground with ignition switch turned ON. *Is voltage 0 V?*	Substitute a known-good ECM and recheck.	"BRN" wire is shorted to power circuit.

Step	Action	Yes	No
6	**Wire harness check** 1) Disconnect connectors from ECM with ignition switch turned OFF. 2) Check for proper connection of ECM connector at “E01-35”, “E01-37” and “E01-34” terminals. 3) If OK, measure resistance between “GRN” wire terminal and each “BRN”, “RED” wire terminals of APP sensor assembly connector. *Is each resistance infinity?*	Go to Step 7.	“GRN” wire is shorted to “BRN” wire and/or “RED” wire.
7	**Wire harness check** 1) Turn ON ignition switch. 2) Measure voltage between “E01-37” terminal of ECM connector and engine ground. *Is voltage 0 V?*	Go to Step 8.	“GRN” wire is shorted to power circuit.
8	**Ground circuit check** 1) Connect connectors to ECM with ignition switch turned OFF. 2) Measure resistance between “BLU” wire terminal of APP sensor assembly connector and vehicle body ground. *Is resistance below 5 Ω?*	Go to Step 10.	Go to Step 9.
9	**Ground circuit check** 1) Remove ECM from its bracket with ECM connectors connected. 2) Check for proper connection of ECM connector at “E01-52” terminal. 3) If OK, measure resistance between “E01-52” terminal of ECM connector and engine ground. *Is resistance below 5 Ω?*	“BLU” wire is open or high resistance circuit.	Faulty ECM ground circuit. If circuit is OK, substitute a known-good ECM and recheck.
10	**APP sensor assembly check** 1) Check APP sensor (main) referring to “Accelerator Pedal Position (APP) Sensor Assembly Inspection in Section 1C”. *Is output voltage within specified value?*	Substitute a known-good ECM and recheck.	Replace APP sensor assembly.

DTC P2127: Pedal Position Sensor (Sub) Circuit Low Input

S7RW0A1104066

Wiring Diagram

Refer to “DTC P2122: Pedal Position Sensor (Main) Circuit Low Input”.

DTC Detecting Condition and Trouble Area

DTC detecting condition	Trouble area
Output voltage of APP sensor (sub) is lower than specified value. (1 driving detection logic)	• APP sensor (sub) circuit • APP sensor assembly • ECM • Incorrect mounting of APP sensor assembly

DTC Confirmation Procedure

1) With ignition switch turned OFF, connect scan tool.
2) Turn ON ignition switch and clear DTC using scan tool.
3) Keep the accelerator pedal at idle position for 2 seconds.
4) Keep the accelerator pedal at fully depressed position for 2 seconds.
5) Repeat Step 3) and 4) for 3 times.
6) Check DTC.

DTC Troubleshooting

NOTE

Before this troubleshooting is performed, read the precautions for DTC troubleshooting referring to "Precautions for DTC Troubleshooting".

Step	Action	Yes	No
1	*Was "Engine and Emission Control System Check" performed?*	Go to Step 2.	Go to "Engine and Emission Control System Check".
2	**APP sensor assembly mounting check** 1) Check that APP sensor assembly has been mounted to vehicle body properly (no pinched floor carpet, etc.). *Is it OK?*	Go to Step 3.	Reinstall APP sensor assembly properly referring to "Accelerator Pedal Position (APP) Sensor Assembly Removal and Installation in Section 1C".
3	**APP sensor (sub) and its circuit check** 1) Connect scan tool to DLC with ignition switch turned OFF. 2) Turn ON ignition switch, check "APP Sensor 2 Volt" displayed on scan tool. *Is displayed voltage below 0.179 V?*	Go to Step 4.	Intermittent trouble. Check for intermittent referring to "Intermittent and Poor Connection Inspection in Section 00".
4	**ECM voltage check** 1) Disconnect connector from APP sensor assembly with ignition switch turned OFF. 2) Check for proper connection to APP sensor assembly at "RED", "YEL" and "WHT" wire terminals. 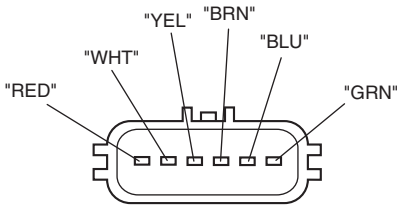 I4RS0B110048-01 3) If OK, measure voltage between "RED" wire terminal of APP sensor assembly connector and vehicle body ground with ignition switch turned ON. *Is voltage 4 – 6 V?*	Go to Step 7.	Go to Step 5.

Step	Action	Yes	No
5	**ECM voltage check** 1) Turn OFF ignition switch. 2) Remove ECM from its bracket with ECM connectors connected. 3) Check for proper connection of ECM connector at “E01-34” terminal. 4) If OK, measure voltage between “E01-34” terminal of ECM connector and engine ground with ignition switch turned ON. *Is voltage 4 – 6 V?*	“RED” wire is open or high resistance circuit.	Go to Step 6.
6	**Wire harness check** 1) Disconnect connectors from ECM with ignition switch turned OFF. 2) Measure resistance between “E01-34” terminal of ECM connector and engine ground. *Is resistance infinity?*	Substitute a known-good ECM and recheck.	“RED” wire is shorted to ground circuit.
7	**Wire harness check** 1) Disconnect connectors from ECM with ignition switch turned OFF. 2) Check for proper connection of ECM connector at “E01-36”, “E01-52” and “E01-51” terminals. 3) If OK, measure resistance between “YEL” wire terminal of APP sensor assembly connector and vehicle body ground. *Is resistance infinity?*	Go to Step 8.	“YEL” wire is shorted to ground circuit.
8	**Wire harness check** 1) Measure resistance between “E01-36” and each “E01-52”, “E01-51”, “E01-50” terminals of ECM connector with ignition switch turned OFF. *Is each resistance infinity?*	Go to Step 9.	“YEL” wire is shorted to “BLU” wire and/or “WHT” wire and/or “E01-50” circuit.
9	**Wire harness check** 1) Measure resistance between “YEL” wire terminal of APP sensor assembly connector and “E01-36” terminal of ECM connector with ignition switch turned OFF. *Is resistance below 5 Ω?*	Go to Step 10.	“YEL” wire is open or high resistance circuit.
10	**APP sensor assembly check** 1) Check APP sensor (sub) referring to “Accelerator Pedal Position (APP) Sensor Assembly Inspection in Section 1C”. *Is output voltage within specified value?*	Substitute a known-good ECM and recheck.	Replace APP sensor assembly.

DTC P2128: Pedal Position Sensor (Sub) Circuit High Input

S7RW0A1104067

Wiring Diagram

Refer to “DTC P2122: Pedal Position Sensor (Main) Circuit Low Input”.

DTC Detecting Condition and Trouble Area

DTC detecting condition	Trouble area
Output voltage of APP sensor (sub) is higher than specified value. (1 driving detection logic)	• APP sensor (sub) circuit • APP sensor assembly • ECM • Incorrect mounting of APP sensor assembly

DTC Confirmation Procedure

1) With ignition switch turned OFF, connect scan tool.
2) Turn ON ignition switch and clear DTC using scan tool.
3) Keep the accelerator pedal at idle position for 2 seconds.
4) Keep the accelerator pedal at fully depressed position for 2 seconds.
5) Repeat Step 3) and 4) for 3 times.
6) Check DTC.

DTC Troubleshooting

NOTE

Before this troubleshooting is performed, read the precautions for DTC troubleshooting referring to “Precautions for DTC Troubleshooting”.

Step	Action	Yes	No
1	*Was “Engine and Emission Control System Check” performed?*	Go to Step 2.	Go to “Engine and Emission Control System Check”.
2	**APP sensor assembly mounting check** 1) Check that APP sensor assembly has been mounted to vehicle body properly (no pinched floor carpet, etc.). *Is it OK?*	Go to Step 3.	Reinstall APP sensor assembly properly referring to “Accelerator Pedal Position (APP) Sensor Assembly Removal and Installation in Section 1C”.
3	**APP sensor (sub) and its circuit check** 1) Connect scan tool to DLC with ignition switch turned OFF. 2) Turn ON ignition switch, check “APP Sensor 2 Volt” displayed on scan tool. *Is displayed voltage 4.76 V or more?*	Go to Step 4.	Intermittent trouble. Check for intermittent referring to “Intermittent and Poor Connection Inspection in Section 00”.

Step	Action	Yes	No
4	**ECM voltage check** 1) Disconnect connector from APP sensor assembly with ignition switch turned OFF. 2) Check for proper connection to APP sensor assembly at “RED”, “YEL” and “WHT” wire terminals. 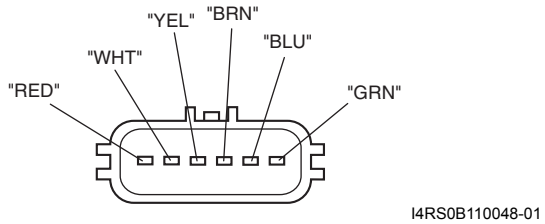 3) If OK, measure voltage between “RED” wire terminal of APP sensor assembly connector and vehicle body ground with ignition switch turned ON. *Is voltage 4 – 6 V?*	Go to Step 6.	Go to Step 5.
5	**Wire harness check** 1) Disconnect connectors from ECM with ignition switch turned OFF. 2) Check for proper connection of ECM connector at “E01-34” terminal. 3) If OK, measure voltage between “E01-34” terminal of ECM connector and engine ground with ignition switch turned ON. *Is voltage 0 V?*	Substitute a known-good ECM and recheck.	“RED” wire is shorted to power circuit.
6	**Wire harness check** 1) Disconnect connectors from ECM with ignition switch turned OFF. 2) Check for proper connection of ECM connector at “E01-35”, “E01-36” and “E01-34” terminals. 3) If OK, measure resistance between “YEL” wire terminal and each “BRN”, “RED” wire terminals of APP sensor assembly connector. *Is each resistance infinity?*	Go to Step 7.	“YEL” wire is shorted to “BRN” wire and/or “RED” wire.
7	**Wire harness check** 1) Turn ON ignition switch. 2) Measure voltage between “E01-36” terminal of ECM connector and engine ground. *Is voltage 0 V?*	Go to Step 8.	“YEL” wire is shorted to power circuit.
8	**Ground circuit check** 1) Connect connectors to ECM with ignition switch turned OFF. 2) Measure resistance between “WHT” wire terminal of APP sensor assembly connector and vehicle body ground. *Is resistance below 5 Ω?*	Go to Step 10.	Go to Step 9.

Step	Action	Yes	No
9	**Ground circuit check** 1) Remove ECM from its bracket with ECM connectors connected. 2) Check for proper connection of ECM connector at “E01-51” terminal. 3) If OK, measure resistance between “E01-51” terminal of ECM connector and engine ground. *Is resistance below 5 Ω?*	“WHT” wire is open or high resistance circuit.	Faulty ECM ground circuit. If circuit is OK, substitute a known-good ECM and recheck.
10	**APP sensor assembly check** 1) Check APP sensor (sub) referring to “Accelerator Pedal Position (APP) Sensor Assembly Inspection in Section 1C”. *Is output voltage within specified value?*	Substitute a known-good ECM and recheck.	Replace APP sensor assembly.

DTC P2135: Throttle Position Sensor (Main / Sub) Voltage Correlation

S7RW0A1104068

Wiring Diagram

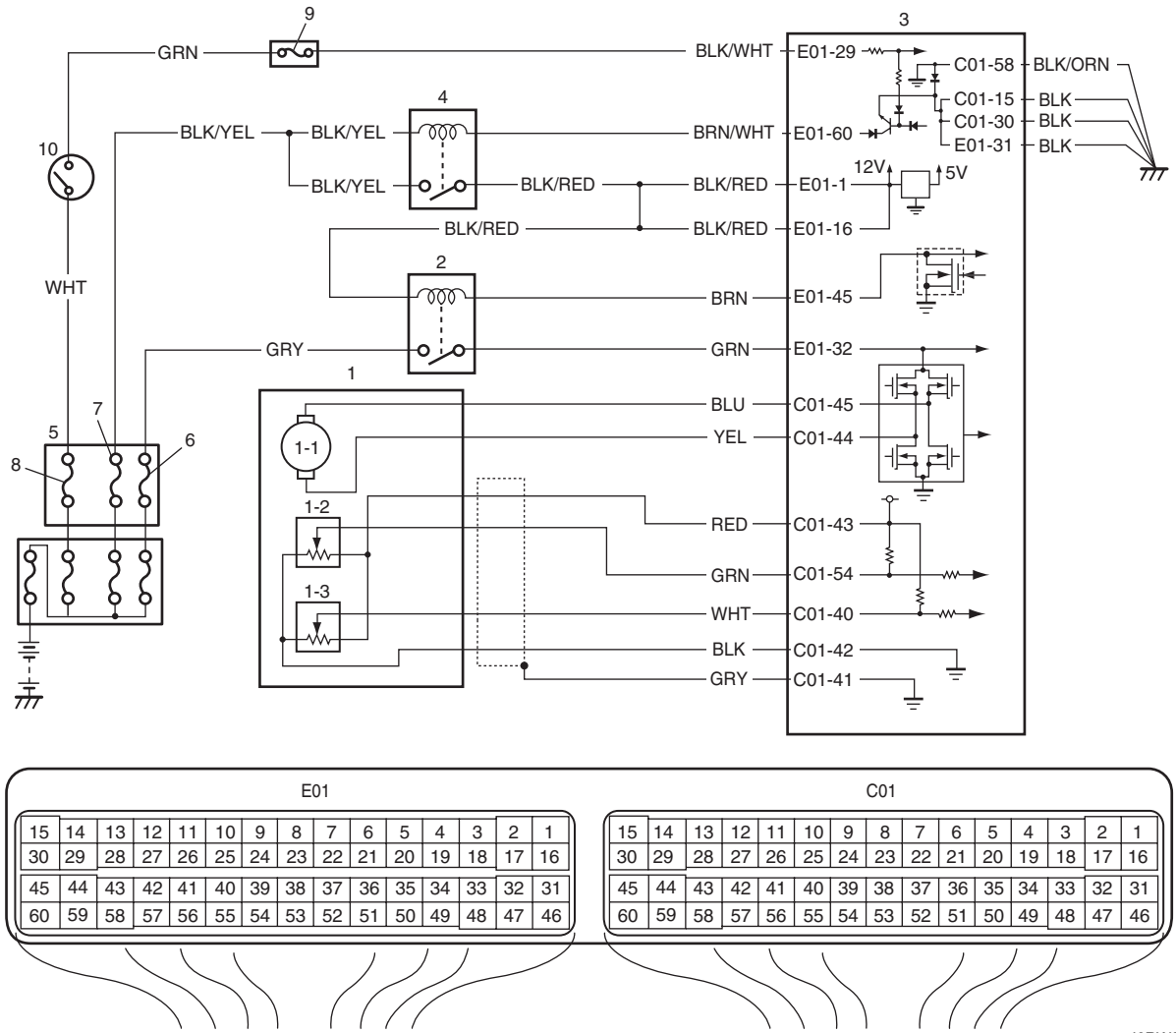

I6RW0D110049-02

1. Electric throttle body assembly	3. ECM	8. “IGN” fuse
1-1. Throttle actuator	4. Main relay	9. “IG COIL” fuse
1-2. Throttle position sensor (main)	5. Individual circuit fuse box No.1	10. Ignition switch
1-3. Throttle position sensor (sub)	6. “THR MOT” fuse	
2. Throttle actuator control relay	7. “FI” fuse	

DTC Detecting Condition and Trouble Area

DTC detecting condition	Trouble area
Difference between the opening angle based on throttle position sensor (main) and the opening angle based on throttle position sensor (sub) is more than specification for specified time. (1 driving detection logic)	• Throttle position sensor (main) and (sub) circuit • Electric throttle body assembly • ECM

DTC Confirmation Procedure

1) With ignition switch turned OFF, connect scan tool.
2) Turn ON ignition switch and clear DTC using scan tool.
3) Keep the accelerator pedal at idle position for 2 seconds.
4) Keep the accelerator pedal at fully depressed position for 2 seconds.
5) Repeat Step 3) and 4) for 3 times.
6) Check DTC.

DTC Troubleshooting

NOTE

Before this troubleshooting is performed, read the precautions for DTC troubleshooting referring to "Precautions for DTC Troubleshooting".

Step	Action	Yes	No
1	*Was "Engine and Emission Control System Check" performed?*	Go to Step 2.	Go to "Engine and Emission Control System Check".
2	**Throttle position sensor and its circuit check** 1) Connect scan tool to DLC with ignition switch turned OFF. 2) Turn ON ignition switch, check each voltage of "TP Sensor 1 Volt" and "TP Sensor 2 Volt" displayed on scan tool when accelerator pedal is idle position and fully depressed. *Is each TP sensor voltage within specified value in the table "Scan Tool Data"?*	Intermittent trouble. Check for intermittent referring to "Intermittent and Poor Connection Inspection in Section 00".	Go to Step 3.
3	**ECM voltage check** 1) Disconnect connector from electric throttle body assembly with ignition switch turned OFF. 2) Check for proper connection to electric throttle body assembly at "RED", "GRN", "WHT" and "BLK" wire terminals. 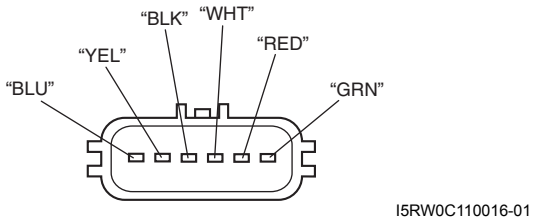 3) If OK, measure voltage between "RED" wire terminal of electric throttle body assembly connector and engine ground with ignition switch turned ON. *Is voltage 4 – 6 V?*	Go to Step 6.	Go to Step 4.

Step	Action	Yes	No
4	**Wire harness check** 1) Disconnect connectors from ECM with ignition switch turned OFF. 2) Measure resistance between “C01-43” terminal of ECM connector and engine ground. *Is resistance infinity?*	Go to Step 5.	“RED” wire is shorted to other circuit.
5	**Wire harness check** 1) Measure voltage between “C01-43” terminal of ECM connector and engine ground with ignition switch turned ON. *Is voltage 0 V?*	Substitute a known-good ECM and recheck.	“RED” wire is shorted to other circuit.
6	**Wire harness check** 1) Measure voltage between “GRN” wire terminal of electric throttle body assembly connector and engine ground, between “WHT” wire terminal of electric throttle body assembly connector and engine ground with ignition switch turned ON. *Is each voltage 4 – 6 V?*	Go to Step 9.	Go to Step 7.
7	**Wire harness check** 1) Turn OFF ignition switch. 2) Disconnect connectors from ECM. 3) Check for proper connection of ECM connector at “C01-54” and “C01-40” terminals. 4) If OK, measure voltage between “C01-54” terminal of ECM connector and engine ground, between “C01-40” terminal of ECM connector and engine ground. *Is each voltage 0 V?*	Go to Step 8.	“GRN” wire or “WHT” wire is shorted to other circuit.
8	**Wire harness check** 1) Measure resistance between “GRN” wire terminal of electric throttle body assembly connector and engine ground, between “WHT” wire terminal of electric throttle body assembly connector and engine ground with ignition switch turned OFF. *Is each resistance infinity?*	Substitute a known-good ECM and recheck.	“GRN” wire or “WHT” wire is shorted to other circuit.
9	**Electric throttle body assembly check** 1) Check throttle position sensor referring to “Throttle Position Sensor Performance Check” under “Electric Throttle Body Assembly On-Vehicle Inspection in Section 1C”. *Is each output voltage within specified value?*	Substitute a known-good ECM and recheck.	Replace electric throttle body assembly.

DTC P2138: Pedal Position Sensor (Main / Sub) Voltage Correlation

S7RW0A1104069

Wiring Diagram

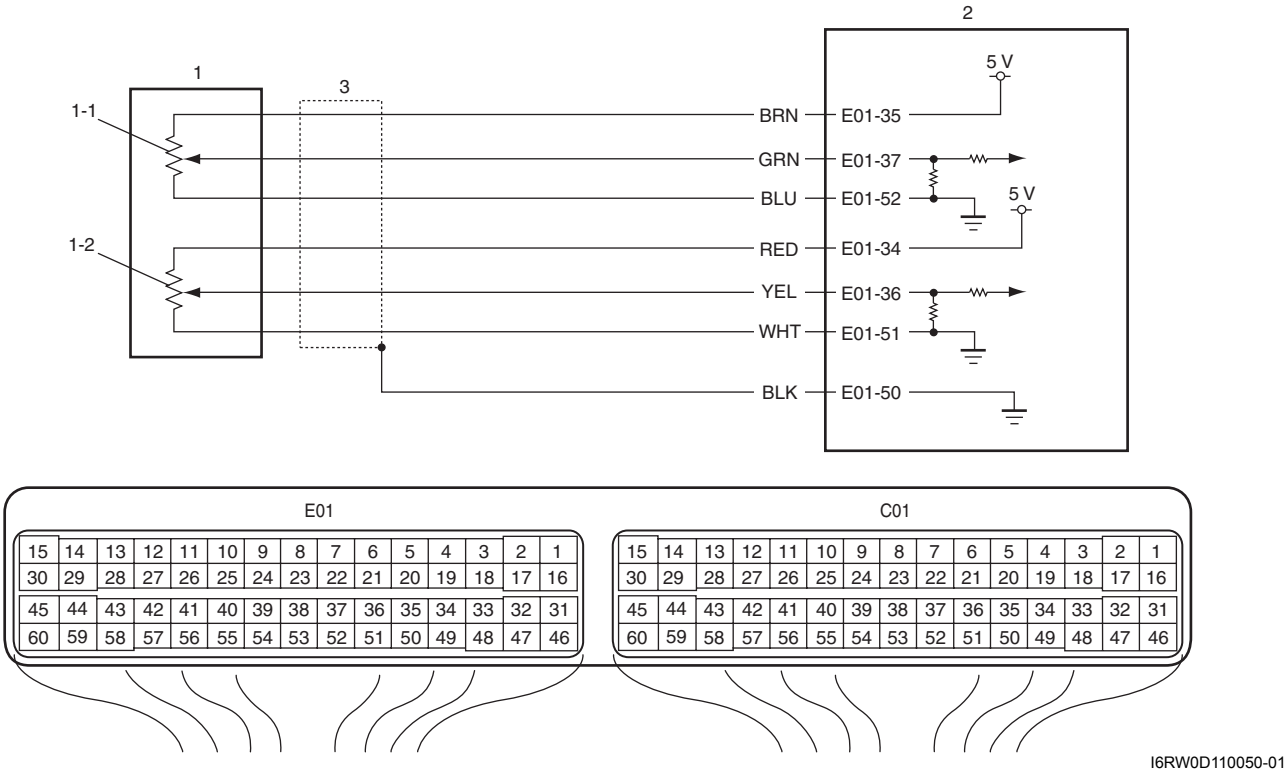

1. APP sensor assembly	1-2. APP sensor (sub)	3. Ground of APP sensor for shield wire
1-1. APP sensor (main)	2. ECM	

DTC Detecting Condition and Trouble Area

DTC detecting condition	Trouble area
Difference between the opening angle based on APP sensor (main) and the opening angle based on APP sensor (sub) is more than specification for specified time. (1 driving detection logic)	• APP sensor (main) and (sub) circuit • APP sensor assembly • ECM

DTC Confirmation Procedure

1) With ignition switch turned OFF, connect scan tool.
2) Turn ON ignition switch and clear DTC using scan tool.
3) Keep the accelerator pedal at idle position for 2 seconds.
4) Keep the accelerator pedal at fully depressed position for 2 seconds.
5) Repeat Step 3) and 4) for 3 times.
6) Check DTC.

DTC Troubleshooting

NOTE

Before this troubleshooting is performed, read the precautions for DTC troubleshooting referring to "Precautions for DTC Troubleshooting".

Step	Action	Yes	No
1	*Was "Engine and Emission Control System Check" performed?*	Go to Step 2.	Go to "Engine and Emission Control System Check".
2	**APP sensor and its circuit check** 1) Connect scan tool to DLC with ignition switch turned OFF. 2) Turn ON ignition switch. 3) Check each voltage of "APP Sensor 1 Volt" and "APP Sensor 2 Volt" displayed on scan tool when accelerator pedal is idle position and fully depressed. *Is each APP sensor voltage within specified value in the table "Scan Tool Data"?*	Intermittent trouble. Check for intermittent referring to "Intermittent and Poor Connection Inspection in Section 00".	Go to Step 3.
3	**ECM voltage check** 1) Disconnect connector from APP sensor assembly with ignition switch turned OFF. 2) Check for proper connection to APP sensor assembly at "BRN", "GRN", "BLU", "RED", "YEL" and "WHT" wire terminals. 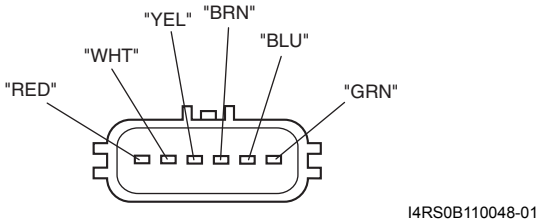 3) If OK, measure voltage between "BRN" wire terminal of APP sensor assembly connector and vehicle body ground, between "RED" wire terminal of APP sensor assembly connector and vehicle body ground with ignition switch turned ON. *Is each voltage 4 – 6 V?*	Go to Step 6.	Go to Step 4.
4	**Wire harness check** 1) Disconnect connectors from ECM with ignition switch turned OFF. 2) Check for proper connection of ECM connector at "E01-35" and "E01-34" terminals 3) If OK, measure resistance between "E01-35" terminal of ECM connector and engine ground, between "E01-34" terminal of ECM connector and engine ground. *Is each resistance infinity?*	Go to Step 5.	"BRN" wire or "RED" wire is shorted to other circuit.
5	**Wire harness check** 1) Measure voltage between "E01-35" terminal of ECM connector and engine ground, between "E01-34" terminal of ECM connector and engine ground with ignition switch turned ON. *Is each voltage 0 V?*	Substitute a known-good ECM and recheck.	"BRN" wire or "RED" wire is shorted to other circuit.

Step	Action	Yes	No
6	**Wire harness check** 1) Disconnect connectors from ECM with ignition switch turned OFF. 2) Check for proper connection of ECM connector at “E01-37”, “E01-52”, “E01-36” and “E01-51” terminals. 3) If OK, measure resistance between “GRN” wire terminal of APP sensor assembly connector and vehicle body ground, between “YEL” wire terminal of APP sensor assembly connector and vehicle body ground. *Is each resistance infinity?*	Go to Step 7.	“GRN” wire or “YEL” wire is shorted to other circuit.
7	**Wire harness check** 1) Turn ON ignition switch. 2) Measure voltage between “E01-37” terminal of ECM connector and engine ground, between “E01-36” terminal of ECM connector and engine ground. *Is each voltage 0 V?*	Go to Step 8.	“GRN” wire or “YEL” wire is shorted to other circuit.
8	**APP sensor assembly check** 1) 1)Check APP sensor referring to “Accelerator Pedal Position (APP) Sensor Assembly Inspection in Section 1C”. *Is output voltage within specified value?*	Substitute a known-good ECM and recheck.	Replace APP sensor assembly.

DTC P2227 / P2228 / P2229: Barometric Pressure Circuit Malfunction

S7RW0A1104070

DTC P2227: Barometric Pressure Circuit Range / Performance
DTC P2228: Barometric Pressure Circuit Low
DTC P2229: Barometric Pressure Circuit High

System Description

Barometric pressure sensor is installed in ECM.

DTC Detecting Condition and Trouble Area

DTC detecting condition	Trouble area
DTC P2227: Difference of barometric pressure value and intake manifold pressure value is more than specified value while engine cranking. (2 driving cycle detection logic)	• Manifold absolute pressure sensor performance problem • Barometric pressure sensor in ECM
DTC P2228: Barometric pressure signal is lower than specified value. (1 driving cycle detection logic)	• Barometric pressure sensor in ECM
DTC P2229: Barometric pressure signal is higher than specified value. (1 driving cycle detection logic)	

DTC Confirmation Procedure
DTC P2227:

⚠ WARNING

- **When performing a road test, select a place where there is no traffic or possibility of a traffic accident and be very careful during testing to avoid occurrence of an accident.**
- **Road test should be carried out by 2 persons, a driver and a tester, on a level road.**

1) Connect scan tool to DLC with ignition switch turned OFF.
2) Turn ON ignition switch and clear DTC, pending DTC and freeze frame data by using scan tool and warm up engine to normal operating temperature.
3) Check DTC and pending DTC by using scan tool.

DTC P2228 / P2229:

1) Connect scan tool to DLC with ignition switch turned OFF.
2) Turn ON ignition switch, clear DTC by using scan tool and run engine for 1 min.
3) Check DTC and pending DTC by using scan tool.

DTC Troubleshooting

NOTE

Before this troubleshooting is performed, read the precautions for DTC troubleshooting referring to "Precautions for DTC Troubleshooting".

Step	Action	Yes	No
1	*Was "Engine and Emission Control System Check" performed?*	Go to Step 2.	Go to "Engine and Emission Control System Check".
2	*Is DTC P2227 set?*	Go to Step 3.	Substitute a known-good ECM and recheck.
3	**MAP sensor check** 1) Check MAP sensor and its circuit referring to "DTC P0107: Manifold Absolute Pressure Circuit Low Input"and/or "DTC P0108: Manifold Absolute Pressure Circuit High Input". *Is check result satisfactory?*	Substitute a known-good ECM and recheck.	MAP sensor or its circuit malfunction.

DTC U0073: Control Module Communication Bus Off

S7RW0A1104071

Refer to "Troubleshooting for CAN-DTC".

DTC U0101: Lost Communication with TCM

S7RW0A1104072

Refer to "Troubleshooting for CAN-DTC".

DTC U0121: Lost Communication with ABS Control Module

S7RW0A1104073

Refer to"Troubleshooting for CAN-DTC".

DTC U0140: Lost Communication with Body Control Module

S7RW0A1104074

Refer to"Troubleshooting for CAN-DTC".

Troubleshooting for CAN-DTC

S7RW0A1104075

Perform this troubleshooting when CAN-DTC is detected.

NOTE

- **When performing this troubleshooting, be sure to have full understanding of "Precaution on CAN Troubleshooting" and observe it.**
- **It may be possible that CAN system has trouble because of fuse blown or low battery voltage. Before troubleshooting, check to make sure that fuse, battery voltage and generator status are normal.**
- **When performing "Communication Bus Check" using SUZUKI scan tool (SUZUKI-SDT) in each step of this troubleshooting, use the following table to determine whether the control module is in good condition or not.**
  Also, while performing "Communication Bus Check", do not perform any work other than instructed in this troubleshooting. Or, it may occur that display of control module/sensor on SUZUKI-SDT screen and/or its background color may change.

Judgment	Display of Communication Bus Check
Normal	• All connected control modules/sensors (communicated by CAN) are displayed and its back ground color is "White".
Abnormal	• Even one of connected control modules/sensors (communicated by CAN) is not displayed. • Display of even one of connected control modules/sensors (communicated by CAN) changes. • Background color of even one of connected control modules/sensors (communicated by CAN) is displayed in "Gray" or "Light green". • Background color of even one of connected control modules/sensors (communicated by CAN) changes

- **When disconnecting each control module connector in this troubleshooting, various DTCs will be detected. Be sure to clear DTCs in the following control modules after completing this troubleshooting.**
  - **ECM**
  - **BCM**
  - **TCM**
  - **Keyless start control module**
  - **ESP® control module**
  - **4WD control module**
  - **HVAC control module (Auto A/C model)**
  - **P/S control module**

Wiring Diagram

Refer to "Troubleshooting for Communication Error with Scan Tool Using CAN".

Trouble area

Refer to "Troubleshooting for Communication Error with Scan Tool Using CAN".

Troubleshooting

Step	Action	Yes	No
1	**DTC Check** 1) Turn ignition switch to OFF position. 2) Connect scan tool to DLC. 3) Check DTC in the following control modules. • ECM • TCM • BCM • Keyless start control module • ESP® control module • 4WD control module *Is there any DTC other than CAN-DTC?*	Go to applicable troubleshooting of DTC other than CAN-DTC.	Go to Step 2.
2	**Control module connector check** 1) Turn ignition switch to OFF position. 2) Be sure to disconnect scan tool from DLC. 3) Disconnect all the following control module / sensor connectors. • Control modules communicated by CAN – ECM – TCM – ABS / ESP® control module – BCM – Combination meter – Keyless start control module – 4WD control module • Sensor communicated by CAN – Steering angle sensor (ESP® model) – Yaw rate / G sensor (ESP® model) 4) Check for proper connection to terminal of each CAN line of all control module / sensor (communicated by CAN) connectors. 5) If OK, connect all connectors of control module / sensor communicated by CAN securely. 6) Recheck DTC for all control modules communicated by CAN. *Is there any CAN-DTC?*	Go to Step 3.	Intermittent trouble. Check for intermittent referring to “Intermittent and Poor Connection Inspection in Section 00”.

Step	Action	Yes	No
3	**CAN line check** 1) Turn ignition switch to OFF position. 2) Disconnect connectors of all control module / sensor communicated by CAN. 3) Check all the following CAN lines for open, short to power circuit, short to ground circuit, short to other CAN line and high resistance. • Between BCM connector and DLC • Between BCM connector and ABS / ESP® control module connector • Between ABS / ESP® control module connector and ECM connector • Between ECM connector and TCM connector • Between BCM connector and keyless start control module connector • Between combination meter connector and 4WD control module connector • Between BCM connector and combination meter connector • Between BCM connector and yaw rate / G sensor connector • Between combination meter connector and steering angle sensor connector *Are all CAN lines in good condition?*	Go to Step 4.	Repair CAN line.
4	**Power and ground circuits check of BCM, ECM, ABS / ESP® control module and combination meter** 1) Check power and ground circuits of the following control module. • ECM: Refer to “ECM Power and Ground Circuit Check”. • BCM: Refer to “BCM Power Circuit and Ground Circuit Check in Section 10B”. • Combination meter: Refer to “Combination Meter Circuit Diagram in Section 9C”. • ABS / ESP® control module: Refer to “ABS Hydraulic Unit / Control Module Assembly Power and Ground Circuit Check in Section 4E” or “ESP® Hydraulic Unit / Control Module Assembly Power and Ground Circuit Check in Section 4F”. *Are they in good condition?*	Go to Step 5.	Repair power and/or ground circuit.

Step	Action	Yes	No
5	**CAN communication check of BCM, ECM, ABS / ESP® control module and combination meter** 1) Turn ignition switch to OFF position. 2) Connect BCM, ECM, ABS / ESP® control module and combination meter connectors. 3) Perform “Communication Bus Check” under “Bus Check” using SUZUKI-SDT with ignition switch turned ON. *Are all of BCM, ECM, ABS / ESP® control module and combination meter normally displayed?*	Go to Step 12.	Go to Step 6.
6	**Terminating resistance check in ECM and combination meter** 1) Turn ignition switch to OFF position and then disconnect negative (–) cable at battery. 2) Measure resistance between CAN High terminal (2) and CAN Low terminal (3) on DLC (1). 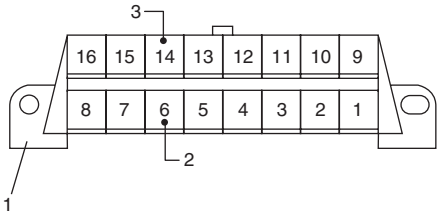 I7RW01110098-01 *If resistance 57 – 67 Ω?*	Go to Step 7.	Go to Step 8.
7	**Substitute ECM and recheck** 1) Substitute a known-good ECM and recheck. *Is it in good condition?*	End.	Substitute a known-good combination meter and recheck. If NG, go to Step 11.
8	**Terminating resistance check in ECM** 1) Make sure that ignition switch is OFF position and battery negative (–) cable is disconnected. 2) Disconnect combination meter connector. 3) Measure resistance between CAN high terminal and CAN low terminal on DLC as the same manner as Step 6. *Is resistance 114 – 134 Ω?*	Substitute a known-good combination meter.	Go to Step 9.
9	**Internal circuit check in BCM** 1) Make sure that ignition switch is OFF position and battery negative (–) cable is disconnected. 2) Disconnect ABS / ESP® control module connector. 3) Measure resistance between the followings • Between CAN high terminal on DLC and “E08-2” terminal on ABS / ESP® control module connector • Between CAN low terminal on DLC and “E08-13” terminal on ABS / ESP® control module connector *Is each resistance 0 – 1 Ω?*	Go to Step 10.	Substitute a known-good BCM.

Step	Action	Yes	No
10	**Internal circuit check in ABS / ESP® control module** 1) Make sure that ignition switch is OFF position and battery negative (–) cable is disconnected. 2) Connect ABS / ESP® control module connector and disconnect ECM connector. 3) Measure resistance between the followings • Between CAN High terminal on DLC and “E01-3” terminal on ECM connector • Between CAN Low terminal on DLC and “E01-18” terminal on ECM connector *If each resistance 0 – 1 Ω?*	Substitute a known-good ECM and recheck. If NG, go to step 11.	Substitute a known-good ABS / ESP® control module.
11	**Substitute BCM and recheck** 1) Substitute a known-good BCM and recheck. *Is it in good condition?*	End.	Substitute a known-good ABS / ESP® control module.
12	**CAN communication check of TCM** 1) Turn ignition switch to OFF position. 2) Connect TCM connectors. 3) Perform “Communication Bus Check” under “Bus Check” using SUZUKI-SDT with ignition switch turned ON. *Are all of BCM, ECM, ABS / ESP® control module, combination meter and TCM normally displayed?*	Go to Step 13.	Check power and ground circuits of TCM referring to “TCM Power and Ground Circuit Check in Section 5A”. If OK, substitute a known-good TCM.
13	**CAN communication check of keyless start control module** 1) Turn ignition switch to OFF position. 2) Connect keyless start control module connector. 3) Perform “Communication Bus Check” under “Bus Check” using SUZUKI-SDT with ignition switch turned ON. *Are all of BCM, ECM, ABS / ESP® control module, combination meter, TCM and keyless start control module normally displayed?*	Go to Step 14.	Check power and ground circuits of keyless start control module referring to “Keyless Start Control Module Power and Ground Circuit Check in Section 10E”. If OK, substitute a known-good keyless start control module.
14	**CAN communication check of yaw rate / G sensor (ESP® model)** 1) Turn ignition switch to OFF position. 2) Connect yaw rate / G sensor connector. 3) Perform “Communication Bus Check” under “Bus Check” using SUZUKI-SDT with ignition switch turned ON. *Are all of BCM, ECM, ABS / ESP® control module, combination meter, TCM, keyless start control module and yaw rate / G sensor normally displayed?*	Go to Step 15.	Check power and ground circuit of yaw rate / G sensor referring to “Step 3” to “Step 5” under “DTC C1034 / C1039: Yaw Rate / G Sensor Power Supply Failure / Internal Failure in Section 4F”. If OK, substitute a known-good yaw rate / G sensor.

Step	Action	Yes	No
15	**CAN communication check of 4WD control module** 1) Turn ignition switch to OFF position. 2) Connect combination meter connector and 4WD control module. 3) Perform “Communication Bus Check” under “Bus Check” on SUZUKI-SDT with ignition switch turned ON. *Are all of BCM, ECM, ABS / ESP® control module, combination meter, TCM, keyless start control module, yaw rate / G sensor, combination meter and 4WD control module normally displayed?*	Go to Step 16.	Check power and ground circuits of 4WD control module referring to “Step 2” and “Step 3” under “DTC C1240: 4WD Control Module Power Supply Circuit Malfunction in Section 3B”. If OK, substitute a known-good 4WD control module.
16	**CAN communication check of steering angle sensor (ESP® model)** 1) Turn ignition switch to OFF position. 2) Connect steering angle sensor connector. 3) Perform “Communication Bus Check” under “Bus Check” using SUZUKI-SDT with ignition switch turned ON. *Are all of BCM, ECM, ABS / ESP® control module, combination meter, TCM, keyless start control module, yaw rate / G sensor and steering angle sensor normally displayed?*	Recheck DTC.	Check power and ground circuit of steering angle sensor referring to “Step 4” and “Step 5” under “DTC C1037: Steering Angle Sensor Power Supply Failure in Section 4F”. If OK, substitute a known-good steering angle sensor.

Inspection of ECM and Its Circuits

S7RW0A1104076

ECM and its circuits can be checked by measuring voltage, pulse signal and resistance with special tool connected.

⚠ CAUTION

ECM cannot be checked by itself. It is strictly prohibited to connect voltmeter or ohmmeter to ECM with ECM connectors disconnected from it.

Voltage Check

1) Remove ECM (1) from its bracket referring to “Engine Control Module (ECM) Removal and Installation in Section 1C”.
2) Connect special tool between ECM and ECM connectors securely.

   Special tool
   (A): 09933–06320

3) Check voltage and/or pulse signal using voltmeter (2) and oscilloscope (3).

NOTE

- **As each terminal voltage is affected by battery voltage, confirm that it is 11 V or more when ignition switch is turned ON.**
- **Voltage with asterisk (*) cannot be measured with voltmeter because it is pulse signal. Use oscilloscope for its check if necessary.**
- **Before this inspection, be sure to read the “Precautions of ECM Circuit Inspection”.**

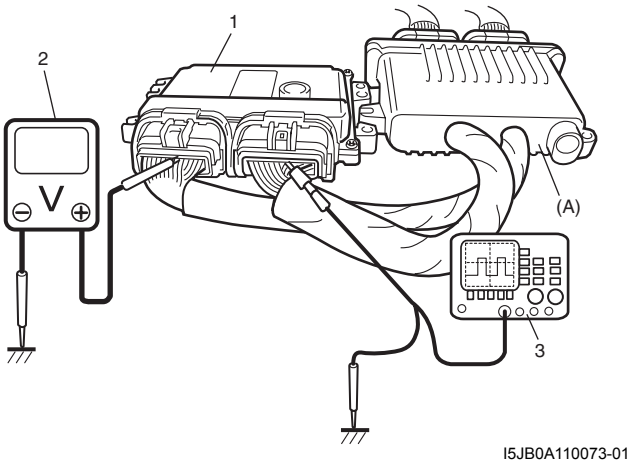

Viewed from harness side

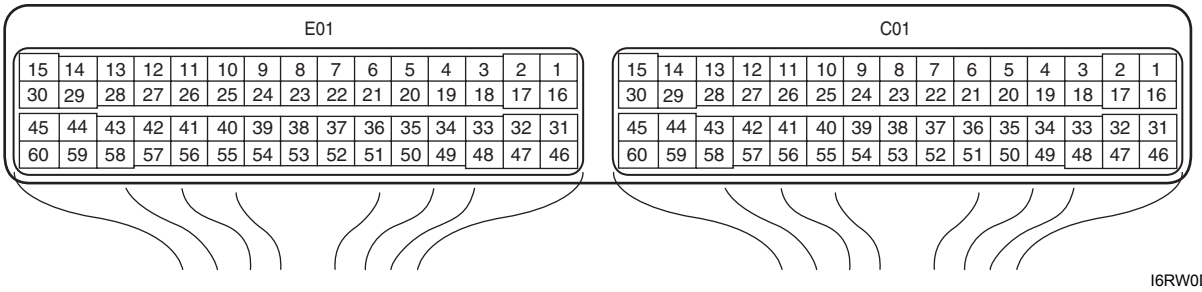

Terminal No.	Wire color	Circuit	Normal voltage	Condition	Remarks
C01-1	BLU/ YEL	Fuel injector No.1 output	10 – 14 V	Ignition switch turned ON.	—
			*0 – 0.6 V ↑↓ 10 – 14 V (“Reference waveform No.1: ”, “Reference waveform No.2: ” and “Reference waveform No.28: ”)	Engine running at idle after warmed up engine.	Output signal is active low pulse. Pulse frequency varies depending on engine speed.
C01-2	BLU/ WHT	Fuel injector No.2 output	10 – 14 V	Ignition switch turned ON.	—
			*0 – 0.6 V ↑↓ 10 – 14 V (“Reference waveform No.1: ” and “Reference waveform No.3: ”)	Engine running at idle after warmed up engine.	Output signal is active low pulse. Pulse frequency varies depending on engine speed.
C01-3	GRN/ ORN	EGR valve (stepper motor coil 2) output (if equipped)	10 – 14 V	Ignition switch turned ON.	—
			*0 – 1 V ↑↓ 10 – 14 V (“Reference waveform No.4: ”)	Ignition switch is turned to ST (cranking) position.	Output signal is active low duty pulse. Number of pulse generated times varies depending on vehicle condition.
C01-4	GRN/ RED	EGR valve (stepper motor coil 1) output (if equipped)	10 – 14 V	Ignition switch turned ON.	—
			*0 – 1 V ↑↓ 10 – 14 V (“Reference waveform No.4: ”)	Ignition switch is turned to ST (cranking) position.	Output signal is active low duty pulse. Number of pulse generated times varies depending on vehicle condition.

Terminal No.	Wire color	Circuit	Normal voltage	Condition	Remarks
C01-5	GRN/ WHT	Ignition coil No.2 and No.3 output	0 – 0.6 V	Ignition switch turned ON.	—
			*0 – 0.6 V ↑↓ 3 – 5 V (“Reference waveform No.5: ” and “Reference waveform No.6: ”)	Engine running at idle after warmed up engine.	Output signal is active high pulse. Pulse frequency varies depending on engine speed.
C01-6	GRN/ YEL	Ignition coil No.1 and No.4 output	0 – 0.6 V	Ignition switch turned ON.	—
			*0 – 0.6 V ↑↓ 3 – 5 V (“Reference waveform No.6: ”, “Reference waveform No.7: ” and “Reference waveform No.28: ”)	Engine running at idle after warmed up engine.	Output signal is active high pulse. Pulse frequency varies depending on engine speed.
C01-7	—	—	—	—	—
C01-8	—	—	—	—	—
C01-9	—	—	—	—	—
C01-10	WHT	Oxygen signal of heated oxygen sensor-1	0 – 1 V	Ignition switch turned ON.	—
			*Deflects between over 0.5 V and under 0.45 V (“Reference waveform No.8: ” and “Reference waveform No.9: ”)	While engine running at 2,000 r/min. for 1 min. or longer after warmed up.	
C01-11	BRN	Oxygen signal of heated oxygen sensor-2 (if equipped)	4 – 5 V	Ignition switch turned ON.	—
			*Deflects between over 0.5 V and under 0.45 V (“Reference waveform No.10: ”)	While engine running at 2,000 r/min. or more after vehicle running over 30 km/h, 19 mph for 5 min.	
C01-12	WHT	CAN (low) communication line (active low signal) to TCM (for A/T model)	*0.5 – 2.5 V (“Reference waveform No.23: ”)	Ignition switch turned ON with engine stop.	CAN communication line signal is pulse. Pulse signal displayed with a regular frequency which varies depending on engine condition.
C01-13	RED	CAN (high) communication line (active high signal) to TCM (for A/T model)	*2.5 – 4.5 V (“Reference waveform No.23: ”)		
C01-14	GRY/ RED	Output of 5 V power source for MAP sensor and A/C refrigerant pressure sensor (if equipped with A/C)	4.5 – 5.5 V	Ignition switch turned ON.	—
C01-15	BLK	Ground for ECM	Below 0.3 V	Ignition switch turned ON.	—

Terminal No.	Wire color	Circuit	Normal voltage	Condition	Remarks
C01-16	BLU/ RED	Fuel injector No.3 output	10 – 14 V	Ignition switch turned ON.	—
			*0 – 0.6 V ↑↓ 10 – 14 V ("Reference waveform No.1: " and "Reference waveform No.11: ")	Engine running at idle after warmed up engine.	Output signal is active low pulse. Pulse frequency varies depending on engine speed.
C01-17	BLU/ ORN	Fuel injector No.4 output	10 – 14 V	Ignition switch turned ON.	—
			*0 – 0.6 V ↑↓ 10 – 14 V ("Reference waveform No.1: " and "Reference waveform No.12: ")	Engine running at idle after warmed up engine.	Output signal is active low pulse. Pulse frequency varies depending on engine speed.
C01-18	BRN/ YEL	EGR valve (stepper motor coil 4) output (if equipped)	10 – 14 V	Ignition switch turned ON.	—
			*0 – 1 V ↑↓ 10 – 14 V ("Reference waveform No.4: ")	Ignition switch is turned to ST (cranking) position.	Output signal is active low duty pulse. Number of pulse generated times varies depending on vehicle condition.
C01-19	WHT/ RED	EGR valve (stepper motor coil 3) output (if equipped	10 – 14 V	Ignition switch turned ON.	—
			*0 – 1 V ↑↓ 10 – 14 V ("Reference waveform No.4: ")	Ignition switch is turned to ST (cranking) position.	Output signal is active low duty pulse. Number of pulse generated times varies depending on vehicle condition.
C01-20	RED/ YEL	CMP sensor signal	0 – 1 V or 4 – 5 V	Ignition switch turned ON.	—
			*0 – 0.6 V ↑↓ 4 – 5 V ("Reference waveform No.13: " and "Reference waveform No.14: ")	Engine running at idle after warmed up engine.	Sensor signal is pulse. Pulse frequency varies depending on engine speed. (6 pulses are generated per 1 camshaft revolution.)
C01-21	PNK	CKP sensor signal	0 – 1 V or 4 – 5 V	Ignition switch turned ON.	—
			*4 – 5 V ↑↓ 0 – 0.6 V ("Reference waveform No.13: " and "Reference waveform No.14: ")	Engine running at idle after warming up engine.	Sensor signal is pulse. Pulse frequency varies depending on engine speed. (30 (36 – 6) pulses are generated per 1 crankshaft revolution.)
C01-22	—	—	—	—	—
C01-23	—	—	—	—	—
C01-24	LT GRN	Engine coolant temp. (ECT) sensor signal	3.5 – 4.0 V	Ignition switch turned ON, ECT at 0 °C, 32 °F.	—
			1.38 – 1.72 V	Ignition switch turned ON, ECT at 50 °C, 122 °F.	
			0.40 – 0.53 V	Ignition switch turned ON, ECT at 100 °C, 212 °F.	
C01-25	BLK/ YEL	Intake air temp. (IAT) sensor signal	3.18 – 3.67 V	Ignition switch turned ON, IAT at 0 °C, 32 °F.	—
			1.32 – 1.65 V	Ignition switch turned ON, IAT at 40 °C, 104 °F.	
			0.46 – 0.60 V	Ignition switch turned ON, IAT at 80 °C, 176 °F.	

Terminal No.	Wire color	Circuit	Normal voltage	Condition	Remarks
C01-26	GRN/ BLK	Mass air flow (MAF) sensor signal	0.5 – 1.5 V	Ignition switch turned ON with engine at stop.	—
			1.5 – 2.0 V (“Reference waveform No.15: ”)	When engine running at specified idle speed after warmed up.	
C01-27	GRY	Ground for MAF sensor	Below 0.3 V	Ignition switch turned ON.	—
C01-28	BLU / YEL	General control signal output	0 – 1 V	Engine: Stop IG switch: ON	—
			10 – 14 V	Engine: Idle speed after warning up	
C01-29	BLU/ BLK	EVAP canister purge valve output	10 – 14 V	Ignition switch turned ON with engine at stop.	—
			*0 – 0.6 V ↑↓ 10 – 14 V (“Reference waveform No.16: ”)	Set EVAP canister purge valve at 52% by using “Engine / Active Test” of scan tool.	Output signal is active low duty pulse. Duty ratio varies depending on vehicle condition.
C01-30	BLK	Ground for ECM	Below 0.3 V	Ignition switch turned ON.	—
C01-31	—	—	—	—	—
C01-32	—	—	—	—	—
C01-33	—	—	—	—	—
C01-34	—	—	—	—	—
C01-35	—	—	—	—	—
C01-36	—	—	—	—	—
C01-37	—	—	—	—	—
C01-38	—	—	—	—	—
C01-39	—	—	—	—	—
C01-40	WHT	Throttle position sensor (sub) signal	1.57 – 1.90 V	Ignition switch turned ON and accelerator pedal at idle position after warmed up engine.	—
			3.88 – 4.45 V (“Reference waveform No.29: ”)	Ignition switch turned ON and accelerator pedal at full depressed position after warmed up engine.	
C01-41	GRY	Ground for shield wire of TP sensor circuit	Below 0.3 V	Ignition switch turned ON.	—
C01-42	BLK	Ground for throttle position sensor	Below 0.3 V	Ignition switch turned ON.	—
C01-43	RED	Output for 5 V power source of throttle position sensor	4.5 – 5.5 V	Ignition switch turned ON.	—
C01-44	YEL	Output of throttle actuator	0 – 1 V	Ignition switch turned ON and accelerator pedal at idle position after warmed up engine.	Output signal is pulse. Duty ratio varies depending on throttle valve and accelerator pedal position.
			*0 – 1 V ↑↓ 10 – 14 V (“Reference waveform No.26: ” and “Reference waveform No.27: ”)	Ignition switch turned ON and accelerator pedal at full depressed position after warmed up engine.	

Terminal No.	Wire color	Circuit	Normal voltage	Condition	Remarks
C01-45	BLU	Output of throttle actuator	0 – 1 V	Ignition switch turned ON and accelerator pedal at full depressed position after warmed up engine.	Output signal is pulse. Duty ratio varies depending on throttle valve and accelerator pedal position.
			*0 – 1 V ↑↓ 10 – 14 V (“Reference waveform No.26: ” and “Reference waveform No.27: ”)	Ignition switch turned ON and accelerator pedal at idle position after warmed up engine.	
C01-46	BLK/ RED	Heater output of heated oxygen sensor-1	10 – 14 V	Ignition switch turned ON.	—
			*0 – 2 V ↑↓ 10 – 14 V (“Reference waveform No.8: ” and “Reference waveform No.9: ”)	Engine running at idle after warmed up engine.	Output signal is active low duty pulse. Duty ratio varies depending on engine condition.
C01-47	RED/ BLU	Heater output of heated oxygen sensor-2 (if equipped)	10 – 14 V	Ignition switch turned ON.	—
			0 – 1 V (“Reference waveform No.10: ”)	Engine running at idle after vehicle running over 30 km/h, 19 mph for 5 min.	
C01-48	YEL/ GRN	Starting motor signal	0 – 1 V	Ignition switch turned ON.	—
			6 – 14 V	While engine cranking.	
C01-49	—	—	—	—	—
C01-50	WHT/ BLU	Ground of ECM for shield wire	Below 0.3 V	Ignition switch turned ON.	—
C01-51	—	—	—	—	—
C01-52	—	—	—	—	—
C01-53	RED/ BLK	Manifold absolute pressure (MAP) sensor signal (if equipped)	Approx. 4 V (“Reference waveform No.17: ”)	Ignition switch turned ON with barometric pressure at 100 kPa, 760 mmHg.	—
			0.4 – 2.0 V (“Reference waveform No.18: ”)	While engine running at specified idle speed after warmed up with barometric pressure at 100 kPa, 760 mmHg.	
C01c01-54	GRN	Throttle position sensor (main) signal	0.75 – 1.08 V	Ignition switch turned ON and accelerator pedal at idle position after warmed up engine.	—
			3.67 – 4.24 V (“Reference waveform No.29: ”)	Ignition switch turned ON and accelerator pedal at full depressed position after warmed up engine.	
C01-55	GRY/ BLU	Ground for sensors	Below 0.3 V	Ignition switch turned ON.	—
C01-56	RED	Knock sensor signal	2 – 3 V (“Reference waveform No.19: ” and “Reference waveform No.20: ”)	Ignition switch turned ON.	—
				Engine running at 4000 r/ min. after warmed up.	
C01-57	ORN	Ground for sensors	Below 0.3 V	Ignition switch turned ON.	—
C01-58	BLK/ ORN	Ground for ECM	Below 0.3 V	Ignition switch turned ON.	—

Terminal No.	Wire color	Circuit	Normal voltage	Condition	Remarks
C01-59	GRN/ WHT	Oil control valve ground (for engine with VVT system)	Below 1.3 V	Ignition switch turned ON.	—
C01-60	GRN/ RED	Oil control valve output (for engine with VVT system)	*0 – 0.6 V ↑↓ 10 – 14 V (“Reference waveform No.21: ” and “Reference waveform No.22: ”)	At the moment of ignition switch turned ON.	Output signal is active high pulse. Duty ratio varies depending on vehicle condition.

Terminal No.	Wire color	Circuit	Normal voltage	Condition	Remarks
E01-1	BLK/ RED	Main power supply	10 – 14 V	Ignition switch turned ON.	—
E01-2	WHT/ RED	Power source for ECM internal memory	10 – 14 V	Ignition switch turned ON.	—
E01-3	RED	CAN (high) communication line (active high signal) to ABS / ESP® control module	*2.5 – 4.5 V (“Reference waveform No.23: ”)	Ignition switch turned ON with engine at stop.	CAN communication line signal is pulse. Pulse signal displayed with a regular frequency with varies depending on engine condition.
E01-4	BRN	Engine revolution signal output for P/ S control module	0 – 0.8 V	Ignition switch turned ON with engine at stop.	—
			*0 – 1 V ↑↓ 8 – 14 V (“Reference waveform No.24: ” and “Reference waveform No.25: ”)	While engine running.	Output signal is pulse. Pulse frequency varies depending on engine speed. (2 pulses are generated per 1 crankshaft revolution.) (3000 r/min. = 100 Hz)
E01-5	—	—	—	—	—
E01-6	—	—	—	—	—
E01-7	—	—	—	—	—
E01-8	—	—	—	—	—
E01-9	—	—	—	—	—
E01-10	—	—	—	—	—
E01-11	—	—	—	—	—
E01-12	—	—	—	—	—
E01-13	YEL/ RED	Clock signal for immobilizer coil antenna	10 – 14 V	Ignition switch turned ON.	—
E01-14	—	—	—	—	—
E01-15	GRN/ WHT	Fuel pump relay output	0 – 2.5 V	For 2 sec. from the time ignition switch is turned ON or while engine is running.	—
			10 – 14 V	On and after 2 sec. from the time ignition switch is turned ON or while engine is at stop.	
E01-16	BLK/ RED	Main power supply	10 – 14 V	Ignition switch turned ON.	—
E01-17	—	—	—	—	—

Terminal No.	Wire color	Circuit	Normal voltage	Condition	Remarks
E01-18	WHT	CAN (low) communication line (active low signal) to ABS / ESP® control module	*0.5 – 2.5 V (“Reference waveform No.23: ”)	Ignition switch turned ON with engine at stop.	CAN communication line signal is pulse. Pulse signal displayed with a regular frequency which varies depending on engine condition.
E01-19	BLU/ WHT	Electric load signal for heater blower motor	10 – 14 V	IG switch: ON Blower selector < 3rd position (Manual A/C model)	—
				IG switch: ON Blower selector < 2nd position (Auto A/C model)	
			0 – 1 V	IG switch: ON Blower selector > 2nd position	
E01-20	GRN/ WHT	Brake light switch signal	0 – 1 V	Ignition switch turned ON, stop lamp not lit up.	—
			10 – 14 V	Ignition switch turned ON, stop lamp lit up.	
E01-21	—	—	—	—	—
E01-22	—	—	—	—	—
E01-23	—	—	—	—	—
E01-24	YEL/ RED	Fuel level sensor signal	0 – 6 V	Ignition switch turned ON. Voltage varies depends on fuel level.	—
E01-25	—	—	—	—	—
E01-26	RED/ BLU	EPS signal	10 – 14 V	Ignition switch turned ON.	—
			0 – 1 V	With engine running at idle speed, and steering wheel turned to the right or left as far as it stops.	
E01-27	—	—	—	—	—
E01-28	YEL/ BLK	Serial communication line for immobilizer coil antenna	10 – 14 V	Ignition switch turned ON.	—
E01-29	BLK/ WHT	Ignition switch signal	0 – 1 V	Ignition switch turned OFF.	—
			10 – 14 V	Ignition switch turned ON.	
E01-30	WHT	Starting motor control relay output	0 – 1 V	Ignition switch turned ON.	—
			0 – 1 V	Ignition switch is turned to ST (engine cranking) position.	
E01-31	BLK	Ground for ECM	Below 0.3 V	Ignition switch turned ON.	—
E01-32	GRN	Power supply of throttle actuator drive circuit	10 – 14 V	Ignition switch turned ON.	—
E01-33	—	—	—	—	—
E01-34	RED	Output for 5 V power source of APP sensor (sub)	4.5 – 5.5 V	Ignition switch turned ON.	—
E01-35	BRN	Output for 5 V power source of APP sensor (main)	4.5 – 5.5 V	Ignition switch turned ON.	—

Terminal No.	Wire color	Circuit	Normal voltage	Condition	Remarks
E01-36	YEL	APP sensor (sub) signal	0.37 – 0.38 V	Ignition switch turned ON and accelerator pedal at idle position after warmed up engine.	—
			1.70 – 2.00 V (“Reference waveform No.30: ”)	Ignition switch turned ON and accelerator pedal at full depressed position after warmed up engine.	
E01-37	GRN	APP sensor (main) signal	0.75 – 0.85 V	Ignition switch turned ON and accelerator pedal at idle position after warmed up engine.	—
			3.46 – 4.24 V (“Reference waveform No.30: ”)	Ignition switch turned ON and accelerator pedal at full depressed position after warmed up engine.	
E01-38	—	—	—	—	—
E01-39	—	—	—	—	—
E01-40	—	—	—	—	—
E01-41	—	—	—	—	—
E01-42	—	—	—	—	—
E01-43	—	—	—	—	—
E01-44	—	—	—	—	—
E01-45	BRN	Throttle actuator control relay output	0 – 1 V	Ignition switch turned ON.	—
E01-46	LT GRN	Radiator cooling fan relay output	10 – 14 V	Ignition switch turned ON and ECT is 97.5 °C (206 °F) or less without operating A/C.	—
			0 – 2 V	Ignition switch turned ON and ECT is 100 °C (212 °F) or more.	
E01-47	GRY	A/C compressor relay output (if equipped with A/C)	10 – 14 V	Engine running, A/C switch OFF and blower selector at OFF position.	—
			0 – 1 V	Engine running, A/C switch ON and blower selector at 1st position or more.	
E01-48	—	—	—	—	—
E01-49	—	—	—	—	—
E01-50	BLK	Ground for shield wire of APP sensor	Below 0.3 V	Ignition switch turned ON.	—
E01-51	WHT	Ground for APP sensor (sub)	Below 0.3 V	Ignition switch turned ON.	—
E01-52	BLU	Ground for APP sensor (main)	Below 0.3 V	Ignition switch turned ON.	—
E01-53	—	—	—	—	—
E01-54	ORN	Ground for sensors	Below 0.3 V	Ignition switch turned ON.	—

Terminal No.	Wire color	Circuit	Normal voltage	Condition	Remarks
E01-55	RED / BLU	A/C refrigerant pressure sensor signal (if equipped with A/C)	1.38 – 1.52 V	Engine running, A/C switch OFF and blower selector at OFF position, A/C refrigerant pressure: 800 kPa (116 psi)	—
			2.15 – 2.38 V	Engine running, A/C switch ON and blower selector at 1st position or more, A/C refrigerant pressure: 1400 kPa (203 psi)	
			2.67 – 2.95 V	Engine running, A/C switch ON and blower selector at 1st position or more, A/C refrigerant pressure: 1800 kPa (261 psi)	
E01-56	—	—	—	—	—
E01-57	WHT/ BLK	A/C evaporator outlet air temp. sensor signal (if equipped with A/C) (For manual A/C type)	3.4 – 3.7 V	Ignition switch turned ON at A/C evaporator outlet temperature 0 °C (32 °F).	—
			2.5 – 2.8 V	Ignition switch turned ON at A/C evaporator outlet temperature 15 °C (59 °F).	
			1.7 – 2.0 V	Ignition switch turned ON at A/C evaporator outlet temperature 30 °C (86 °F).	
		A/C evaporator outlet air temp. sensor signal (if equipped with A/C) (For automatic A/C type)	0 – 2 V	Ignition switch turned ON	
E01-58	RED/ BLK	A/C condenser fan relay (if equipped with A/C)	0 – 1 V	Blower speed selector ON A/C or defroster switch ON Engine running or Engine coolant temperature at more than 110 °C (230 °F) with engine running.	—
			10 – 14 V	Except the above mentioned condition with engine running	
E01-59	—	—	—	—	—
E01-60	BRN/ WHT	Main power supply relay output	10 – 14 V	Ignition switch turned OFF.	—
			0 – 2 V	Ignition switch turned ON.	

Reference waveform No.1

Fuel injector signal (1) with engine idling

Measurement terminal	CH1: “C01-2” to “C01-58”
Oscilloscope setting	CH1: 20 V/DIV TIME: 1 ms/DIV
Measurement condition	• After warmed up to normal operating temperature • Engine at specified idle speed

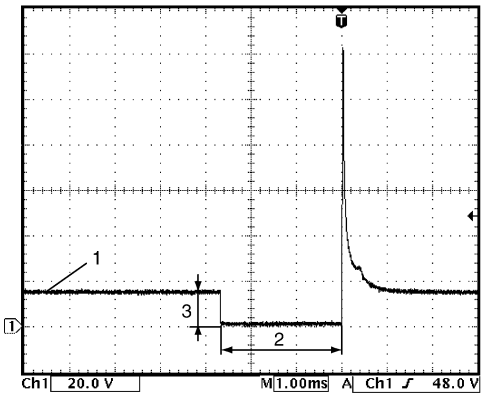

I4RS0B110050-01

2. Fuel injection pulse width: 2-4 msec.	3. 10 – 14 V

Reference waveform No.2

No.1 fuel injector signal (2) with engine idling

Measurement terminal	CH1: “C01-20” to “C01-58” CH2: “C01-1” to “C01-58”
Oscilloscope setting	CH1: 5 V/DIV, CH2: 20 V/DIV TIME: 40 ms/DIV
Measurement condition	• After warmed up to normal operating temperature • Engine at specified idle speed

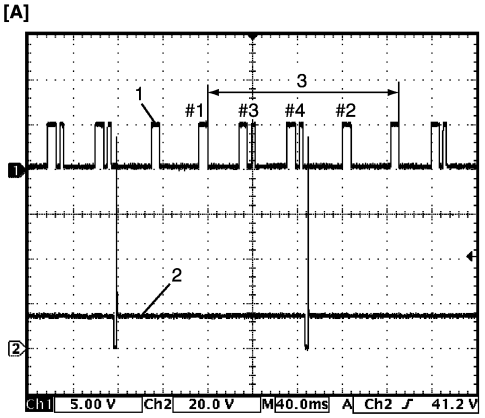

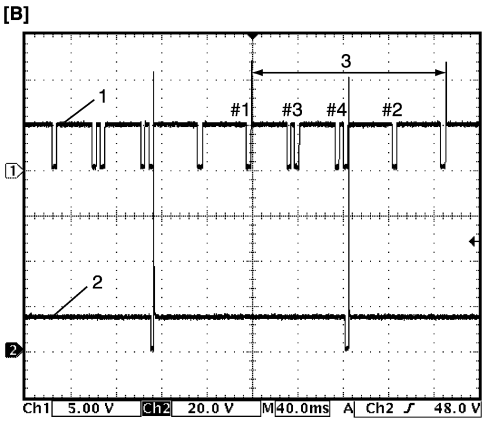

I4RS0B110051-01

[A]:	For VVT model
[B]:	For non-VVT model
1.	Cylinder reference signal (CMP reference signal)
3.	720° crank angle

Reference waveform No.3

No.2 fuel injector signal (2) with engine idling

Measurement terminal	CH1: “C01-20” to “C01-58” CH2: “C01-2” to “C01-58”
Oscilloscope setting	CH1: 5 V/DIV, CH2: 20 V/DIV TIME: 40 ms/DIV
Measurement condition	• After warmed up to normal operating temperature • Engine at specified idle speed

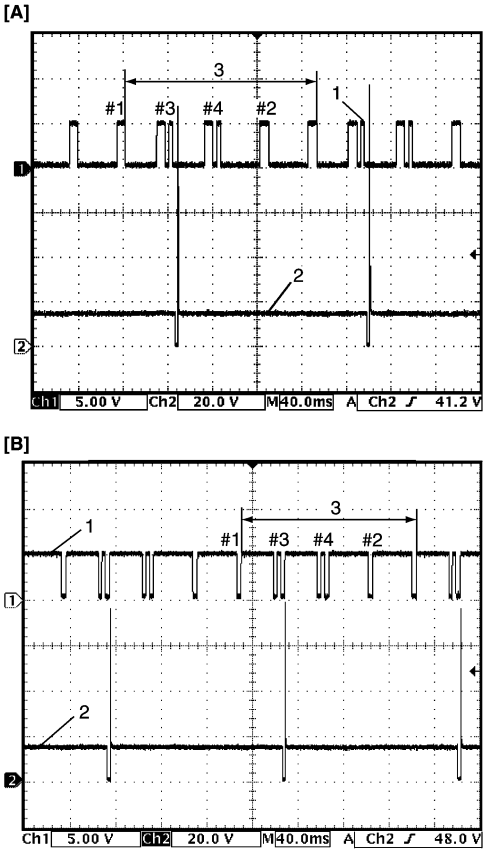

I4RS0B110052-01

[A]:	For VVT model
[B]:	For non-VVT model
1.	Cylinder reference signal (CMP reference signal)
3.	720° crank angle

Reference waveform No.4

EGR valve signal

Measurement terminal	CH1: “C01-4” to “C01-58” CH2: “C01-3” to “C01-58” CH3: “C01-19” to “C01-58” CH4: “C01-18” to “C01-58”
Oscilloscope setting	CH1: 20 V/DIV, CH2: 20 V/DIV CH3: 20 V/DIV, CH4: 20 V/DIV TIME: 40 ms/DIV
Measurement condition	Engine at cranking

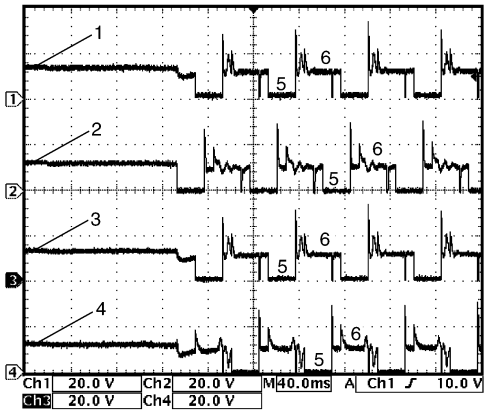

I4RS0B110053-01

1.	EGR valve stepper motor coil 1 signal
2.	EGR valve stepper motor coil 2 signal
3.	EGR valve stepper motor coil 3 signal
4.	EGR valve stepper motor coil 4 signal
5.	ON signal
6.	OFF signal

Reference waveform No.5

Ignition coil No.2 and No.3 signal (2) with engine idling

Measurement terminal	CH1: “C01-20” to “C01-58” CH2: “C01-5” to “C01-58”
Oscilloscope setting	CH1: 2 V/DIV, CH2: 2 V/DIV TIME: 40 ms/DIV
Measurement condition	• After warmed up to normal operating temperature • Engine at specified idle speed

[A]

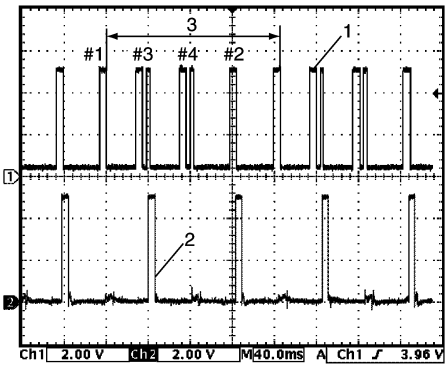

[B]

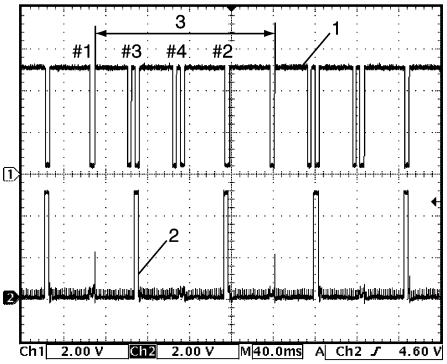

I4RS0B110054-01

[A]:	For VVT model
[B]:	For non-VVT model
1.	Cylinder reference signal (CMP reference signal)
3.	720° crank angle

Reference waveform No.6

Ignition coil signal (1) with engine idling

Measurement terminal	CH1: “C01-6” to “C01-58”
Oscilloscope setting	CH1: 2 V/DIV TIME: 4 ms/DIV
Measurement condition	• After warmed up to normal operating temperature • Engine at specified idle speed

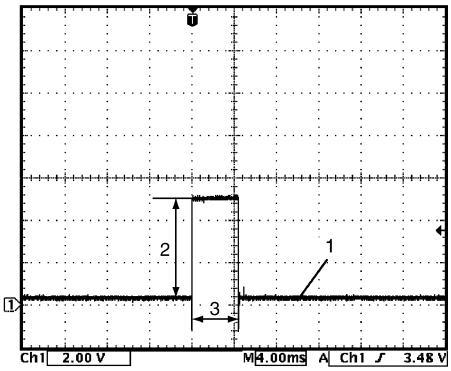

I4RS0B110055-02

2. 4 – 6 V	3. Ignition coil pulse width: 4 – 5 msec.

Reference waveform No.7

Ignition coil No.1 and No.4 signal (2) with engine idling

Measurement terminal	CH1: “C01-20” to “C01-58” CH2: “C01-6” to “C01-58”
Oscilloscope setting	CH1: 2 V/DIV, CH2: 2 V/DIV TIME: 40 ms/DIV
Measurement condition	• After warmed up to normal operating temperature • Engine at specified idle speed

[A]

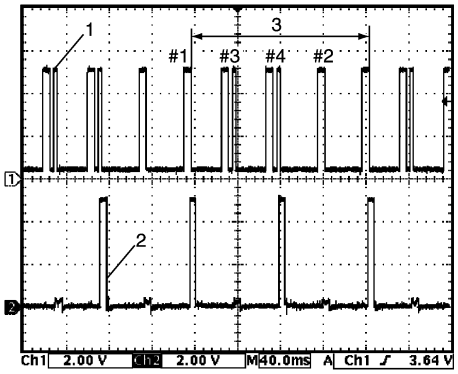

[B]

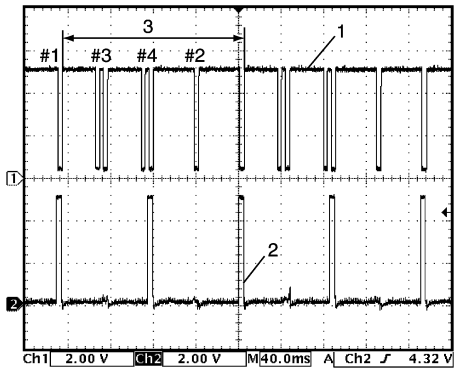

I4RS0B110056-01

[A]:	For VVT model
[B]:	For non-VVT model
1.	Cylinder reference signal (CMP reference signal)
3.	720° crank angle

Reference waveform No.8

Heated oxygen sensor-1 signal (1) with engine idling

Measurement terminal	CH1: “C01-10” to “C01-57” CH2: “C01-46” to “C01-58”
Oscilloscope setting	CH1: 500 mV/DIV, CH2: 20 V/DIV TIME: 1 s/DIV
Measurement condition	• After warmed up to normal operating temperature • Engine at specified idle speed

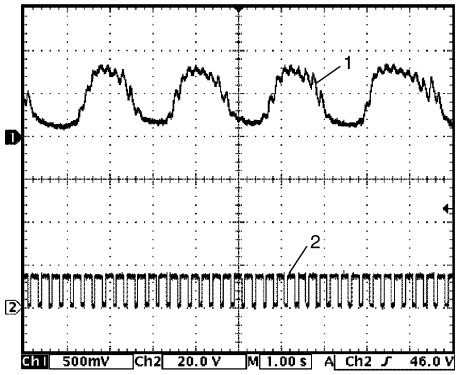

I4RS0B110058-01

2.	Heated oxygen sensor-1 heater signal

Reference waveform No.9

Heated oxygen sensor-1 heater signal (2) with engine idling

Measurement terminal	CH1: “C01-10” to “C01-57” CH2: “C01-46” to “C01-58”
Oscilloscope setting	CH1: 500 mV/DIV, CH2: 10 V/DIV TIME: 200 ms/DIV
Measurement condition	• After warmed up to normal operating temperature • Engine at specified idle speed

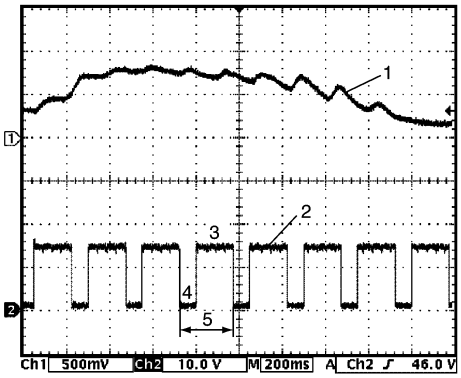

I4RS0B110059-01

1.	Heated oxygen sensor-1 signal	4.	ON signal
3.	OFF signal	5.	One duty cycle

Reference waveform No.10

Heated oxygen sensor-2 heater signal (4) with engine idling

Measurement terminal	CH1: “C01-11” to “C01-57” CH2: “C01-47” to “C01-58”
Oscilloscope setting	CH1: 500 mV/DIV, CH2: 10 V/DIV TIME: 2 s/DIV
Measurement condition	• After warmed up to normal operating temperature • Vehicle driving at 60 km/h (37 mph) for 10 min. • Engine at specified idle speed

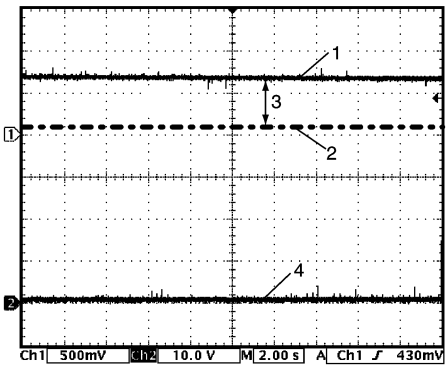

I4RS0B110060-01

1.	Heated oxygen sensor-2 signal upper limit
2.	Heated oxygen sensor-2 signal lower limit
3.	Normal waveform range

Reference waveform No.11

No.3 fuel injector signal (2) with engine idling

Measurement terminal	CH1: “C01-20” to “C01-58” CH2: “C01-16” to “C01-58”
Oscilloscope setting	CH1: 5 V/DIV, CH2: 20 V/DIV TIME: 40 ms/DIV
Measurement condition	• After warmed up to normal operating temperature • Engine at specified idle speed

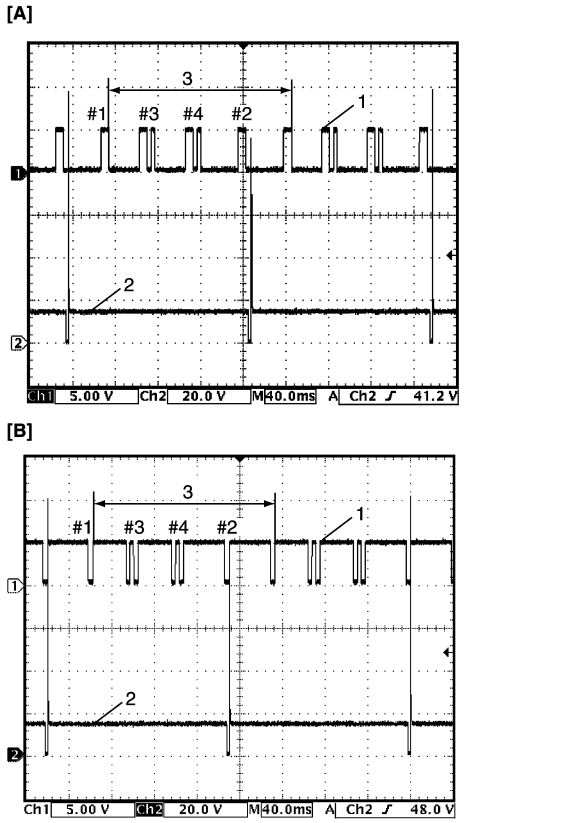

I4RS0B110062-01

[A]:	For VVT model
[B]:	For non-VVT model
1.	Cylinder reference signal (CMP reference signal)
3.	720° crank angle

Reference waveform No.12

No.4 fuel injector signal (2) with engine idling

Measurement terminal	CH1: “C01-20” to “C01-58” CH2: “C01-17” to “C01-58”
Oscilloscope setting	CH1: 5 V/DIV, CH2: 20 V/DIV TIME: 40 ms/DIV
Measurement condition	• After warmed up to normal operating temperature • Engine at specified idle speed

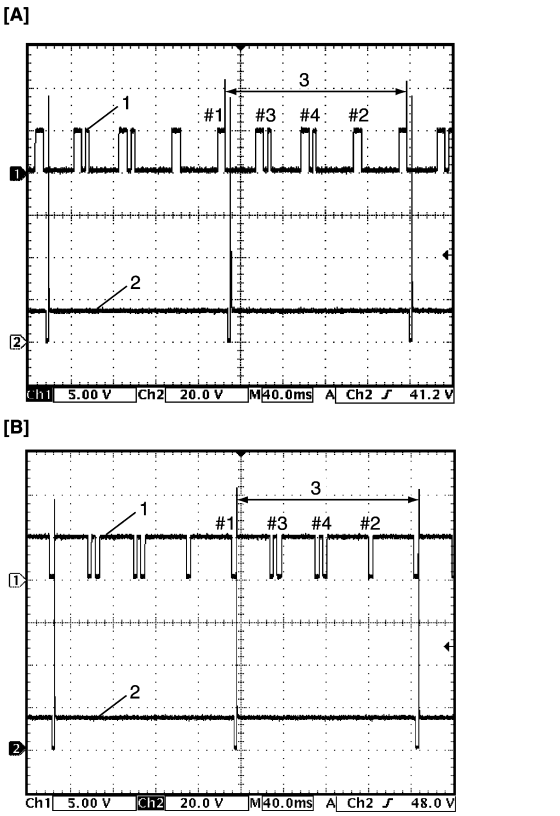

I4RS0B110063-01

[A]:	For VVT model
[B]:	For non-VVT model
1.	Cylinder reference signal (CMP reference signal)
3.	720° crank angle

Reference waveform No.13

CMP sensor signal with engine idling

Measurement terminal	CH1: “C01-20” to “C01-58” CH2: “C01-21” to “C01-58”
Oscilloscope setting	CH1: 2 V/DIV, CH2: 2 V/DIV TIME: 20 ms/DIV
Measurement condition	• After warmed up to normal operating temperature • Engine at specified idle speed

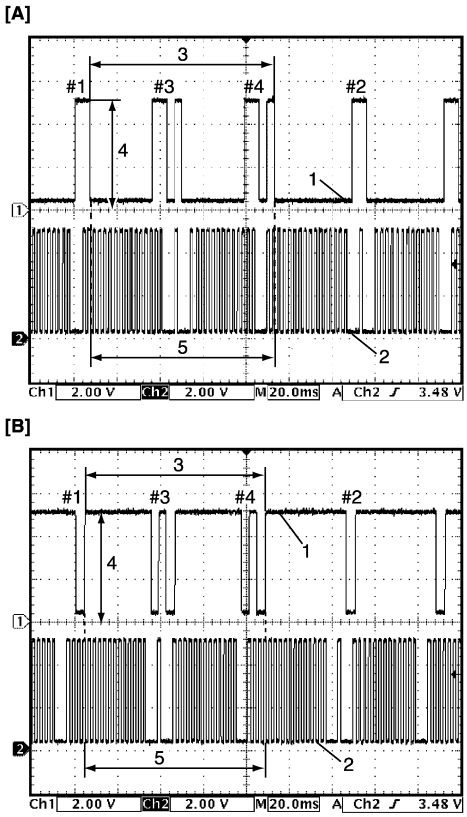

I4RS0B110064-01

[A]:	For VVT model
[B]:	For non-VVT model
1.	Cylinder reference signal (CMP reference signal)
2.	CKP signal
3.	360° crank angle
4.	4 – 5 V
5.	36 – 6 = 30 CKP pulse

Reference waveform No.14

CMP sensor signal with engine idling

Measurement terminal	CH1: “C01-20” to “C01-58” CH2: “C01-21” to “C01-58”
Oscilloscope setting	CH1: 2 V/DIV, CH2: 2 V/DIV TIME: 10 ms/DIV
Measurement condition	• After warmed up to normal operating temperature • Engine at specified idle speed

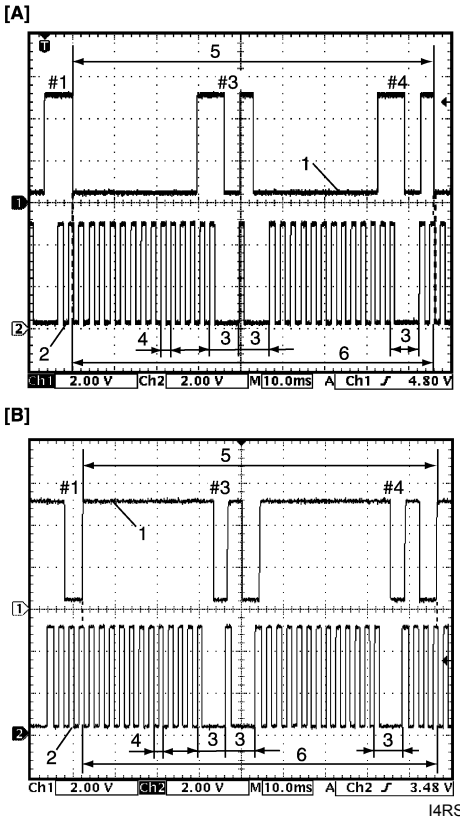

I4RS0B110065-01

[A]:	For VVT model
[B]:	For non-VVT model
1.	Cylinder reference signal (CMP reference signal)
2.	CKP signal
3.	30° crank angle
4.	10° crank angle
5.	360° crank angle
6.	36 – 6 = 30 CKP pulse

Reference waveform No.15

Mass air flow sensor signal (1) with engine racing

Measurement terminal	CH1: “C01-26” to “C01-27” CH2: “C01-54” to “C01-55”
Oscilloscope setting	CH1: 1 V/DIV, CH2: 1 V/DIV TIME: 200 ms/DIV
Measurement condition	• After warmed up to normal operating temperature • Engine racing

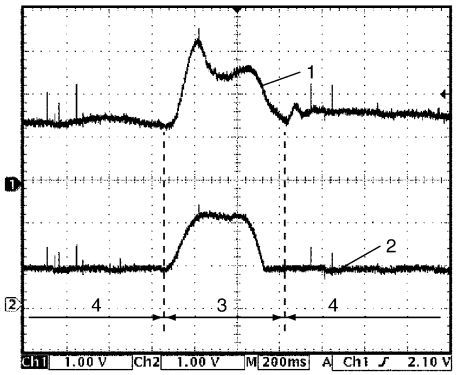

I4RS0B110066-01

2. Throttle position sensor signal	4. Idle
3. Racing	

Reference waveform No.16

EVAP canister purge valve signal

Measurement terminal	CH1: “C01-29” to “C01-58”
Oscilloscope setting	CH1: 10 V/DIV TIME: 40 ms/DIV
Measurement condition	• After warmed up to normal operating temperature • EVAP canister purge valve setting at 52% by using “Engine / Active Test” of scan tool.

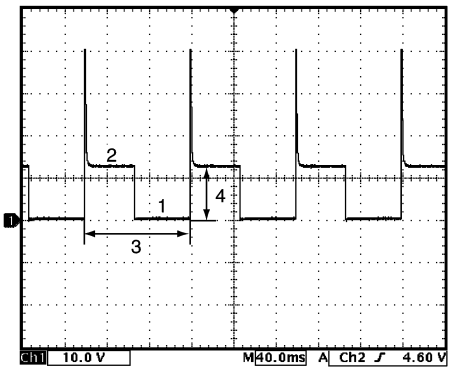

I4RS0B110067-01

1. ON signal	3. One duty cycle
2. OFF signal	4. 10 – 14 V

Reference waveform No.17

Manifold absolute pressure sensor signal (1) with ignition switch turned ON

Measurement terminal	CH1: “C01-53” to “C01-55” CH2: “C01-54” to “C01-55”
Oscilloscope setting	CH1: 2 V/DIV, CH2: 1 V/DIV TIME: 200 ms/DIV
Measurement condition	• After warmed up to normal operating temperature • Ignition switch turned ON

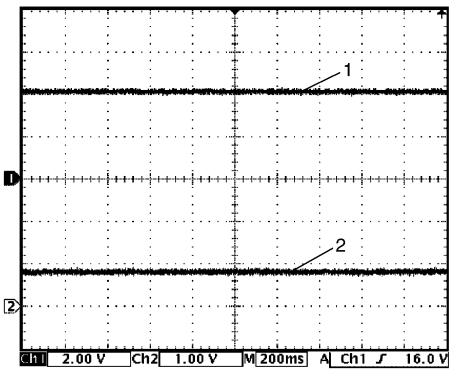

I4RS0B110070-01

2. Throttle position sensor signal

Reference waveform No.18

Manifold absolute pressure sensor signal (1) with engine racing

Measurement terminal	CH1: “C01-53” to “C01-55” CH2: “C01-54” to “C01-55”
Oscilloscope setting	CH1: 2 V/DIV, CH2: 2 V/DIV TIME: 200 ms/DIV
Measurement condition	• After warmed up to normal operating temperature • Engine racing

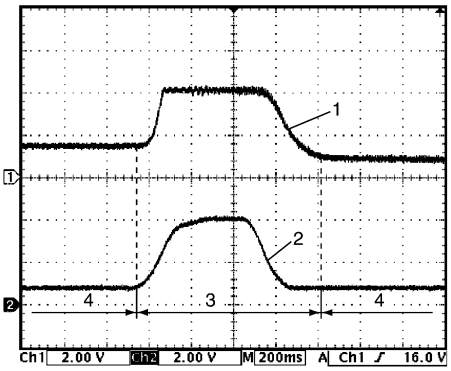

I4RS0B110071-01

2. Throttle position sensor signal	4. Idle
3. Racing	

Reference waveform No.19

Knock sensor signal at engine speed 4000 r/min.

Measurement terminal	CH1: “C01-56” to “C01-58”
Oscilloscope setting	CH1: 1 V/DIV TIME: 10 ms/DIV
Measurement condition	• After warmed up to normal operating temperature • Engine running at 4000 r/min.

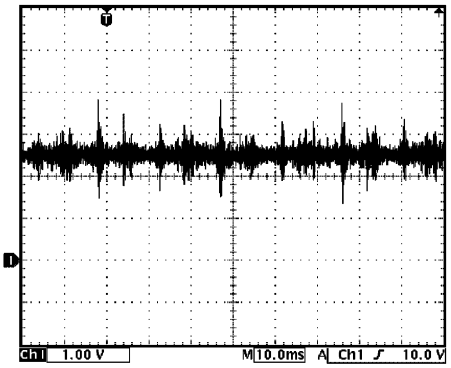

I4RS0B110072-01

Reference waveform No.20

Knock sensor signal at engine speed 4000 r/min.

Measurement terminal	CH1: “C01-56” to “C01-58”
Oscilloscope setting	CH1: 1 V/DIV TIME: 200 μs/DIV
Measurement condition	• After warmed up to normal operating temperature • Engine running at 4000 r/min.

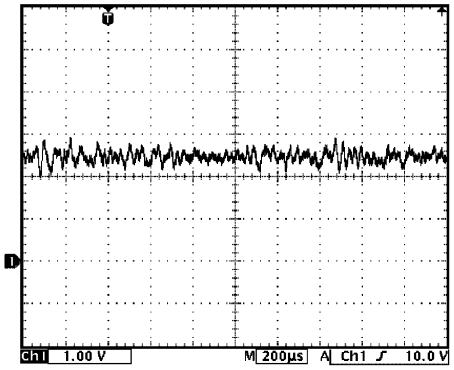

I4RS0B110073-01

Reference waveform No.21

Oil control valve signal with engine idling (for engine with VVT system)

Measurement terminal	CH1: “C01-60” to “C01-59”
Oscilloscope setting	CH1: 5 V/DIV TIME: 2 ms/DIV
Measurement condition	At the moment of the ignition switch turned on

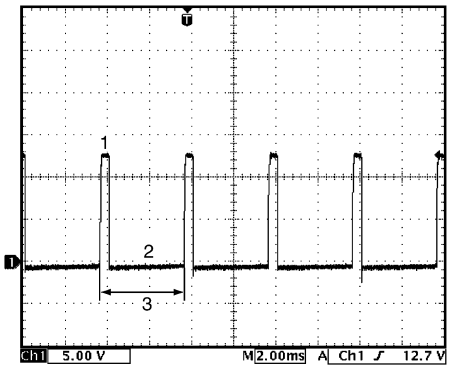

I4RS0B110074-01

1. ON signal	3. Only duty cycle
2. OFF signal	

Reference waveform No.22

Oil control valve signal with engine racing (for engine with VVT system)

Measurement terminal	CH1: “C01-60” to “C01-59”
Oscilloscope setting	CH1: 5 V/DIV TIME: 400 μs/DIV
Measurement condition	• After warmed up to normal operating temperature • Vehicle running at 20 km/h (12 mph) and depress accelerator pedal fully

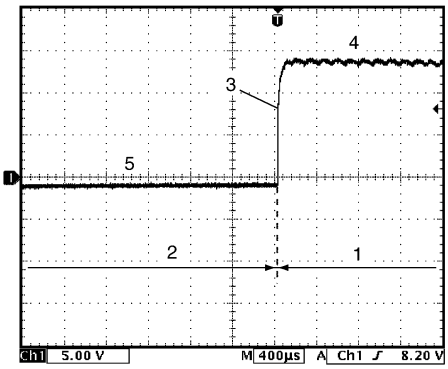

I4RS0B110075-01

1. Accelerator pedal depressed fully	4. ON signal
2. Accelerator pedal depressed partially	5. OFF signal
3. Oil control valve signal	

Reference waveform No.23

CAN communication line signal from ABS / ESP® control module assembly or TCM with ignition switch turned ON

Measurement terminal	CH1: “E01-3” to “C01-58” / CH1: “C01-13” to “C01-58” CH2: “E01-18” to “C01-58” / CH2: “C01-12” to “C01-58”
Oscilloscope setting	CH1: 1 V/DIV, CH2: 1 V/DIV TIME: 40 μs/DIV
Measurement condition	Ignition switch turned ON (Signal pattern is depending on engine condition)

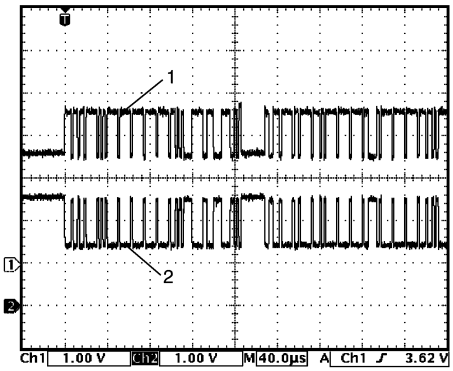

I4RS0B110076-01

1.	CAN communication line signal (High)
2.	CAN communication line signal (Low)

Reference waveform No.24

Ignition pulse (engine revolution) signal (2) with engine idling

Measurement terminal	CH1: “C01-20” to “C01-58” CH2: “E01-4” to “C01-58”
Oscilloscope setting	CH1: 5 V/DIV, CH2: 5 V/DIV TIME: 40 ms/DIV
Measurement condition	• After warmed up to normal operating temperature • Engine at specified idle speed

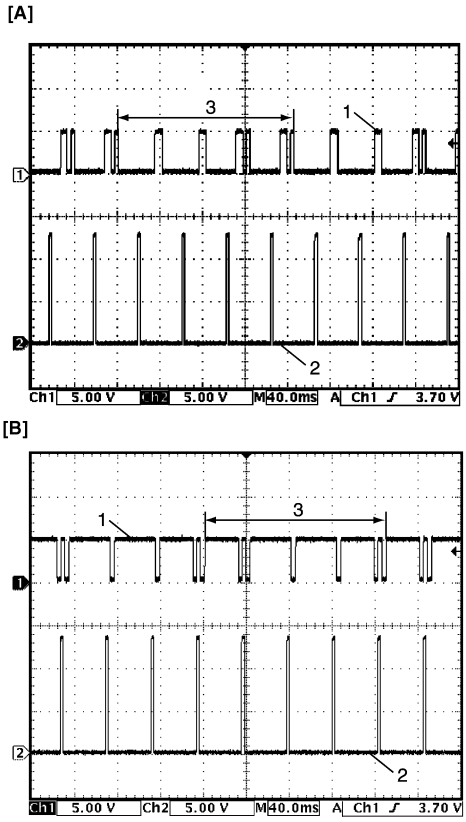

I4RS0B110077-01

[A]:	For VVT model
[B]:	For non-VVT model
1.	Cylinder reference signal (CMP reference signal)
3.	720° crank angle

Reference waveform No.25

Ignition pulse (engine revolution) signal (2) with engine idling

Measurement terminal	CH1: “C01-20” to “C01-58” CH2: “E01-4” to “C01-58”
Oscilloscope setting	CH1: 5 V/DIV, CH2: 5 V/DIV TIME: 10 ms/DIV
Measurement condition	• After warmed up to normal operating temperature • Engine at specified idle speed

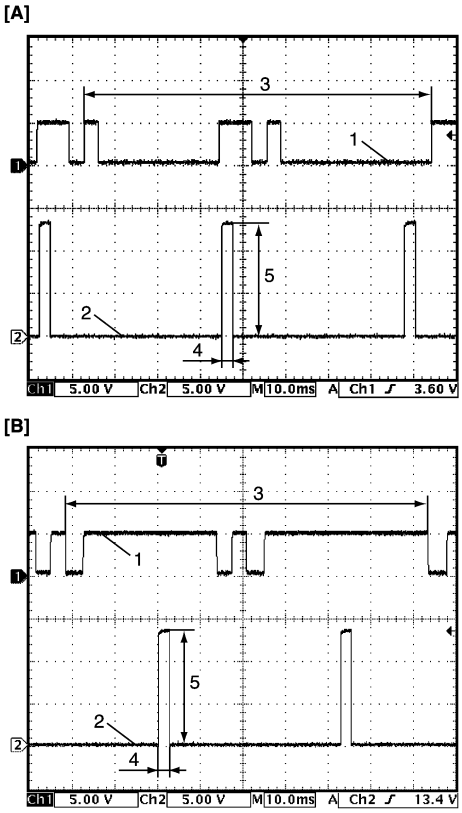

I4RS0B110078-01

[A]:	For VVT model
[B]:	For non-VVT model
1.	Cylinder reference signal (CMP reference signal)
3.	360° crank angle
4.	2 to 4 msec.
5.	10 – 14 V

Reference waveform No.26

Throttle actuator output signal with ignition switch turned ON

Measurement terminal	CH1: “C01-45” to “C01-58” CH2: “C01-44” to “C01-58”
Oscilloscope setting	CH1: 5 V/DIV, CH2: 5 V/DIV TIME: 2 ms/DIV
Measurement condition	• After warmed up to normal operating temperature • Ignition switch turned ON and accelerator pedal at idle position

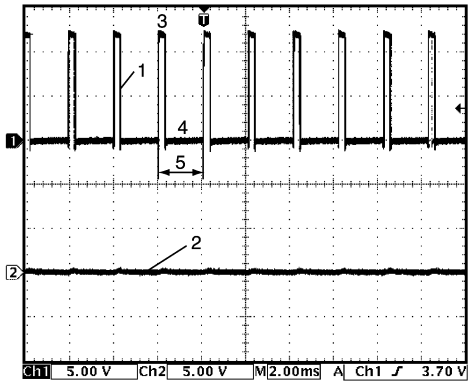

I4RS0B110081-02

1.	Throttle actuator drive signal (“C01-45” terminal)
2.	Throttle actuator drive signal (“C01-44” terminal)
3.	ON signal
4.	OFF signal
5.	One duty cycle

Reference waveform No.27

Throttle actuator output signal with ignition switch turned ON

Measurement terminal	CH1: “C01-45” to “C01-58” CH2: “C01-44” to “C01-58”
Oscilloscope setting	CH1: 5 V/DIV, CH2: 5 V/DIV TIME: 2 ms/DIV
Measurement condition	• After warmed up to normal operating temperature • Ignition switch turned ON and accelerator pedal at full depressed position

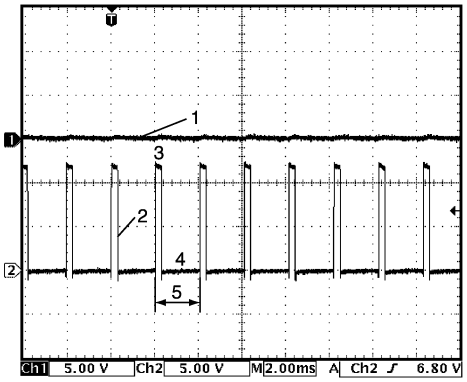

I4RS0B110082-02

1.	Throttle actuator drive signal (“C01-45” terminal)
2.	Throttle actuator drive signal (“C01-44” terminal)
3.	ON signal
4.	OFF signal
5.	One duty cycle

Reference waveform No.28

Ignition coil signal and fuel injector signal with engine cranking

Measurement terminal	CH1: “C01-20” to “C01-58” CH2: “C01-6” to “C01-58” CH3: “C01-1” to “C01-58” CH4: “C01-48” to “C01-58”
Oscilloscope setting	CH1: 5 V/DIV, CH2: 5 V/DIV CH3: 50 V/DIV, CH4: 10 V/DIV TIME: 200 ms/DIV
Measurement condition	• After warmed up to normal operating temperature • Engine at cranking

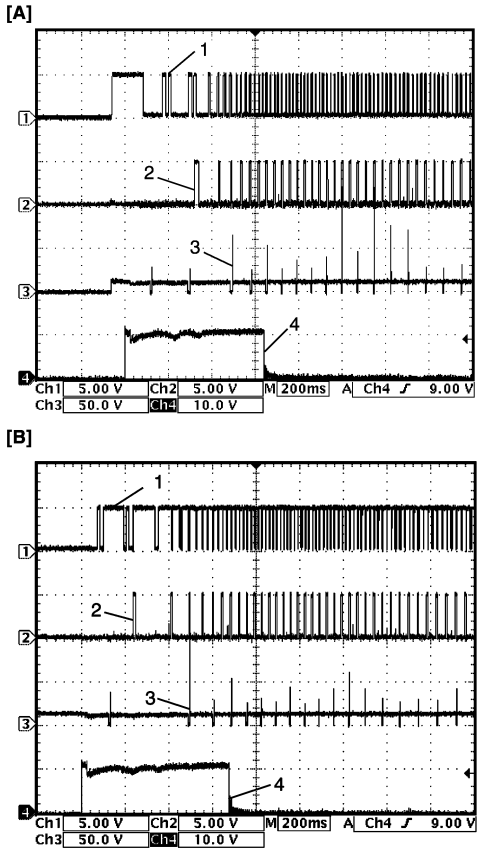

I4RS0B110083-01

[A]:	For VVT model
[B]:	For non-VVT model
1.	Cylinder reference signal (CMP reference signal)
2.	Ignition coil No.1 and No.4 signal
3.	No.1 fuel injector signal
4.	Engine start signal

Reference waveform No.29

Throttle position sensor main (1) and sub (2) signal

Measurement terminal	CH1: “C01-54” to “C01-58” CH2: “C01-40” to “C01-58”
Oscilloscope setting	CH1: 1 V/DIV, CH2: 1 V/DIV TIME: 200 ms/DIV
Measurement condition	• After warmed up to normal operating temperature • Ignition switch turned ON and depress accelerator pedal fully

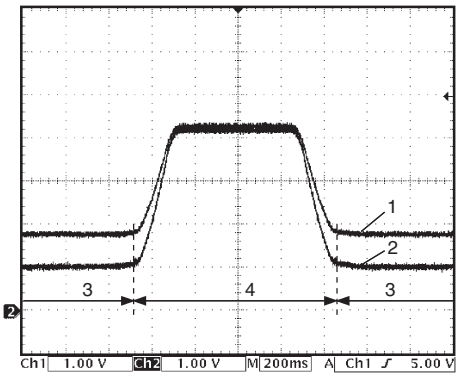

I5RW0C110023-01

3.	Accelerator pedal released
4.	Accelerator pedal depressed fully

Reference waveform No.30

Pedal position sensor main (1) and sub (2) signal

Measurement terminal	CH1: “E01-37” to “C01-58” CH2: “E01-36” to “C01-58”
Oscilloscope setting	CH1: 1 V/DIV, CH2: 1 V/DIV TIME: 100 ms/DIV
Measurement condition	• After warmed up to normal operating temperature • Ignition switch turned ON and depress accelerator pedal fully

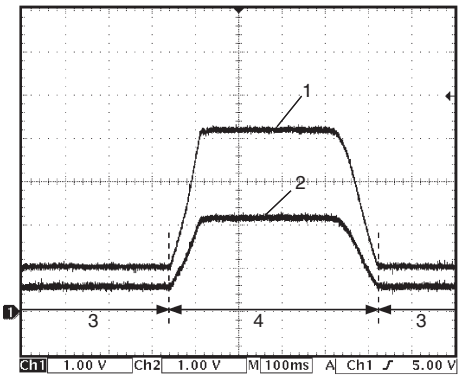

I5RW0C110024-01

3.	Accelerator pedal released
4.	Accelerator pedal depressed fully

Resistance Check

1) Remove ECM from its bracket referring to “Engine Control Module (ECM) Removal and Installation in Section 1C”.

⚠ CAUTION

Never touch terminals of ECM itself or connect voltmeter or ohmmeter (2).

2) Connect special tool to ECM connectors (1) securely.

NOTE

Do not connect the other connector of special tool to ECM.

Special tool
(A): 09933–06320

3) Check resistance between each pair of terminals of special tool connectors (1) as listed in the following table.

⚠ CAUTION

- **Be sure to connect ohmmeter probe from wire harness side of coupler.**
- **Be sure to turn OFF ignition switch for this check.**
- **Resistance in the following table represents that measured when parts temperature is 20 °C (68 °F).**

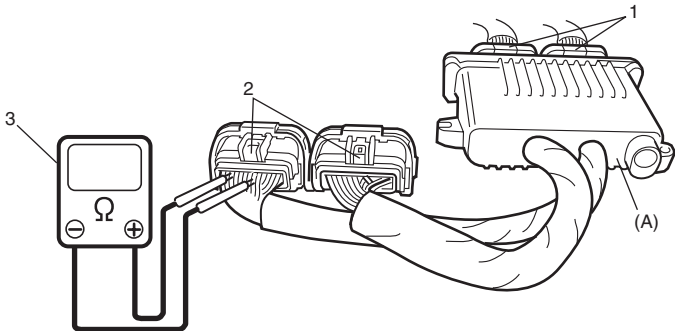

I7RW01110032-02

Terminals	Circuit	Standard resistance	Condition
C01-47 to E01-29	Heater of HO2S-2	4 – 15 Ω	—
E01-46 to E01-1/16	Radiator cooling fan relay No.1	160 – 240 Ω	—
E01-60 to E01-29	Main relay	160 – 240 Ω	Battery disconnected and ignition switch turned ON
E01-15 to E01-29	Fuel pump relay	160 – 240 Ω	—
C01-16 to E01-1/16	No.3 fuel injector	10.8 – 18.2 Ω	—
C01-17 to E01-1/16	No.4 fuel injector		
C01-4 to E01-1/16	EGR valve (stepping motor No.1 coil) (if equipped)	20 – 31 Ω	—
C01-29 to E01-1/16	EVAP canister purge valve	28 – 35 Ω	—
C01-2 to E01-1/16	No.2 fuel injector	10.8 – 18.2 Ω	—
C01-3 to E01-1/16	EGR valve (stepping motor No.2 coil) (if equipped)	20 – 31 Ω	—
C01-18 to E01-1/16	EGR valve (stepping motor No.4 coil) (if equipped)		
C01-19 to E01-1/16	EGR valve (stepping motor No.3 coil) (if equipped)		
C01-46 to E01-29	Heater of HO2S-1	2 – 11 Ω	—
C01-1 to E01-1/16	No.1 fuel injector	10.8 – 18.2 Ω	—
E01-29 to E01-47	A/C compressor relay (if equipped with A/C)	160 – 240 Ω	—
E01-58 to E01-1/16	A/C condenser cooling fan relay (if equipped with A/C)	160 – 240 Ω	—
C01-60 to C01-59	Oil control valve (for engine with VVT system)	6 – 15 Ω	—
E01-45 to E01-1/16	Throttle actuator control relay	160 – 240 Ω	—

ECM Power and Ground Circuit Check

S7RW0A1104077

Wiring Diagram

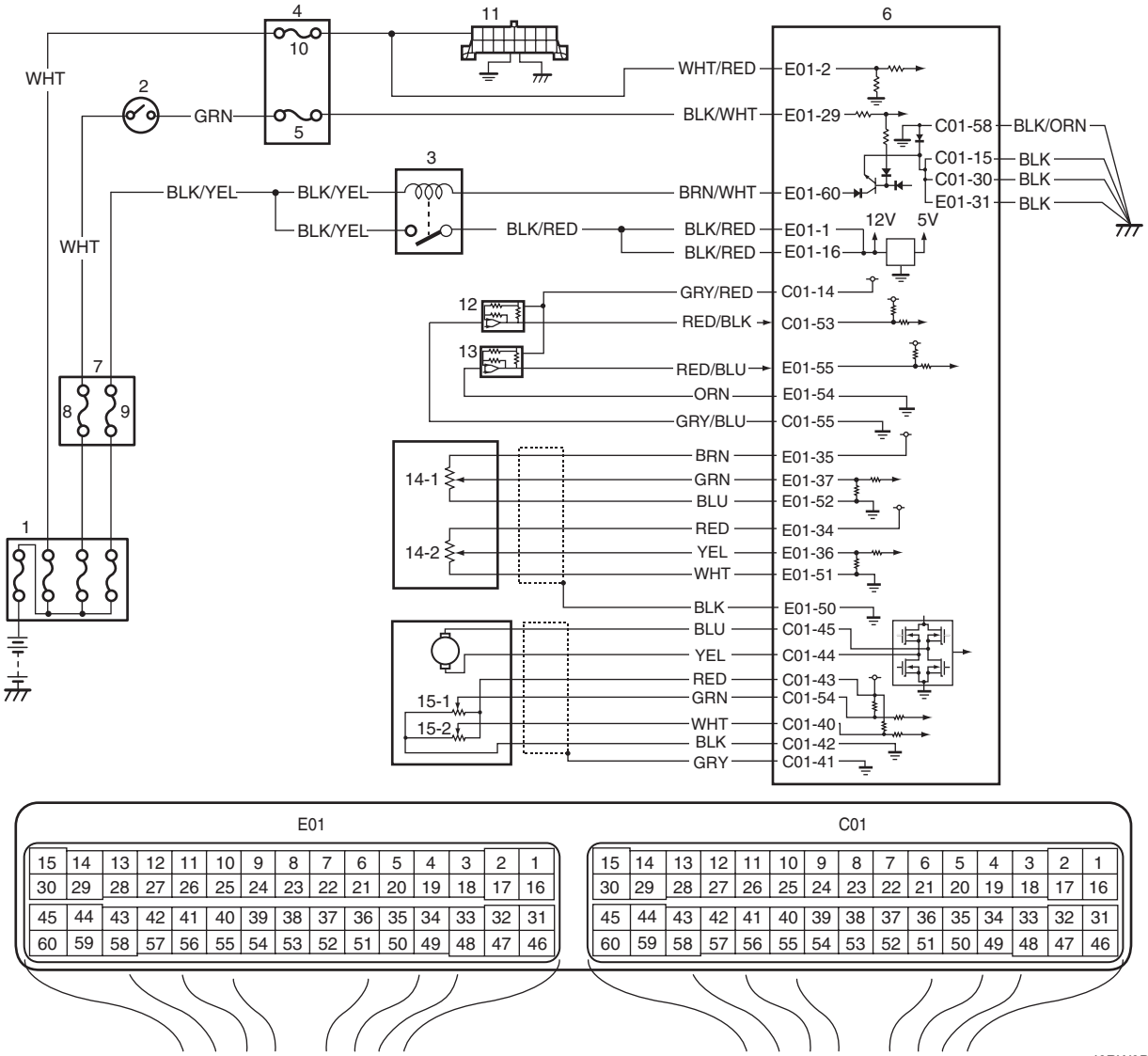

I6RW0D110052-01

1. Main fuse box	7. Individual circuit fuse box No.1	13. A/C refrigerant pressure sensor (if equipped with A/C)
2. Ignition switch	8. “IGN” fuse	14-1. APP sensor (main)
3. Main relay	9. “FI” fuse	14-2. APP sensor (sub)
4. BCM (included in junction block assembly)	10. “DOME” fuse	15-1. TP sensor (main)
5. “IG COIL” fuse	11. DLC	15-2. TP sensor (sub)
6. ECM	12. MAP sensor (if equipped)	

Circuit Description

When the ignition switch is turned ON, the main relay turns ON (the contact point closes) and the main power is supplied to ECM.

Troubleshooting

NOTE

- **Before performed trouble shooting, be sure to read the “Precautions of ECM Circuit Inspection”.**
- **When measuring circuit voltage, resistance and/or pulse signal at ECM connector, connect the special tool to ECM and/or the ECM connectors referring to “Inspection of ECM and Its Circuits”.**

Step	Action	Yes	No
1	**Circuit fuse check** 1) Disconnect connectors from ECM with ignition switch turned OFF. 2) Check for proper connection to ECM connector at “E01-2”, “E01-29”, “E01-60”, “E01-1”, “E01-16”, “E01-31”, “C01-58”, “C01-15” and “C01-30” terminals. 3) If OK, check “DOME” fuse and “IG COIL” fuse for blowing. *Are “DOME” fuse and “IG COIL” fuse in good condition?*	Go to Step 2.	Replace fuse (s) and check for short in circuits connected to fuse(s).
2	**Power supply circuit check** 1) Measure voltage between “E01-2” terminal of ECM connector and body ground. *Is voltage 10 – 14 V?*	Go to Step 3.	“WHT/RED” or “WHT” wire is open circuit.
3	**Ignition signal check** 1) Turn ignition switch to ON position. 2) Measure voltage between “E01-29” terminal of ECM connector and body ground. *Is voltage 10 – 14 V?*	Go to Step 4.	“BLK/WHT” or “GRN” wire is open circuit.
4	**Main relay circuit check** 1) Turn ignition switch to OFF position. 2) Check “FI” fuse (1) (15 A) in individual circuit fuse box No.1 for blowing. 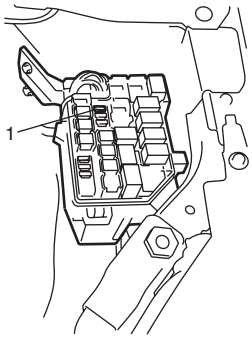 I5RW0A110058-02 3) If OK, measure voltage between “E01-60” terminal of ECM connector and body ground. *Is voltage 10 – 14 V?*	Go to Step 5.	Go to Step 9.
5	**Main relay circuit check** 1) Connect connectors to ECM with ignition switch turned OFF. 2) Turn ignition switch to ON position. 3) Measure voltage between “E01-60” terminal of ECM connector and body ground. *Is voltage 0 – 1 V?*	Go to Step 7.	Go to Step 6.

Step	Action	Yes	No
6	**ECM ground circuit check** 1) Turn ignition switch to OFF position. 2) Disconnect connectors from ECM. 3) Measure resistance between each “E01-31”, “C01-58”, “C01-15” and “C01-30” terminals of ECM connector and body ground. *Is resistance 1 Ω or less?*	Substitute a known-good ECM and recheck.	“BLK/ORN” or “BLK” wire is open or high resistance circuit.
7	**Main relay circuit check** 1) Disconnect connectors from ECM with ignition switch turned OFF. 2) Using service wire, ground “E01-60” terminal of ECM connector and measure voltage between each “E01-1” and “E01-16” terminals of ECM connector and body ground. *Is voltage 10 – 14 V?*	Go to Step 11.	Go to Step 8.
8	**Main relay circuit check** 1) Remove main relay (1) from individual circuit fuse box No.1. 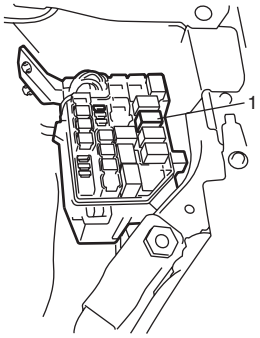 I5RW0A110059-02 2) Check for proper connection to main relay connector at “BLK/YEL” and “BLK/RED” wire terminals. 3) If OK, measure resistance between each “E01-1” and “E01-16” wire terminals of ECM connector and “BLK/RED” wire terminal of main relay connector. *Is resistance 1 Ω or less?*	Go to Step 9.	“BLK/RED” wire is open circuit or high resistance circuit.
9	**Main relay circuit check** 1) Remove main relay from individual circuit fuse box No.1 with ignition switch turned OFF. 2) Measure voltage between “BLK/YEL” wire terminal of main relay connector and body ground. *Is voltage 10 – 14 V?*	Go to Step 10.	“BLK/YEL” wire is open circuit.
10	**Main relay check** 1) Check main relay referring to “Main Relay, Fuel Pump Relay, Starting Motor Control Relay, Throttle Actuator Control Relay and Radiator Cooling Fan Relay Inspection in Section 1C”. *Is main relay in good condition?*	“BRN/WHT” wire is open or high resistance circuit.	Replace main relay.

Step	Action	Yes	No
11	**Sensor power source circuit check** 1) Connect connectors to ECM with ignition switch turned OFF. 2) Turn ON ignition switch, measure each voltage between “C01-14”, “E01-35”, “E01-34” and “C01-43” terminal of ECM connector and vehicle body ground. *Is each voltage 4 – 6 V?*	ECM power and ground circuit is in good condition.	Go to Step 12.
12	**Sensor power source circuit check** 1) Disconnect connectors from ECM, TP sensor, MAP sensor, A/C refrigerant pressure sensor (if equipped with A/C) and APP sensor with ignition switch turned OFF. 2) Measure each resistance between “C01-14”, “E01-35”, “E01-34” and “C01-43” terminal of ECM connector and vehicle body ground. *Is each resistance infinity?*	Check internal short circuit of TP sensor, MAP sensor, A/C refrigerant pressure sensor (if equipped with A/C) and/or APP sensor.	“GRY/RED”, “BRN” and/or “RED” wire is shorted to ground circuit.

Fuel Injector Circuit Check

S7RW0A1104078

Wiring Diagram

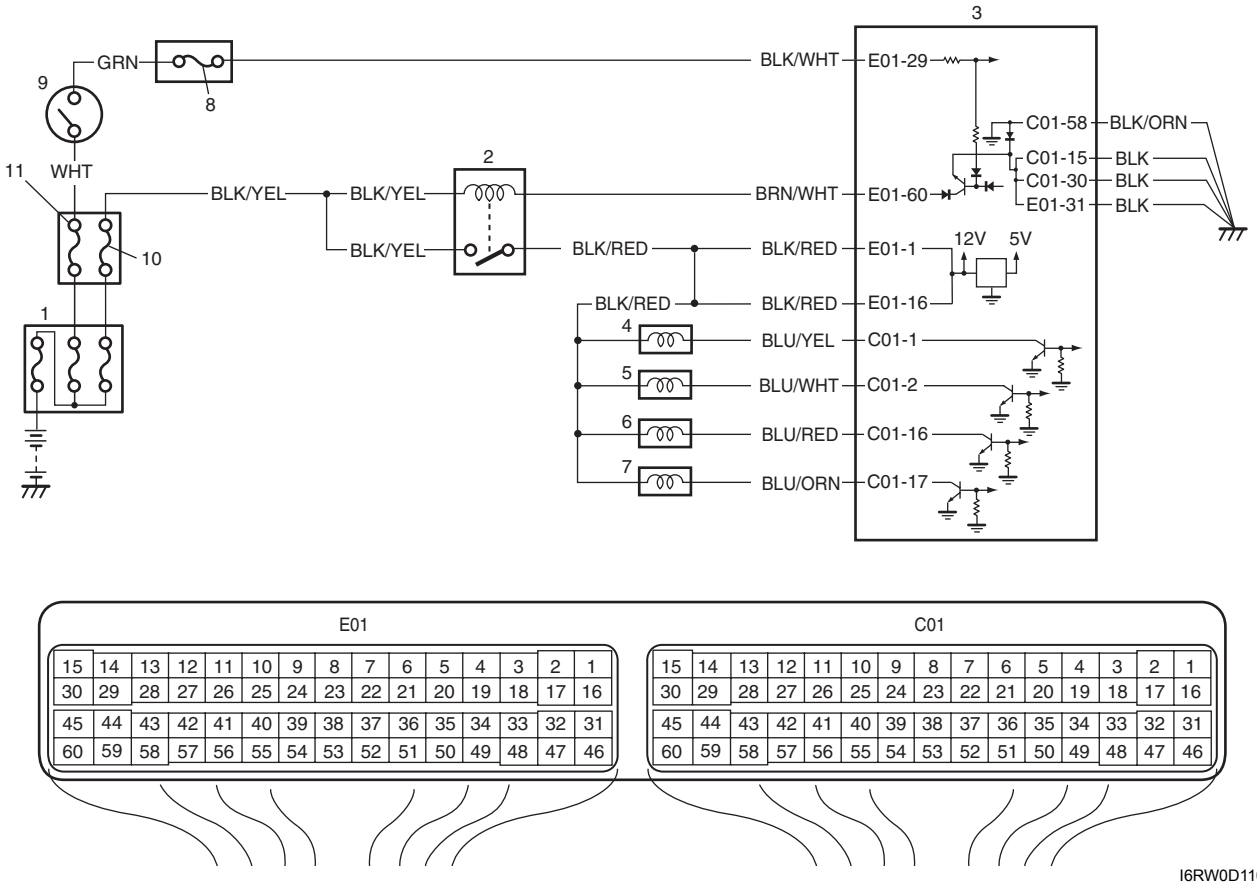

I6RW0D110053-01

1. Main fuse box	4. No.1 injector	7. No.4 injector	10. “FI” fuse
2. Main relay	5. No.2 injector	8. “IG COIL” fuse	11. “IGN” fuse
3. ECM	6. No.3 injector	9. Ignition switch	

Troubleshooting

NOTE

- **Before performed trouble shooting, be sure to read the "Precautions of ECM Circuit Inspection".**
- **When measuring circuit voltage, resistance and/or pulse signal at ECM connector, connect the special tool to ECM and/or the ECM connectors referring to "Inspection of ECM and Its Circuits".**

Step	Action	Yes	No
1	**Fuel injector check for operating sound** 1) Using sound scope, check each injector for operating sound at engine cranking. *Do all 4 injector make operating sound?*	Fuel injectors circuit is in good condition.	Go to Step 2.
2	**Fuel injector resistance check** 1) Disconnect connectors from fuel injectors with ignition switch turned OFF. 2) Check for proper connection to fuel injector at each terminals. 3) If OK, check all 4 fuel injectors for resistance referring to "Fuel Injector On-Vehicle Inspection in Section 1G". *Are all injectors in good condition?*	Go to Step 3.	Faulty fuel injector.
3	**Fuel injector insulation resistance check** 1) Check that there is insulation between each fuel injector terminal and engine ground. *Is there insulation?*	Go to Step 4.	Faulty fuel injector.
4	**Fuel injector power supply check** 1) Measure voltage between each "BLK/RED" wire terminal of fuel injector connector and engine ground with ignition switch turned ON. *Is voltage 10 – 14 V?*	Go to Step 5.	"BLK/RED" wire is open or shorted to ground circuit. If it is in good condition, go to "ECM Power and Ground Circuit Check".
5	**Wire circuit check** 1) Turn OFF ignition switch. 2) Disconnect connectors from ECM. 3) Measure resistance between each "BLU/YEL", "BLU/WHT", "BLU/RED", "BLU/ORN" wire terminal of fuel injector connector and vehicle body ground. *Is resistance infinity?*	Go to Step 6.	"BLU/YEL", "BLU/WHT", "BLU/RED" and/or "BLU/ORN" wire(s) are shorted to ground.
6	**Wire circuit check** 1) Measure voltage between each "BLU/YEL", "BLU/WHT", "BLU/RED", "BLU/ORN" wire terminal of fuel injector connector and vehicle body ground with ignition switch turned ON. *Is voltage 0 V?*	Go to Step 7.	"BLU/YEL", "BLU/WHT", "BLU/RED" and/or "BLU/ORN" wire(s) are shorted to power supply circuit.
7	**Fuel injector drive signal check** 1) Connect connectors to each fuel injector and ECM with ignition switch turned OFF. 2) Turn ON ignition switch. 3) Measure voltage between each "C01-1", "C01-2", "C01-16", "C01-17" terminal of ECM connector and vehicle body ground. *Is voltage 10 – 14 V?*	Check fuel injector referring to "Fuel Injector Inspection in Section 1G". If check result is satisfactory, substitute a known-good ECM and recheck.	"BLU/YEL", "BLU/WHT", "BLU/RED" and/or "BLU/ORN" wire(s) are open circuit.

Fuel Pump and Its Circuit Check

S7RW0A1104079

Wiring Diagram

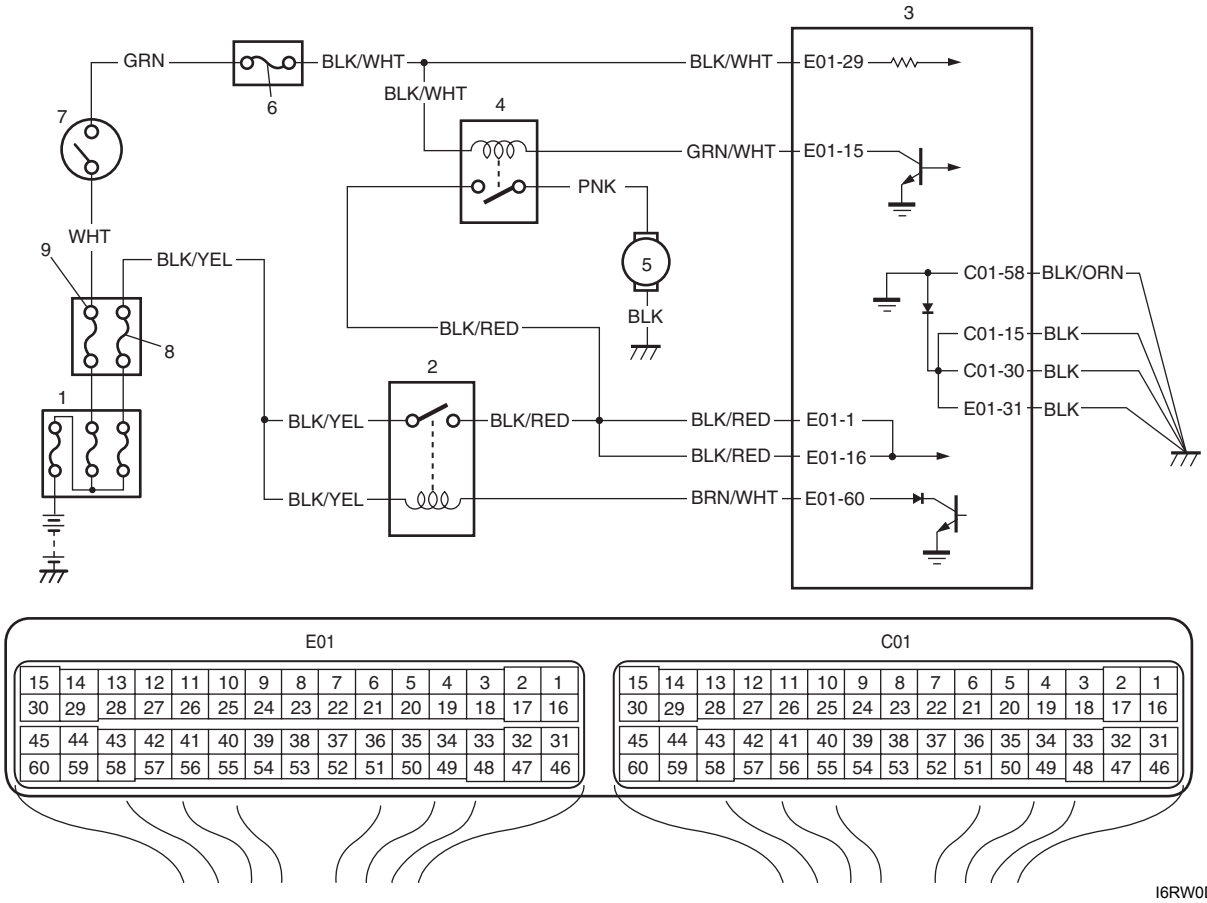

I6RW0D110054-01

1. Main fuse box	4. Fuel pump relay	7. Ignition switch
2. Main relay	5. Fuel pump	8. “FI” fuse
3. ECM	6. “IG COIL” fuse	9. “IGN” fuse

Troubleshooting

NOTE

- **Before performed trouble shooting, be sure to read the “Precautions of ECM Circuit Inspection”.**
- **When measuring circuit voltage, resistance and/or pulse signal at ECM connector, connect the special tool to ECM and/or the ECM connectors referring to “Inspection of ECM and Its Circuits”.**

Step	Action	Yes	No
1	**Fuel pump control system check for operation** *Is fuel pump heard to operate 2 sec. after ignition switch is turned ON?* 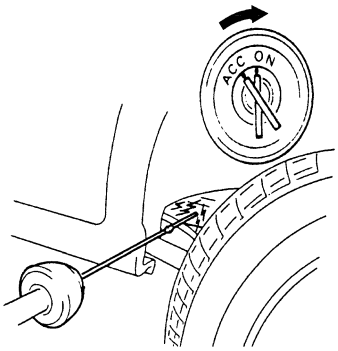 I2RH01110132-01	Fuel pump circuit is in good condition.	Go to Step 2.
2	**Fuel pump relay power supply check** 1) Disconnect fuel pump relay from individual circuit fuse box No.1 with ignition switch turned OFF. 2) Check for proper connection to fuel pump relay at each terminal. 3) If OK, turn ON ignition switch, measure voltage between “BLK/WHT” wire terminal of fuel pump relay connector and engine ground. *Is voltage 10 – 14 V?*	Go to Step 3.	“BLK/WHT” wire is open or shorted to ground circuit.
3	**Fuel pump relay power supply check** 1) Turn ON ignition switch, measure voltage between “BLK/RED” wire terminal of fuel pump relay connector and engine ground. *Is voltage 10 – 14 V?*	Go to Step 4.	“BLK/RED” wire is open circuit.
4	**Fuel pump relay check** 1) Check fuel pump relay referring to “Main Relay, Fuel Pump Relay, Starting Motor Control Relay, Throttle Actuator Control Relay and Radiator Cooling Fan Relay Inspection in Section 1C”. *Is relay in good condition?*	Go to Step 5.	Faulty relay.
5	**Fuel pump relay drive signal check** 1) Connect fuel pump relay to individual circuit fuse box No.1. 2) Connect voltmeter between “E01-15” terminal of ECM connector and vehicle body ground. 3) Measure voltage 2 second after ignition switch is turned ON. *Is voltage 10 – 14 V?*	Go to Step 6.	“GRN/WHT” wire is open circuit or shorted to ground circuit.

Step	Action	Yes	No
6	**Fuel pump relay drive signal check** 1) Measure voltage within 2 second after ignition switch is turned ON. *Is voltage 0 – 1 V?*	Go to Step 7.	Substitute a known-good ECM and recheck.
7	**Wire circuit check** 1) Turn OFF ignition switch. 2) Detach fuel tank referring to “Fuel Tank Removal and Installation in Section 1G”. 3) Disconnect connector from fuel pump. 4) Measure resistance between “PNK” wire terminal of fuel pump connector and vehicle body ground. *Is resistance infinity?*	Go to Step 8.	“PNK” wire is shorted to ground.
8	**Fuel pump circuit check** 1) Connect service wire between “E01-15” terminal of ECM connector and vehicle body ground. 2) Turn ON ignition switch, measure voltage between “PNK” terminal at fuel pump connector and vehicle body ground. *Is voltage 10 – 14 V?*	Go to Step 9.	“PNK” wire is open circuit.
9	**Fuel pump circuit check** 1) Turn OFF ignition switch. 2) Measure resistance between “BLK” wire terminal at fuel pump connector and vehicle body ground. *Is resistance less than 5 Ω?*	Faulty fuel pump.	“BLK” wire is open circuit.

Fuel Pressure Check

S7RW0A1104080

System Diagram

Special tool
(A): 09912–58442
(B): 09912–58432
(C): 09912–58490

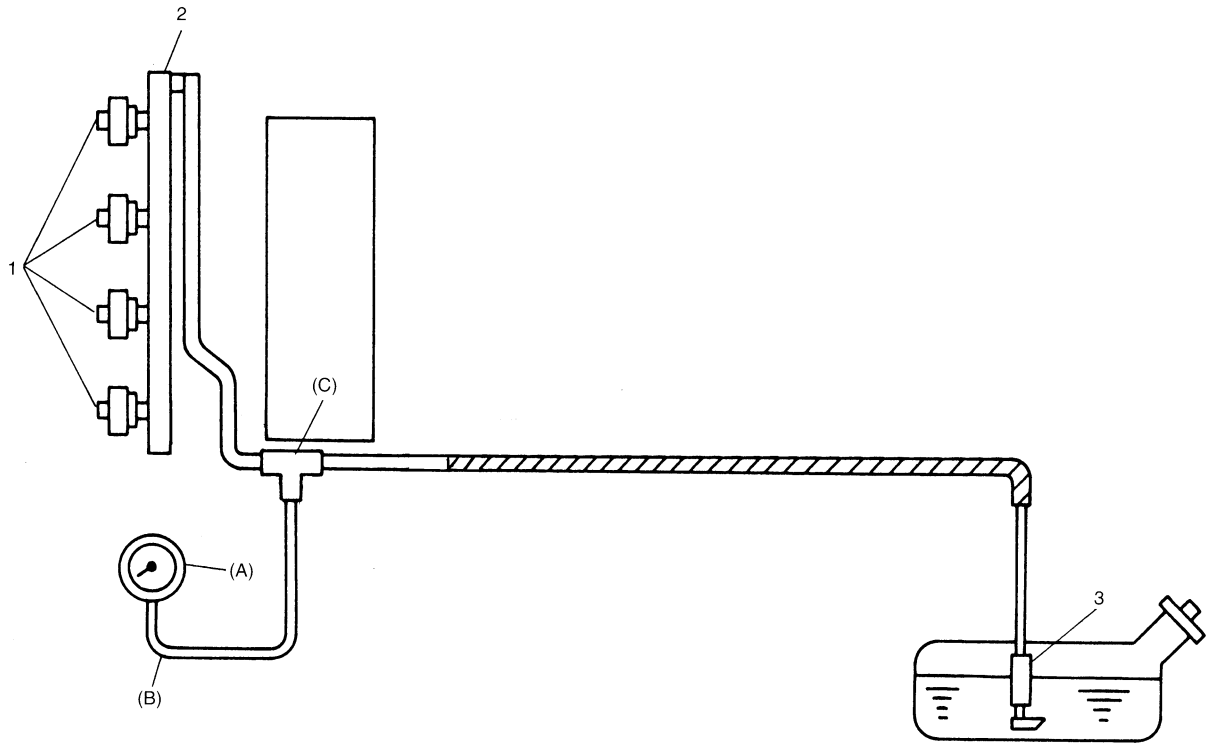

I3RM0A110081-01

1. Injector	2. Delivery pipe	3. Fuel filter and fuel pump

Troubleshooting

NOTE

Before using following flow, check to make sure that battery voltage is higher than 11 V. If battery voltage is low, pressure becomes lower than specification even if fuel pump and line are in good condition.

Step	Action	Yes	No
1	**Fuel pressure check** 1) Check fuel pressure referring to “Fuel Pressure Inspection in Section 1G”. *Is check result satisfactory?*	Go to Step 2.	Go to Step 5.
2	**Fuel pressure check** 1) Start engine and warm it up to normal operating temperature. 2) Keep engine speed at 4000 rpm. *Does fuel pressure show about the same value as Step 1?*	Go to Step 3.	Go to Step 8.
3	**Fuel line check** 1) Check fuel pipe, fuel hose and joint for fuel leakage. *Are they in good condition?*	Go to Step 4.	Repair or replace defective part.

Step	Action	Yes	No
4	**Fuel line check** 1) Check fuel pipe, fuel hose and joint for damage or deform. *Are they in good condition?*	Faulty fuel pressure regulator.	Repair or replace damaged or damaged part.
5	*Was fuel pressure higher than specification in Step 1?*	Go to Step 6.	Go to Step 7.
6	**Fuel line check** 1) Check fuel pipe, fuel hose and joint for damage or deform. *Are they in good condition?*	Faulty fuel pressure regulator.	Repair or replace damaged or damaged part.
7	**Fuel pump operating sound check** 1) Remove fuel filler cap and then turn ON ignition switch. *Can you hear operating sound?*	Go to Step 8.	Faulty fuel pump.
8	**Fuel line check** 1) Check fuel pipe, fuel hose and joint for damage or deform. *Are they in good condition?*	Clogged fuel filter, faulty fuel pump, faulty fuel pressure regulator or fuel leakage from hose connection in fuel tank.	Repair or replace defective part.

A/C Condenser Cooling Fan Control System Inspection

S7RW0A1104081

Wiring Diagram

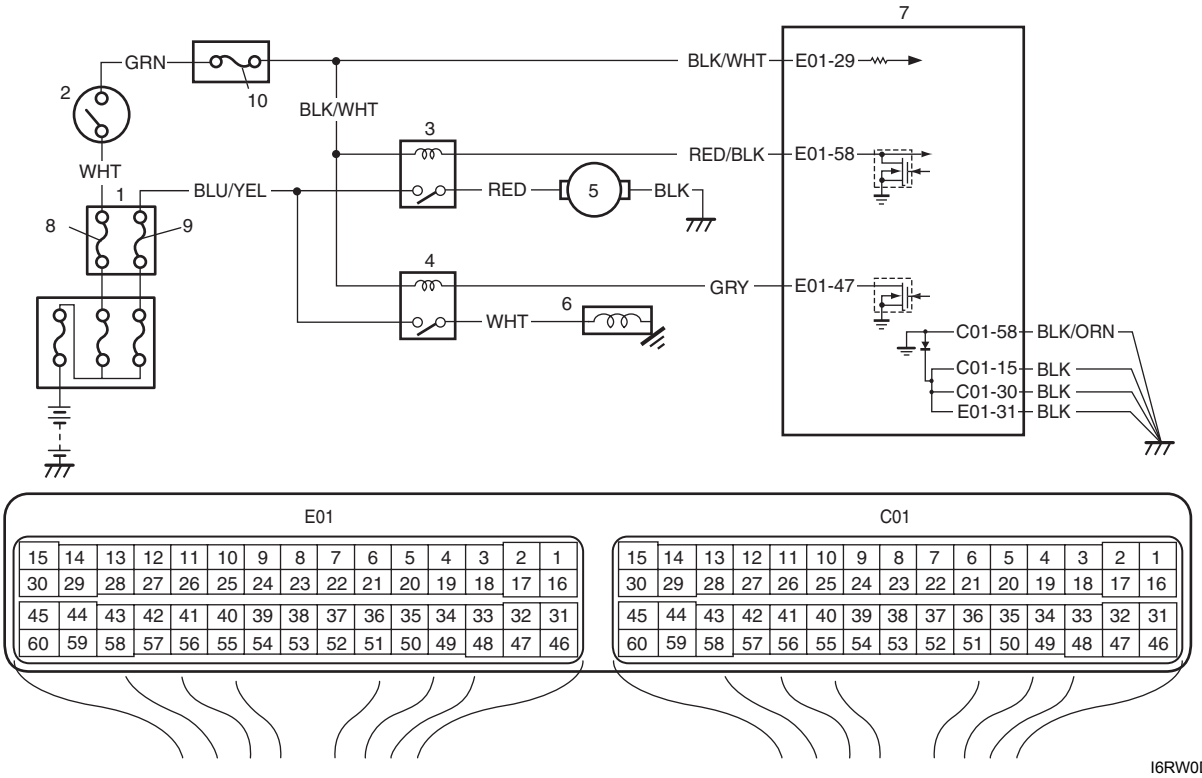

I6RW0D110055-01

1. Individual circuit fuse box No.1	5. A/C condenser cooling fan motor	9. “A/C” fuse
2. Ignition switch	6. A/C compressor	10. “IG COIL” fuse
3. A/C condenser cooling fan relay	7. ECM	
4. A/C compressor relay	8. “FI” fuse	

Troubleshooting

Step	Action	Yes	No
1	**Check A/C condenser fan control system** *Is A/C condenser fan started when A/C is operating?*	Intermittent trouble. Check for intermittent referring to “Intermittent and Poor Connection Inspection in Section 00”.	Go to Step 2.
2	**Check A/C condenser fan relay and its circuit** 1) Connect scan tool to DLC with ignition switch OFF. 2) Check pending DTC and DTC with scan tool. *Is DTC P0481 displayed?*	Go to “DTC P0481: Cooling Fan 2 (A/C Condenser Fan) Control Circuit”.	Go to Step 3.
3	**Check A/C refrigerant** 1) Check amount of A/C refrigerant referring to “A/C System Performance Inspection: Manual Type in Section 7B”. *Is it good condition?*	Go to Step 4.	Recharge refrigerant.
4	**Check wire circuit** 1) Disconnect A/C condenser cooling fan control relay from individual circuit fuse box No.1 with ignition switch turned OFF. 2) Turn ON ignition switch, measure voltage between engine ground and “BLU/YEL” wire terminal of A/C condenser cooling fan control relay connector. *Is voltage 10 – 14V?*	Go to Step 7.	Go to Step 5.
5	**Check wire circuit** 1) Disconnect A/C compressor control relay from individual circuit fuse box No.1 with ignition switch turn OFF. 2) Turn ON ignition switch, measure voltage between engine ground and “BLU/YEL” wire terminal of A/C compressor control relay connector. *Is voltage 10 – 14 V?*	Faulty A/C compressor control relay.	Go to Step 6.
6	**Check wire circuit** 1) Remove “A/C” fuse “20 A” from individual circuit fuse box No.1 with ignition switch turned OFF. 2) Measure resistance between “BLU/YEL” wire terminal of main fuse connector and engine ground. *Is resistance infinity?*	Open wire in “BLU/YEL” circuit. If OK, go to Step 7.	“BLU/YEL” wire shorted to ground circuit.
7	**Check wire circuit** 1) Disconnect connector from A/C condenser cooling fan with ignition switch tun OFF. 2) Measure resistance between engine ground and “RED” wire terminal of A/C condenser fan connector. *Is resistance infinity?*	Go to Step 8.	“RED” wire shorted to ground circuit.
8	**Check A/C condenser cooling fan control relay** 1) Check A/C condenser cooling fan control relay referring to “A/C System Relay Inspection: Manual Type in Section 7B”. *Is result in good condition?*	Go to Step 9.	Replace relay.

Step	Action	Yes	No
9	**Check wire circuit** 1) Install “A/C” fuse “20 A” to individual circuit fuse box No.1. 2) Connect A/C condenser cooling fan control relay to individual circuit fuse box No.1 with ignition switch turn OFF. 3) Start engine then turn ON A/C switch and blower motor switch. 4) Measure voltage between engine ground and “RED” wire terminal in A/C condenser fan harness connector. *Is voltage 10 – 14 V?*	Go to Step 10.	Open wire in “RED” circuit.
10	**Check wire circuit** 1) Disconnect connector from A/C condenser cooling fan with ignition switch turned OFF. 2) Measure resistance between “BLK” wire terminal of A/C condenser cooling fan connector and engine ground. *Is resistance below 1 Ω?*	Go to Step 11.	Open or high resistance wire in “BLK” circuit.
11	**Check A/C condenser cooling fan** 1) Check A/C condenser cooling fan operates referring to “Condenser Cooling Fan Inspection: Manual Type in Section 7B”. *Is it good condition?*	Substitute a known-good ECM and recheck.	Faulty A/C condenser cooling fan.

A/C System Circuits Check

S7RW0A1104082

Wiring Diagram

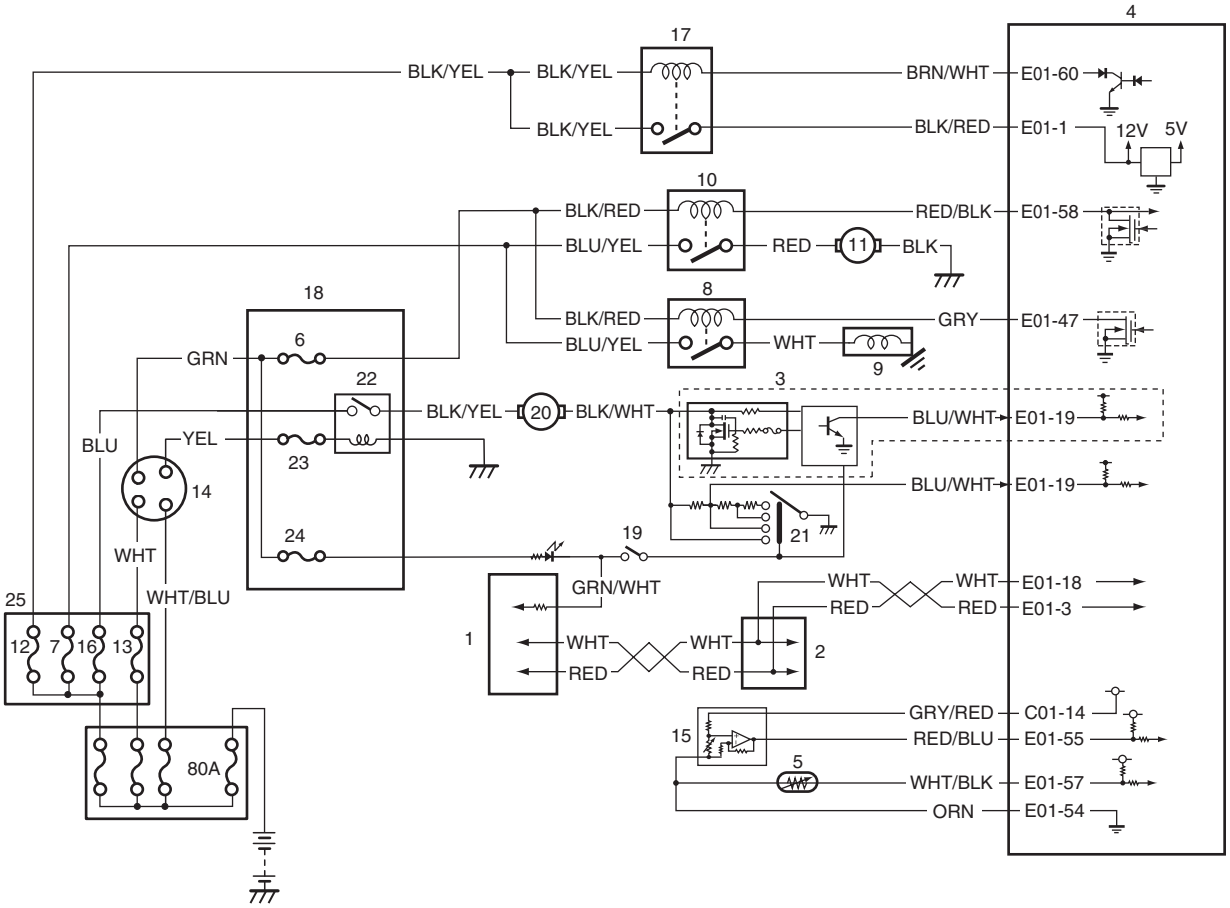

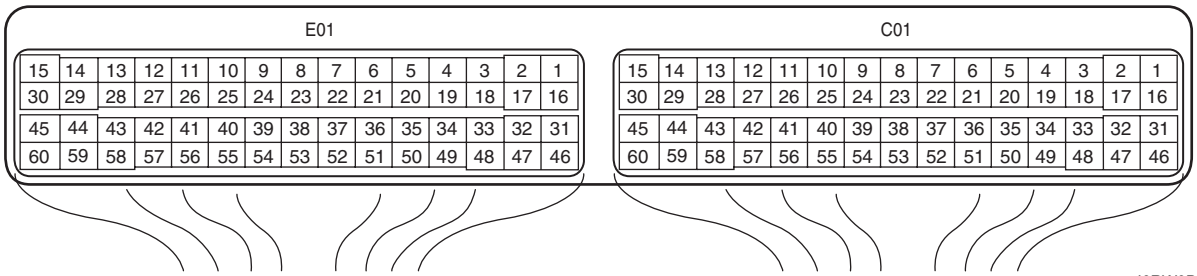

I6RW0D110056-01

1. BCM	10. A/C condenser cooling fan motor relay	19. A/C switch
2. ABS / ESP® control module	11. A/C condenser cooling fan motor	20. Blower motor
3. Blower speed selector (Auto A/C model)	12. “FI” fuse	21. Blower speed selector (Manual A/C model)
4. ECM	13. “IGN” fuse	22. Blower motor relay
5. A/C evaporator outlet air temp. sensor (Manual A/C model)	14. Ignition switch	23. “IG2 SIG” fuse
6. “IG COIL” fuse	15. A/C refrigerant pressure sensor	24. “BACK” fuse
7. “A/C” fuse	16. “BLW” fuse	25. Individual circuit fuse box No.1
8. A/C compressor relay	17. Main relay	
9. A/C compressor	18. Junction block assembly	

Troubleshooting

NOTE

- **Before performed trouble shooting, be sure to read the "Precautions of ECM Circuit Inspection".**
- **When measuring circuit voltage, resistance and/or pulse signal at ECM connector, connect the special tool to ECM and/or the ECM connectors referring to "Inspection of ECM and Its Circuits".**
- **When A/C evaporator outlet air temp. is below 2.5 °C (36.5 °F), A/C remains OFF ("E01-47" terminal voltage becomes 10 – 14 V). This condition is not abnormal.**

Step	Action	Yes	No
1	**Reception data check from BCM** 1) Connect scan tool to DLC with ignition switch turned OFF. 2) Turn ON ignition switch. 3) Check DTC for CAN-DTC. *Is there CAN-DTC?*	Go to "Troubleshooting for CAN-DTC".	Go to Step 2.
2	**A/C switch signal circuit check** 1) Start engine and select "Data List" mode on scan tool. 2) Check A/C switch signal under following conditions respectively. **A/C switch signal** **Engine running, A/C switch OFF: OFF** **Engine running, A/C switch ON and blower speed selector turned 1st position or more: ON** *Is check result satisfactory?*	Go to Step 3.	Check A/C switch circuit.
3	**DTC check of ECT sensor circuit** 1) Check ECM for DTC of ECT sensor circuit. *Is there DTC P0116, DTC P0117 or DTC P0118?*	Go to applicable DTC diag. flow.	Go to Step 4.
4	**A/C condenser cooling fan control system check** *Is A/C condenser cooling fan started when A/C and blower speed selector switch are turned ON with engine running?*	Go to Step 10.	Go to Step 5.
5	**A/C condenser cooling fan control circuit check** 1) Check DTC with scan tool. *Is DTC P0481 displayed?*	Go to "DTC P0481: Cooling Fan 2 (A/C Condenser Fan) Control Circuit".	Go to Step 6.

Step	Action	Yes	No
6	**A/C evaporator outlet air temp. sensor check** 1) Disconnect connectors from ECM with ignition switch turned OFF. 2) Check for proper connection to “E01-57” and “E01-54” wire terminals of ECM connector. 3) If OK, measure resistance between “E01-57” and “E01-54” wire terminals of ECM connector. **<u>Evaporator temp. sensor resistance</u>** **At 0 °C: 6.3 – 6.9 kΩ** **At 25 °C: 1.8 – 2.2 kΩ** 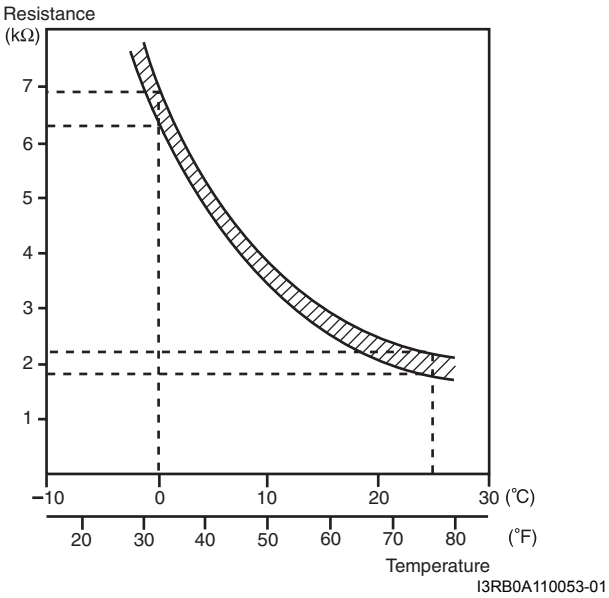 *Is resistance within specification?*	Go to Step 7.	Faulty A/C evaporator outlet air temp. sensor or its circuit.
7	**DTC check of A/C refrigerant pressure sensor circuit** 1) Connect scan tool to DLC with ignition switch turned OFF. 2) Turn ON ignition switch. 3) Check ECM for DTC of A/C refrigerant pressure sensor circuit. *Is there DTC P0532 or DTC P0533?*	Go to applicable DTC diag. flow.	Go to Step 8.
8	**A/C refrigerant pressure sensor voltage check** 1) Check A/C refrigerant pressure sensor voltage referring to “Inspection of ECM and Its Circuits”. *Is voltage within specified value?*	Go to Step 9.	Check amount of refrigerant. If OK, replace A/C refrigerant pressure sensor.
9	**A/C condenser cooling fan check** 1) Check A/C condenser cooling fan referring to “Condenser Cooling Fan Inspection: Manual Type in Section 7B”. *Is check result satisfactory?*	A/C condenser cooling fan drive circuit malfunction. If circuit is OK, go to Step 6.	Replace A/C condenser cooling fan motor.
10	**A/C compressor control system check** *Is A/C compressor started when A/C and blower speed selector switch are turned ON with engine running?*	A/C system is in good condition.	Go to Step 11.

Step	Action	Yes	No
11	**A/C compressor relay circuit check** 1) Measure voltage between “E01-47” wire terminal of ECM connector and vehicle body ground under following conditions respectively. **Voltage between “E01-47” terminal of ECM connector and ground** **While engine running and A/C switch turned OFF: 10 – 14 V** **While engine running, A/C and blower speed selector switch turned ON: 0 – 1 V** *Is check result satisfactory?*	Go to Step 12.	Go to Step 13.
12	**A/C compressor relay check** 1) Check A/C compressor relay referring to “Compressor Relay Inspection: Automatic Type in Section 7B”. *Is it in good condition?*	A/C compressor drive circuit malfunction.	Replace A/C compressor relay.
13	**A/C compressor relay circuit check** 1) Remove A/C compressor relay with ignition switch turned OFF. 2) Turn ON ignition switch, measure voltage between “BLK/WHT” wire terminal of A/C compressor relay connector and vehicle body ground. *Is voltage 10 –14 V?*	Go to Step 14.	“BLK/WHT” wire is open circuit.
14	**A/C compressor relay check** 1) Check A/C compressor relay referring to “Compressor Relay Inspection: Automatic Type in Section 7B”. *Is it in good condition?*	“GRY” wire is open circuit. If OK, substitute a known-good ECM and recheck.	Replace A/C compressor relay.

Electric Load Signal Circuit Check

S7RW0A1104083

Wiring Diagram

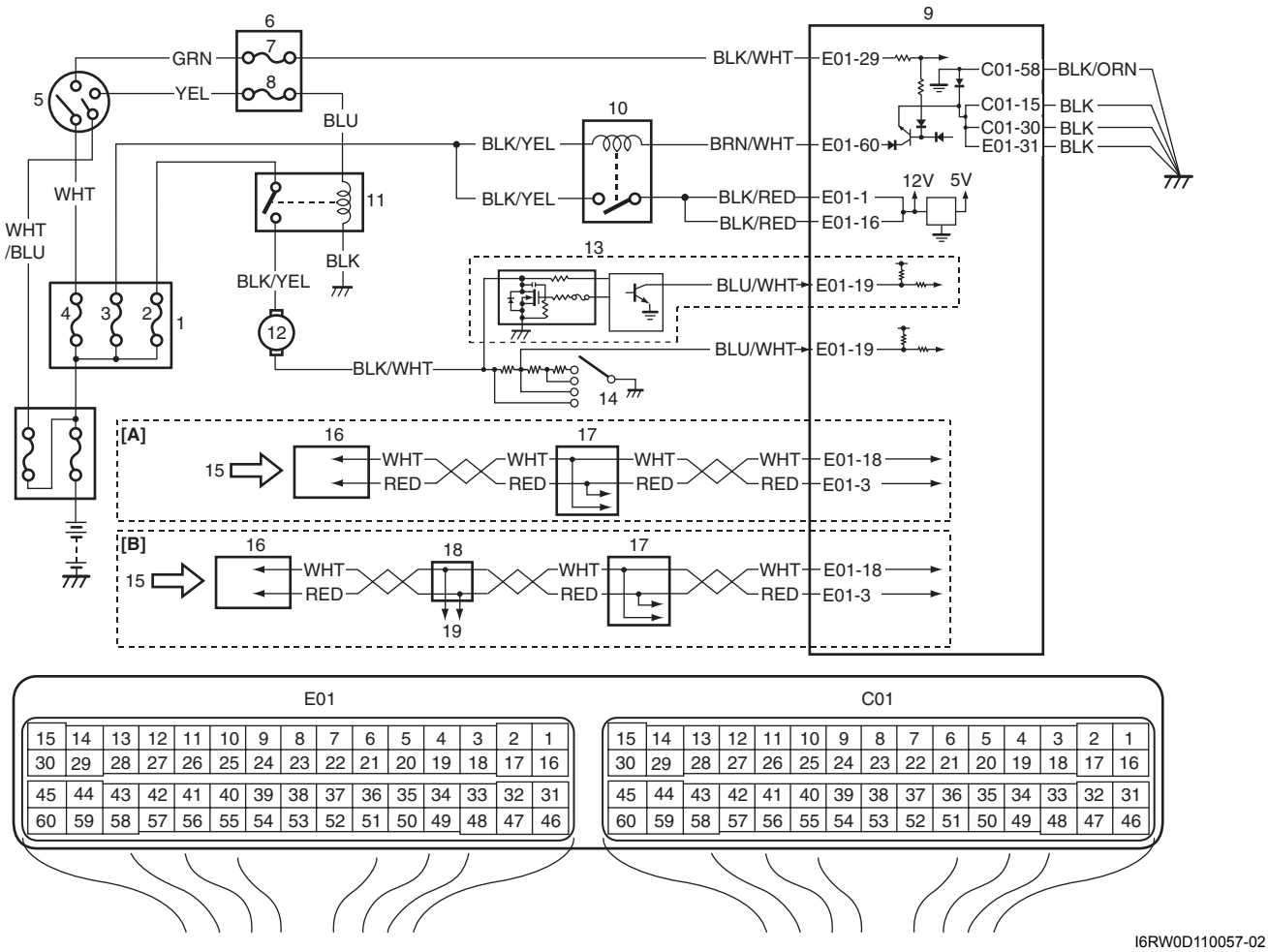

I6RW0D110057-02

[A]: Junction block with BCM model	6. Junction block assembly	13. Blower speed selector (Auto A/C model)
[B]: Junction block without BCM model	7. “IG COIL” fuse	14. Blower speed selector (Manual A/C model)
1. Individual circuit fuse box No.1	8. “IG2 SIG” fuse	15. Electric load signal (rear defogger signal and headlight signal), etc.
2. “BLW” fuse	9. ECM	16. BCM
3. “FI” fuse	10. Main relay	17. ABS / ESP® control module
4. “IGN” fuse	11. Blower motor relay	18. CAN junction connector
5. Ignition switch	12. Blower motor	19. To other control module connected CAN

Troubleshooting

NOTE

- **Before performed trouble shooting, be sure to read the "Precautions of ECM Circuit Inspection".**
- **When measuring circuit voltage, resistance and/or pulse signal at ECM connector, connect the special tool to ECM and/or the ECM connectors referring to "Inspection of ECM and Its Circuits".**

Step	Action	Yes	No
1	**DTC check** 1) Connect scan tool to DLC with ignition switch turned OFF. 2) Turn ON ignition switch and check DTC. *Is there DTC U0073 and/or U0140?*	Go to applicable DTC diag. flow.	Go to Step 2.
2	**Electric load signal circuit check** 1) Start engine and select "Data List" mode on scan tool. 2) Check electric load signal under following conditions respectively. **<u>Blower fan signal (Manual A/C model)</u>** **Blower speed selector turned OFF, 1st or 2nd position: OFF** **Blower speed selector turned to 3rd position or more: ON** **<u>Blower fan signal (Automatic A/C model)</u>** **Blower speed selector OFF or 1st position: OFF** **Blower speed selector turned to 3rd position or more: ON** **<u>Radiator fan signal</u>** **Engine coolant temperature is lower than 100 °C (212 °F): OFF** **Engine coolant temperature is higher than 100 °C (212 °F): ON** **<u>Electric load signal</u>** **Engine running, rear defogger switch, small light or headlight switch OFF: OFF** **Engine running, rear defogger switch, small light or headlight switch ON: ON** *Is check result satisfactory?*	Electric load signal circuit is in good condition.	Check defective signal circuit.

Radiator Cooling Fan Control System Check

S7RW0A1104084

Wiring Diagram

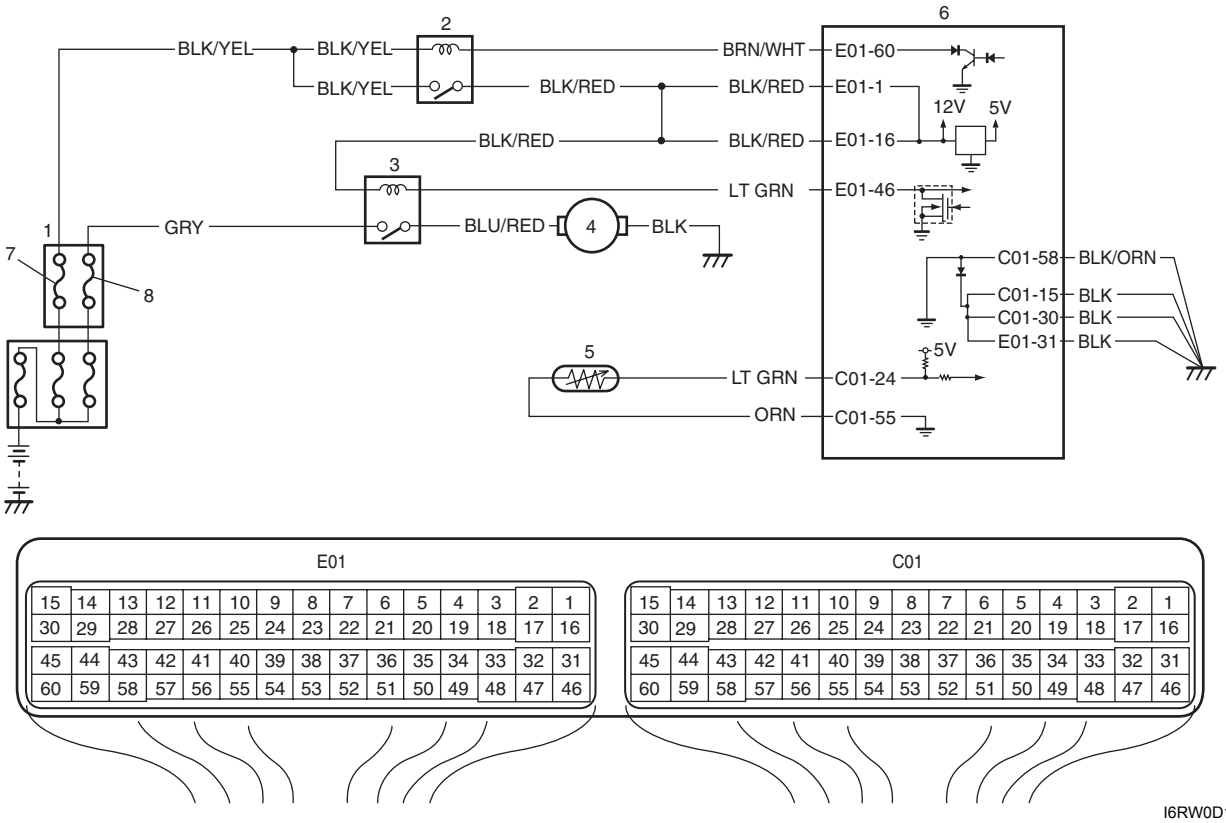

I6RW0D110058-01

1. Individual circuit fuse box No.1	3. Radiator cooling fan relay	5. ECT sensor	7. “FI” fuse
2. Main relay	4. Radiator cooling fan motor	6. ECM	8. “RDTR” fuse

Troubleshooting

⚠ WARNING

Keep hands, tools, and clothing away from radiator cooling fan to help prevent personal injury. This fan is electric and can come on whether or not the engine is running. The fan can start automatically in response to the ECT sensor with the ignition switch at the “ON” position.

NOTE

- **Before performed trouble shooting, be sure to read the “Precautions of ECM Circuit Inspection”.**
- **When measuring circuit voltage, resistance and/or pulse signal at ECM connector, connect the special tool to ECM and/or the ECM connectors referring to “Inspection of ECM and Its Circuits”.**

Step	Action	Yes	No
1	*Is there DTC(s) of ECT sensor circuit (DTC P0116 / P0117 / P0118) and/or radiator cooling fan circuit (DTC P0480)?*	Go to corresponding DTC flow.	Go to Step 2.
2	**Radiator cooling fan control circuit check** 1) Connect scan tool to DLC with ignition switch turned OFF. 2) Start engine and select “Data List” on scan tool. 3) Warm up engine until coolant temp. is 100 °C, 212 °F or higher and A/C switch turns OFF (if equipped with A/C). (If engine coolant temp. dose not rise, check engine cooling system or ECT sensor.) *Is radiator cooling fan started when engine coolant temp. reached above temp.?*	Radiator cooling fan control system is in good condition.	Perform from Step 2 to Step 7 in DTC P0480 diag. flow. If OK, Go to Step 3.
3	**Radiator cooling fan control check** 1) Disconnect radiator cooling fan motor connector with ignition switch turned OFF. 2) Run engine when ECT is over 100 °C, 212 °F. 3) Measure voltage between vehicle body ground and “BLU/RED” wire terminal of disconnected radiator cooling fan motor connector. *Is voltage 10 – 14 V?*	Go to Step 4.	“BLU/RED” wire is open or high resistance circuit.
4	**Check radiator cooling fan wire circuit check** 1) Turn ignition switch to OFF position. 2) Measure resistance between “BLK” wire terminal of disconnected radiator cooling fan motor connector and vehicle body ground. *Is resistance below 1 Ω?*	Go to Step 5.	“BLK” wire is open or high resistance circuit.
5	**Radiator cooling fan check** 1) Check radiator cooling fan referring to “Radiator Cooling Fan Assembly On-Vehicle Inspection in Section 1F”. *Is it in good condition?*	Substitute a known-good ECM and recheck.	Faulty radiator cooling fan.

Repair Instructions

Idle Speed and IAC Throttle Valve Opening Inspection

S7RW0A1106001

Before idle speed check, make sure of the following.

- Lead wires and hoses of electronic fuel injection and engine and emission control systems are connected securely.
- Valve lash is checked according to maintenance schedule.
- Ignition timing is within specification.
- All accessories (wipers, heater, lights, A/C, etc.) are out of service.
- Air cleaner has been properly installed and is in good condition.
- No abnormal air drawn in from air intake system.

After all items are confirmed, check idle speed and IAC throttle opening as follows.

NOTE

Before starting engine, place transmission gear shift lever in “Neutral”, and set parking brake and block drive wheels.

1) Connect SUZUKI scan tool to DLC (1) with ignition switch turned OFF.

   Special tool
   (A): SUZUKI scan tool (SUZUKI-SDT)

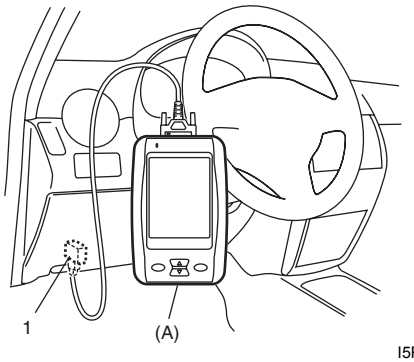

I5RW0C110011-01

2) Warm up engine to normal operating temperature.
3) Check engine idle speed and “IAC throttle opening” by using “Data List” mode on scan tool to check “IAC throttle opening”.
4) If check result is out of specification, inspect electric throttle body assembly referring to “Electric Throttle Body Assembly On-Vehicle Inspection in Section 1C”.

   Engine idle speed
   A/C OFF: 700 ± 50 rpm (IAC duty: 5 – 25%)
   A/C ON: 750 ± 50 rpm

5) Check that specified engine idle speed is obtained with A/C turned ON if vehicle is equipped with A/C. If not, check A/C system referring to “A/C System Circuits Check”.

Special Tools and Equipment

Special Tool

S7RW0A1108001

09912–58432 Fuel pressure gauge hose This tool is included in fuel pressure gauge set (09912-58413).☞ 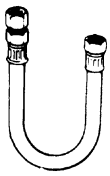	09912–58442 Fuel pressure gauge This tool is included in fuel pressure gauge set (09912-58413).☞
09912–58490 3-way joint & hose ☞ 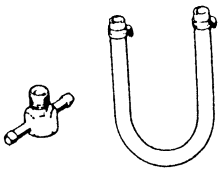	09933–06320 ECM check harness (120P) ☞ / ☞ 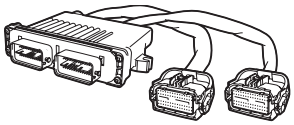
SUZUKI scan tool (SUZUKI-SDT) — This kit includes following items. 1. SUZUKI-SDT 2. DLC3 cable 3. USB cable 4. AC/DC power supply 5. Voltage meter probe 6. Storage case☞ / ☞ 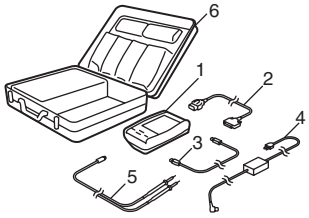	

Aux. Emission Control Devices

Diagnostic Information and Procedures

EGR System Inspection (If Equipped)

S7RW0A1204001

1) Connect SUZUKI scan tool to data link connector (DLC) (1) with ignition switch turned OFF.
2) Turn ON ignition switch and erase DTC using “Delete” in “DTC” menu of scan tool.
3) Start engine and warm it up to normal operating temperature, then select “Data List” mode on scan tool.
4) Make sure that vehicle condition is as follows.
   - Vehicle speed = 0 km/h (0 KPH)
   - Engine speed ≤ 900 rpm
   - Engine coolant temp. ≥ 90 °C, 164 °F
5) With engine idling (without depressing accelerator pedal), open EGR valve by using “Step EGR Control” mode in “Engine / Active Test” menu. In this state, as EGR valve opening increases engine idle speed drops. If not, possible cause is clogged EGR gas passage, stuck or faulty EGR valve.

   Special tool
   (A): SUZUKI scan tool (SUZUKI-SDT)

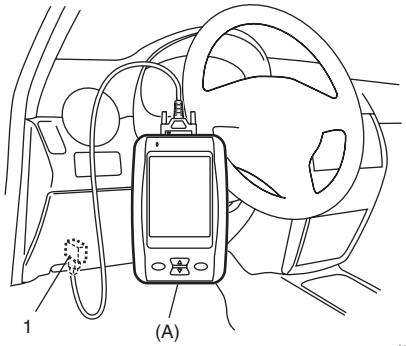

I5RW0C110011-01

Repair Instructions

EVAP Canister Purge Inspection

S7RW0A1206001

NOTE

Before inspection, check to make sure that gear shift lever is in neutral position and that parking brake lever is pulled all the way up.

1) Disconnect purge hose (1) from purge pipe.
2) Place finger against the end of disconnected hose and check that vacuum is not felt there when engine is cool and running at idle speed. If check result is not satisfactory, check EVAP canister purge valve, wire harness and ECM.

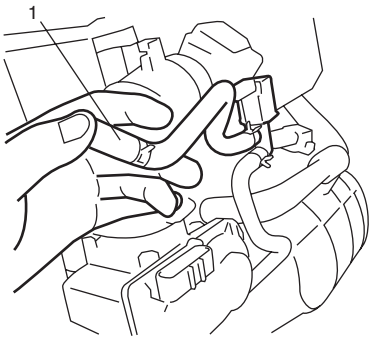

I5RW0A120006-01

EVAP Canister Purge Valve and Its Circuit Inspection

S7RW0A1206002

⚠ WARNING

Do not apply vacuum by mouth; otherwise harmful fuel vapor can be breathed in.

⚠ CAUTION

Do not apply vacuum more than –86 kPa (–12.47 psi); otherwise EVAP canister purge valve could be damaged.

1) Prepare to operate EVAP canister purge valve as follows.
   a) When using SUZUKI scan tool:
      i) Connect SUZUKI scan tool to DLC (1) with ignition switch turned OFF and disconnect purge valve vacuum hoses from intake manifold and EVAP canister.
      ii) Turn ON ignition switch, clear DTC and select “Engine / Active Test” mode on SUZUKI scan tool.

      Special tool
      (A): SUZUKI scan tool (SUZUKI-SDT)

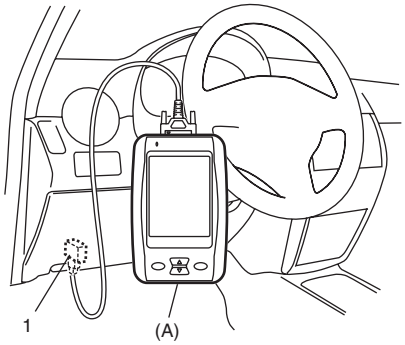

I5RW0C110011-01

   b) When not using SUZUKI scan tool:

NOTE

Before performed this check, be sure to read the “Precautions of ECM Circuit Inspection in Section 1A”.

      i) Disconnect purge valve vacuum hoses from intake manifold and purge pipe.
      ii) Remove ECM from its bracket referring to “Engine Control Module (ECM) Removal and Installation in Section 1C”.
      iii) Connect special tool between ECM and ECM connector referring to “Inspection of ECM and Its Circuits in Section 1A”.
      iv) Turn ON ignition switch.
      Using service wire, ground “C01-29” terminal circuit of special tool (valve ON: “B”) and unground it (valve OFF: “A”).

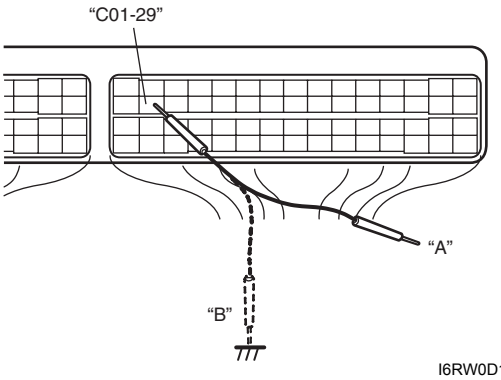

I6RW0D120001-01

2) Check purge valve for operation and vacuum passage for clog when valve is switched ON and OFF by using SUZUKI scan tool or service wire.
   If check result is not satisfactory, check vacuum hoses, EVAP canister purge valve, wire harness and connections.

   EVAP canister purge valve specification
   [A] Valve OFF: When vacuum (–60 kPa (–8.7 psi)) is applied to hose (1), vacuum can be applied.
   [B] Valve ON: When vacuum is applied to hose (1), vacuum can not be applied.

   Special tool
   (A): 09917–47011

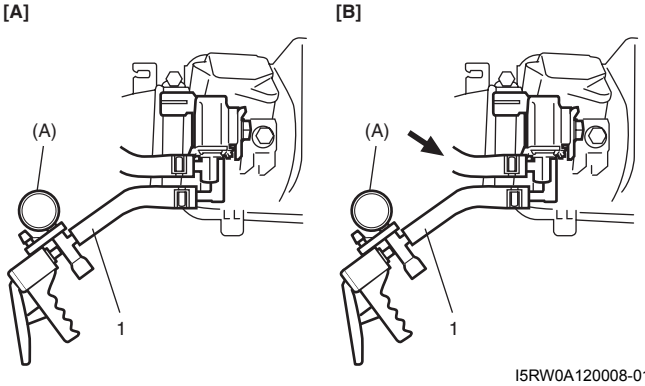

I5RW0A120008-01

Vacuum Passage Inspection

S7RW0A1206003

Start engine and run it at idle speed. Disconnect vacuum hose (1) from EVAP canister purge valve (2). With finger placed against disconnected hose, check that vacuum is applied.
If it is not applied, clean vacuum passage by blowing compressed air.

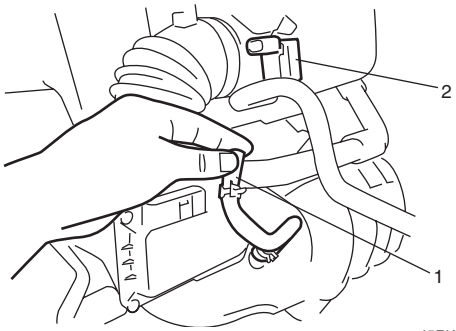

I5RW0A120003-01

Vacuum Hose Inspection

S7RW0A1206004

Check hoses for connection, leakage, clog and deterioration.
Replace as necessary.

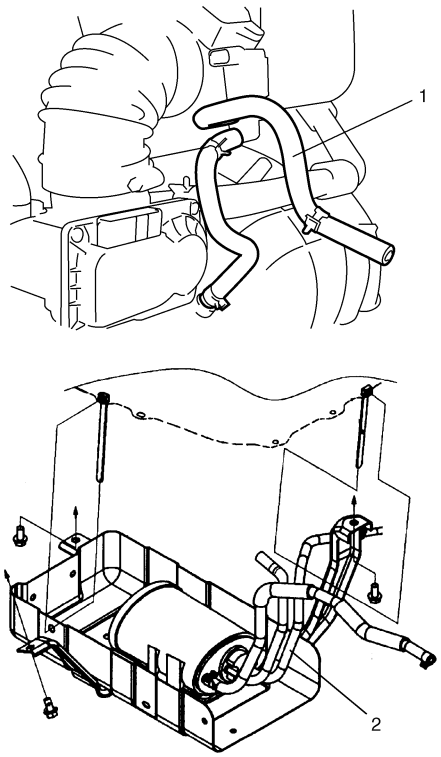

I6RW0D120002-02

1.	Purge hose (EVAP canister purge valve side)
2.	Purge pipe (EVAP canister side)

EVAP Canister Purge Valve Inspection

S7RW0A1206005

⚠ WARNING

Do not apply vacuum by mouth; otherwise harmful fuel vapor can be breathed in.

⚠ CAUTION

Do not apply vacuum more than –86 kPa (–12.47 psi); otherwise EVAP canister purge valve could be damaged.

1) With ignition switch turned OFF, disconnect coupler and vacuum hoses from canister purge valve.
2) Remove EVAP canister purge valve from air cleaner assembly.
3) Check resistance between two terminals of EVAP canister purge valve.
   If resistance is not as specified, replace EVAP canister purge valve.

   EVAP canister resistance
   30 – 34 Ω at 20 °C (68 °F)

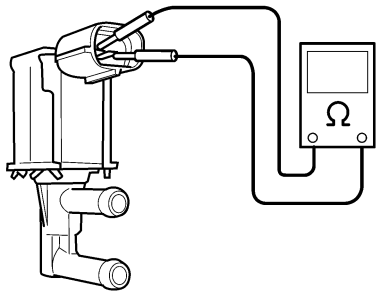

I3RM0A120008-01

4) With coupler disconnected, apply vacuum (–60 kPa (–8.7 psi)) to pipe (1). If vacuum can be applied, go to next step. If vacuum can not be applied, replace EVAP canister purge valve.
5) In this state, connect 12 V-battery to EVAP canister purge valve terminals. If vacuum can not be applied, EVAP canister purge valve is in good condition.
   If applied, replace EVAP canister purge valve.

⚠ WARNING

Do not suck the air through valve. Fuel vapor inside valve is harmful.

Special tool
(A): 09917–47011

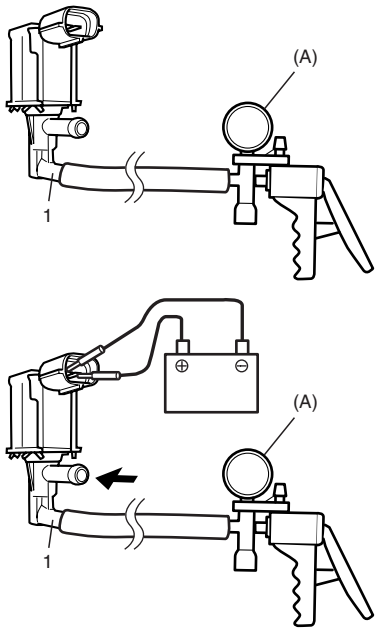

I3RB0A120007-01

6) Install EVAP canister purge valve to air cleaner assembly.

EVAP Canister Inspection

S7RW0A1206006

⚠ WARNING

DO NOT SUCK nozzles on EVAP canister.
Fuel vapor inside EVAP canister is harmful.

1) Check outside of EVAP canister visually.
2) Disconnect vacuum hoses from EVAP canister.
3) Check that there is no restriction of flow through purge pipe (1) and air pipe (2) when air is blown (4) into tank pipe (3).
   If any faulty condition is found in this inspection, replace EVAP canister.

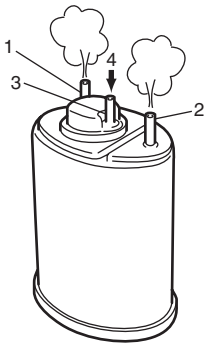

I6RW0D120003-01

EGR Valve Removal and Installation (If Equipped)

S7RW0A1206007

Removal

1) Disconnect negative cable at battery.
2) Remove air intake pipe.
3) Remove EGR pipe and gaskets.
4) Disconnect EGR valve connector.
5) Remove EGR valve and gasket from cylinder head.

Installation

Reverse removal procedure noting the following.

- Clean mating surface of valve and cylinder head.
- Use new gaskets.

EGR Valve Inspection (If Equipped)

S7RW0A1206008

1) Check resistance between following terminals of EGR valve (1) in each pair.
   If found faulty, replace EGR valve assembly.

   <u>EGR valve resistance (A – B, C – B, F – E, D – E terminal)</u>
   20 – 24 Ω

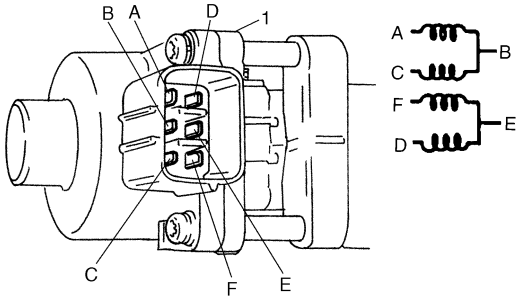

I2RH0B120005-01

2) Remove carbon from EGR valve gas passage.

⚠ CAUTION

Do not use any sharp-edged tool to remove carbon.
Be careful not to damage or bend EGR valve (1), valve seat (3) and rod.

3) Inspect valve (2), valve seat and rod for fault, cracks, bend or other damage.
   If found faulty, replace EGR valve assembly.

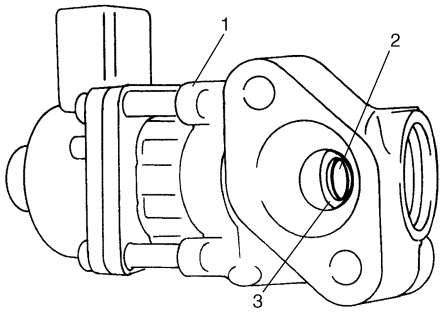

I2RH0B120006-01

PCV Hose Inspection

S7RW0A1206009

NOTE

Be sure to check that there is no obstruction in PCV valve or its hoses before checking IAC throttle valve opening, for obstructed PCV valve or hose hampers its accurate adjustment.

Check hoses for connection, leakage, clog and deterioration.
Replace as necessary.

PCV Valve Inspection

S7RW0A1206010

NOTE

Be sure to check that there is no obstruction in PCV valve or its hoses before checking IAC throttle valve opening, for obstructed PCV valve or hose hampers its accurate adjustment.

1) Detach air cleaner assembly.
2) Disconnect PCV valve from cylinder head cover and install plug to head cover hole.
3) Install air cleaner assembly temporarily.
4) Run engine at idle.
5) Place your finger over end of PCV valve (1) to check for vacuum.
   If there is no vacuum, check for clogged valve.
   Replace as necessary.

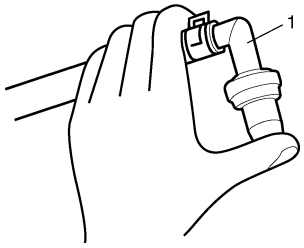

I2RH0B120007-01

6) After checking vacuum, stop engine and remove PCV valve (1).
   Shake valve and listen for rattle of check needle inside the valve. If valve does not rattle, replace PCV valve.

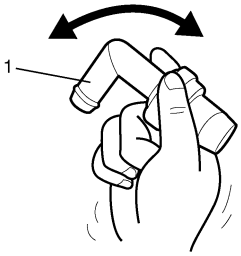

I2RH0B120008-01

7) After checking, remove plug and install PCV valve.
8) Install air cleaner assembly securely.

Special Tools and Equipment

Special Tool

S7RW0A1208001

09917–47011 Vacuum pump gauge ☞ / ☞	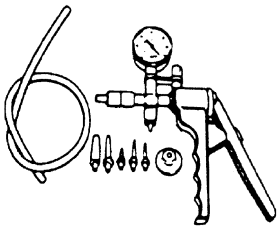	SUZUKI scan tool (SUZUKI-SDT) — This kit includes following items. 1. SUZUKI-SDT 2. DLC3 cable 3. USB cable 4. AC/DC power supply 5. Voltage meter probe 6. Storage case ☞ / ☞	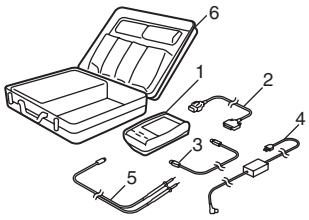

Engine Electrical Devices

Repair Instructions

Engine Control Module (ECM) Removal and Installation

S7RW0A1306001

⚠ CAUTION

As ECM consists of precision parts, be careful not to expose it to excessive shock.

Removal

1) Disconnect negative cable at battery.
2) Disconnect connectors from ECM as follows.
   a) Push lock (1) to release locking of lock lever (2).
   b) Turn lock lever to arrow direction until it stops.

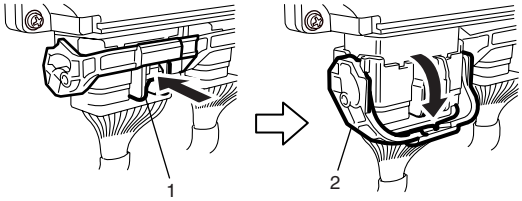

I4RS0A130003-01

3) Remove ECM (1) from its bracket by removing its mounting bolts (2).

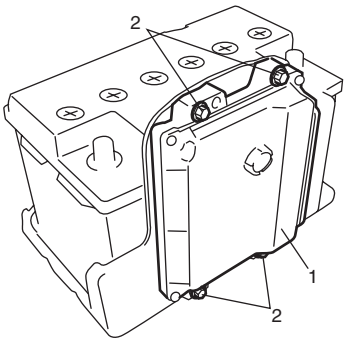

I5RW0A130001-01

Installation

Reverse removal procedure noting the following:

- Tighten ECM mounting bolts to specified torque.

  Tightening torque
  ECM mounting bolt (a): 8 N·m (0.8 kgf-m, 6.0 lb-ft)

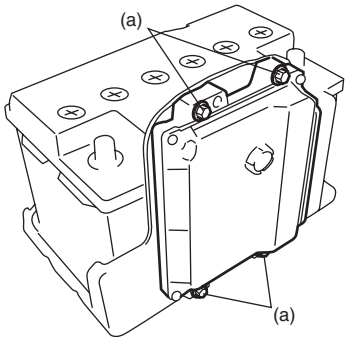

I5RW0A130002-01

- Connect connectors to ECM as follows.
  a. Make sure that lock lever of ECM connector is unlock position.

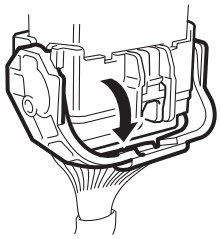

I4RS0B130021-01

  b. Insert ECM connectors to ECM until it stops with unlocked lock lever.

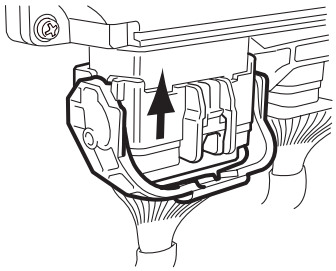

I4RS0B130022-01

  c. Lock ECM connectors securely by pulling its lock lever up.

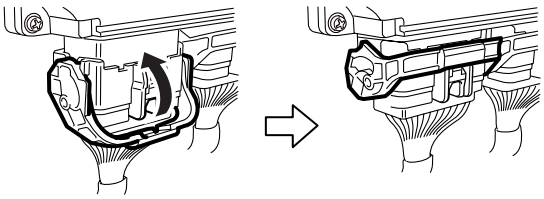

I4RS0A130004-01

Manifold Absolute Pressure (MAP) Sensor Inspection (If Equipped)

S7RW0A1306002

1) Remove air cleaner assembly.
2) Disconnect connector from MAP sensor.
3) Remove MAP sensor.
4) Arrange 3 new 1.5 V batteries (2) in series (check that total voltage is 4.5 – 5.0 V) and connect its positive terminal to “Vin” terminal of sensor and negative terminal to “Ground” terminal. Then check voltage between “Vout” and “Ground”. Also, check if voltage reduces when vacuum is applied up to 400 mmHg by using vacuum pump (3).
   If check result is not satisfactory, replace MAP sensor (1).

Output voltage (When input voltage is 4.5 – 5.5 V, ambient temp. 20 – 30 °C, 68 – 86 °F)

Altitude (Reference)		Barometric pressure		Output voltage
(ft)	(m)	(mmHg)	(kPa)	(V)
0 – 2000	0 – 610	760 – 707	100 – 94	3.3 – 4.3
2001 – 5000	611 – 1524	Under 707 over 634	94 – 85	3.0 – 4.1
5001 – 8000	1525 – 2438	Under 634 over 567	85 – 76	2.7 – 3.7
8001 – 10000	2439 – 3048	Under 567 over 526	76 – 70	2.5 – 3.3

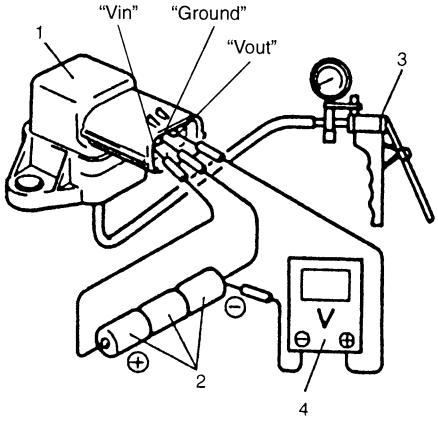

I3RM0A130005-01

5) Install MAP sensor securely.
6) Connect MAP sensor connector securely.
7) Install air cleaner assembly.

Electric Throttle Body Assembly On-Vehicle Inspection

S7RW0A1306003

⚠ WARNING

Never touch throttle valve with finger while ignition switch is turned ON and accelerator pedal is depressed. Otherwise, injury may result by pinching the finger between throttle valve and throttle body housing.

⚠ CAUTION

- **Do not disassemble electric throttle body assembly.**
- **Do not expose electric throttle body assembly to excessive shock like a dropping it. If electric throttle body assembly has been exposed to excessive shock, it should be replaced.**
- **Be careful not to accrete a foreign material (like dust and/or metallic particle) to the throttle body housing and/or throttle valve. Otherwise, the throttle body assembly is breaking down by throttle valve accretion.**
- **Do not apply excessive moving force to throttle valve for throttle valve operation check and/or TP sensor performance check.**
  Otherwise, the throttle body assembly is breaking down by damaging the internal resinous gear of throttle valve actuator.

NOTE

After replacing electric throttle body assembly, perform calibration of electric throttle body assembly referring to “Electric Throttle Body System Calibration”.

Throttle Valve Visual Check

1) Remove air cleaner outlet hose.
2) Check that there isn’t any foreign matter caught between throttle valve and throttle body housing. If there is, take it out after removing throttle body referring to “Electric Throttle Body Assembly Removal and Installation in Section 1D” and clean inside of throttle body thoroughly.

Throttle Valve Operation Check

1) Remove air cleaner outlet hose.
2) Turn OFF ignition switch.
3) Move throttle valve with finger to its full open position and check that it moves smoothly.

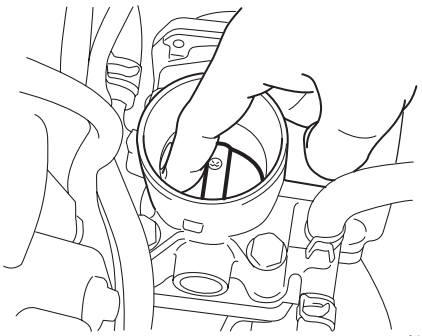

I4RS0B130004-01

4) Take off finger from opened throttle valve (1) which is at full open position and check that it moves smoothly by its return spring and open spring force back to default position (position where throttle valve is open by 7° (2) from completely closed position).
5) Move throttle valve with finger to its completely closed position and check that it moves smoothly.
6) Take off finger from closed throttle valve (1) which is at completely closed position and check that it moves smoothly by its return spring and open spring force back to default position.

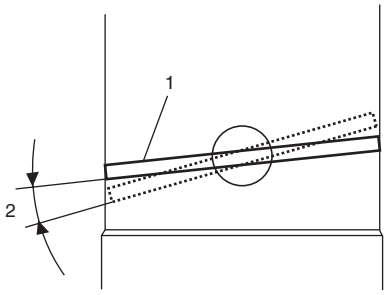

I4RS0B130005-01

If check result is not satisfactory, replace electric throttle body assembly.

Electric Throttle Body Assembly Operation Check

1) Remove air cleaner outlet hose.
2) Turn ON ignition switch.
3) Depress accelerator pedal gradually and check that throttle valve moves smoothly until it opens fully.
4) Release accelerator pedal depressed in Step 3) and check that throttle valve (1) moves back to default position (position where throttle valve is open by 7° (2) from its completely closed position).

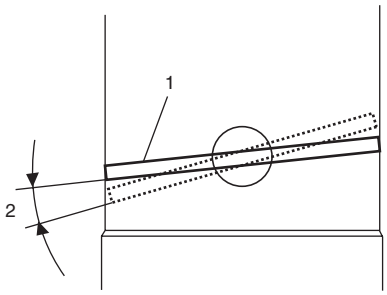

I4RS0B130005-01

If check result is satisfactory, electric throttle body system is in good condition.If check result is not satisfactory, proceed to next step.

5) Perform “Accelerator Pedal Position (APP) Sensor Assembly On-Vehicle Inspection”, “Throttle Actuator (Motor) Check” and “Throttle Position Sensor Performance Check”.
   If check results are not satisfactory, replace electric throttle body assembly.
   If check results are satisfactory, wire circuit and/or ECM are faulty.

Throttle Actuator (Motor) Check

1) Turn OFF ignition switch.
2) Disconnect connector from electric throttle body assembly.
3) Measure resistance between “M1” terminal (1) and “M2” terminal (2) of electric throttle body assembly. If measured resistance is out of specified value, replace electric throttle body assembly.

   Throttle actuator (motor) resistance
   0.3 – 100 Ω at 20 °C (68 °F)

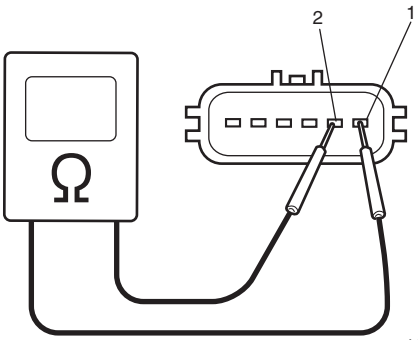

I4RS0B130023-01

Throttle Position Sensor Performance Check

1) Remove air cleaner outlet hose.
2) Turn OFF ignition switch.
3) Disconnect connector from electric throttle body assembly.
4) Check throttle position sensor (main and sub) output voltage as following steps.
   a) For throttle position sensor (main), arrange 3 new 1.5 V batteries (1) in series (check that total voltage is 4.5 – 5.0 V) and connect its positive terminal to “Vin” terminal (2) and negative terminal to “Ground” terminal (3) of sensor. Then using voltmeter, connect positive terminal to “Vout 1” terminal (4) of sensor and negative terminal to battery.

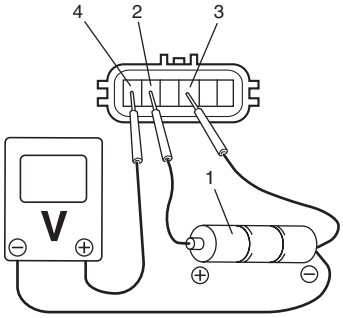

I4RS0B130007-02

b) For throttle position sensor (sub), arrange 3 new 1.5 V batteries (1) in series (check that total voltage is 4.5 – 5.0 V) and connect its positive terminal to “Vin” terminal (2) and negative terminal to “Ground” terminal (3) of sensor. Then using voltmeter, connect positive terminal to “Vout 2” terminal (4) of sensor and negative terminal to battery.

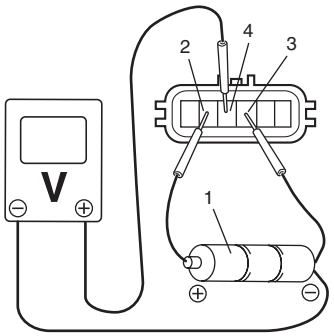

I4RS0B130008-01

c) Measure output voltage variation while throttle valve is opened and closed as following specification.

If sensor voltage is out of specified value and linear variation as the following graph, replace electric throttle body assembly.

TP sensor output voltage

TP sensor (main) [A]: 0.45 – 4.88 V, varying according to throttle valve opening by finger (Voltage should vary by 0.04 V for each 1° valve opening)

TP sensor (sub) [B]: 1.33 – 5.007 V, varying according to throttle valve opening by finger (Voltage should vary by about 0.032 V for each 1° valve opening)

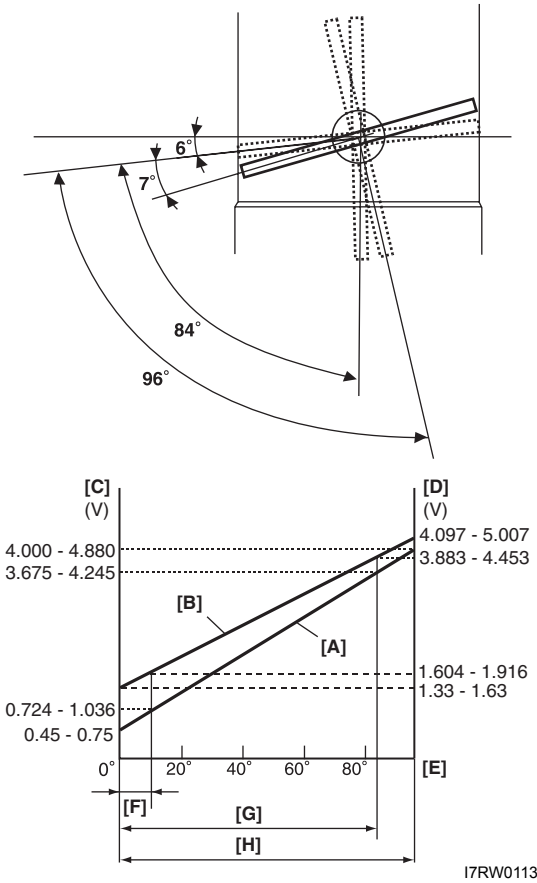

I7RW01130019-05

[C]:	TP sensor (main) output voltage
[D]:	TP sensor (sub) output voltage
[E]:	Throttle valve opening
[F]:	Position where throttle valve is open by 7° from completely closed position (default position)
[G]:	Angel obtained when accelerator pedal is depressed fully (84°)
[H]:	Angle obtained when throttle valve is fully opened with finger (96°)

Electric Throttle Body System Calibration

S7RW0A1306004

NOTE

If the service described under the “Precautions of Electric Throttle Body System Calibration in Section 1A” is performed, calibrate electric throttle body system as follows.

1) If electric throttle body assembly and/or accelerator pedal position (APP) sensor assembly are replaced, perform following steps.
   a) Disconnect negative cable at battery for 20 seconds or more for the purpose of clearing calibration data of closed throttle position from memory in ECM.
   b) Connect negative cable to battery.
2) Keep ignition switch at ON position for 5 seconds or more without running engine.

Accelerator Pedal Position (APP) Sensor Assembly On-Vehicle Inspection

S7RW0A1306005

1) Check that APP sensor assembly has been mounted to vehicle body properly (no pinched floor carpet, etc.).
   If mounting is not properly, reinstall APP sensor assembly properly referring to “Accelerator Pedal Position (APP) Sensor Assembly Removal and Installation”.
2) Connect scan tool to DLC with ignition switch turned OFF.
3) Turn ON ignition switch and select “Data List” mode on scan tool.
4) Check that accelerator pedal position sensor voltage varies as the following graph.
   If sensor voltage is out of specified value or does not vary linearly as the following graph, check APP sensor assembly referring to “Accelerator Pedal Position (APP) Sensor Assembly Inspection”.

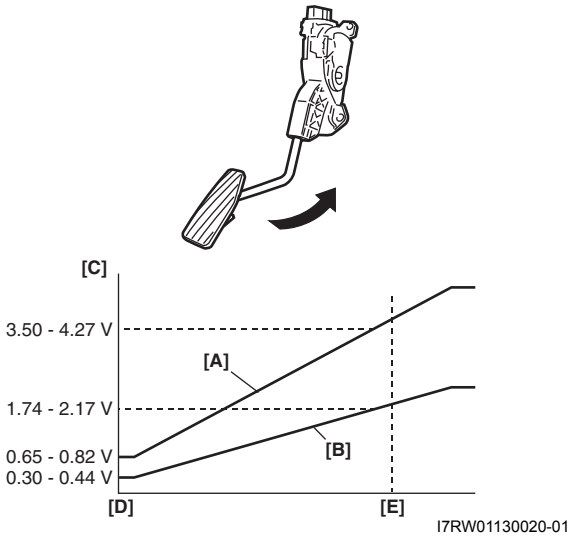

I7RW01130020-01

[A]:	APP sensor (main) voltage
[B]:	APP sensor (sub) voltage
[C]:	Voltage
[D]:	Idle position of accelerator pedal
[E]:	Full depressed position of accelerator pedal

Accelerator Pedal Position (APP) Sensor Assembly Removal and Installation

S7RW0A1306006

⚠ CAUTION

- **Do not expose APP sensor assembly to excessive shock like a dropping it. If APP sensor assembly has been exposed to excessive shock, it should be replaced.**
- **Be careful not to expose sensor section of APP sensor assembly to water.**

NOTE

After replacing APP sensor assembly, perform calibration of throttle valve referring to “Electric Throttle Body System Calibration”.

Removal

1) Disconnect negative cable at battery.
2) Disconnect connector from APP sensor assembly.
3) Remove APP sensor assembly from its bracket.

Installation

Reverse removal procedure for installation noting the following.

- Tighten APP sensor assembly upper nut (1) first and then lower nuts (2) to specified torque.

Tightening torque

APP sensor assembly nut (a): 6 N·m (0.6 kgf-m, 4.5 lb-ft)

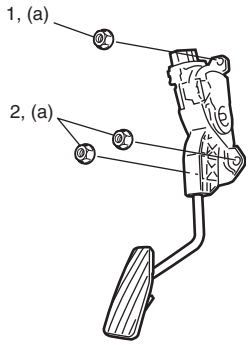

I5RW0A130004-01

- Connect connector to APP sensor assembly securely.

Accelerator Pedal Position (APP) Sensor Assembly Inspection

S7RW0A1306007

Check APP sensor (main and sub) output voltage as following steps.

1) For APP sensor (main), arrange 3 new 1.5 V batteries (1) in series (check that total voltage is 4.5 – 5.0 V) and connect its positive terminal to “Vin 1” terminal (2) and negative terminal to “Ground 1” terminal (3) of sensor. Then using voltmeter, connect positive terminal to “Vout 1” terminal (4) of sensor and negative terminal to battery.

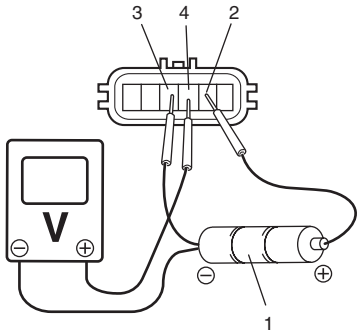

I5RW0A130005-01

2) For APP sensor (sub), arrange 3 new 1.5 V batteries (1) in series (check that total voltage is 4.5 – 5.0 V) and connect its positive terminal to “Vin 2” terminal (2) and negative terminal to “Ground 2” terminal (3) of sensor. Then using voltmeter, connect positive terminal to “Vout 2” terminal (4) of sensor and negative terminal to battery.

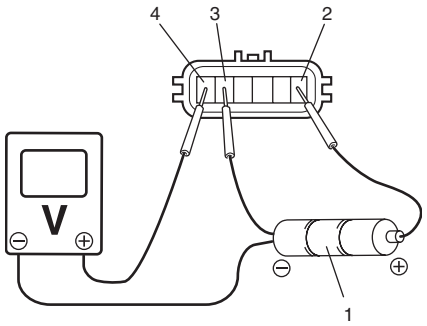

I5RW0A130006-02

3) Measure output voltage variation while accelerator pedal is no depressed and fully depressed as following graph.

If sensor voltage is out of specified value or does not vary linearly as the following graph, replace APP sensor assembly.

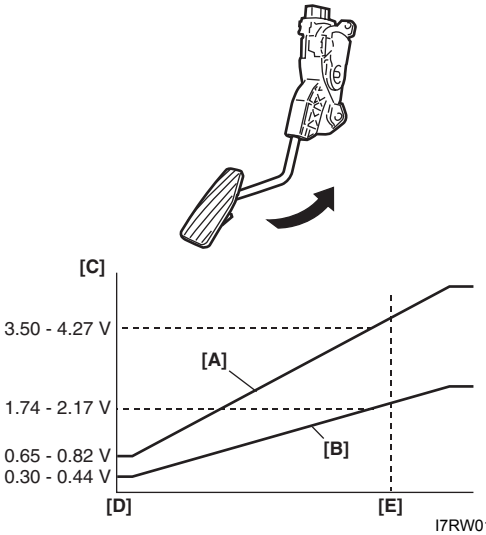

I7RW01130020-01

[C]:	Voltage
[D]:	Idle position of accelerator pedal
[E]:	Fully depressed position of accelerator pedal

Engine Coolant Temperature (ECT) Sensor Removal and Installation

S7RW0A1306008

Removal

1) Disconnect negative cable at battery.
2) Drain coolant referring to “Cooling System Draining in Section 1F”.

⚠ WARNING

To avoid danger of being burned, do not remove radiator cap while engine and radiator are still hot.
Scalding fluid and steam can be blown out under pressure if cap is taken off too soon.

3) Remove air intake pipe.
4) Disconnect connector from ECT sensor (1).

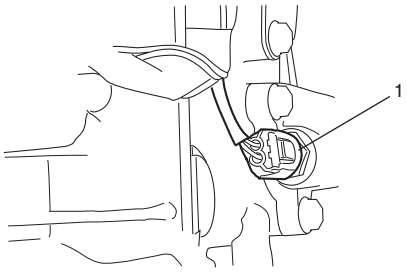

I2RH0B130008-01

5) Remove ECT sensor from water outlet.

Installation

Reverse removal procedure noting the following.

- Clean mating surfaces of ECT sensor and water outlet.
- Check O-ring for damage and replace, if necessary.
- Tighten ECT sensor (1) to specified torque.

Tightening torque
ECT sensor (a): 15 N·m (1.5 kgf-m, 11.0 lb-ft)

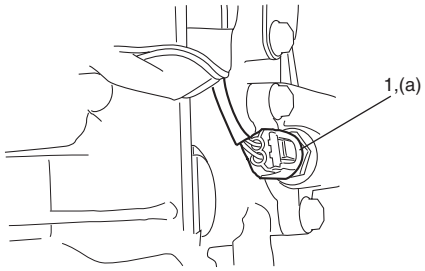

I2RH0B130009-01

- Connect connector to ECT sensor securely.
- Refill coolant referring to “Cooling System Flush and Refill in Section 1F”.

Engine Coolant Temperature (ECT) Sensor Inspection

S7RW0A1306009

Immerse temperature sensing part of ECT sensor (1) in water (or ice) and measure resistance between sensor terminals while heating water gradually.
If measured resistance doesn't show such characteristic as shown, replace ECT sensor.

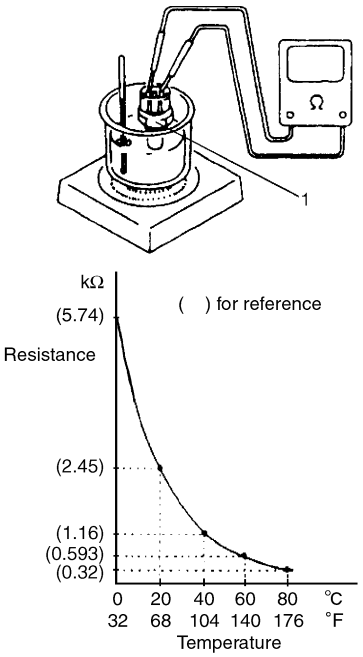

I5RW0A130007-01

Heated Oxygen Sensor (HO2S-1 and HO2S-2) Heater On-Vehicle Inspection (If Equipped)

S7RW0A1306010

1) Disconnect sensor connector.
2) Using ohmmeter, measure resistance between terminals "V_B" and "GND" of sensor connector.
   If found faulty, replace oxygen sensor.

NOTE

Temperature of sensor affects resistance value largely. Make sure that sensor heater is at correct temperature.

Resistance of oxygen sensor heater
HO2S-1: 5.0 – 6.4 Ω at 20 °C (68 °F)
HO2S-2: 11.7 – 14.5 Ω at 20 °C (68 °F)

Viewed from terminal side

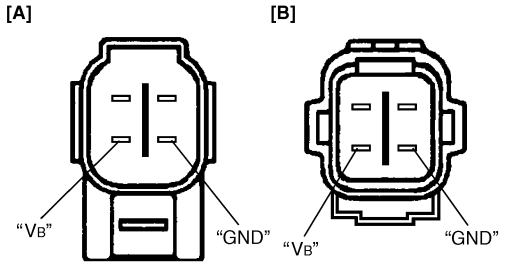

I4RS0A130006-01

[A]: HO2S-1	[B]: HO2S-2

3) Connect sensor connector securely.

Heated Oxygen Sensor (HO2S-1 and HO2S-2) Removal and Installation (If Equipped)

S7RW0A1306011

Removal

⚠ WARNING

To avoid danger of being burned, do not touch exhaust system when system is hot. Oxygen sensor removal should be performed when system is cool.

1) Disconnect negative cable at battery.
2) Disconnect connector of heated oxygen sensor and release its wire harness from clamps.
3) Perform following items before removing heated oxygen sensor.
   a) For HO2S-1, remove exhaust manifold referring to "Exhaust Manifold Removal and Installation in Section 1K", if necessary.
   b) For HO2S-2, hoist vehicle.
4) Remove heated oxygen sensor from exhaust pipe or exhaust manifold.

Installation

Reverse removal procedure noting the following.

- Tighten heated oxygen sensor (1) to specified torque.

  Tightening torque
  Heated oxygen sensor (a): 45 N·m (4.5 kgf-m, 32.5 lb-ft)

- Install exhaust manifold referring to “Exhaust Manifold Removal and Installation in Section 1K”, if removed.
- Connect connector of heated oxygen sensor (1) and clamp wire harness securely.
- After installing heated oxygen sensor, start engine and check that no exhaust gas leakage exists.

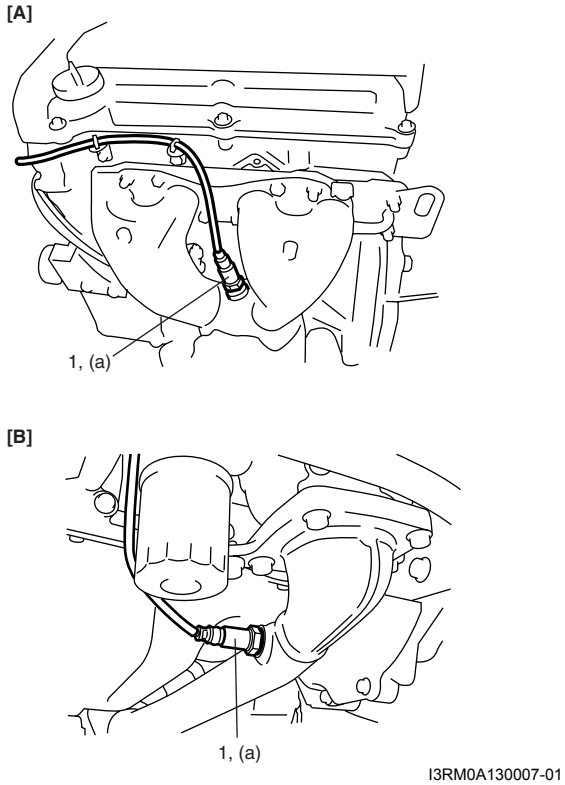

I3RM0A130007-01

[A]: HO2S-1	[B]: HO2S-2

Camshaft Position (CMP) Sensor Removal and Installation

S7RW0A1306012

Removal

1) Disconnect negative cable at battery.
2) Disconnect connector from CMP sensor.
3) Remove camshaft position sensor from timing chain cover (non-VVT model) or cylinder head (VVT model).

Installation

1) Install camshaft position sensor to timing chain cover (non-VVT model) or cylinder head (VVT model).

   Tightening torque
   CMP sensor bolt (non-VVT model) (a): 10 N·m (1.0 kgf-m, 7.5 lb-ft)
   CMP sensor bolt (VVT model) (b): 11 N·m (1.1 kgf-m, 8.0 lb-ft)

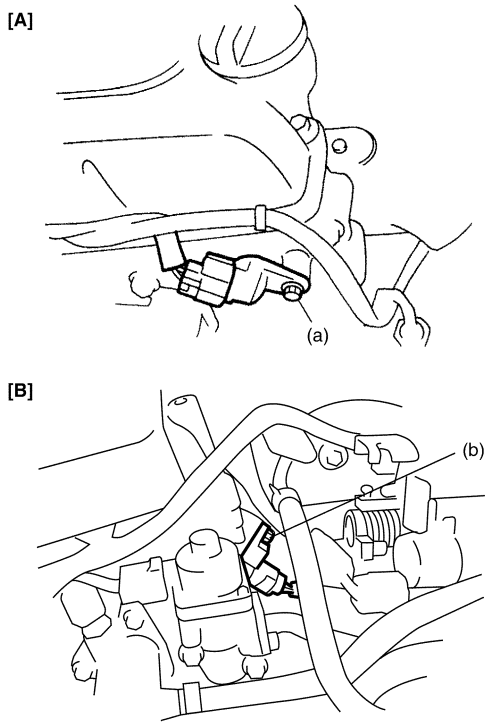

I6RW0D130002-02

[A]: Non-VVT model	[B]: VVT model

2) Connect connector to CMP sensor securely.
3) Connect negative cable to battery.

Camshaft Position (CMP) Sensor Inspection

S7RW0A1306013

Visual check

- Check that O-ring is free from damage.
- Check that end face of sensor and signal rotor tooth are free from any metal particles and damage.

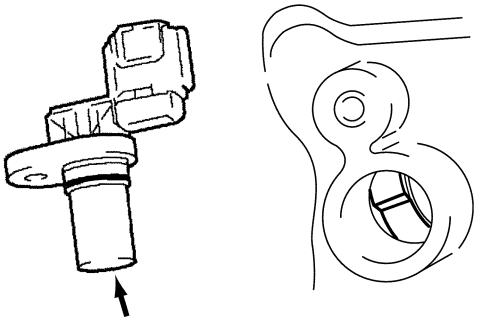

I4RS0B130015-01

Performance check

1) Remove metal particles on end face of CMP sensor, if any.
2) Arrange 12 V battery (1) and connect its positive terminal to “Vin” terminal (2) and negative terminal to “Ground” terminal (3) of sensor. Then using ohmmeter, measure resistance between “Vout” terminal (4) of sensor and negative terminal of battery by passing magnetic substance (iron) (5) while keeping approximately 1 mm (0.03 in.) gap with respect to end face of CMP sensor.
   If resistance does not vary as specified below, replace CMP sensor.

<u>CMP sensor resistance</u>
Resistance varies from less than 220 Ω (ON) to infinity (OFF) or from infinity (OFF) to less than 220 Ω (ON)

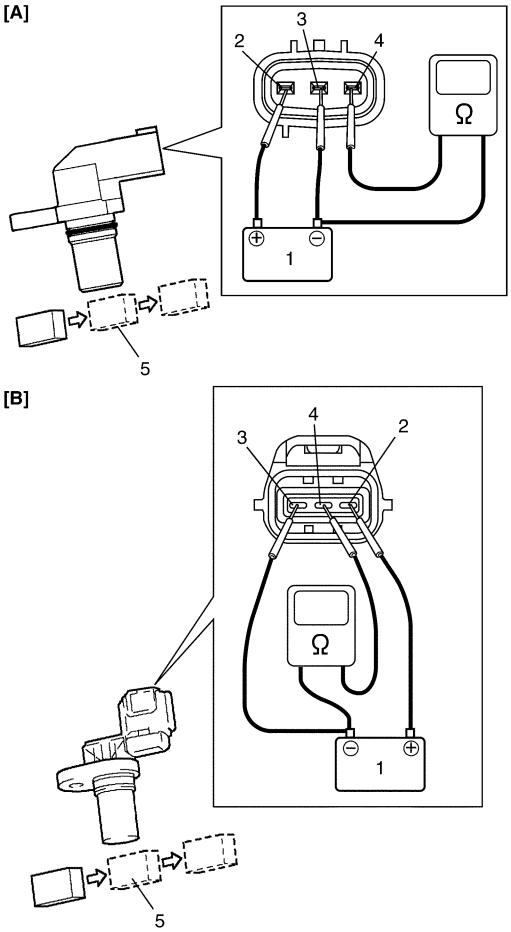

I4RS0B130016-02

[A]: Non-VVT model	[B]: VVT model

Crankshaft Position (CKP) Sensor Removal and Installation

S7RW0A1306014

Removal

1) Disconnect negative cable at battery.
2) Remove generator drive belt, loosen pivot bolt and move generator rearward.
3) Disconnect connector from crankshaft position sensor.
4) Remove crankshaft position sensor (1) from cylinder block.

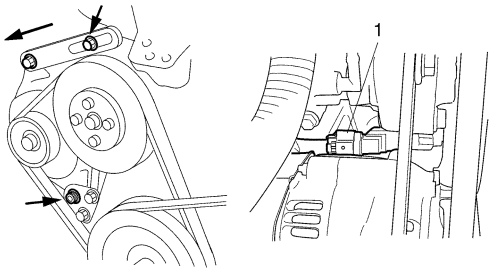

I2RH0B130012-01

Installation

1) Install crankshaft position sensor to cylinder block. Tighten CKP sensor bolt to specified torque.

   Tightening torque
   CKP sensor bolt (a): 11 N·m (1.1 kgf-m, 8.0 lb-ft)

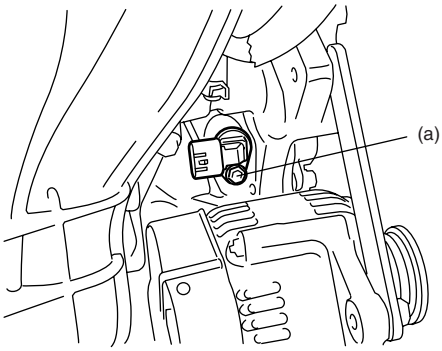

I4RS0A130007-01

2) Connect connector to CKP sensor securely.
3) Adjust generator drive belt tension referring to "Water Pump / Generator Drive Belt Tension Inspection and Adjustment in Section 1F".
4) Connect negative cable to battery.

Crankshaft Position (CKP) Sensor Inspection

S7RW0A1306015

Visual check

- Check that O-ring is free from damage.
- Check that end face of sensor and signal pulley tooth are free from any metal particles and damage.

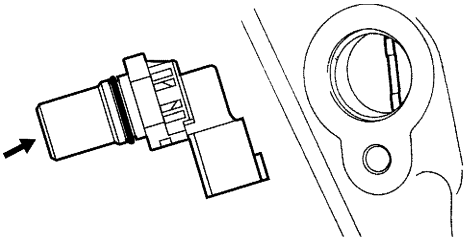

I3RB0A130006-01

Performance check

1) Remove metal particles on end face of CKP sensor, if any.
2) Arrange 12 V battery (1) and connect its positive terminal to "Vin" terminal (2) and negative terminal to "Ground" terminal (3) of sensor. Then using ohmmeter, measure resistance between "Vout" terminal (4) of sensor and negative terminal of battery by passing magnetic substance (iron) (5) while keeping approximately 1 mm (0.03 in.) gap with respect to end face of CKP sensor.
   If resistance does not vary as specified below, replace CKP sensor.

CKP sensor resistance

Resistance varies from less than 220 Ω (ON) to infinity (OFF) or from infinity (OFF) to less than 220 Ω (ON)

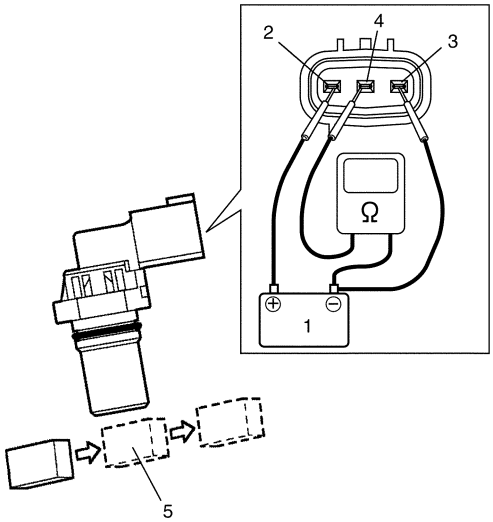

I4RS0B130017-01

[A]: non-VVT model	[B]: VVT model

Knock Sensor Removal and Installation

S7RW0A1306016

Removal

1) Disconnect negative cable at battery.
2) Hoist vehicle.
3) Remove right side drive shaft referring to "Front Drive Shaft Assembly Removal and Installation: Front in Section 3A".
4) Disconnect knock sensor connector (1).
5) Remove knock sensor (2) from cylinder block.

Installation

Reverse removal procedure for installation.

Tightening torque
Knock sensor (a): 22 N·m (2.2 kgf-m, 16.0 lb-ft)

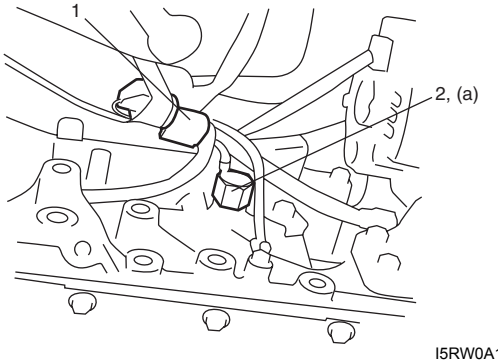

I5RW0A130009-01

Main Relay, Fuel Pump Relay, Starting Motor Control Relay, Throttle Actuator Control Relay and Radiator Cooling Fan Relay Inspection

S7RW0A1306017

1) Disconnect negative cable at battery.
2) Remove main relay (1), fuel pump relay (3), starting motor control relay (2), throttle actuator control relay (4) and/or radiator cooling fan relay (5) from individual circuit fuse box No.1.
3) Check that there is no continuity between terminal “C” and “D”. If there is continuity, replace relay.
4) Connect battery positive (+) terminal to terminal “B” of relay. Connect battery negative (–) terminal to terminal “A” of relay. Check for continuity between terminal “C” and “D”. If there is no continuity when relay is connected to the battery, replace relay.

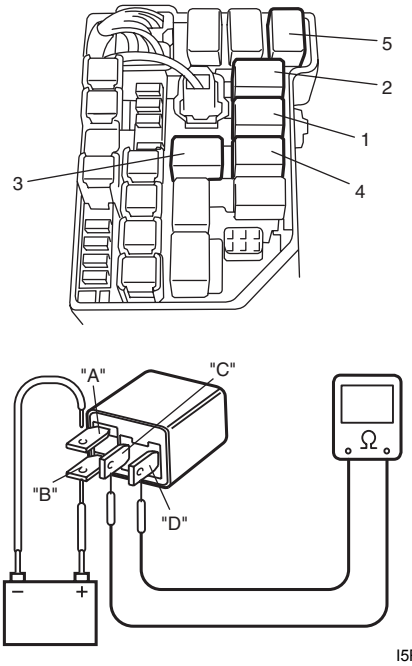

I5RW0A130014-01

Mass Air Flow (MAF) and Intake Air Temperature (IAT) Sensor On-Vehicle Inspection

S7RW0A1306018

NOTE

Before performed this inspection, be sure to read the “Precautions of ECM Circuit Inspection in Section 1A”.

1) Disconnect negative cable at battery.
2) Disconnect MAF and IAT sensor connector.
3) Connect voltmeter to “BLK/RED” wire terminal (2) of MAF and IAT sensor connector (1) disconnected and ground.

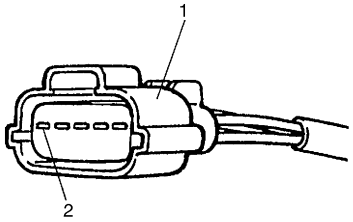

I3RB0A130009-01

4) Turn ON ignition switch position and check that voltage is battery voltage.
   If not, check if wire harness is open or connection is poor.
5) Turn OFF ignition switch position and connect connector to MAF and IAT sensor.
6) Remove ECM from its bracket referring to “Engine Control Module (ECM) Removal and Installation”.
7) Connect special tool between ECM and ECM connector referring to “Inspection of ECM and Its Circuits in Section 1A”.
8) Turn ON ignition switch position and check MAF signal voltage between “C01-26” terminal circuit and “C01-27” terminal circuit of special tool.

   MAF signal voltage between “C01-26” terminal circuit and “C01-27” terminal circuit of special tool
   MAF signal voltage of MAF and IAT sensor with ignition switch turned ON: 0.5 – 1.0 V

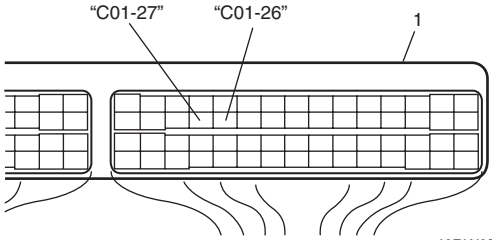

I6RW0D130003-02

1. ECM

9) Start engine and check that voltage is lower than 5 V and it rises as engine speed increases.

   MAF signal voltage between “C01-26” terminal circuit and “C01-27” terminal circuit of special tool
   MAF signal reference voltage of MAF and IAT sensor at specified Idle speed: 1.3 – 1.8 V

10) If check result is not as specified above, cause may lie in wire harness, connector connection, MAF and IAT sensor or ECM.

Mass Air Flow (MAF) and Intake Air Temperature (IAT) Sensor Removal and Installation

S7RW0A1306019

⚠ CAUTION

- **Do not disassemble MAF and IAT sensor.**
- **Do not expose MAF and IAT sensor to any shock.**
- **Do not clean MAF and IAT sensor.**
- **If MAF and IAT sensor has been dropped, it should be replaced.**
- **Do not blow compressed air by using air gun or the like.**
- **Do not put finger or any other object into MAF and IAT sensor. Malfunction may occur.**

Removal

1) Disconnect negative cable at battery.
2) Disconnect MAF and IAT sensor connector.
3) Remove air cleaner case (1).
4) Remove MAF and IAT sensor (2) from air cleaner case.

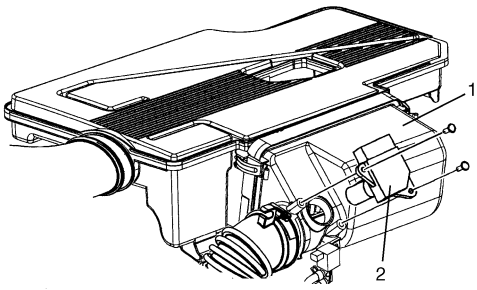

I6RW0D130004-02

Installation

Reverse removal procedure noting the followings.

- Tighten MAF and IAT sensor screws to specified torque.

  Tightening torque
  MAF and IAT sensor screw: 1.5 N·m (0.15 kgf-m, 1.1 lb-ft)

- Connect MAF and IAT sensor connector securely.

Intake Air Temperature (IAT) Sensor Inspection

S7RW0A1306020

⚠ CAUTION

Do not heat up MAF and IAT sensor more than 100 °C (212 °F). Otherwise, MAF and IAT sensor will be damaged.

- Check sensor O-ring (1) for damage and deterioration. Replace as necessary.
- Blow hot air to temperature sensing part (2) of MAF and IAT sensor (3) using hot air drier (4) and measure resistance between sensor terminals while heating air gradually.
  If measured resistance does not show such characteristic as shown, replace MAF and IAT sensor.

<u>Intake air temperature sensor resistance</u>
–20 °C (–4 °F): 13.6 – 18.4 kΩ
20 °C (68 °F): 2.21 – 2.69 kΩ
60 °C (140 °F): 0.493 – 0.667 kΩ

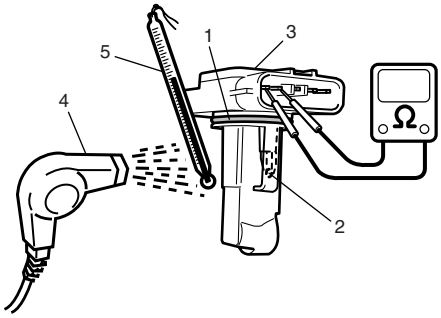

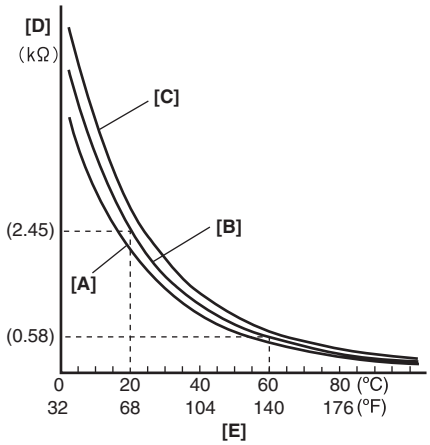

I4RS0A130012-01

[A]: Lower limit	[D]: Resistance
[B]: Nominal	[E]: Temperature
[C]: Upper limit	5. Temperature gauge

Specifications

Tightening Torque Specifications

S7RW0A1307001

Fastening part	Tightening torque			Note
	N·m	kgf-m	lb-ft	
ECM mounting bolt	8	0.8	6.0	☞
ECT sensor	15	1.5	11.0	☞
Heated oxygen sensor	45	4.5	32.5	☞
CMP sensor bolt (non-VVT model)	10	1.0	7.5	☞
CMP sensor bolt (VVT model)	11	1.1	8.0	☞
CKP sensor bolt	11	1.1	8.0	☞
Knock sensor	22	2.2	16.0	☞
MAF and IAT sensor screw	1.5	0.15	1.1	☞

Reference:
For the tightening torque of fastener not specified in this section, refer to “Fasteners Information in Section 0A”.

Engine Mechanical

General Description

Engine Construction Description

S7RW0A1401001

The engine is water-cooled, in line 4 cylinders, 4 stroke cycle gasoline unit with its DOHC (Double overhead camshaft) valve mechanism arranged for “V” type valve configuration and 16 valves (4 valves/one cylinder). The double overhead camshaft is mounted over the cylinder head; it is driven from crankshaft through timing chain, and no push rods are provided in the valve train system.

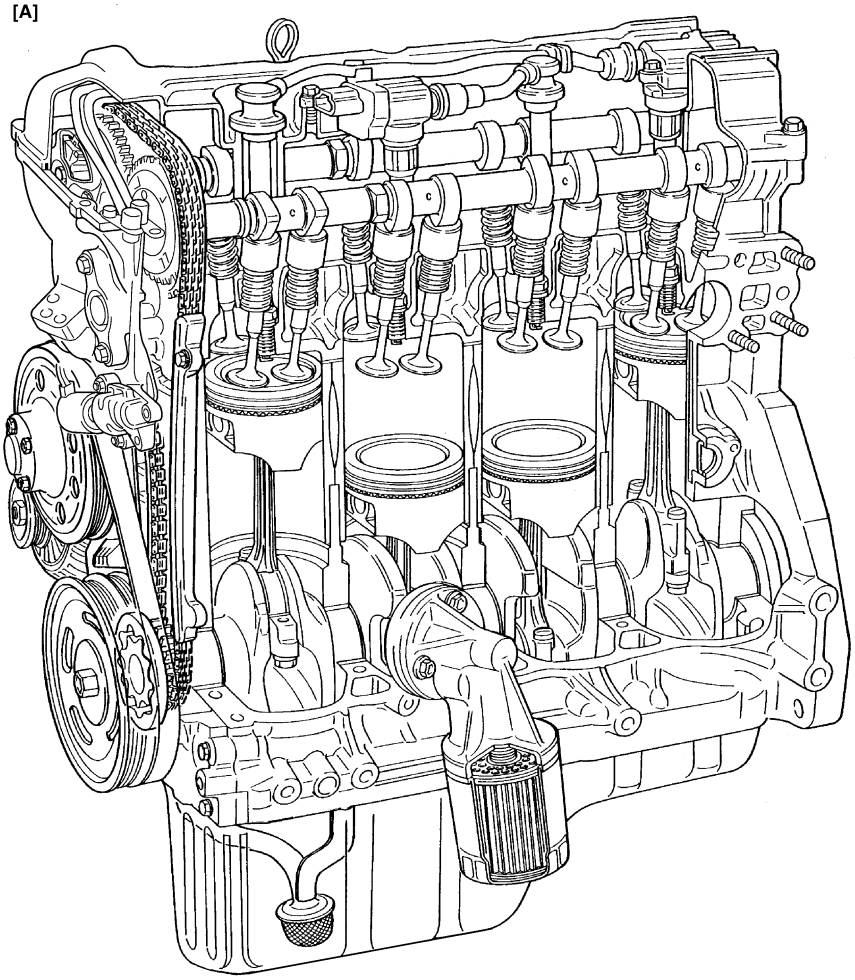

I5RW0C140032-01

[B]

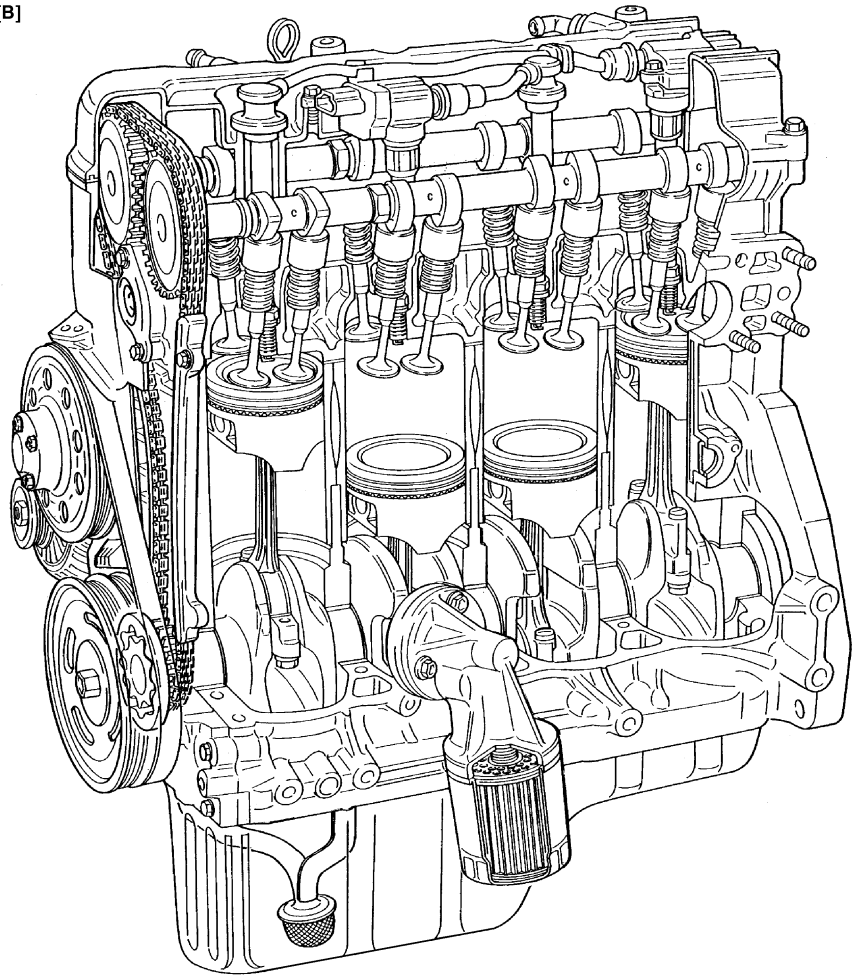

I5RW0C140033-01

[A]: For engine with VVT system	[B]: For engine without VVT system

Camshaft Position Control (VVT Variable Valve Timing) System Description

S7RW0A1401002

System Description

The VVT system is an electronic control system which continuously vary and optimize the intake valve timing in response to the engine operating condition.
The optimized intake valve timing produce such an air intake with high efficiency that both the higher power generation and lower fuel consumption can be attained in the whole engine speed range from low to high. In the area of the average engine load, low emission of nitrogen oxides (NOx) and high fuel efficiency can also be attained by making the valve opening overlap between the intake and exhaust valves longer.
For the brief of the system operation, the intake valve timing is varied by the cam timing sprocket (1) which varies the rotational phase between the intake camshaft (3) and sprocket. The rotor (2) in the cam timing sprocket is actuated by switching or adjusting the hydraulic pressure applied to the chambers for the timing advancing (7) and/or retarding (6). To switch or adjust the hydraulic pressure appropriately, ECM operates the oil control valve (12) with detecting the engine speed, intake air value, throttle opening, engine coolant temperature and camshaft position (angle).

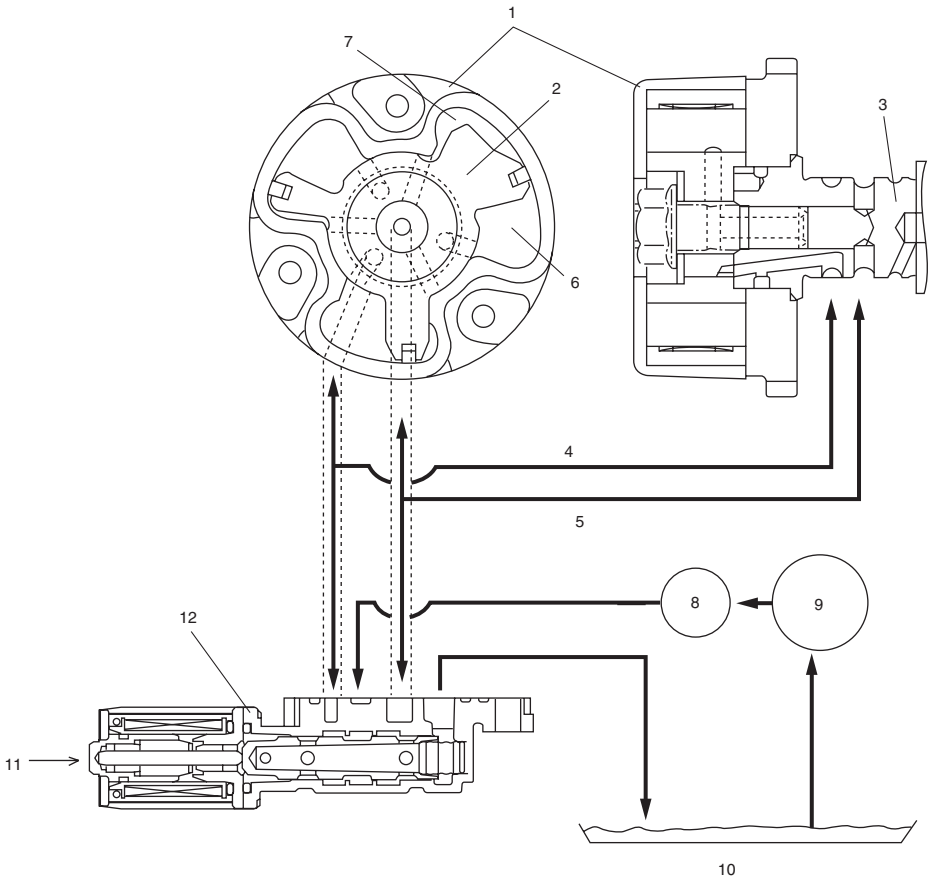

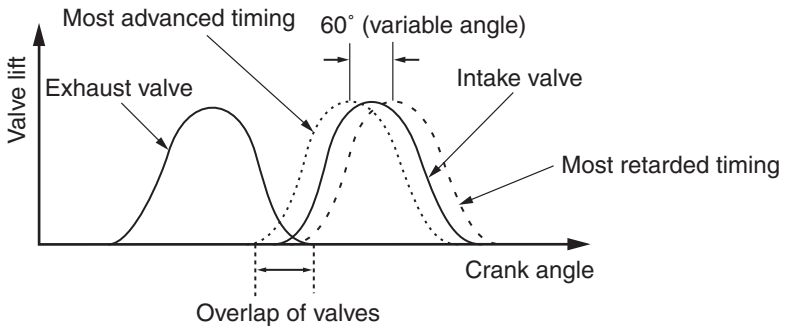

I5RW0C140002-01

4. Oil passage to chamber for timing retarding	8. Oil filter	10. Oil pan
5. Oil passage to chamber for timing advancing	9. Oil pump	11. Control signal from ECM

Oil Control Valve

The oil control valve switches and adjusts the hydraulic pressure applied to the cam timing sprocket by moving the spool valve (1) according to the duty pulse signals output from the ECM. By this operation, the intake valve timing is varied continuously. Signals output from the ECM are the duty pulse of about 240 Hz.

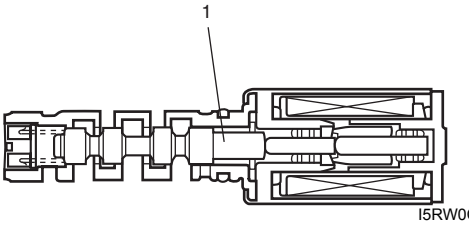

I5RW0C140034-01

Cam Timing Sprocket

The cam timing sprocket is equipped with the chambers for timing advancing (2) and retarding (3) which are separated by the rotor (5). The rotor rotates receiving the hydraulic pressure applied to both the chambers. The sprocket (1) is installed on the housing (4) and the rotor is secured on the intake camshaft by fastening the bolts. Therefore, the actuation of the rotor makes the phase difference between the sprocket and intake camshaft.

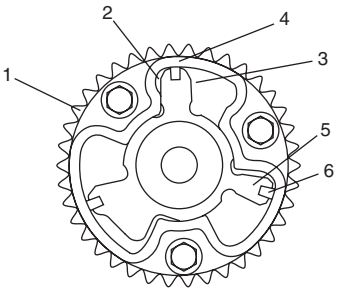

I3RH0B140004-01

6. Seal

Timing Advancing

When the duty ratio of the signal output from the ECM is heavy, the spool valve (4) of the oil control valve moves to the left (opposite direction against the coil (5)). By this spool valve movement, the pressurized oil (1) is led into the chambers for timing advancing and the oil in the chambers for timing retarding is drained. This operations actuate the rotor (3) and result in the advanced timing of the intake valve.

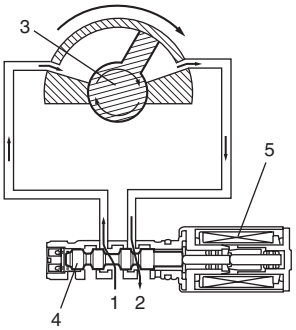

I5RW0C140035-01

2. Drain

Timing Holding

When the duty ratio of the signal output from the ECM shows that of holding, the spool valve of the oil control valve is located at hold position. Because this condition generates no oil pressure changes in both chambers, the rotor is fixed at a target position.

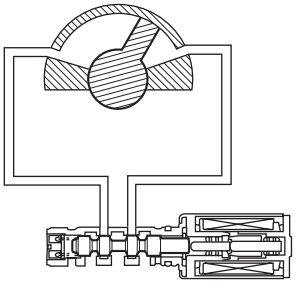

I5RW0C140036-01

Timing Retarding

When the duty ratio of the signal output from the ECM is light, the spool valve of the oil control valve moves to the right (head for the coil). By this spool valve movement, the pressurized oil is led into the chambers for timing retarding and the oil in the chambers for timing advancing is drained. This operations actuate the rotor and result in the retarded timing of the intake valve.

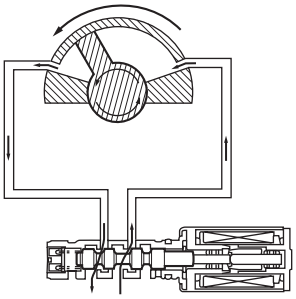

I5RW0C140037-01

Targeted Timing Varying Operation

Driving condition	Valve timing	Target of control	Effect
Engine running at idle speed	Most retarded	To shorten the valve opening overlap in order to prevent the exhaust gas counterflow to intake manifold.	Stabilization of the engine rotation at idle speed.
Average engine load range	To the advanced side	To lengthen the valve opening overlap in order to enhance the internal exhaust gas recirculation and reduce the pumping loss.	Improvement of the fuel efficiency. Lowering of the exhaust emission.
Light engine load range	To the retarded side	To shorten the valve opening overlap in order to prevent the exhaust gas counterflow to intake manifold.	Keeping of the engine stability.
Low or average engine speed range with heavy engine load	To the advanced side	To advance the closing timing of the intake valve in order to improve the volumetric efficiency.	Improvement of generating the engine torque at low and average engine speed.
High engine speed range with heavy engine load	To the retarded side	To retard the closing timing of the intake valve in order to improve the volumetric efficiency.	Improvement of generating the engine power.
Low engine coolant temperature	Most retarded	To shorten the valve opening overlap in order to prevent the exhaust gas counterflow to intake manifold and reduce the fuel increasing. To slow the fast idle speed of the engine as a result of stabilizing the engine idling.	Stabilization of the fast idling of the engine. Improvement of the fuel efficiency.
At engine starting and stopping	Most retarded	To shorten the valve opening overlap in order to prevent the exhaust gas counterflow to intake manifold.	Improvement of start ability.

Diagnostic Information and Procedures

Compression Check

S7RW0A1404001

Check compression pressure on all 4 cylinders as follows:

1) Warm up engine to normal operating temperature.
2) Stop engine after warming up.

NOTE

After warming up engine, place transmission gear shift lever in “Neutral” (shift selector lever to “P” range for A/T model), and set parking brake and block drive wheels.

3) Remove air cleaner assembly with air suction hose referring to “Air Cleaner Assembly Removal and Installation”.
4) Remove cylinder head upper cover.
5) Remove ignition coil assemblies and all spark plugs referring to “Spark Plug Removal and Installation in Section 1H”.
6) Disconnect fuel injector wires at the coupler.
7) Install special tools (Compression gauge) into spark plug hole.

Special tool
(A): 09915–64512
(B): 09915–64530
(C): 09915–67010

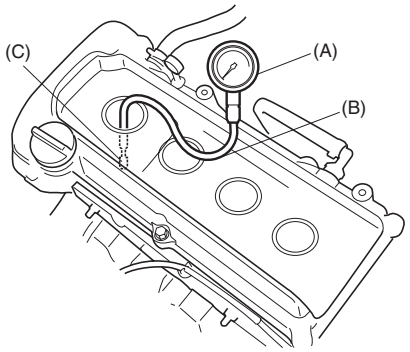

I3RH0B140009-01

8) Disengage clutch (1) (to lighten starting load on engine) for M/T vehicle, and depress accelerator pedal (2) all the way to make throttle fully open.

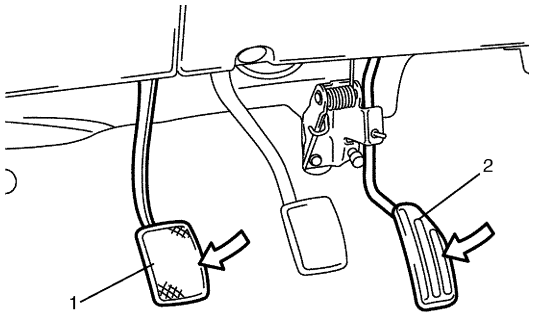

I2RH0B140005-01

9) Crank engine with fully charged battery, and read the highest pressure on compression gauge.

NOTE

- **For measuring compression pressure, crank engine at least 250 r/min. by using fully charged battery.**
- **If measured compression pressure is lower than limit value, check installation condition of special tool. If it is properly installed, possibility is compression pressure leakage from where piston ring and valve contact.**

Compression pressure
Standard: 1400 kPa (14.0 kgf/cm^2, 199.0 psi)
Limit: 1100 kPa (11.0 kgf/cm^2, 156.0 psi)
Max. difference between any two cylinders: 100 kPa (1.0 kgf/cm^2, 14.2 psi)

10) Carry out Steps 7) through 9) on each cylinder to obtain 4 readings.
11) After checking, install spark plugs and ignition coil assemblies with high-tension cord referring to “Spark Plug Removal and Installation in Section 1H”.
12) Connect ignition coil couplers.
13) Connect fuel injector wires at the coupler.
14) Install cylinder head upper cover.
15) Install air cleaner assembly with air section hose referring to “Air Cleaner Assembly Removal and Installation”.

Engine Vacuum Check

S7RW0A1404002

The engine vacuum that develops in the intake line is a good indicator of the condition of the engine. The vacuum checking procedure is as follows:

1) Warm up engine to normal operating temperature.

NOTE

After warming up engine, place transmission gear shift lever in “Neutral” (shift selector lever to “P” range for A/T model), and set parking brake and block drive wheels.

2) Stop engine and turn off the all electric switches.
3) Remove air cleaner assembly with air suction hose referring to “Air Cleaner Assembly Removal and Installation”.
4) Remove PCV hose (1) from PCV valve (2).

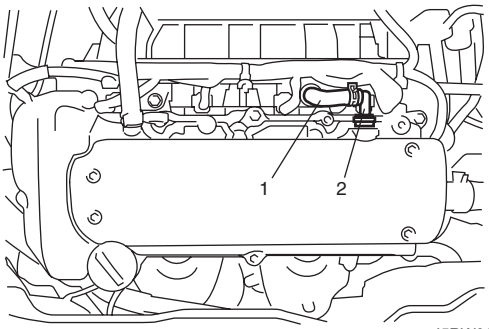

I5RW0C140038-01

5) Connect special tool (Vacuum gauge) to PCV hose (1).

Special tool
(A): 09915–67311

6) Blind PCV valve (2) using tape (3) or the like.

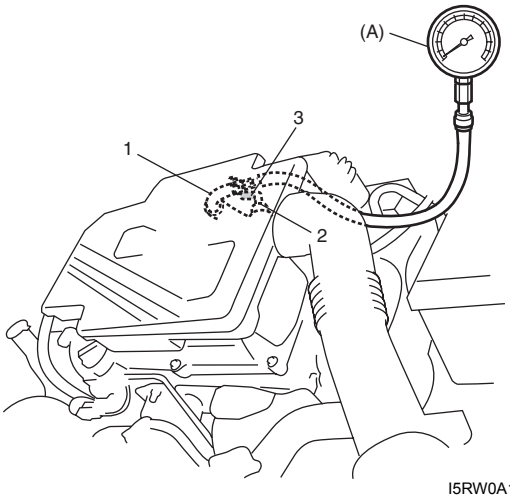

I5RW0A140003-02

7) Install air cleaner assembly with air suction hose referring to “Air Cleaner Assembly Removal and Installation”.
8) Run engine at specified idle speed and read vacuum gauge. Vacuum should be within specification.

   Vacuum specification (at sea level)
   59 – 73 kPa (45 – 55 cmHg, 17.7 – 21.6 in.Hg) at specified idle speed

9) After checking, disconnect special tool (Vacuum gauge) from PCV valve.
10) Detach blind cap from PCV valve.
11) Install air cleaner assembly with air suction hose referring to “Air Cleaner Assembly Removal and Installation”.

Valve Lash (Clearance) Inspection

S7RW0A1404003

1) Remove negative cable at battery.
2) Remove cylinder head cover referring to “Cylinder Head Cover Removal and Installation”.
3) Remove right side engine under cover, if necessary.
4) Using 17 mm wrench, turn crankshaft pulley (1) clockwise until cam lobes (2) become perpendicular to shim faces (3) at valves “1” and “7” as shown in figure.
5) Check valve lashes with thickness gauge (4) according to the following procedure.
   a) Check valve lashes at valves “1” and “7”.
   b) Turn camshafts by 90° (by turning crankshaft with wrench).
   c) Make sure that cam lobes are perpendicular to shim faces at valves to be checked (in this case, “3” and “8”), if not, adjust it by turning crankshaft. Check valve lashes.
   d) In the same manner as b) – c), check valve lashes at valves “4” and “6”.
   e) In the same manner as b) – c) again, check valve lashes at valves “2” and “5”.

If valve lash is out of specification, record valve lash and adjust it to specification by replacing shim.

Valve clearance specification
When cold (Coolant temperature is 15 – 25 °C (59 – 77 °F)):
- **Intake: 0.18 – 0.22 mm (0.007 – 0.009 in.)**
- **Exhaust: 0.28 – 0.32 mm (0.011 – 0.013 in.)**

When hot (Coolant temperature is 60 – 68 °C (140 – 154 °F)):
- **Intake: 0.21 – 0.27 mm (0.008 – 0.011 in.)**
- **Exhaust: 0.30 – 0.36 mm (0.012 – 0.014 in.)**

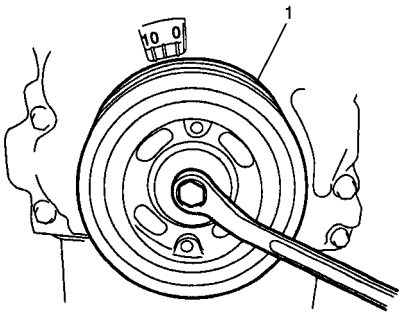

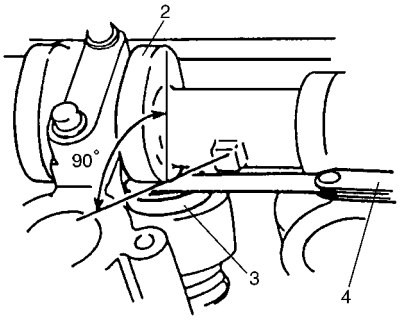

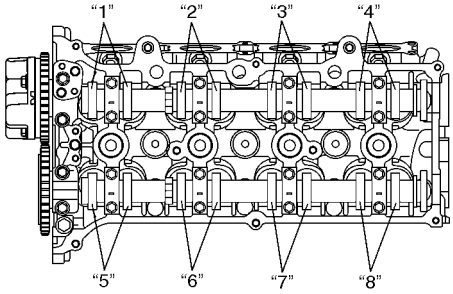

I3RM0A140004-01

Replacement of Shim

1) Close the valve whose shim (2) is to be replaced by turning crankshaft, then turn tappet (3) till its cut section (1) faces inside as shown in figure.

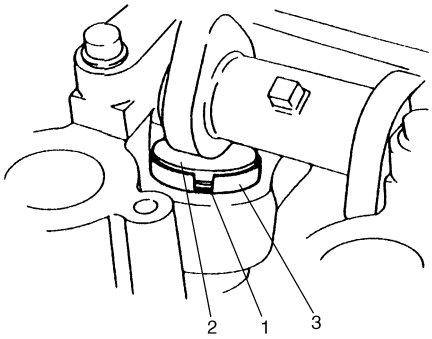

I2RH0B140006-01

2) Lift down the valve by turning crankshaft to 360°.
3) Hold tappet at that position using special tool as follows.
   a) Remove its housing bolts.
   b) Check housing No. and select special tool corresponding to housing No., referring to "Special tool selection table".

Special tool selection table

No. on camshaft housing	Embossed mark on special tool
I2	IN2
I3, I4, I5	IN345
E2	EX2
E3, E4, E5	EX345

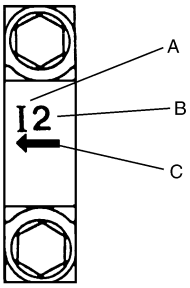

I2RH0B140011-01

A:	I: Intake side or E: Exhaust side
B:	Position from timing chain side
C:	Pointing to timing chain side

   c) Hold down the tappet so as not to contact the shim by installing special tool on camshaft housing with housing bolt (1) tighten housing bolts by hand.

   Special tool
   (A): 09916–67020
   (A): 09916–67021

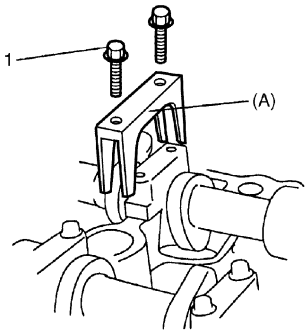

I5RW0C140003-01

4) Turn camshaft by approximately 90° clockwise and remove shim (3).

⚠ WARNING

Never put in the hand between camshaft and tappet.

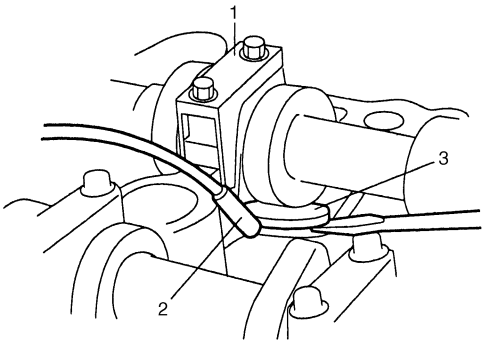

I2RH0B140013-01

1. Special tool	2. Magnet

5) Using a micrometer (2), measure the thickness of the removed shim (1), and determine replacement shim by calculating the thickness of new shim with the following formula and table.

Shim thickness specification
Intake side:
A = B + C – 0.20 mm (0.008 in.)
Exhaust side:
A = B + C – 0.30 mm (0.012 in.)
A: Thickness of new shim
B: Thickness of removed shim
C: Measured valve clearance

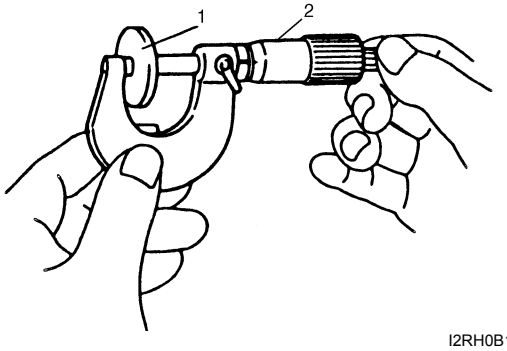

I2RH0B140014-01

For example of intake side:
When thickness of removed shim is 2.40 mm (0.094 in.), and measured valve clearance is 0.45 mm (0.018 in.).
A = 2.40 mm (0.094 in.) + 0.45 mm (0.018 in.) – 0.20 mm (0.008 in.) = 2.65 mm (0.104 in.)
Calculated thickness of new shim = 2.65 mm (0.104 in.)

6) Select new shim No. (1) with a thickness as close as possible to calculated value.

Available new shims No.

Thickness mm (in.)	Shim No.	Thickness mm (in.)	Shim No.
2.175 (0.0856)	218	2.600 (0.1024)	260
2.200 (0.0866)	220	2.625 (0.1033)	263
2.225 (0.0876)	223	2.650 (0.1043)	265
2.250 (0.0886)	225	2.675 (0.1053)	268
2.275 (0.0896)	228	2.700 (0.1063)	270
2.300 (0.0906)	230	2.725 (0.1073)	273
2.325 (0.0915)	233	2.750 (0.1083)	275
2.350 (0.0925)	235	2.775 (0.1093)	278
2.375 (0.0935)	238	2.800 (0.1102)	280
2.400 (0.0945)	240	2.825 (0.1112)	283
2.425 (0.0955)	243	2.850 (0.1122)	285
2.450 (0.0965)	245	2.875 (0.1132)	288
2.475 (0.0974)	248	2.900 (0.1142)	290
2.500 (0.0984)	250	2.925 (0.1152)	293
2.525 (0.0994)	253	2.950 (0.1161)	295
2.550 (0.1004)	255	2.975 (0.1171)	298
2.575 (0.1014)	258	3.000 (0.1181)	300

7) Install new shim facing shim No. side with tappet.

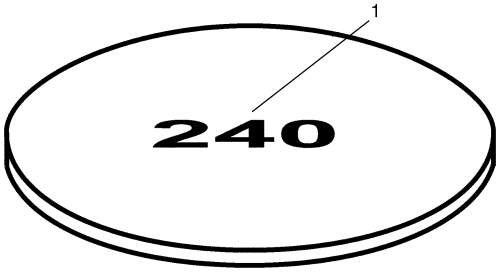

I2RH0B140015-01

8) Lift valve by turning crankshaft counterclockwise (in opposite direction against above Step 4)) and remove special tool.

Special tool
(A): 09916–67020
(A): 09916–67021

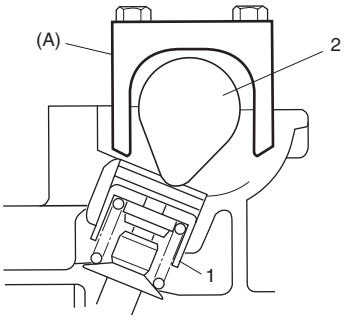

I3RM0A140006-01

1. Tappet	2. Camshaft

9) Install camshaft housing (1) and tighten bolts to specified torque.

Tightening torque
Camshaft housing bolt (a): Tighten 11 N·m (1.1 kgf-m, 8.0 lb-ft) by the specified procedure

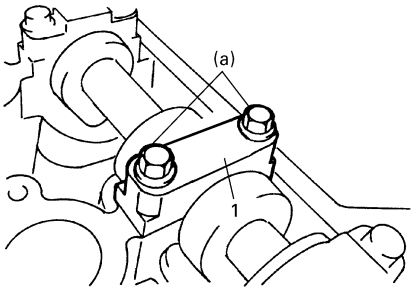

I2RH0B140149-01

10) Check valve clearance again after adjusting it.
11) After checking and adjusting all valves.
12) Install cylinder head cover referring to “Cylinder Head Cover Removal and Installation”.

Repair Instructions

Air Intake System Components

S7RW0A1406001

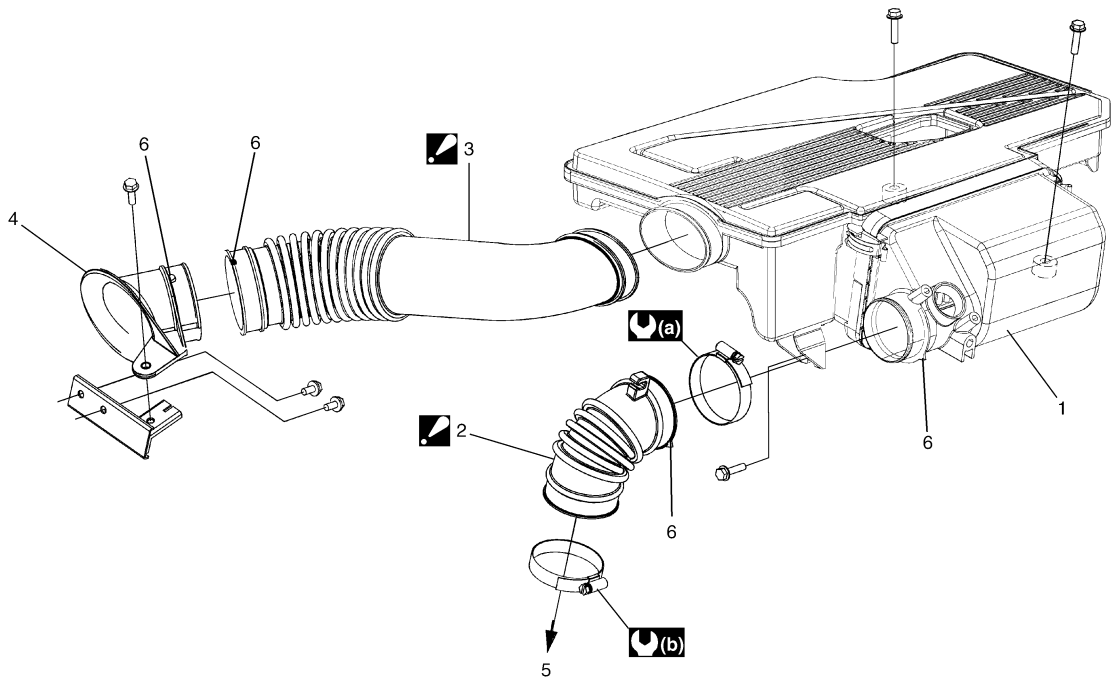

I6RW0B140001-01

1. Air cleaner assembly	5. To throttle body
2. Air cleaner outlet hose : Align marking (6) of air cleaner assembly with marking (6) of air cleaner outlet hose.	6. Marking
3. Air cleaner inlet hose : Align marking (6) of air cleaner suction pipe with marking (6) of air cleaner inlet hose.	(a) : 2 N·m (0.2 kgf-m, 1.5 lb-ft)
4. Air cleaner suction pipe	(b) : 3 N·m (0.3 kgf-m, 2.5 lb-ft)

Air Cleaner Filter Removal and Installation

S7RW0A1406002

Removal

1) Open air cleaner case (1) by unhooking its clamps (2).

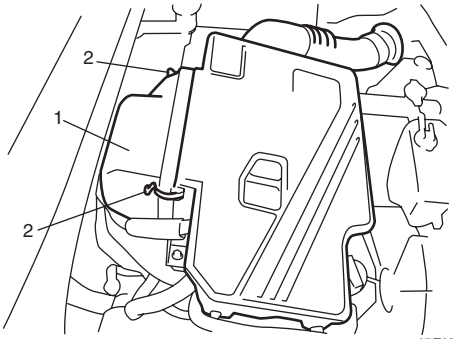

I5RW0C140004-01

2) Remove air cleaner filter from case.

Installation

Reverse removal procedure for installation.

Air Cleaner Filter Inspection and Cleaning

S7RW0A1406003

Inspection

Check air cleaner filter for dirt. Replace excessive dirty filter.

Cleaning

Blow off dust by compressed air from air outlet side of filter.

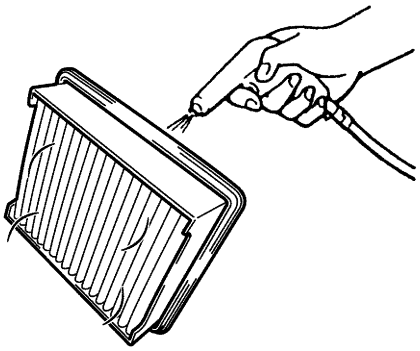

I2RH0B140150-01

Air Cleaner Assembly Removal and Installation

S7RW0A1406004

Removal

1) Disconnect negative cable at battery.
2) Disconnect MAF sensor connector (1).
3) Remove EVAP canister purge valve (2).
4) Remove air cleaner assembly (3) with air suction hose (4).

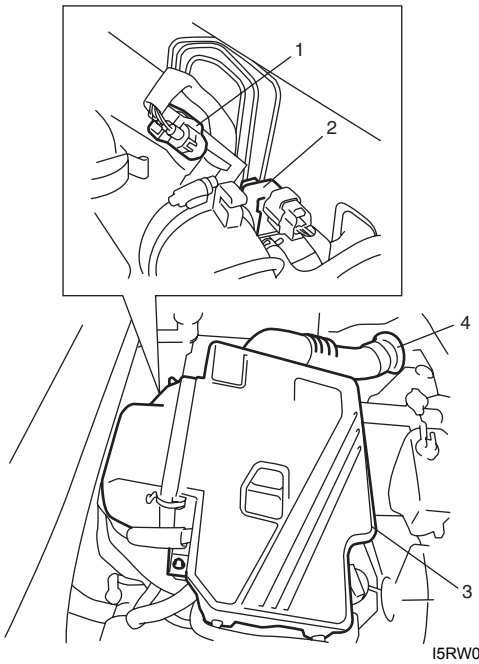

I5RW0A140004-02

Installation

Reverse removal procedure noting the following.

- Tighten EVAP canister purge valve bracket bolt to specified torque.

  Tightening torque
  EVAP canister purge valve bracket bolt: 5 N·m (0.5 kgf-m, 4.0 lb-ft)

Cylinder Head Cover Removal and Installation

S7RW0A1406005

Removal

1) Disconnect negative cable at battery.
2) Remove air cleaner assembly with air suction hose referring to “Air Cleaner Assembly Removal and Installation”.
3) Remove cylinder head upper cover (1).

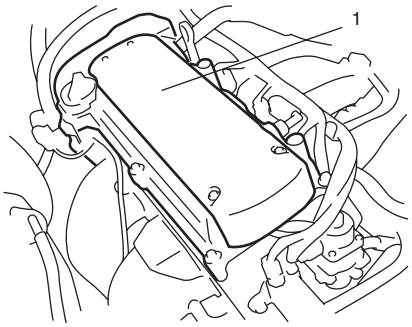

I5RW0A140005-01

4) Remove ignition coil assemblies with high-tension cord from cylinder head cover referring to “Ignition Coil Assembly (Including Ignitor) Removal and Installation in Section 1H”.
5) Remove oil level gauge (1).
6) Disconnect PCV hose (2) from PCV valve (3) and disconnect breather hose (4) from cylinder head cover.
7) Remove cylinder head cover mounting bolts in numerical order (“1” through “7”) as shown in figure.

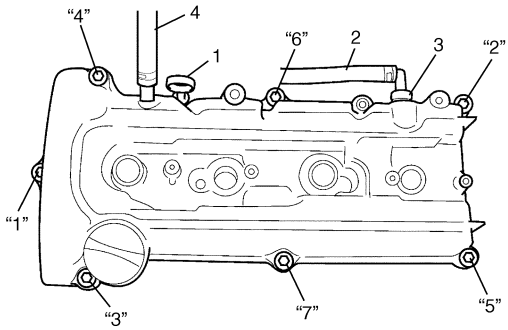

I2RH0B140033-01

8) Remove cylinder head cover (1) with cylinder head cover gasket (2) and spark plug hole gasket (3).

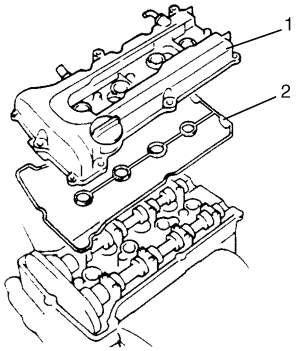

I6RS0B141004-01

Installation

1) Install new spark plug hole gaskets (1) and new cylinder head cover gasket (2) to cylinder head cover (3) as shown in figure.

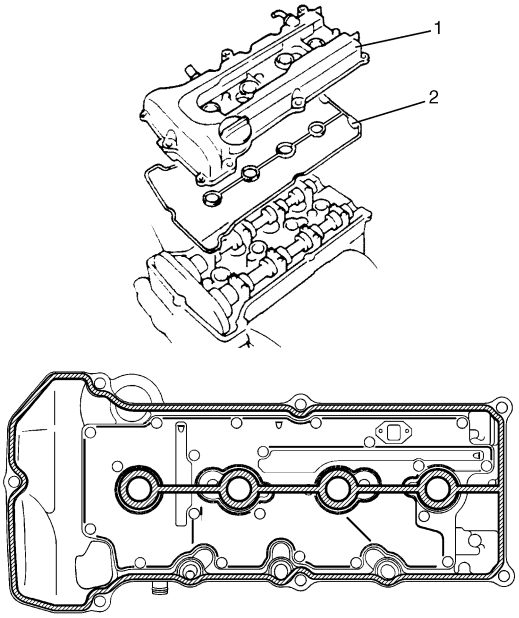

I6RS0B141005-01

2) Remove oil, old sealant, and dust from sealing surfaces on cylinder head and cover. After cleaning, apply sealant “A” to the following point.
   - Cylinder head cover gasket (1) sealing surface area (2) as shown.

     “A”: Water tight sealant 99000–31250 (SUZUKI Bond No.1207F)

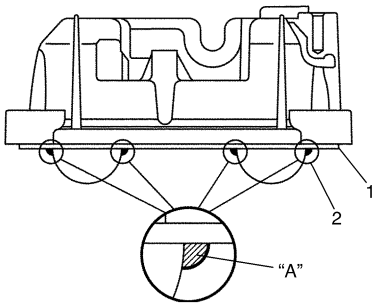

I2RH0B140036-01

   - Timing chain cover (1) and cylinder head (2) mating surface as shown.

     “A”: Water tight sealant 99000–31250 (SUZUKI Bond No.1207F)

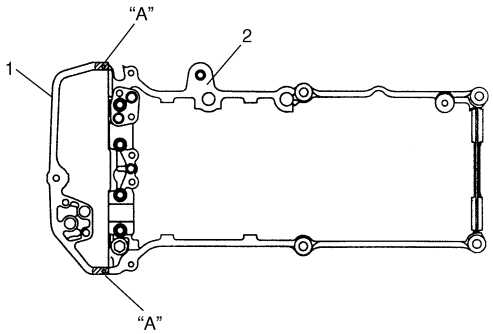

I2RH0B140037-01

3) Install cylinder head cover to cylinder head.

NOTE

When installing cylinder head cover, use care so that cylinder head cover gasket or spark plug hole gaskets will not get out of place or fall off.

4) Tightening bolts in numerical order (“1” through “7”) as shown in figure a little at a time till they are tightened to specified torque.

   Tightening torque
   Cylinder head cover bolt (a): Tighten 8 N·m (0.8 kgf-m, 6.0 lb-ft) by the specified procedure

5) Connect PCV hose (2) to PCV valve (3).
6) Connect breather hose (4).
7) Install oil level gauge (1).

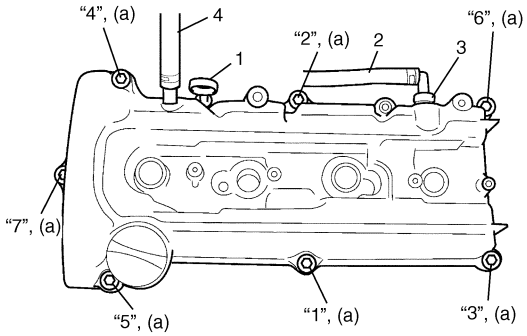

I3RH0B140016-01

8) Install ignition coil assemblies to cylinder head cover referring to “Ignition Coil Assembly (Including Ignitor) Removal and Installation in Section 1H”.
9) Connect ignition coil couplers and clamp harness securely.
10) Install cylinder head upper cover.
11) Install air cleaner assembly referring to “Air Cleaner Assembly Removal and Installation”.
12) Connect negative cable at battery.

Throttle Body and Intake Manifold Components

S7RW0A1406006

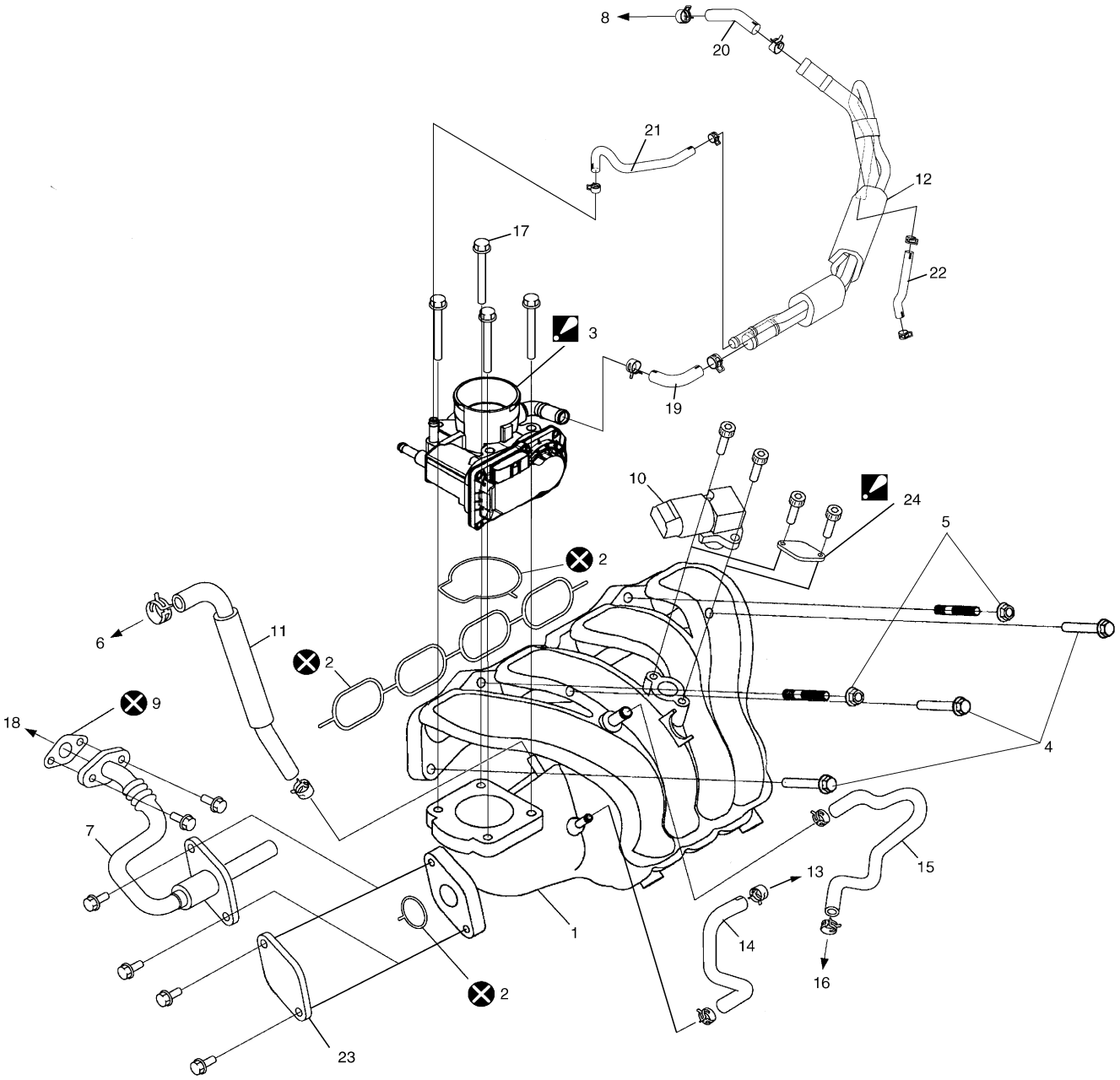

I6RW0D140001-01

1. Intake manifold	8. To cylinder head cover	15. Brake booster hose	22. Throttle body outlet water hose No.2
2. O-ring	9. Gasket (with EGR)	16. To brake booster	23. EGR pipe plate (without EGR)
3. Throttle body: Do not disassemble	10. MAP sensor	17. Throttle body mounting bolt	24. MAP sensor plate (without MAP sensor) : Be sure to direct paint mark to upward.
4. Intake manifold bolt	11. PCV valve hose	18. To EGR valve	⊗ : Do not reuse.
5. Intake manifold nut	12. Breather pipe	19. Breather hose No.1	
6. To PCV valve	13. To EVAP canister purge valve hose	20. Breather hose No.2	
7. EGR pipe	14. EVAP canister purge valve hose	21. Throttle body outlet water hose No.1	

Throttle Body On-Vehicle Inspection

S7RW0A1406007

Check electric throttle body assembly referring to “Throttle Valve Operation Check” and “Electric Throttle Body Assembly Operation Check” under “Electric Throttle Body Assembly On-Vehicle Inspection in Section 1C”.

Electric Throttle Body Assembly Removal and Installation

S7RW0A1406008

⚠ CAUTION

Never disassemble electric throttle body. Disassembly will spoil its original performance. If faulty condition is found, replace it with new one.

Removal

1) Disconnect negative cable at battery.
2) Drain coolant referring to “Cooling System Draining in Section 1F”.
3) Remove air cleaner assembly referring to “Air Cleaner Assembly Removal and Installation”.
4) Disconnect engine coolant hoses (1) and breather hose (2) from electric throttle body assembly (3).
5) Disconnect connector (4) from electric throttle body assembly.

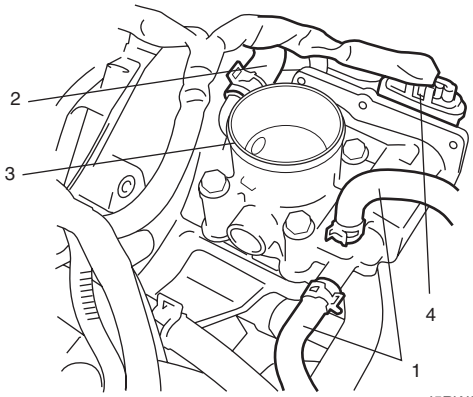

I5RW0C140006-01

6) Remove electric throttle body assembly from intake manifold.

Installation

1) Clean mating surfaces and install new throttle body gasket (1) to intake manifold.

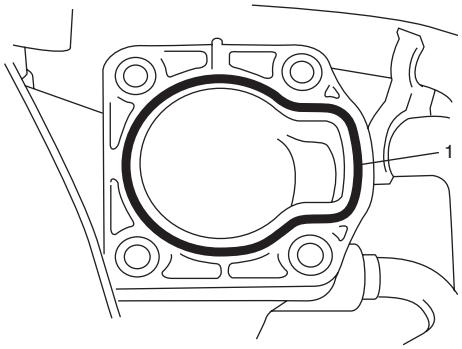

I4RS0B140005-01

2) Install electric throttle body assembly (1) to intake manifold.
3) Connect connector (2) to electric throttle body assembly securely.
4) Connect engine coolant hoses (3) and breather hose (4) to electric throttle body assembly (1).

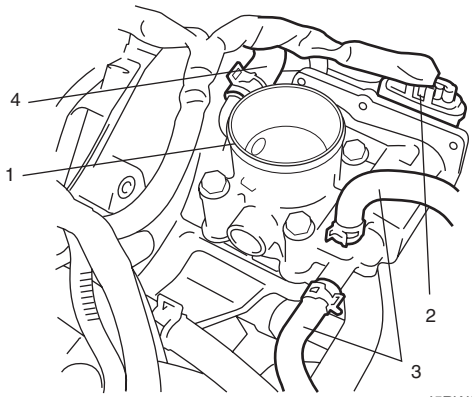

I5RW0C140008-01

5) Install air cleaner assembly referring to “Air Cleaner Assembly Removal and Installation”.
6) Refill coolant referring to “Cooling System Flush and Refill in Section 1F”.
7) Connect negative cable at battery.

Throttle Body Cleaning

S7RW0A1406009

Clean electric throttle body assembly referring to “Throttle Valve Visual Check” under “Electric Throttle Body Assembly On-Vehicle Inspection in Section 1C”.

Intake Manifold Removal and Installation

S7RW0A1406010

Removal

1) Remove throttle body referring to “Electric Throttle Body Assembly Removal and Installation”.
2) Disconnect MAP sensor connector (1).
3) Disconnect the following hoses:
   - Brake booster hose (2) from cylinder head cover
   - PCV hose (3) from PCV valve
4) Remove EGR pipe bolt (4) from EGR valve.

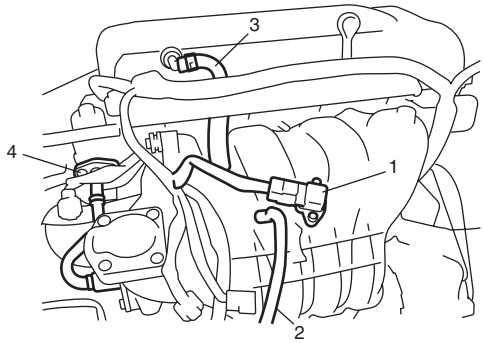

I5RW0A140007-02

5) Remove intake manifold (1) and EGR pipe (2) from cylinder head, and then remove its gasket and O-ring.

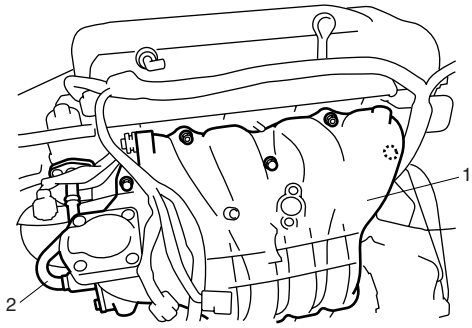

I3RM0A140018-01

Installation

Reverse removal procedure for installation noting the following.

- Use new gasket and O-ring.
- Tighten EVAP canister purge valve bracket bolt to specified torque.

  Tightening torque
  EVAP canister purge valve bracket bolt: 5 N·m (0.5 kgf-m, 4.0 lb-ft)

- Install intake manifold bolt (2) and nut (1) as shown in figure.

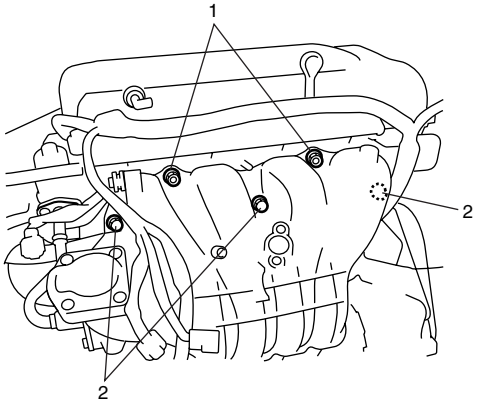

I4RS0A140005-01

- Check to ensure that all removed parts are back in place.
  Reinstall any necessary parts which have not been reinstalled.
- Refill cooling system referring to “Cooling System Flush and Refill in Section 1F”.
- Upon completion of installation, turn ignition switch ON but engine OFF and check for fuel leaks.
- Finally, start engine and check for engine coolant leaks.

Engine Mountings Components

S7RW0A1406011

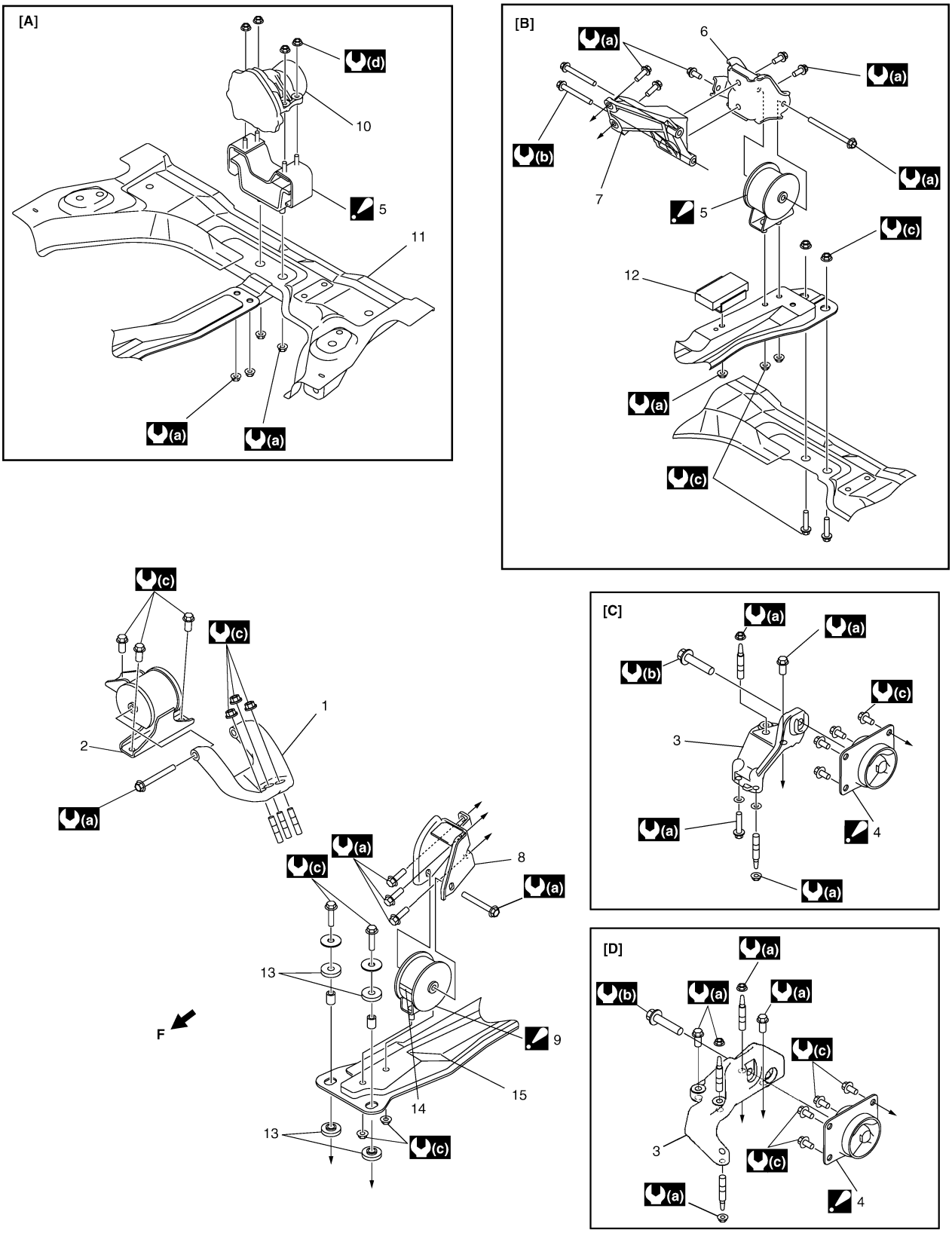

I6RW0D140002-01

[A]: For 4WD model	4. Engine left mounting : Be sure to direct paint mark to forward.	12. Dynamic damper
[B]: For 2WD model	5. Engine rear mounting : Be sure to direct paint mark to forward.	13. Mounting member cushion
[C]: For M/T model	6. Engine rear mounting No.1 bracket	14. Yellow mark
[D]: For A/T model	7. Engine rear mounting No.2 bracket	15. Mounting member

F: Vehicle forward	8. Engine front mounting bracket	(a) : 55 N·m (5.5 kgf-m, 40.0 lb-ft)
1. Engine right mounting bracket	9. Engine front mounting : Be sure to direct yellow mark to forward.	(b) : 95 N·m (9.5 kgf-m, 69.0 lb-ft)
2. Engine right mounting	10. Transfer	(c) : 65 N·m (6.5 kgf-m, 47.0 lb-ft)
3. Engine left mounting bracket	11. Suspension frame	(d) : 25 N·m (2.5 kgf-m, 18.0 lb-ft)

Engine Assembly Removal and Installation

S7RW0A1406012

Removal

1) Relieve fuel pressure according to “Fuel Pressure Relief Procedure in Section 1G”.
2) Disconnect negative and positive cable at battery.
3) Disconnect ECM connectors.
4) Remove battery and battery tray with ECM.
5) Remove right and left side engine under covers.
6) Remove A/C compressor belt by referring to “Compressor Drive Belt Removal and Installation: Manual Type in Section 7B” or “Compressor Drive Belt Removal and Installation: Automatic Type in Section 7B”.
7) Drain engine oil referring to “Engine Oil and Filter Change in Section 0B”.
8) Drain transaxle oil referring to “Manual Transaxle Oil Change in Section 5B” or “A/T Fluid Change in Section 5A”.
9) Drain transfer oil referring to “Transfer Oil Change in Section 3C”.
10) Drain coolant referring to “Cooling System Draining in Section 1F”
11) Remove air cleaner assembly referring to “Air Cleaner Assembly Removal and Installation”.
12) With hose connected, detach A/C compressor from its bracket referring to “Compressor Assembly Removal and Installation: Manual Type in Section 7B” or “Compressor Assembly Removal and Installation: Automatic Type in Section 7B”.

⚠ CAUTION

Suspend removed A/C compressor at a place where no damage will be caused during removal and installation of engine assembly.

13) Remove cylinder upper cover (1).

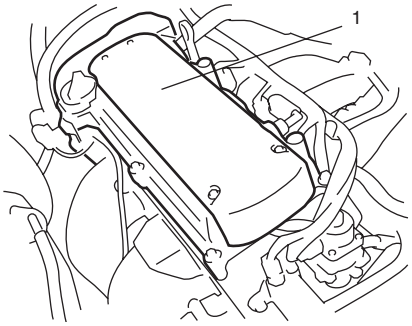

I5RW0A140009-01

14) Disconnect the following electric wires/connectors and each clamps.
    - TP sensor (1)
    - MAP sensor (2)
    - ECT sensor (3)
    - EGR valve (4)
    - CMP sensor (5)
    - Ignition coil assembly (6)
    - Injector (7)
    - HO2S (8)
    - Oil control valve (9) (for engine with VVT system)
    - Engine oil pressure switch (10)
    - CKP sensor (12)
    - Knock sensor (13)
    - Generator (14)
    - Starting motor (15)
    - Ground terminal (16) from cylinder block
    - Battery ground cable (17) from transaxle
    - Back-up light switch (18) (for M/T model)
    - Torque sensor (19)
    - P/S motor (20)
    - Output shaft speed sensor (VSS) (29) (for A/T model)
    - Solenoid valve (30) (for A/T model)
    - Transmission range sensor (31) (for A/T model)
    - Input shaft speed sensor (32) (for A/T model)
15) Disconnect the following cables, and remove control cable bracket (23)
    - Gear select control cable (21) (for M/T model)
    - Gear shift control cable (22) (for M/T model)
    - A/T select cable (33) (for A/T model)
16) Disconnect the following hoses.
    - Brake booster hose (24) from intake manifold
    - Radiator inlet and outlet hoses (25) from radiator
    - Heater inlet and outlet hoses (26) from heater core
    - Fuel feed hose (27) from fuel feed pipe
    - Fuel vapor hose (11) from fuel vapor pipe
    - Clutch hose (28) from transaxle (for M/T model)
    - A/T fluid cooler hoses (for A/T model)

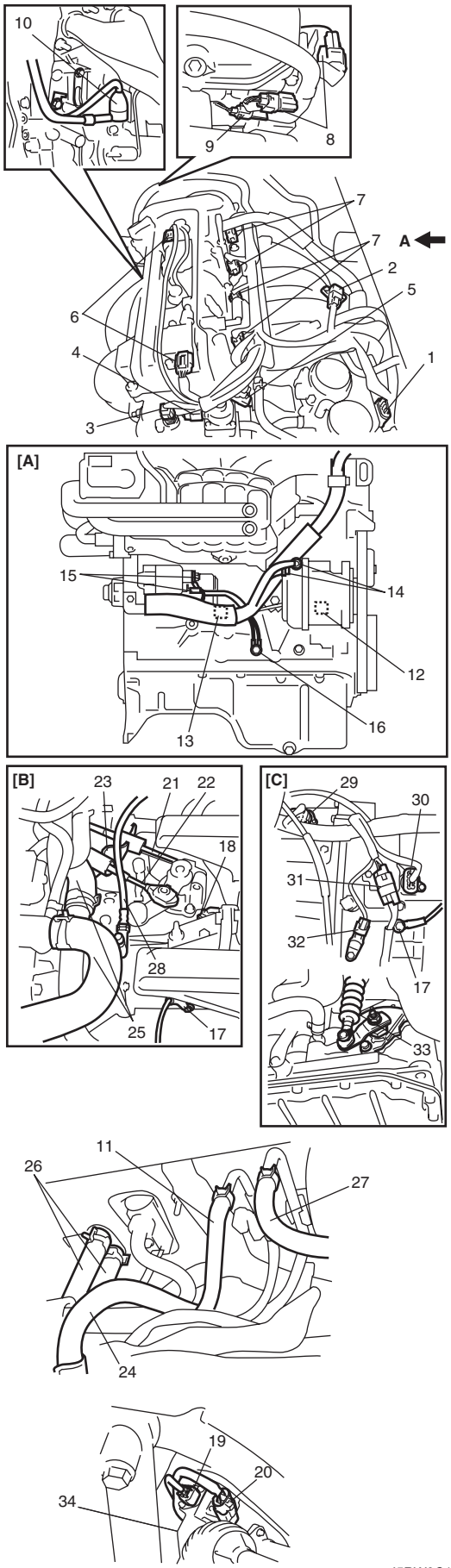

I5RW0C140010-01

[A]: View A	[C]: For A/T model
[B]: For M/T model	34. steering gear box

17) Remove oil pressure switch bracket (1).

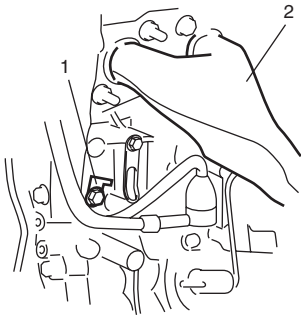

I5RW0A140011-01

2. Exhaust manifold

18) Remove suspension control arm referring to “Suspension Control Arm Removal and Installation in Section 2B”.
19) Disconnect right and left drive shaft joints from differential gear referring to “Front Drive Shaft Assembly Removal and Installation: Front in Section 3A”.
20) Remove exhaust No.1, No.2 and center pipes referring to “Exhaust System Components in Section 1K”.
21) Disconnect propeller shaft referring to “Propeller Shaft Assembly Removal and Installation in Section 3D” (for 4WD model).
22) Disconnect steering lower shaft from pinion shaft referring to “Steering Lower Shaft Removal and Installation in Section 6B”.
23) Fix radiator to body with rope in order to avoid the radiator fall off when front lower cross member lowered.
24) Support front suspension frame, front lower cross member and oil pan using jack at hatched parts (1) indicated in figure.

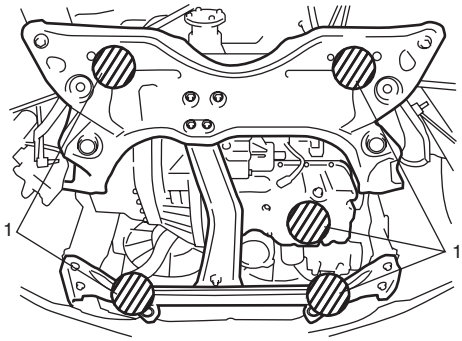

I5RW0A140012-01

25) Remove engine right mounting bracket (1) and engine left mounting bush bolt (2).

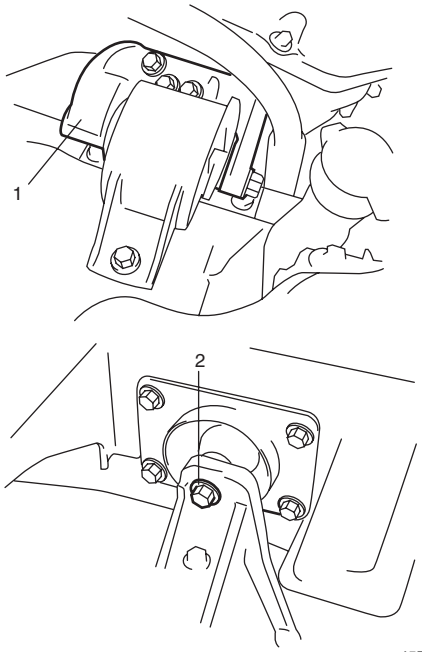

I5RW0C140012-01

26) Remove suspension frame mounting bolts and (1) front lower cross member bolts (2).

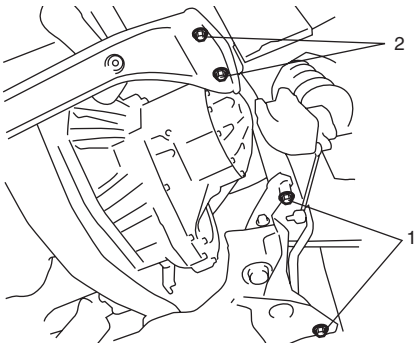

I5RW0A140014-01

27) Lower engine with transaxle, front suspension frame, front lower cross member, transfer (for 4WD model) and steering gear case.

⚠ CAUTION

Before lowering engine, in order to avoid damage to A/C compressor, make clearance by rising it.

28) Disconnect steering gear case from suspension frame referring to “Steering Gear Case Assembly Components in Section 6C”, if necessary.
29) Disconnect transfer from suspension frame referring to “Transfer Dismounting and Remounting in Section 3C”, if necessary.
30) Disconnect transaxle from engine referring to “Manual Transaxle Unit Dismounting and Remounting in Section 5B” or “Automatic Transaxle Unit Dismounting and Remounting in Section 5A”, if necessary.
31) Remove clutch cover and clutch disk referring to “Clutch Cover, Clutch Disc and Flywheel Removal and Installation in Section 5C”, if necessary.

Installation

1) Install clutch cover and clutch disk referring to “Clutch Cover, Clutch Disc and Flywheel Removal and Installation in Section 5C”, if removed.
2) Connect transaxle to engine referring to “Manual Transaxle Unit Dismounting and Remounting in Section 5B” or “Automatic Transaxle Unit Dismounting and Remounting in Section 5A”, if removed.
3) Connect transfer to suspension frame referring to “Transfer Dismounting and Remounting in Section 3C”, if removed.
4) Connect steering gear case to suspension frame referring to “Steering Gear Case Assembly Components in Section 6C”, if removed.
5) Lift engine with transaxle, front suspension frame, front lower cross member, transfer and steering gear case into engine compartment with jack.

⚠ CAUTION

Before lifting engine, in order to avoid damage to A/C compressor, make clearance by rising it.

6) Install engine right mounting bracket (1) and engine left mounting bush bolt (2), and then tighten bolt and nuts to specified torque.

Tightening torque
Engine right mounting bracket nut (a): 65 N·m (6.5 kgf-m, 47.0 lb-ft)
Engine right mounting bush bolt (b): 55 N·m (5.5 kgf-m, 40.0 lb-ft)
Engine left mounting bush bolt (c): 85 N·m (8.5 kgf-m, 61.5 lb-ft)

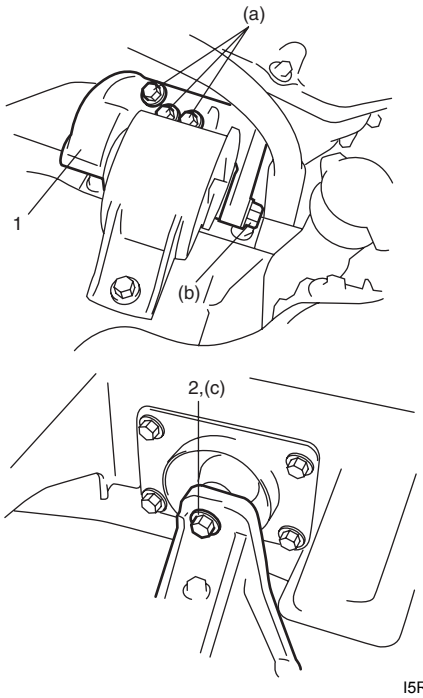

I5RW0C140031-01

7) Install suspension frame mounting bolts (1) and front lower cross member bolts (2). And then tighten bolts to specified torque.

Tightening torque
Suspension frame mounting bolt (a): 150 N·m (15.0 kgf-m, 108.5 lb-ft)
Front lower cross member bolt (b): 55 N·m (5.5 kgf-m, 40.0 lb-ft)

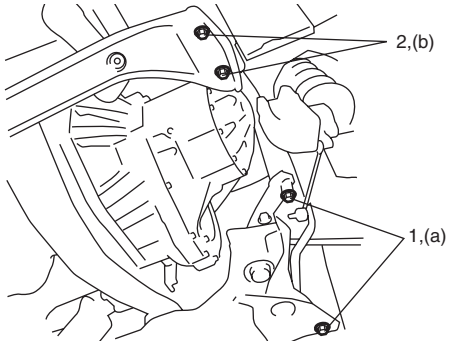

I5RW0A140016-01

8) Connect steering lower shaft from pinion shaft referring to “Steering Lower Shaft Removal and Installation in Section 6B”.

9) Connect propeller shaft referring to “Propeller Shaft Assembly Removal and Installation in Section 3D” (for 4WD model)

10) Install exhaust No.1, No.2 and center pipes referring to “Exhaust System Components in Section 1K”.

11) Reverse disconnected hoses, cables and electric wires for connection noting the following.
- Tighten bolts and nuts to specified torque.

Tightening torque
Starting motor terminal nut (a): 11 N·m (1.1 kgf-m, 8.0 lb-ft)
Generator terminal nut (b): 5 N·m (0.5 kgf-m, 4.0 lb-ft)
Battery ground bolt (c): 25 N·m (2.5 kgf-m, 18.0 lb-ft)
Ground terminal bolt (d): 11 N·m (1.1 kgf-m, 8.0 lb-ft)

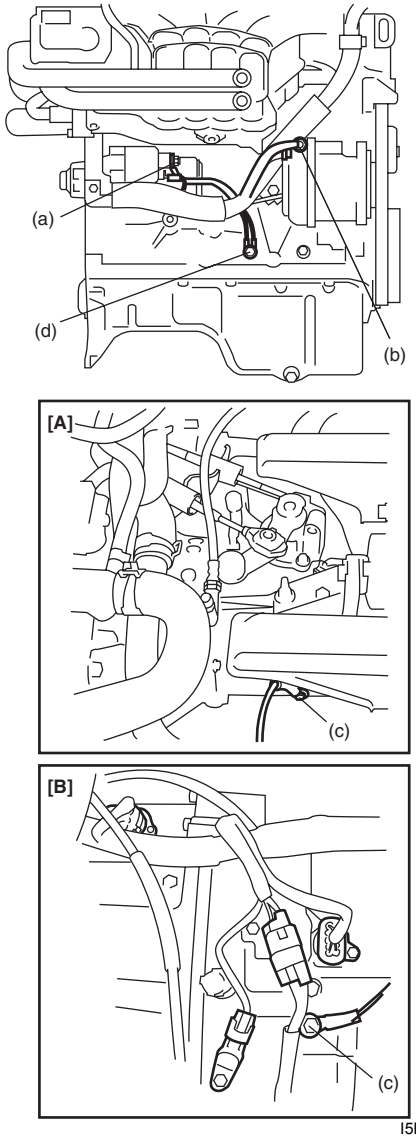

I5RW0C140013-02

[A]: For M/T model	[B]: For A/T model

12) Install oil pressure switch bracket (1).

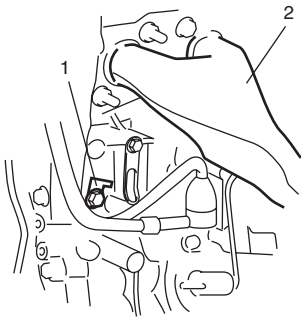

I5RW0A140011-01

2. Exhaust manifold

13) Connect right and left drive shaft joints to differential gear referring to “Front Drive Shaft Assembly Removal and Installation: Front in Section 3A”.
14) Install suspension control arm referring to “Suspension Control Arm Removal and Installation in Section 2B”.
15) Install cylinder upper cover (1).

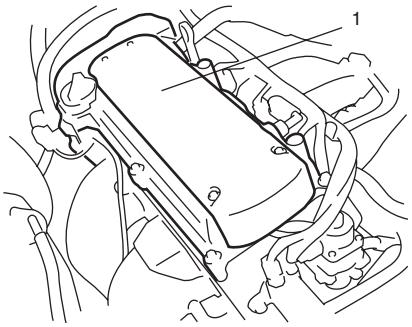

I5RW0A140009-01

16) Install A/C compressor to its bracket (if equipped) referring to “Compressor Assembly Removal and Installation: Manual Type in Section 7B” or “Compressor Assembly Removal and Installation: Automatic Type in Section 7B”.
17) Adjust A/C compressor drive belt referring to “Compressor Drive Belt Removal and Installation: Manual Type in Section 7B” or “Compressor Drive Belt Removal and Installation: Automatic Type in Section 7B”.
18) Install air cleaner assembly referring to “Air Cleaner Assembly Removal and Installation”.
19) Check to ensure that all removed parts are back in place. Reinstall any necessary parts which have not been reinstalled.
20) Refill cooling system with coolant referring to “Cooling System Flush and Refill in Section 1F”.
21) Refill engine with engine oil referring to “Engine Oil and Filter Change in Section 0B”.
22) Refill transaxle oil referring to “Manual Transaxle Oil Change in Section 5B” or “A/T Fluid Change in Section 5A”.
23) Refill transfer oil referring to “Transfer Oil Change in Section 3C”.
24) Install battery and battery tray with ECM.
25) Connect ECM wire harness.
26) Connect positive and negative cable at battery.
27) Install right and left side engine under covers.
28) Verify that there is no fuel leakage, coolant leakage, oil leakage and exhaust gas leakage at each connection.

Timing Chain Cover Components

S7RW0A1406013

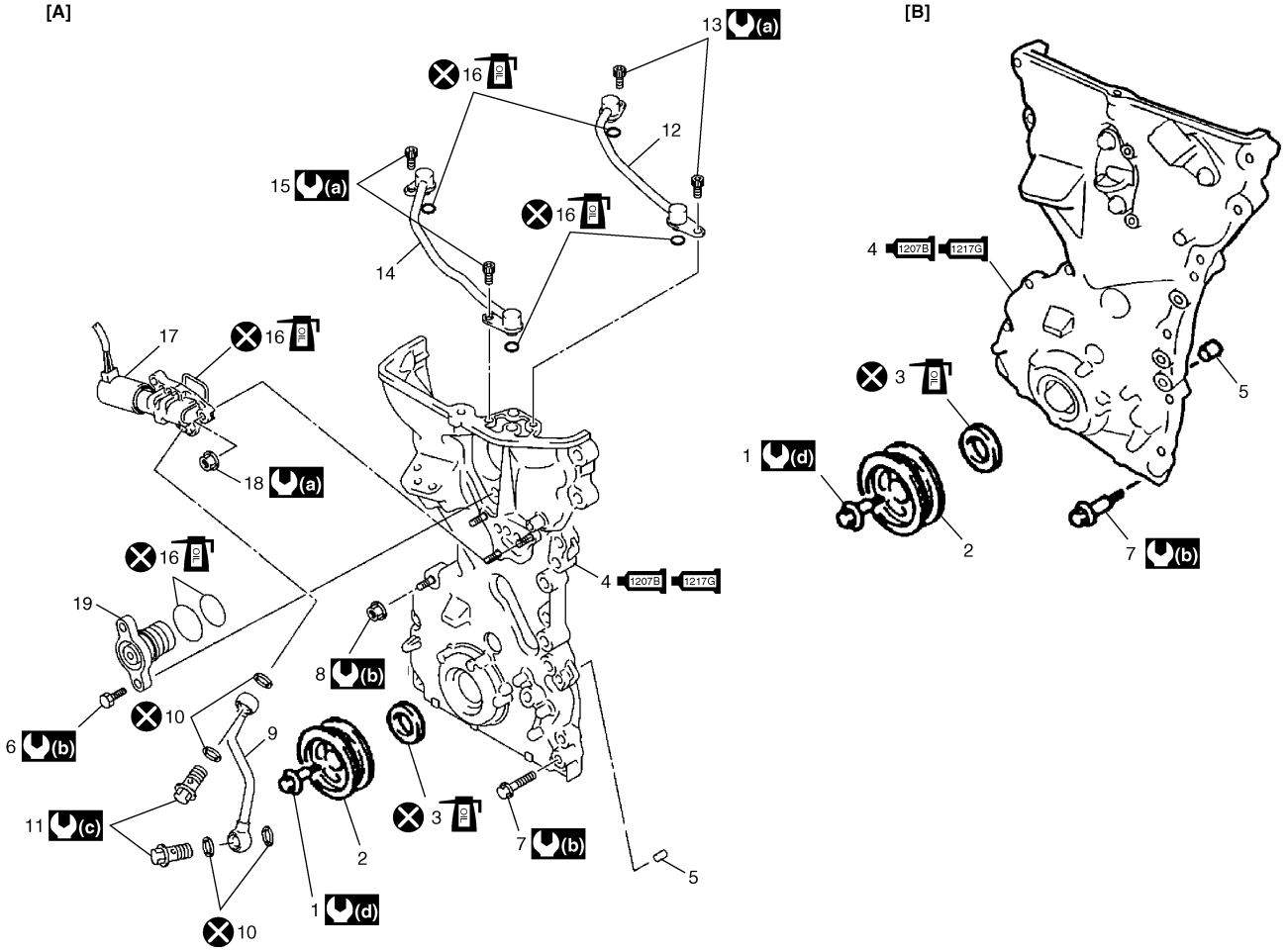

I5RW0C140041-01

[A]: For engine with VVT	8. Timing chain cover mounting nut	17. Oil control valve
[B]: For engine without VVT	9. Oil gallery pipe No.1	18. Oil control valve mounting nut
1. Crankshaft pulley bolt	10. Copper washer	19. Cap
2. Crankshaft pulley	11. Oil gallery pipe No.1 bolt	(a) : 11 N·m (1.1 kgf-m, 8.0 lb-ft)
OIL 3. Oil seal : Apply engine oil to oil seal lip.	12. Oil gallery pipe No.2	(b) : 25 N·m (2.5 kgf-m, 18.0 lb-ft)
1207B 1217G 4. Timing chain cover : Apply sealant 99000-31140 to the mating surface of cylinder and cylinder head. : Apply sealant 99000-31260 to the mating surface of timing chain cover referring to the figure of Step 4) of “Installation” under “Timing Chain Cover Removal and Installation”.	13. Oil gallery pipe No.2 bolt	(c) : 30 N·m (3.0 kgf-m, 22.0 lb-ft)
5. Pin	14. Oil gallery pipe No.3	(d) : 150 N·m (15.0 kgf-m, 108.5 lb-ft)
6. Cap bolt	15. Oil gallery pipe No.3 bolt	⊗ : Do not reuse.
7. Timing chain cover mounting bolts	OIL 16. O-ring : Apply engine oil.	

Timing Chain Cover Removal and Installation

S7RW0A1406014

⚠ **CAUTION**

- **Keep working table, tools and hands clean while overhauling.**
- **Use special care to handle aluminum parts so as not to damage them.**
- **Do not expose removed parts to dust. Keep them always clean.**

Removal

1) Remove engine assembly from vehicle referring to “Engine Assembly Removal and Installation”.
2) Remove water pump / generator drive belt referring to “Water Pump / Generator Drive Belt Removal and Installation in Section 1F”.
3) Remove crankshaft pulley bolt.
   To lock crankshaft pulley (1), use special tool with it as shown in figure.

   Special tool
   (A): 09917–68221

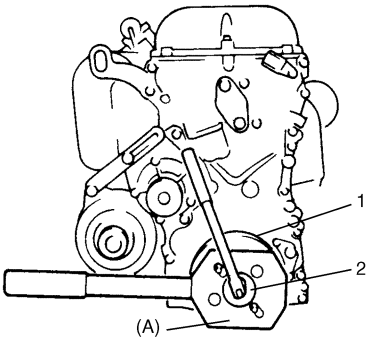

I2RH0B140051-01

4) Remove crankshaft pulley (1).
   If it is hard to remove, use special tools as shown in figure.

   Special tool
   (A): 09944–36011
   (B): 09926–58010

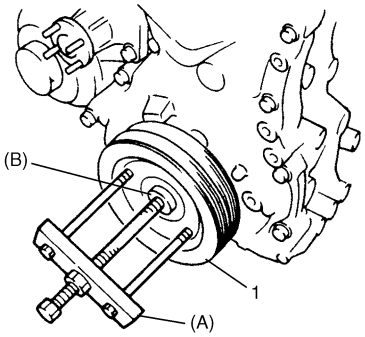

I2RH0B140052-01

5) Remove cylinder head cover referring to “Cylinder Head Cover Removal and Installation”.
6) Remove oil pan referring to “Oil Pan and Oil Pump Strainer Removal and Installation in Section 1E”.
7) Remove water pump pulley.
8) Remove A/C bracket from cylinder block.
9) For engine with VVT, remove oil gallery pipes No.2 (1) and No.3 (2).

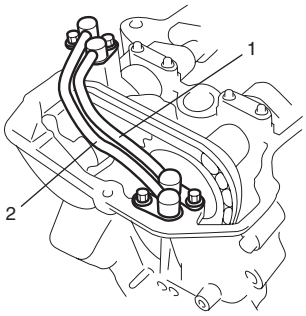

I3RH0B140021-01

10) Remove cap (1) from timing chain cover (2).
11) Remove timing chain cover (2).

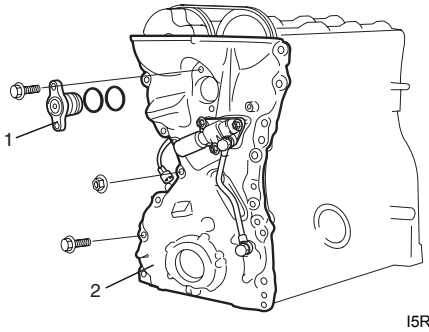

I5RW0C140042-01

12) For engine with VVT, remove oil control valve from timing chain cover referring to “Oil Control Valve Removal and Installation (For Engine with VVT)”.

Installation

1) Clean sealing surface on timing chain cover, cylinder block and cylinder head.
   Remove oil, old sealant and dust from sealing surface.
2) Install oil seal (1) to timing chain cover, if removed.

NOTE

When installing new oil seal, press fit to timing chain cover (2) by using special tool (bearing installer) as shown in figure.

Drive in dimension
"a": 1.0 mm (0.04 in.)

Special tool
(A): 09913–75810

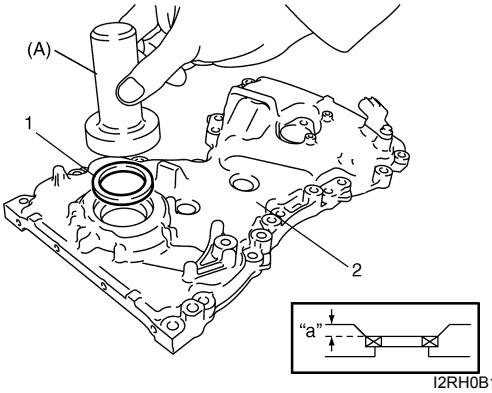

I2RH0B140058-01

3) For engine with VVT, install oil control valve to timing chain cover referring to "Oil Control Valve Removal and Installation (For Engine with VVT)".
4) Apply sealant "A" to mating surface of cylinder and cylinder head and "B" to mating surface of timing chain cover as shown in figure.

"A": Water tight sealant 99000–31140 (SUZUKI Bond No.1207B)
"B": Sealant 99000–31260 (SUZUKI Bond No.1217G)

Sealant amount for timing chain cover
Width "a": 3 mm (0.12 in.)
Height "b": 2 mm (0.08 in.)

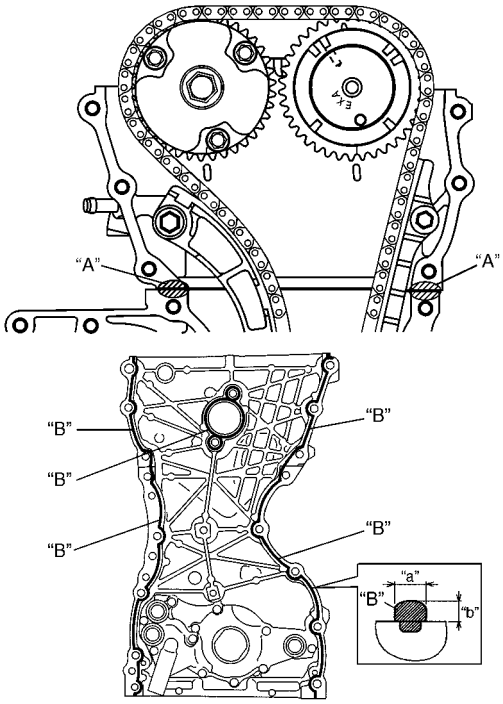

I5RW0C140043-01

5) Apply engine oil to oil seal lip, then install timing chain cover (1). Tighten bolts and nut to specified torque.

NOTE

Before installing timing chain cover, check that pin is securely fitted.

Tightening torque
Timing chain cover bolt (a): 25 N·m (2.5 kgf-m, 18.0 lb-ft)
Timing chain cover nut (b): 25 N·m (2.5 kgf-m, 18.0 lb-ft)

6) Apply engine oil to new O-rings (2) and install them to cap (3).
7) Install cap (3) to timing chain cover (1).
   Tighten bolts to specified torque.

Tightening torque
Cap bolt (c): 25 N·m (2.5 kgf-m, 18.0 lb-ft)

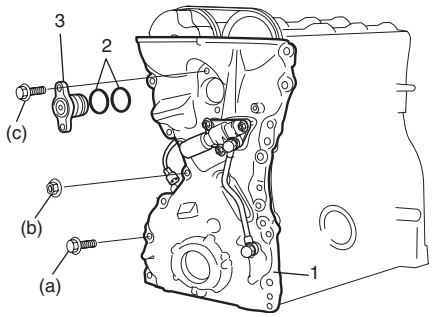

I4RS0B140011-02

8) For engine with VVT, install new O-ring (1) to oil gallery pipes No.2 (2) and No.3 (3).
9) For engine with VVT, install oil gallery pipes No.2 and No.3 to cylinder head (4) and timing chain cover (5).
   Tighten bolts to specified torque.

   Tightening torque
   Oil gallery pipe No.2 and No.3 bolt (a): 11 N·m (1.1 kgf-m, 8.0 lb-ft)

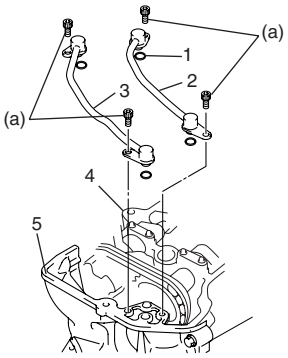

I3RH0B140027-01

10) Install water pump pulley.
11) Install cylinder head cover referring to “Cylinder Head Cover Removal and Installation”.
12) Install oil pan referring to “Oil Pan and Oil Pump Strainer Removal and Installation in Section 1E”.
13) Install crankshaft pulley (1). Tighten bolt (2) to specified torque. To lock crankshaft pulley, use special tool with it as shown in figure.

    Special tool
    (A): 09917–68221

    Tightening torque
    Crankshaft pulley bolt (a): 150 N·m (15.0 kgf-m, 108.5 lb-ft)

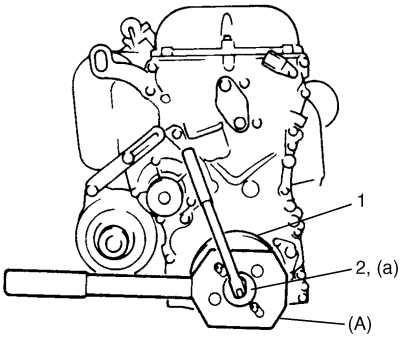

I2RH0B140056-01

14) Install engine assembly to vehicle referring to “Engine Assembly Removal and Installation”.

Timing Chain Cover Inspection

S7RW0A1406015

Oil Seal

Check oil seal lip for fault or other damage. Replace as necessary.

Timing Chain Cover (For Engine with VVT)

Inspect strainer (1) of oil passage for driving intake cam timing sprocket assembly (VVT actuator).
If clog or foreign matter exists, clean strainer.

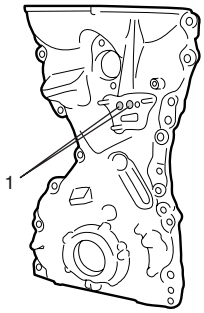

I3RH0B140028-01

Oil Control Valve Removal and Installation (For Engine with VVT)

S7RW0A1406016

Removal

Remove oil gallery pipe No.1 and oil control valve from timing chain cover.

Installation

1) Install new O-ring (4) to oil control valve (2).
2) Install oil control valve to timing chain cover (3). Tighten nuts to specification.

   Tightening torque
   Oil control valve mounting nut (a): 11 N·m (1.1 kgf-m, 8.0 lb-ft)

3) Install oil gallery pipe No.1 (1) with new copper washers (5) to timing chain cover.
   Tighten bolts to specification.

   Tightening torque
   Oil gallery pipe No.1 bolt (b): 30 N·m (3.0 kgf-m, 21.5 lb-ft)

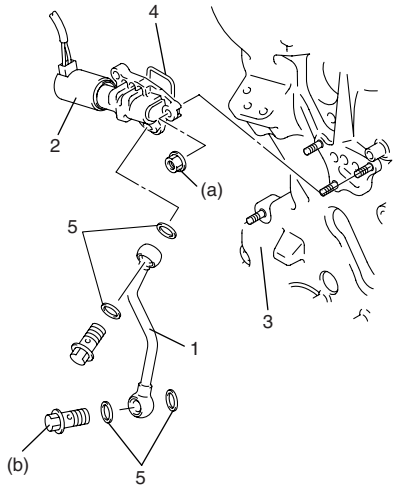

I3RM0A140027-01

Oil Control Valve Inspection (For Engine with VVT)

S7RW0A1406017

Oil Control Valve

1) Inspect strainer (1) and mating surface (2) of oil control valve for clog or damage. Clean oil control valve if clog or foreign matter is present on strainer or mating surface of oil control valve.
   Replace oil control valve if its mating surface is damaged.
2) Check resistance between terminals of oil control valve.

   <u>Oil control valve resistance</u>
   6.7 – 7.7 Ω (at 20 °C (68 °F))

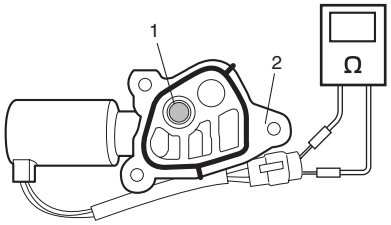

I3RM0A140028-01

Oil Gallery Pipe

Inspect oil gallery pipes No.1, No.2 (2) and No.3 (3). Replace if crack, deformation or clog exists.

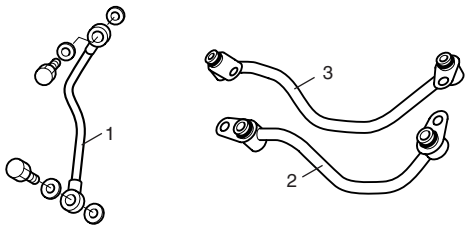

I3RH0B140030-01

Timing Chain and Chain Tensioner Components

S7RW0A1406018

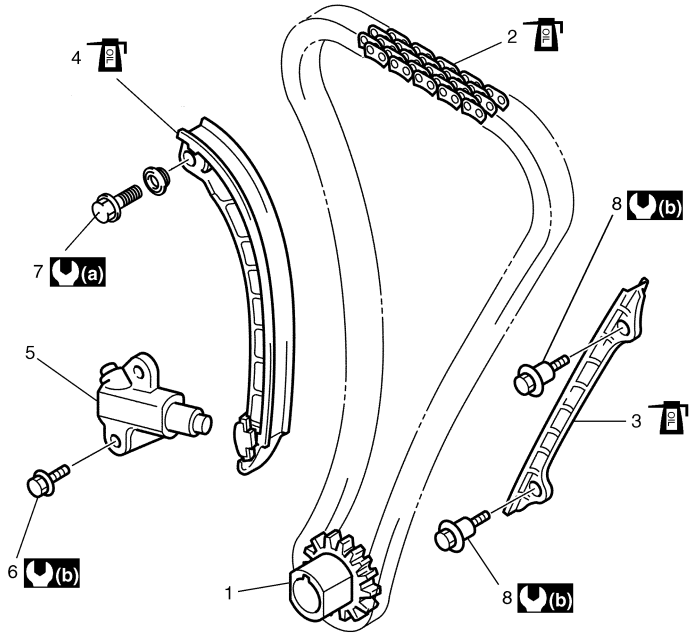

I5RW0C140044-01

1. Crankshaft timing sprocket	5. Timing chain tensioner adjuster assembly	(a) : 25 N·m (2.5 kgf-m, 18.0 lb-ft)
OIL 2. Timing chain : Apply engine oil.	6. Chain tensioner adjuster mounting bolt	(b) : 11 N·m (1.1 kgf-m, 8.0 lb-ft)
OIL 3. Timing chain No.1 guide : Apply engine oil to sliding surface.	7. Timing chain tensioner bolt	
OIL 4. Timing chain tensioner : Apply engine oil to sliding surface.	8. Timing chain No.1 guide bolt	

Timing Chain and Chain Tensioner Removal and Installation

S7RW0A1406019

Removal

⚠ CAUTION

After timing chain is removed, never turn crankshaft and camshafts independently more than its allowable turning range described in “Installation”.
If turned, interference may occur between piston and valves and valves themselves, and parts related to piston and valves may be damaged.

1) Remove timing chain cover referring to “Timing Chain Cover Removal and Installation”.
2) By turning crankshaft, align camshafts and crankshaft at specific position as follows.
   a) Align both intake and exhaust camshaft timing sprocket marks (1) with notches (2) of cylinder head respectively.
   b) Position crankshaft sprocket key (3) at upside of crankshaft as shown in figure.
3) Remove timing chain tensioner adjuster assembly (5).
4) Remove timing chain tensioner (6).
5) Remove timing chain No.1 guide (7).
6) Remove timing chain (8) with crankshaft timing sprocket (9).

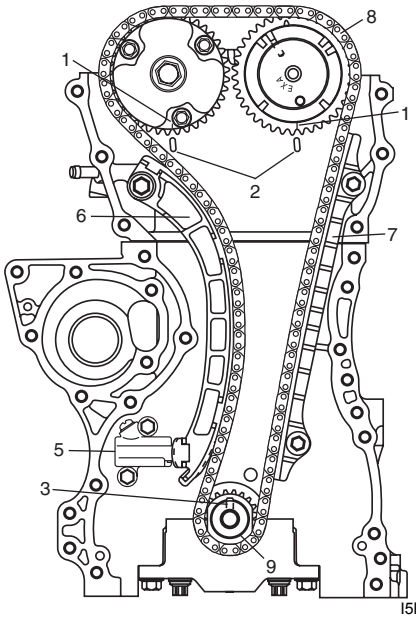

I5RW0C140016-01

Installation

⚠ CAUTION

After timing chain is removed, never turn crankshaft and camshafts independently more than such an extent (“a”, “b”) as shown in figure.
If turned, interference may occur between piston and valves and valves themselves, and parts related to piston and valves may be damaged.

1) Check that match marks (1) on intake and exhaust camshaft timing sprockets are in match with notches (2) on cylinder head as shown in figure.
2) Set key (3) and turn crankshaft to position key on upside of crankshaft.

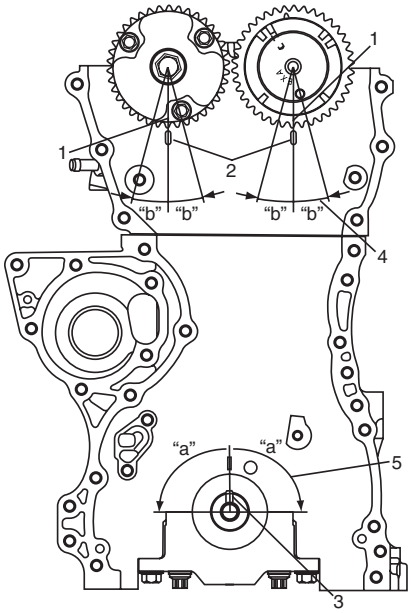

I4RS0A140021-01

“a”: 90°	4. Camshaft (IN and EX) allowable turning range. By marks on camshaft timing sprocket within 15° from notches on cylinder head on both right and left.
“b”: 15°	5. Crankshaft allowable turning range. By key on crankshaft, within 90° from top on both right and left.

3) Install timing chain to camshaft timing sprockets as follows.
   - For engine with VVT
     Install timing chain by aligning dark blue plates (1) of timing chain and triangle mark (2) on camshaft timing sprockets.
   - For engine without VVT
     Install timing chain by aligning dark blue plates (1) of timing chain and circle mark (5) on intake camshaft timing sprocket and triangle mark (5) on exhaust camshaft timing sprocket.
4) Fit crankshaft timing sprocket to timing chain by aligning gold plate (3) of timing chain and circle mark (4) on crankshaft timing sprocket. Then install crankshaft timing sprocket fitted with chain to crankshaft.

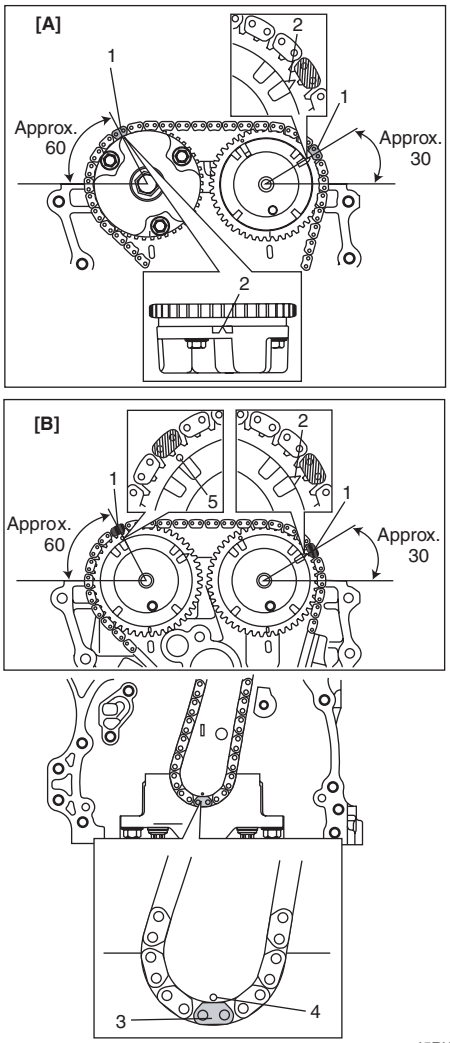

I5RW0C140018-01

[A]: For engine with VVT	[B]: For engine without VVT

5) Apply engine oil to sliding surface of timing chain No.1 guide (1) and install it as shown in figure. Tighten guide bolts to specified torque.

Tightening torque
Timing chain No.1 guide bolt (a): 11 N·m (1.1 kgf-m, 8.0 lb-ft)

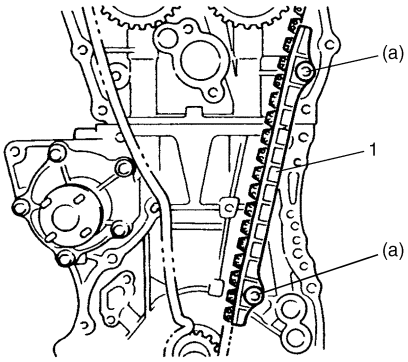

I2RH0B140062-01

6) Apply engine oil to sliding surface of chain tensioner (1) and install chain tensioner and spacer. Tighten tensioner bolt to specified torque.

Tightening torque
Timing chain tensioner bolt (a): 25 N·m (2.5 kgf-m, 18.0 lb-ft)

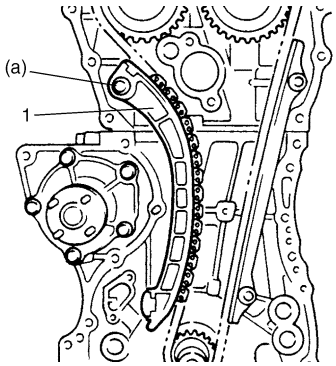

I2RH0B140063-01

7) Check that triangle mark (2) and/or circle mark (5) on intake and exhaust camshaft timing sprockets are in match with dark blue plates (1) of timing chain and match mark (4) on crankshaft timing sprocket is in match with gold plate (3) of timing chain.

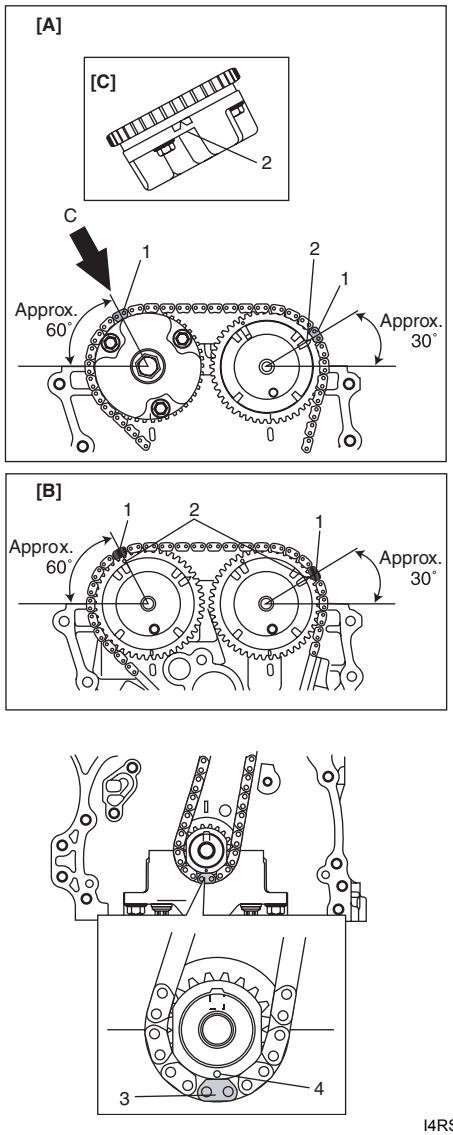

I4RS0B140012-04

[A]: For engine with VVT	[B]: For engine without VVT

8) Screw in plunger (1) by turning body (2) in arrow direction and install a retainer (3) (wire) to hold plunger in place.

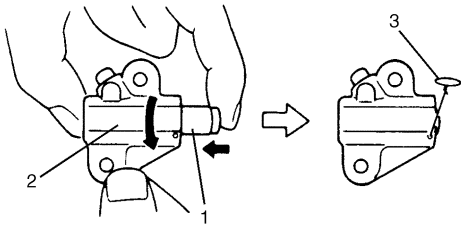

I2RH0B140065-01

9) Install timing chain tensioner adjuster assembly (1) with a retainer (2).
Tighten adjuster bolts to specified torque and then remove a retainer from chain tensioner adjuster assembly.

Tightening torque
Timing chain tensioner adjuster bolt (a): 11 N·m (1.1 kgf-m, 8.0 lb-ft)

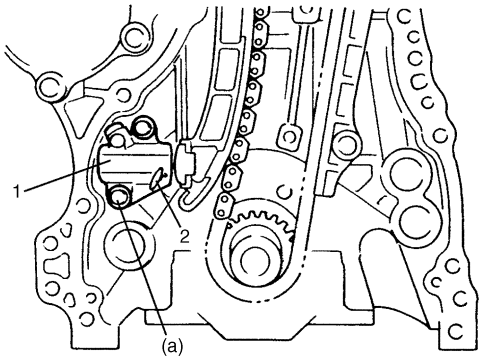

I2RH0B140066-01

10) Apply engine oil to timing chain, and then turn crankshaft clockwise by 2 revolutions and check that match marks (1) are at the following specific positions.
- Intake and exhaust camshaft timing sprockets are in match with notches (2) on cylinder head.
- Crankshaft sprocket key (3) is on upside of crankshaft as shown in figure.

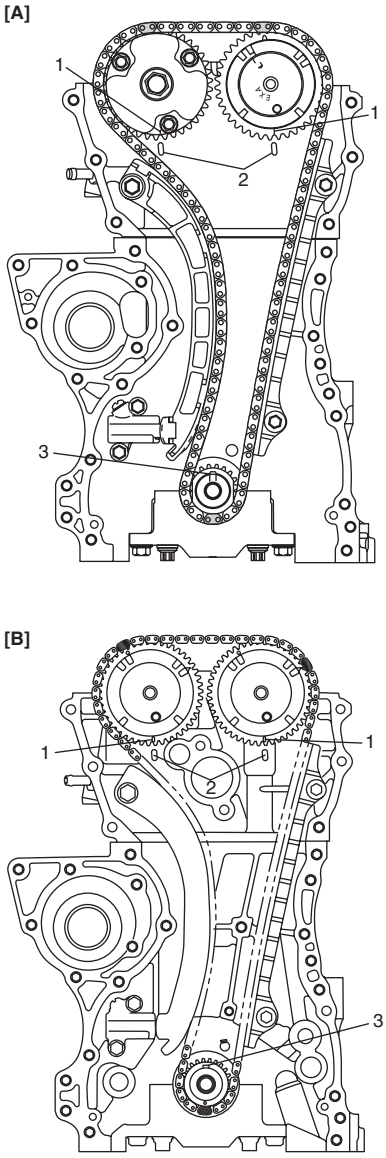

I5RW0C140022-01

[A]: For engine with VVT	[B]: For engine without VVT

11) Install timing chain cover referring to “Timing Chain Cover Removal and Installation”.

12) Perform Steps 10) to 14) of “Installation” of “Timing Chain Cover Removal and Installation”.

Timing Chain and Chain Tensioner Inspection

S7RW0A1406020

Timing Chain No.1 Guide

Check shoe (1) for wear or damage.

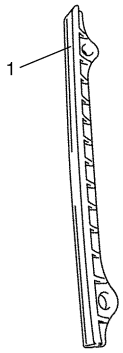

I2RH0B140068-01

Timing Chain Tensioner

Check shoe (1) for wear or damage.

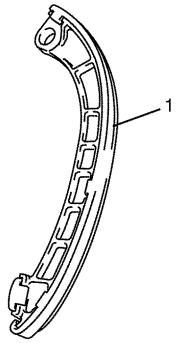

I2RH0B140069-01

Crankshaft Timing Sprocket

Check teeth of sprocket for wear or damage.

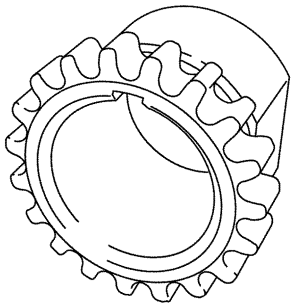

I2RH0B140070-01

Timing Chain

Check timing chain for wear or damage.

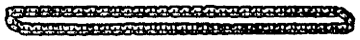

I2RH01140077-01

Timing Chain Tensioner Adjuster

Check that tooth surface (1) are free from damage.

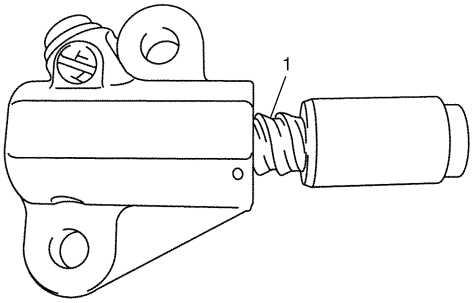

I2RH0B140071-01

Camshaft, Tappet and Shim Components

S7RW0A1406021

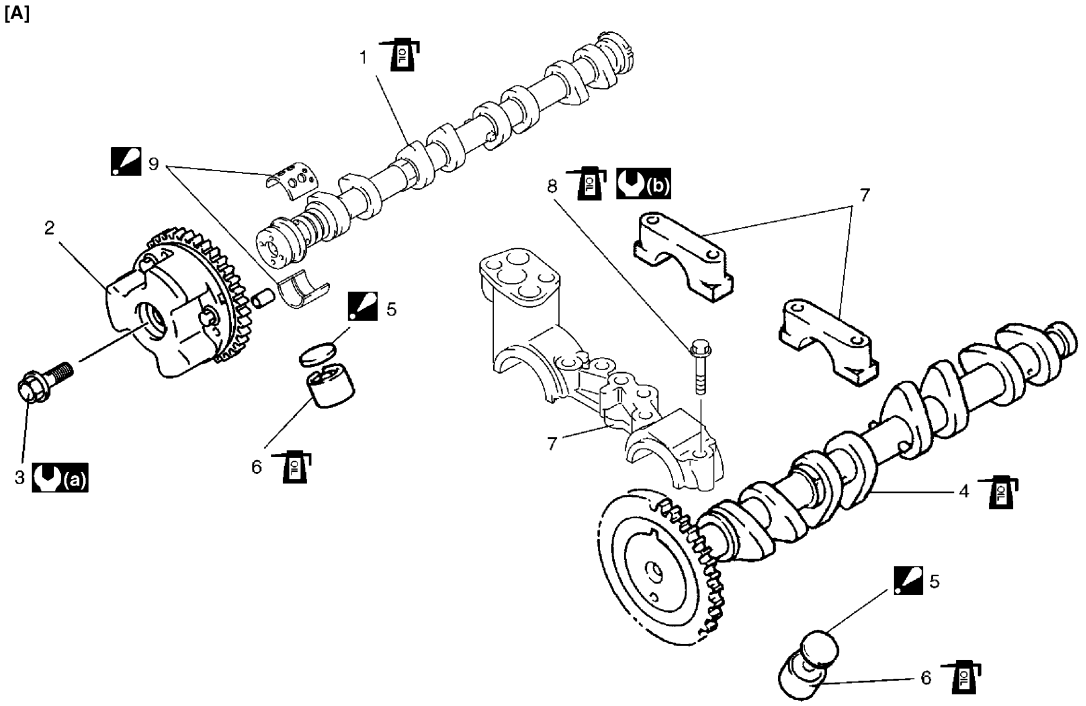

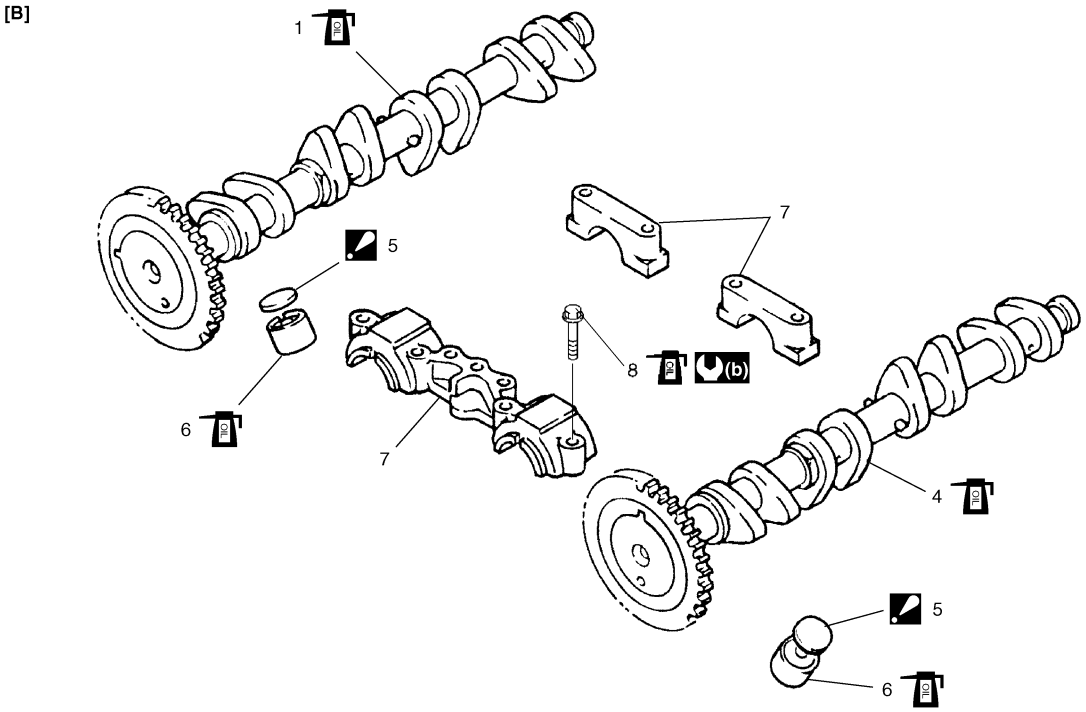

I4RS0B140014-03

[A]: For engine with VVT	4. Exhaust camshaft	9. Camshaft bearing : Install a bearing half with some holes to upper side of intake camshaft No.1 bearing.
[B]: For engine without VVT	5. Shim : Shim No. on it faces tappet side.	(a) : 60 N·m (6.0 kgf-m, 43.5 lb-ft)
1. Intake camshaft	6. Tappet	(b) : Tighten 11 N·m (1.1 kgf-m, 8.0 lb-ft) by the specified procedure
2. Intake camshaft sprocket assembly	7. Camshaft housing	: Apply engine oil to sliding surface of each part.
3. Intake camshaft sprocket bolt	8. Camshaft housing bolt	

Camshaft, Tappet and Shim Removal and Installation

S7RW0A1406022

⚠ CAUTION

- **Keep working table, tools and hands clean while overhauling.**
- **Use special care to handle aluminum parts so as not to damage them.**
- **Do not expose removed parts to dust. Keep them always clean.**

Removal

1) Remove timing chain cover referring to “Timing Chain Cover Removal and Installation”.
2) Remove timing chain referring to “Timing Chain and Chain Tensioner Removal and Installation”.
3) For engine with VVT, with hexagonal section (1) of intake camshaft (2) held stationary with spanner or the like, loosen mounting bolt of intake cam timing sprocket assembly (3) and remove it.

⚠ CAUTION

Never attempt to loosen mounting bolt with intake cam timing sprocket assembly held stationary. Failure to follow this could result in damage to lock pin.
Do not loosen bolt “a” because intake cam timing sprocket assembly is not serviceable.

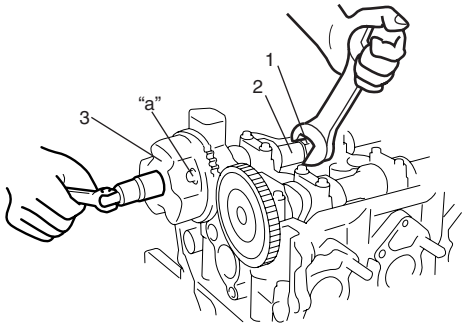

I3RM0A140030-01

4) Loosen camshaft housing bolts in such order as indicated in figure and remove them.

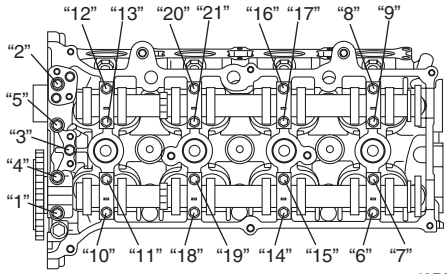

I3RM0A140031-01

5) Remove camshaft housings.
6) Remove intake and exhaust camshafts.
7) For engine with VVT, remove camshaft bearings (1).

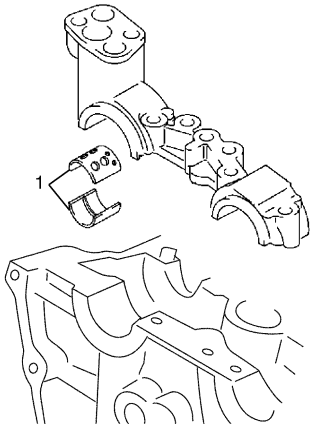

I5RW0C140023-01

8) Remove tappets (2) with shims (1).

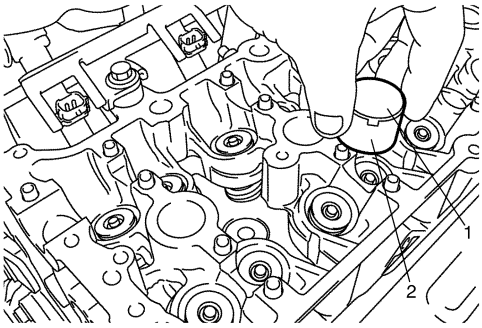

I2RH0B140074-01

Installation

1) Install tappets and shims to cylinder head.
   Apply engine oil around tappet and then install it to cylinder head.

NOTE

When installing shim, make sure to direct shim No. side toward tappet.

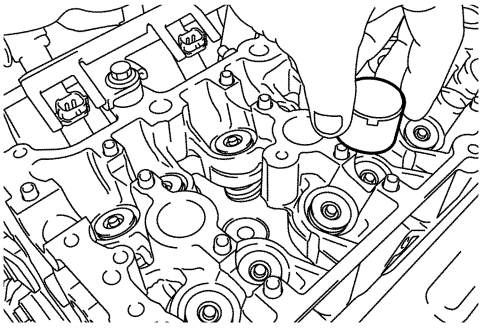

I2RH0B140075-01

2) For engine with VVT, install camshaft bearings (1) to cylinder head (2) and camshaft housing (3).

⚠ CAUTION

Do not apply engine oil to camshaft bearing back.
Only a upper half bearing of intake camshaft bearing No.1 has some holes.

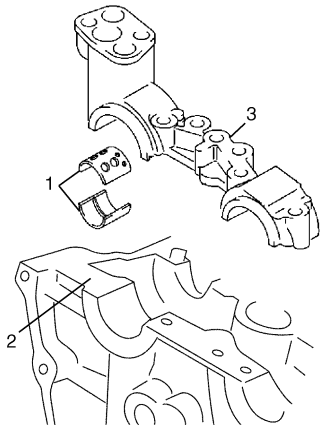

I5RW0C140024-01

3) Install intake camshaft (1) and exhaust camshaft (2). Align knock pin (3) and match mark (4) with notches (5) as shown in figure.

NOTE

Before installing camshafts, turn crankshaft until key position faces upward.
Refer to "Timing Chain and Chain Tensioner Removal and Installation".

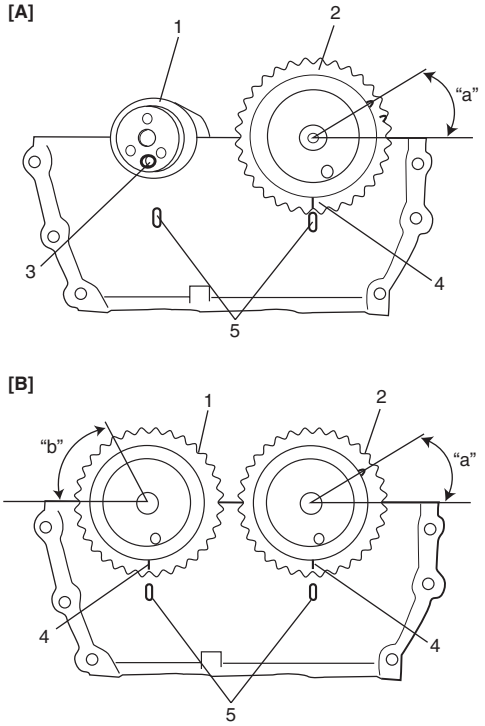

I4RS0B140015-01

[A]: For engine with VVT	"a": Approx. 30°
[B]: For engine without VVT	"b": Approx. 60°

4) Apply engine oil to sliding surface of each camshaft and camshaft journal then install them as shown in figure.
5) Install camshaft housing pins (1) as shown in figure.

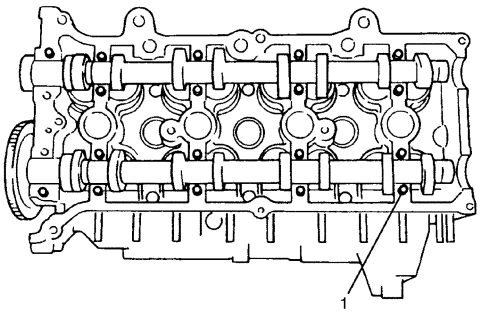

I3RM0A140033-01

6) Check position of camshaft housings.
   Embossed marks are provided on each camshaft housing, indicating position and direction for installation. Install housings as indicated by these marks.

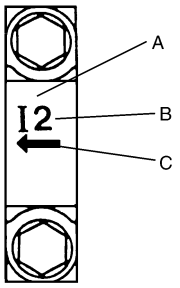

I2RH0B140078-01

A:	I: Intake side or E: Exhaust side
B:	Position from timing chain side
C:	Pointing to timing chain side

7) After applying engine oil to housing bolts, tighten them temporarily first. Tighten bolts evenly and gradually in numerical order (“1” through “21”) by repeating tightening sequence two or three times until specified torque is obtained.

   Tightening torque
   Camshaft housing bolt (a): Tighten 11 N·m (1.1 kgf-m, 8.0 lb-ft) by the specified procedure

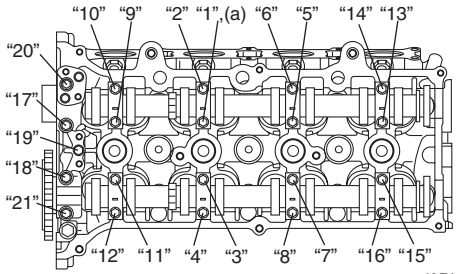

I3RH0B140041-01

8) For engine with VVT, with hexagonal section (1) of intake camshaft (2) held stationary with spanner or the like, tighten bolt of intake cam timing sprocket assembly (3) to specification.

   Tightening torque
   Intake cam timing sprocket bolt (a): 60 N·m (6.0 kgf-m, 43.5 lb-ft)

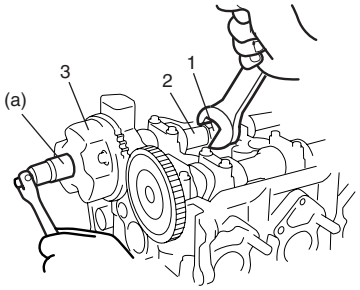

I3RH0B140042-01

9) Install timing chain with crankshaft sprocket referring to “Timing Chain and Chain Tensioner Removal and Installation”.
10) Install timing chain cover referring to “Timing Chain Cover Removal and Installation”.
11) Check valve lashes referring to “Valve Lash (Clearance) Inspection”.
12) Perform Steps 10) to 14) of “Installation” of “Timing Chain Cover Removal and Installation”.

Camshaft, Tappet and Shim Inspection

S7RW0A1406023

Intake Cam Timing Sprocket Assembly (For engine with VVT)

Fit intake cam timing sprocket assembly to camshaft (2) and hold hexagonal section of camshaft by using spanner or the like.
Check if sprocket (1) is not turned by hand.
If moved, replace intake cam timing sprocket assembly.

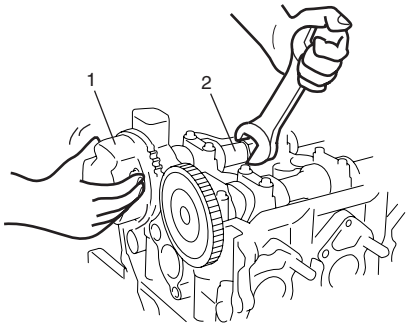

I3RH0B140043-01

Cam Wear

Using a micrometer, measure cam height “a”. If measured height underruns its limit, replace camshaft.

Cam height “a”
[For engine with VVT]

Cam height	Standard	Limit
Intake cam	44.929 – 45.089 mm (1.769 – 1.775 in.)	44.80 mm (1.764 in.)
Exhaust cam	44.399 – 44.559 mm (1.748 – 1.754 in.)	44.28 mm (1.743 in.)

[For engine without VVT]

Cam height	Standard	Limit
Intake cam	44.919 – 45.079 mm (1.768 – 1.775 in.)	44.80 mm (1.764 in.)
Exhaust cam	44.399 – 44.559 mm (1.748 – 1.754 in.)	44.28 mm (1.743 in.)

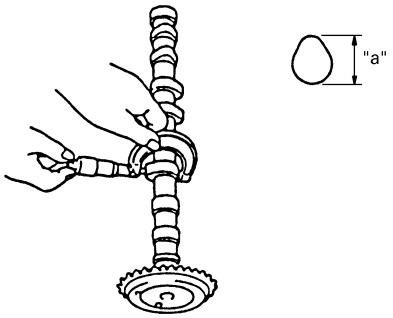

I2RH0B140080-01

Camshaft Runout

Set camshaft between two “V” blocks, and measure its runout by using a dial gauge.
If measured runout exceeds limit, replace camshaft.

Camshaft runout limit
0.10 mm (0.0039 in.)

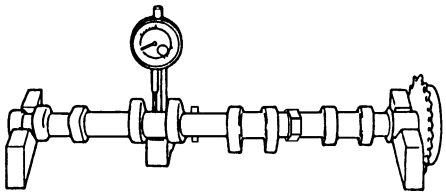

I2RH0B140081-01

Camshaft Journal Wear

Check camshaft journals and camshaft housings for pitting, scratches, wear or damage.
If any malcondition is found, replace camshaft or cylinder head with housing. Never replace cylinder head without replacing housings.

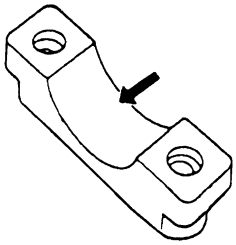

I2RH0B140082-01

Check clearance by using gauging plastic. Checking procedure is as follows.

1) Clean housings and camshaft journals.
2) Remove all tappets with shims.
3) Install camshafts to cylinder head.
4) Place a piece of gauging plastic to full width of journal of camshaft (parallel to camshaft).
5) Install camshaft housing.

6) Tighten camshaft housing bolts evenly and gradually in numerical order (“1” through “21”) by repeating tightening sequence two or three times until specified torque is obtained.

NOTE

Do not rotate camshaft while gauging plastic is installed.

Tightening torque
Camshaft housing bolt (a): 11 N·m (1.1 kgf-m, 8.0 lb-ft)

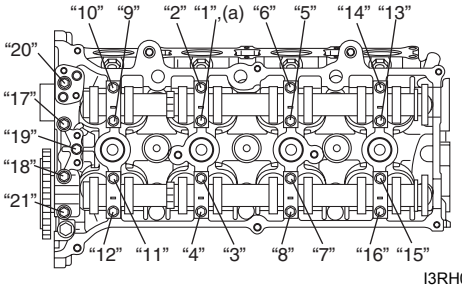

I3RH0B140041-01

7) Remove housing, and using scale (2) on gauging plastic envelop, measure gauging plastic (1) width at its widest point.

Camshaft journal clearance
[For engine with VVT system]

	Standard	Limit
Intake side No.1 housing	0.020 – 0.072 mm (0.0008 – 0.0028 in.)	0.10 mm (0.0039 in.)
Others	0.045 – 0.087 mm (0.0018 – 0.0034 in.)	0.12 mm (0.0047 in.)

[For engine without VVT system]

Standard	Limit
0.045 – 0.087 mm (0.0018 – 0.0034 in.)	0.12 mm (0.0047 in.)

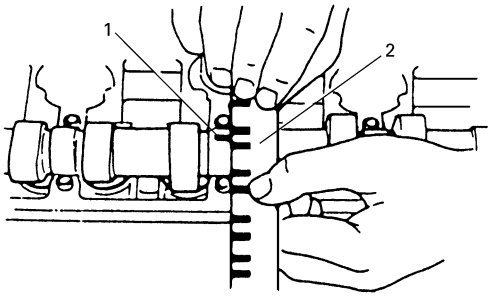

I2RH0B140083-01

If measured camshaft journal clearance exceeds limit, measure journal (housing) bore and outside diameter of camshaft journal. Replace camshaft or cylinder head assembly whichever the difference from specification is greater.

Camshaft journal diameter [A]
[For engine with VVT system]

Item	Standard
Intake side No.1 housing	26.940 – 26.955 mm (1.0606 – 1.0612 in.)
Exhaust side No.1 housing	26.934 – 26.955 mm (1.0604 – 1.0612 in.)
Others	22.934 – 22.955 mm (0.9029 – 0.9037 in.)

[For engine without VVT system]

Item	Standard
Intake and Exhaust side No.1 housing	26.934 – 26.955 mm (1.0604 – 1.0612 in.)
Others	22.934 – 22.955 mm (0.9029 – 0.9037 in.)

Camshaft journal bearing bore [B]
[For engine with VVT system]

Item	Standard
Intake side No.1 housing	30.000 – 30.015 mm (1.1811 – 1.1816 in.)
Exhaust side No.1 housing	27.000 – 27.021 mm (1.0630 – 1.0638 in.)
Others	23.000 – 23.021 mm (0.9055 – 0.9063 in.)

[For engine without VVT system]

Item	Standard
Intake and Exhaust side No.1 housing	27.000 – 27.021 mm (1.0630 – 1.0638 in.)
Others	23.000 – 23.021 mm (0.9055 – 0.9063 in.)

Camshaft bearing thickness (For engine with VVT)
: 1.5120 – 1.5180 mm (0.0596 – 0.0597 in.)

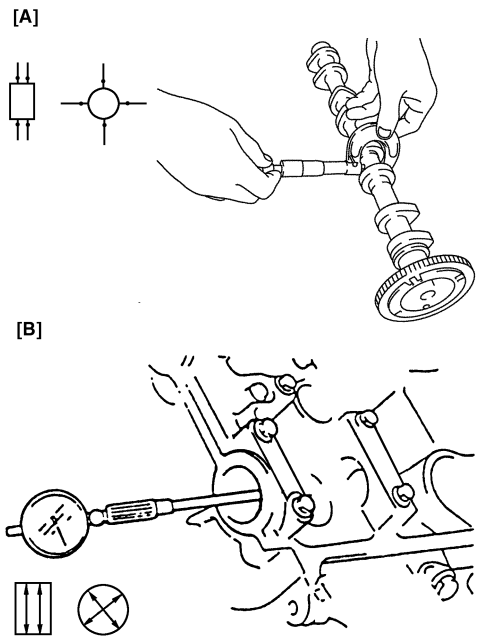

I2RH0B140084-01

Wear of Tappet and Shim
Check tappet and shim for pitting, scratches, or damage. If any malcondition is found, replace.

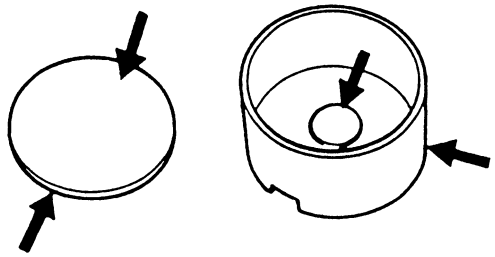

I2RH0B140085-01

Measure cylinder head bore and tappet outside diameter to determine cylinder head-to-tappet clearance. If clearance exceeds limit, replace tappet or cylinder head.

Cylinder head to tappet clearance
Standard: 0.025 – 0.066 mm (0.0010 – 0.025 in.)
Limit: 0.15 mm (0.0059 in.)

Tappet outside diameter [A]
Standard: 30.959 – 30.975 mm (1.2189 – 1.2195 in.)

Cylinder head tappet bore [B]
Standard: 31.000 – 31.025 mm (1.2205 – 1.2215 in.)

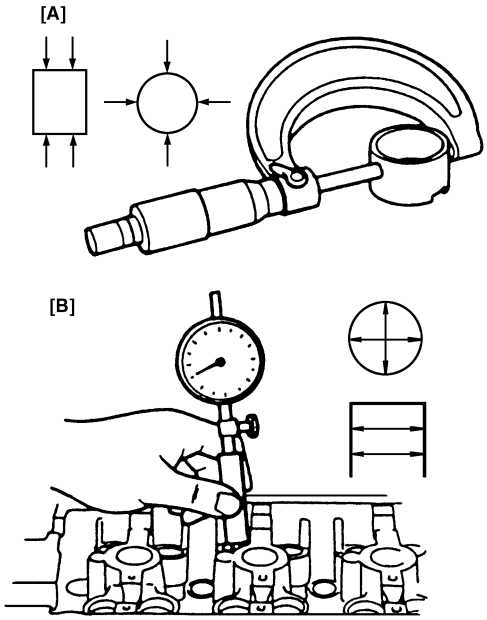

I2RH0B140086-01

Valves and Cylinder Head Components

S7RW0A1406024

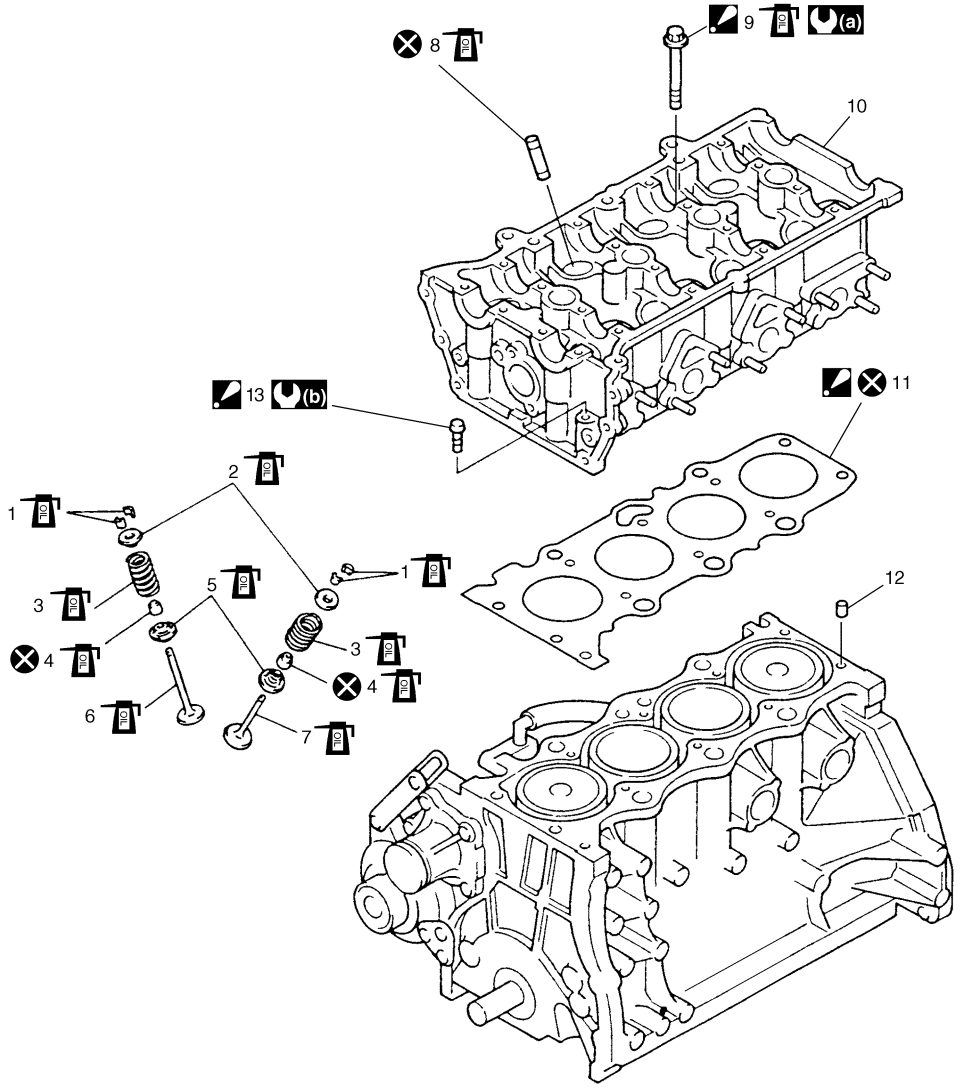

I4RS0A140015-01

1. Valve cotters	7. Exhaust valve	13. Cylinder head bolt (M8) : Be sure to tighten cylinder head bolt (M8) after securing the other cylinder head bolt (M10).
2. Valve spring retainer	8. Valve guide	(a) : Tighten 20 N·m (2.0 kgf-m, 14.5 lb-ft), 40 N·m (4.0 kgf-m, 29.0 lb-ft), 60° and 60° by the specified procedure.
3. Valve spring	9. Cylinder head bolt (M10) : Check cylinder head bolt (M10), plastic deformation tightening bolt, for deformation referring to “Valves and Cylinder Head Removal and Installation”, if it is reused.	(b) : Tighten 25 N·m (2.5 kgf-m, 18.0 lb-ft) by the specified procedure
4. Valve stem seal	10. Cylinder head	: Do not reuse.
5. Valve spring seat	11. Cylinder head gasket : “TOP” mark provided on gasket comes to crankshaft pulley side, facing up.	: Apply engine oil to sliding surface of each part.
6. Intake valve	12. Knock pin	

Valves and Cylinder Head Removal and Installation

S7RW0A1406025

Removal

1) Remove engine assembly from vehicle referring to “Engine Assembly Removal and Installation”.
2) Remove oil pan referring to “Oil Pan and Oil Pump Strainer Removal and Installation in Section 1E”.
3) Remove cylinder head cover referring to “Cylinder Head Cover Removal and Installation”.
4) Remove timing chain cover referring to Steps 2) to 11) of “Removal” in “Timing Chain Cover Removal and Installation”.
5) Remove timing chain referring to Steps 2) to 6) of “Removal” in “Timing Chain and Chain Tensioner Removal and Installation”.
6) Remove intake and exhaust camshafts referring to Steps 3) to 8) of “Removal” in “Camshaft, Tappet and Shim Removal and Installation”.
7) Loosen cylinder head bolts in such order as indicated in figure by using a 12 corner socket wrenches and remove them.

NOTE

Don’t forget to remove bolt (M8) (1) as shown in figure.

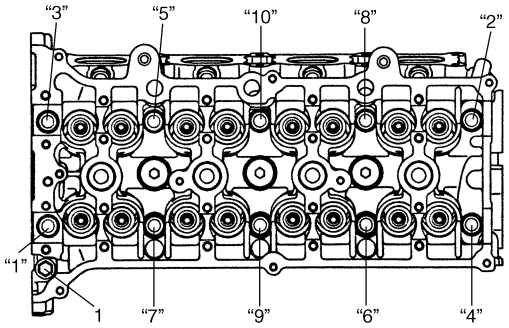

I2RH0B140088-01

8) Check all around cylinder head for any other parts required to be removed or disconnected and remove or disconnect whatever necessary.
9) Remove exhaust manifold, if necessary referring to “Exhaust Manifold Removal and Installation in Section 1K”.
10) Remove cylinder head with intake manifold and exhaust manifold. Use lifting device, if necessary.

Installation

1) Clean mating surface of cylinder head and cylinder block. Remove oil, old gasket and dust from mating surface.
2) Make sure that oil jet (venturi plug) (1) is not clogged. If it is not installed, install it as specified torque.

   Tightening torque
   Venturi plug (a): 5 N·m (0.5 kgf-m, 3.5 lb-ft)

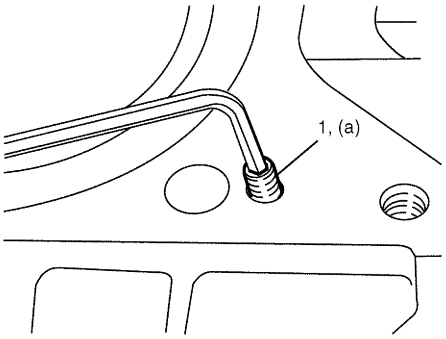

I2RH0B140089-01

3) Install knock pins (1) to cylinder block.
4) Install new cylinder head gasket (2) to cylinder block. “Top” or triangle mark provided on gasket comes to crankshaft pulley side, facing up (toward cylinder head side).

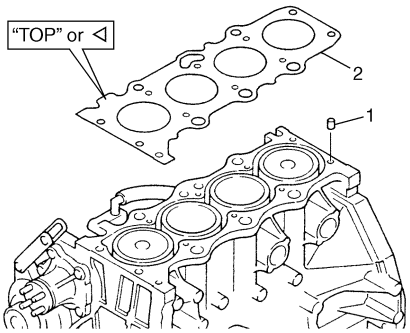

I5RW0C140025-01

5) Install cylinder head to cylinder block.
   Apply engine oil to new cylinder head bolts and tighten them gradually as follows.
   a) Tighten cylinder head bolts (“1” – “10”) to 20 N·m (2.0 kgf-m, 14.5 lb-ft) according to numerical order as shown by using a 12 corner socket wrenches.
   b) In the same manner as in Step a), tighten them to 40 N·m (4.0 kgf-m, 29.0 lb-ft).
   c) Turn all bolts 60° according to numerical order in figure.
   d) Repeat Step c).
   e) Tighten cylinder head bolt (M8) (1) to specified torque.

NOTE

Be sure to tighten M8 bolt (1) after securing the other bolts.

Tightening torque
Cylinder head bolt for M8 (a): Tighten 25 N·m (2.5 kgf-m, 18.0 lb-ft) by the specified procedure
Cylinder head bolt for M10 (b): Tighten 20 N·m (2.0 kgf-m, 14.5 lb-ft), 40 N·m (4.0 kgf-m, 29.0 lb-ft), 60° and 60° by the specified procedure

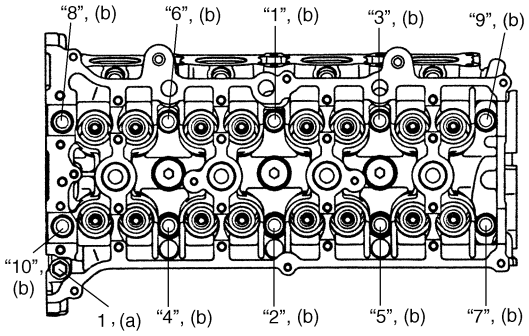

I5RW0C140030-01

NOTE

- **If cylinder head bolts (M10) are reused, check thread diameters of cylinder head bolt (1) for deformation according to the follows and replace them with new ones if thread diameter difference exceeds limit.**
- **Measure each thread diameter of cylinder head bolt (1) at “A” on 83.5 mm (2.81 in.) from seat side of flange bolt and “B” on 115 mm (4.53 in.) from seat side of flange bolt by using a micrometer (2).**
  Then calculate difference in diameters (“A” – “B”). If it exceeds limit, replace with new one.

Cylinder head bolt diameter measurement points
“a”: 83.5 mm (2.81 in.)
“b”: 115 mm (4.53 in.)

Cylinder head bolt diameter difference (deformation)
Limit (“A” – “B”): 0.1 mm (0.004 in.)

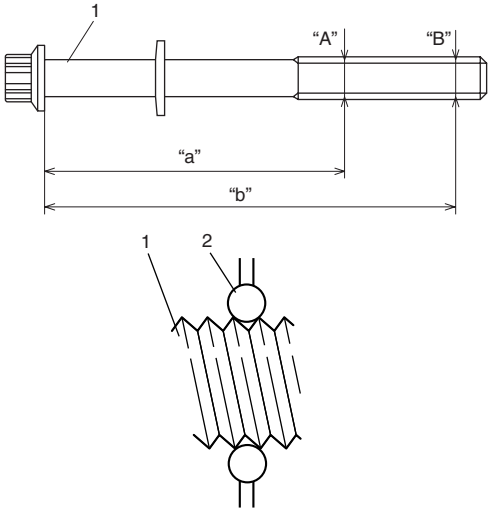

I2RH0B140092-01

6) Install camshafts, tappet and shim referring to “Camshaft, Tappet and Shim Removal and Installation”.
7) Install timing chain referring to “Timing Chain and Chain Tensioner Removal and Installation”.
8) Install timing chain cover referring to “Timing Chain Cover Removal and Installation”.
9) Install cylinder head cover referring to “Cylinder Head Cover Removal and Installation”.
10) Install oil pan referring to “Oil Pan and Oil Pump Strainer Removal and Installation in Section 1E”.

Valves and Cylinder Head Disassembly and Assembly

S7RW0A1406026

Disassembly

1) For ease in servicing cylinder head, remove intake manifold, injectors, exhaust manifold from cylinder head.
2) Using special tools (Valve lifter), compress valve spring and then remove valve cotters (1) also by using special tool (Forceps).

Special tool
(A): 09916–14510
(B): 09916–14521
(C): 09916–84511

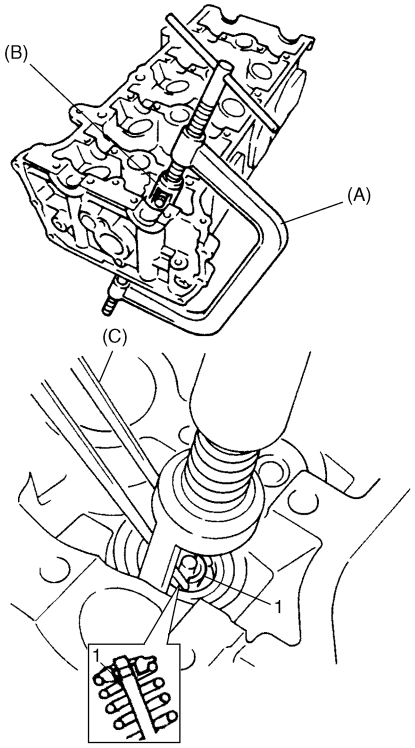

I2RH0B140093-01

3) Release special tools (Valve lifter), and remove spring retainer and valve spring.
4) Remove valve from combustion chamber side.
5) Remove valve stem seal (1) from valve guide and valve spring seat (2).

NOTE

Do not reuse valve stem seal once disassembled. Be sure to use new seal when assembling.

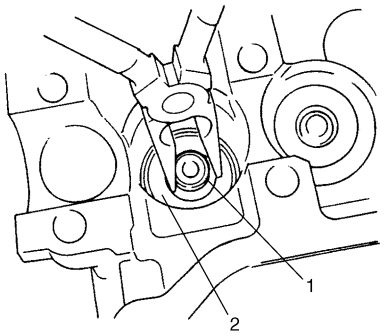

I2RH0B140094-01

6) Using special tool (Valve guide remover), drive valve guide out from combustion chamber side to valve spring side.

Special tool
(A): 09916–44910

NOTE

Do not reuse valve guide once disassembled. Be sure to use new valve guide (oversize) when assembling.

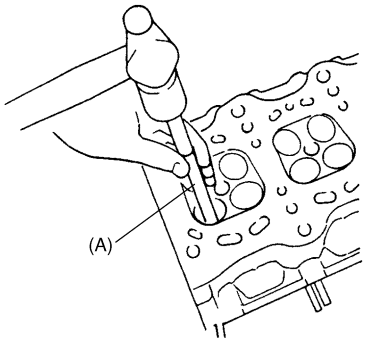

I2RH0B140095-01

7) Place disassembled parts except valve stem seal and valve guide in order so that they can be installed in their original position.

Assembly

1) Before installing valve guide into cylinder head, ream guide hole with special tool (10.5 mm reamer) so as to remove burrs and make it truly round.

Special tool
(A): 09916–34542
(B): 09916–37320

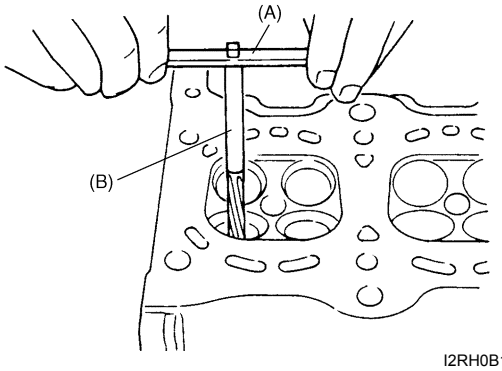

I2RH0B140096-01

2) Install valve guide to cylinder head.
Heat cylinder head uniformly at a temperature of 80 to 100 °C (176 to 212 °F) so that head will not be distorted, and drive new valve guide into hole with special tools.
Drive in new valve guide until special tool (Valve guide installer) contacts cylinder head.
After installing, make sure that valve guide protrudes by specified dimension “a” from cylinder head.

Special tool
(A): 09916–58210
(B): 09916–56011

NOTE

- **Never reuse valve guide once disassembled. Make sure to install new valve guide (Oversize).**
- **Intake and exhaust valve guides are identical.**

Valve guide protrusion (In and Ex)
“a”: 11.1 – 11.5 mm (0.437 – 0.452 in.)

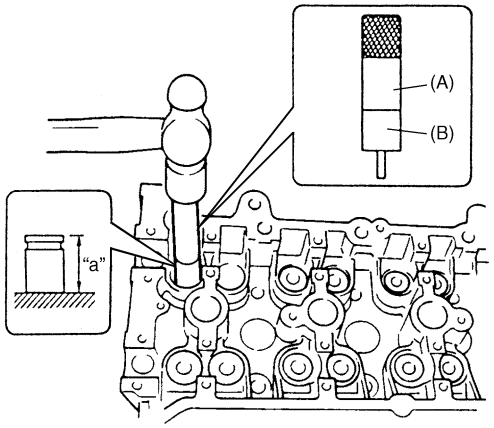

I2RH0B140097-01

3) Ream valve guide bore with special tool (5.5 mm reamer). After reaming, clean bore.

Special tool
(A): 09916–34542
(B): 09916–34550

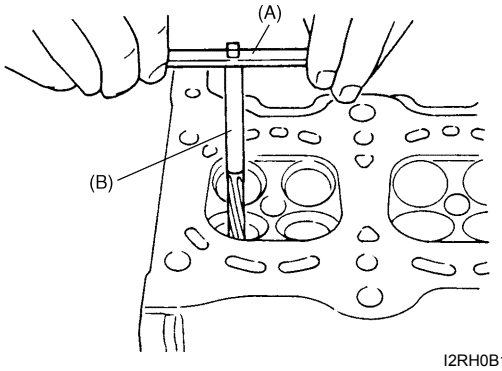

I2RH0B140096-01

4) Install valve spring seat to cylinder head.
5) Install new valve stem seal (1) to valve guide.
After applying engine oil to seal and spindle of special tool (Valve guide installer handle), fit oil seal to spindle, and then install seal to valve guide by pushing special tool by hand.
After installing, check to be sure that seal is properly fixed to valve guide.

Special tool
(A): 09917–98221
(B): 09916–58210

NOTE

- **Do not reuse seal once disassembled. Be sure to install new seal.**
- **When installing, never tap or hit special tool with a hammer or else. Install seal to guide only by pushing special tool by hand. Tapping or hitting special tool may cause damage to seal.**

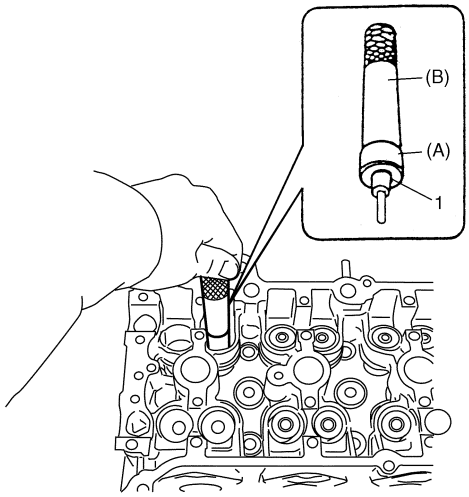

I2RH0B140098-01

6) Install valve to valve guide.
   Before installing valve to valve guide, apply engine oil to stem seal, valve guide bore and valve stem.

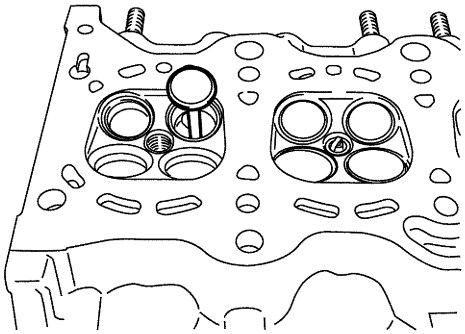

I2RH0B140099-01

7) Install valve spring and spring retainer.
   Each valve spring has top end (large-pitch end (1)) and bottom end (small-pitch end (2)). Be sure to position spring in place with its bottom end (small-pitch end) facing the bottom (valve spring seat side).

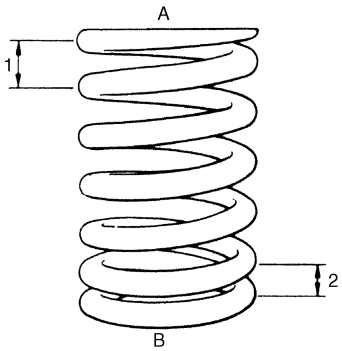

I2RH0B140100-01

A: Valve spring retainer side	B: Valve spring seat side

8) Using special tools (Valve lifter), compress valve spring and fit two valve cotters (1) into groove in valve stem.

NOTE

When compressing the valve spring, be carefully to free from damage in inside face of tappet installing hole.

Special tool
(A): 09916–14510
(B): 09916–14521
(C): 09916–84511

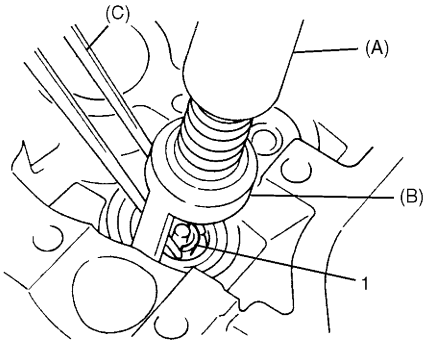

I2RH0B140101-01

9) Install intake manifold referring to “Intake Manifold Removal and Installation”.
10) Install fuel injectors referring to “Fuel Injector Removal and Installation in Section 1G”.
11) Install exhaust manifold referring to “Exhaust Manifold Removal and Installation in Section 1K”.

Valves and Valve Guides Inspection

S7RW0A1406027

Valve Guide

Valve stem-to-guide clearance

Using a micrometer and bore gauge, take diameter readings on valve stems and guides to check stem-to-guide clearance.
Be sure to take reading at more than one place along the length of each stem and guide.
If clearance exceeds limit, replace valve and valve guide.

Valve stem and valve guide specification

Item		Standard	Limit
Valve stem diameter [A]	In	5.465 – 5.480 mm (0.2150 – 0.2157 in.)	—
	Ex	5.440 – 5.455 mm (0.2142 – 0.2148 in.)	—
Valve guide bore [B]	In & Ex	5.500 – 5.512 mm (0.2165 – 0.2170 in.)	—
Stem-to-guide clearance	In	0.020 – 0.047 mm (0.0008 – 0.0018 in.)	0.070 mm (0.0028 in.)
	Ex	0.045 – 0.072 mm (0.0017 – 0.0028 in.)	0.090 mm (0.0035 in.)

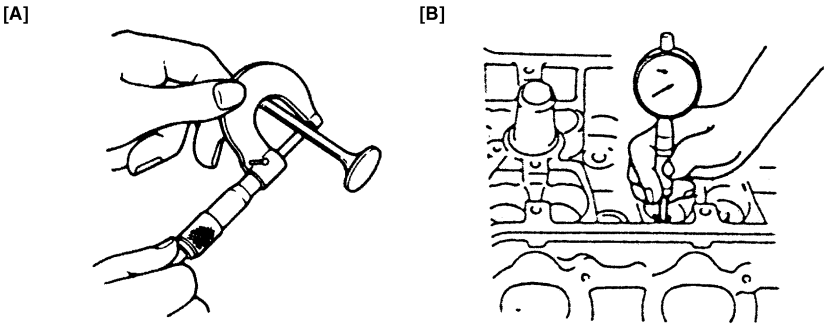

I4RS0B140016-01

Valve stem end deflection

If bore gauge is not available, check end deflection of valve stem with a dial gauge instead.
Move stem end in directions (1) and (2) to measure end deflection.
If deflection exceeds its limit, replace valve stem and valve guide.

Valve stem end deflection limit

In: 0.14 mm (0.005 in.)
Ex: 0.18 mm (0.007 in.)

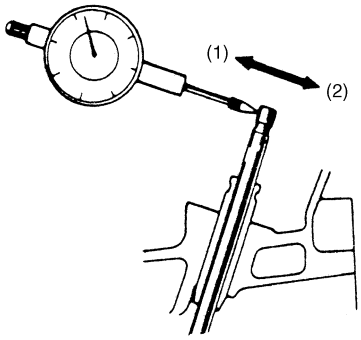

IYSQ01141096-01

Valve

Visual inspection

- Remove all carbon from valves.
- Inspect each valve for wear, burn or distortion at its face and stem end, as necessary, replace it.
- Inspect valve stem end face for pitting and wear. If pitting or wear is found there, valve stem end may be resurfaced, but not too much to grind off its chamber. When it is worn out too much that its chamber is gone, replace valve.

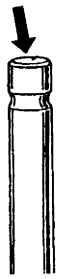

I2RH01140135-01

Valve head radial runout
Check each valve for radial runout with a dial gauge and "V" block. To check runout, rotate valve slowly. If runout exceeds its limit, replace valve.

Valve head radial runout
Limit: 0.08 mm (0.003 in.)

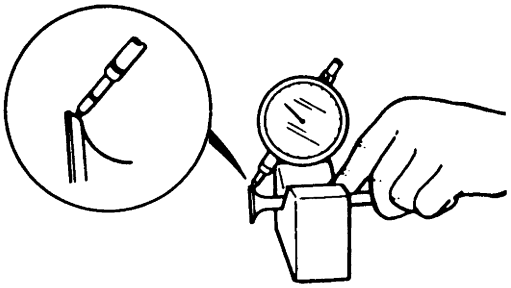

I2RH01140136-01

Seating contact width
Create contact pattern on each valve in the usual manner, i.e., by giving uniform coat of marking compound to valve seat and by rotatingly tapping seat with valve head. Valve lapper (tool used in valve lapping) must be used.
Pattern produced on seating face of valve must be a continuous ring without any break, and the width of pattern must be within specified range.

Standard seating width "a" revealed by contact pattern on valve face
Intake and Exhaust: 1.0 – 1.4 mm (0.0389 – 0.0551 in.)

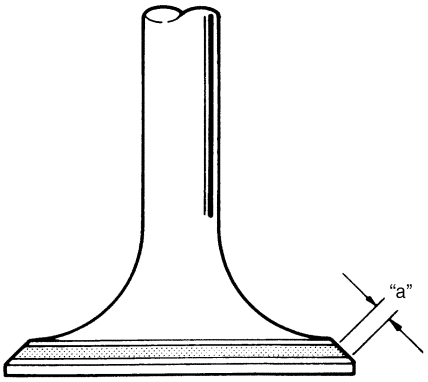

I2RH0B140103-01

Valve seat repair
A valve seat not producing a uniform contact with its valve or showing width of seating contact that is out of specified range must be repaired by regrinding or by cutting and regrinding and finished by lapping.

1) **Exhaust valve seat:**
   Use valve seat cutters (1) to make two cuts as illustrated in figure. Two cutters must be used: the first for making 22° angle, and the second for making 45° angle. The second cut must be made to produce desired seat width.

   Seat width for exhaust valve seat
   "a": 1.0 – 1.4 mm (0.0389 – 0.0551 in.)

2) **Intake valve seat:**
   Use valve seat cutters (1) to make three cuts as illustrated in figure. Three cutters must be used: the 1st for making 22° angle, the 2nd for making 60° angle, and 3rd for making 45° angle. The 3rd cut (45°) must be made to produce desired seat width.

   Seat width for intake valve seat
   "b": 1.0 – 1.4 mm (0.0389 – 0.0551 in.)

3) **Valve lapping:**
   Lap valve on seat in two steps, first with coarse size lapping compound applied to face and the second with fine-size compound, each time using valve lapper according to usual lapping method.

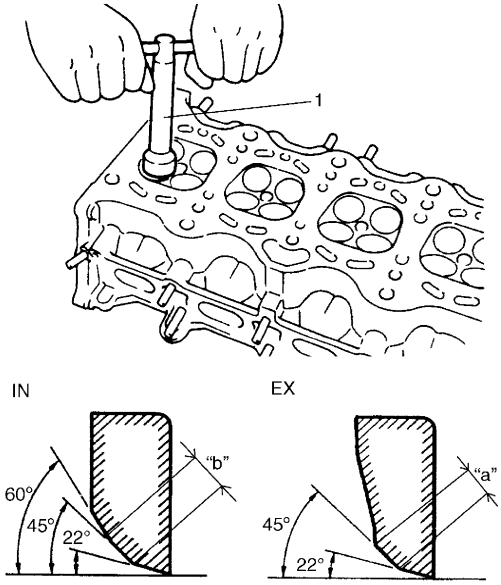

I5RW0A140024-01

Cylinder Head Inspection

S7RW0A1406028

- Remove all carbon deposits from combustion chambers.

NOTE

Do not use any sharp-edged tool to scrape off carbon deposits. Be careful not to scuff or nick metal surfaces when decarbonizing. The same applies to valves and valve seats, too.

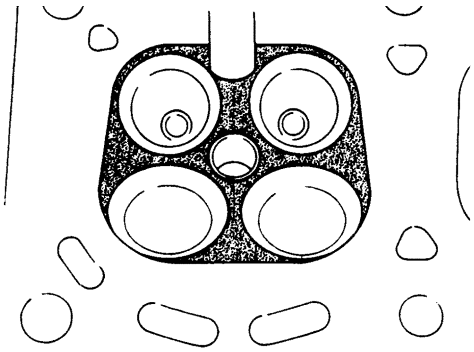

I2RH0B140105-01

- Check cylinder head for cracks on intake and exhaust ports, combustion chambers, and head surface. Using a straightedge and thickness gauge, check flatness of gasketed surface at a total of 6 locations. If distortion limit is exceeded, correct gasketed surface with a surface plate and abrasive paper of about #400 (Waterproof silicon carbide abrasive paper): place abrasive paper on and over surface plate, and rub gasketed surface against paper to grind off high spots. Should this fail to reduce thickness gauge readings to within limit, replace cylinder head.
  Leakage of combustion gases from this gasketed joint is often due to warped gasketed surface: such leakage results in reduced power output.

Distortion for cylinder head surface on piston side
Limit: 0.03 mm (0.001 in.)

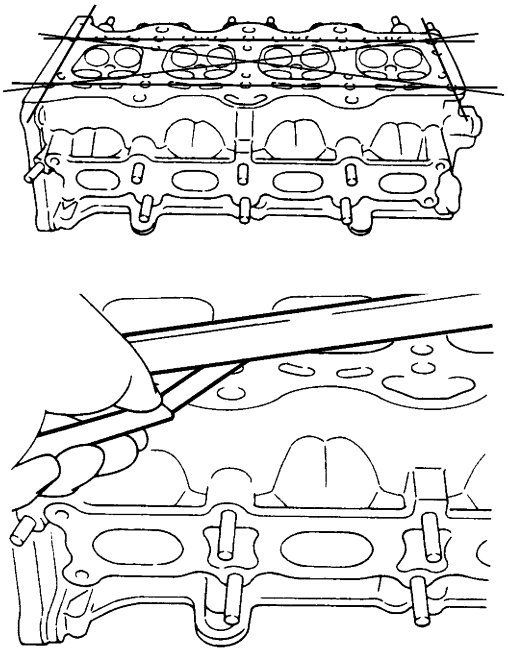

I2RH0B140106-01

- Distortion of manifold seating faces:
  Check seating faces of cylinder head for manifolds, using a straightedge and thickness gauge, in order to determine whether these faces should be corrected or cylinder head replaced.

Distortion for cylinder head surface on intake and exhaust manifold
Limit: 0.05 mm (0.002 in.)

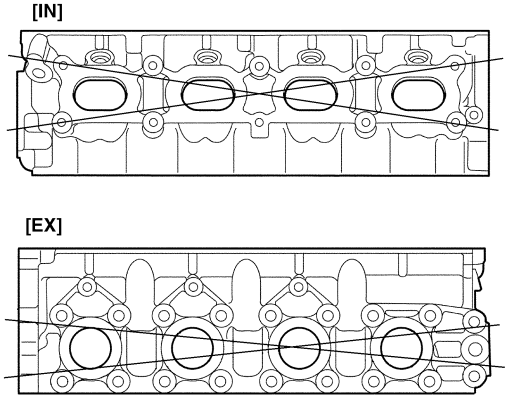

I2RH0B140107-01

Valve Spring Inspection

S7RW0A1406029

Valve Spring Free Length and Preload

Referring to data, check to be sure that each spring is in sound condition, free of any evidence of breakage or weakening. Remember, weakened valve springs can cause chatter, not to mention possibility of reducing power output due to gas leakage caused by decreased seating pressure.

Valve spring free length
Standard: 36.83 mm (1.450 in.)
Limit: 35.83 mm (1.411 in.)

Valve spring preload
Standard: 107 – 125 N (10.7 – 12.5 kgf) for 31.50 mm (23.6 – 27.6 lb/1.240 in.)
Limit: 102 N (10.2 kgf) for 31.50 mm (22.5 lb/1.240 in.)

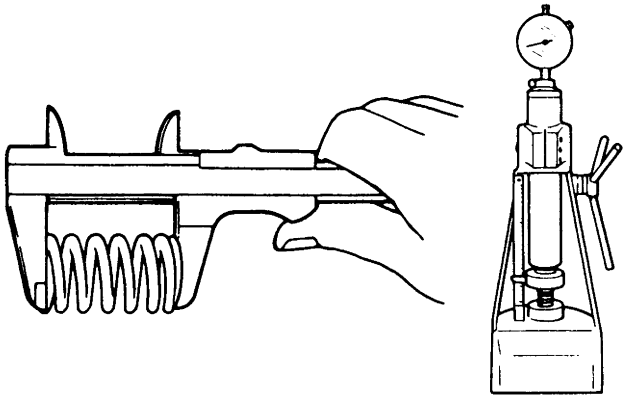

I2RH01140143-01

Spring Squareness

Use a square and surface plate to check each spring for squareness in terms of clearance between end of valve spring and square. Valve springs found to exhibit a larger clearance than limit must be replaced.

Valve spring squareness
Limit: 1.6 mm (0.063 in.)

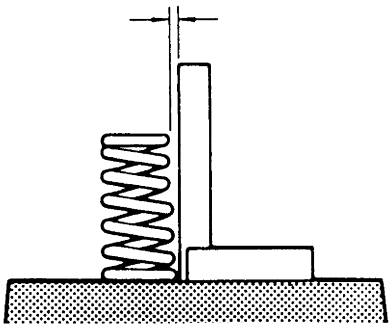

I2RH01140144-01

Pistons, Piston Rings, Connecting Rods and Cylinders Components

S7RW0A1406030

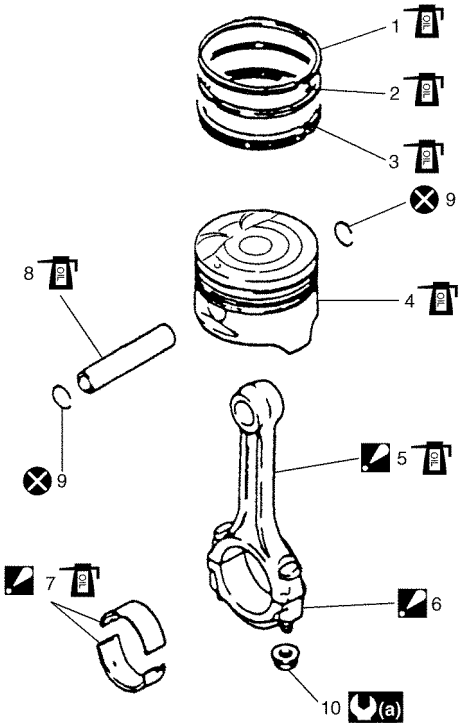

I5RW0C140045-01

1.	Top ring
2.	2nd ring
3.	Oil ring
4.	Piston
5.	Connecting rod : See “A”
6.	Connecting rod bearing cap : See “B”
7.	Connecting rod bearing : See “C”
8.	Piston pin
9.	Piston pin circlip
10.	Bearing cap nut
(a) :	Tighten 15 N·m (1.5 kgf-m, 11.0 lb-ft), 45° and 45° by the specified procedure.
:	Apply engine oil to sliding surface of each part.
:	Do not reuse.
“A”:	Apply engine oil to sliding surface except inner surface of big end, and rod bolts. Make sure rod bolt diameter when reuse it due to plastic deformation tightening. Refer to “Piston Pins and Connecting Rods Inspection”.
“B”:	Point arrow mark on cap to crankshaft pulley side.
“C”:	Do not apply oil between connecting rod and bearing or between bearing cap and bearing.

Pistons, Piston Rings, Connecting Rods and Cylinders Removal and Installation

S7RW0A1406031

Removal

1) Remove engine assembly from vehicle referring to “Engine Assembly Removal and Installation”.
2) Remove cylinder head referring to “Valves and Cylinder Head Removal and Installation”.
3) Mark cylinder number on all pistons, connecting rods and connecting rod caps using silver pencil or quick drying paint.
4) Remove rod bearing caps.
5) Install guide hose (1) over threads of rod bolts. This prevents damage to crank pin and rod bolt threads when removing connecting rod.

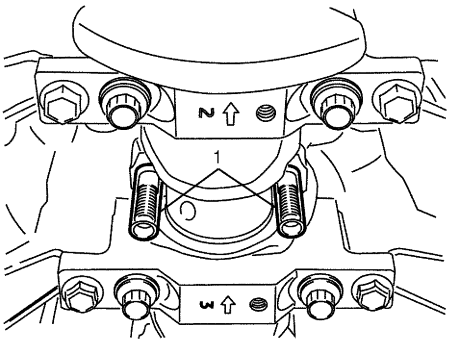

I2RH0B140109-01

6) Decarbonize top of cylinder bore before removing piston from cylinder.
7) Push piston and connecting rod assembly out through the top of cylinder bore.

Installation

1) Apply engine oil to pistons, rings, cylinder walls, connecting rod bearings and crank pins.

NOTE

Do not apply oil between connecting rod and bearing or between bearing cap and bearing.

2) Install guide hoses (1) over connecting rod bolts. These guide hoses protect crank pin and threads of rod bolt from damage during installation of connecting rod and piston assembly.

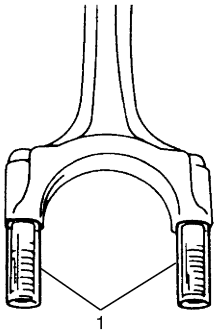

I2RH01140147-01

3) When installing piston and connecting rod assembly into cylinder bore, point front mark (1) on piston head to crankshaft pulley side.

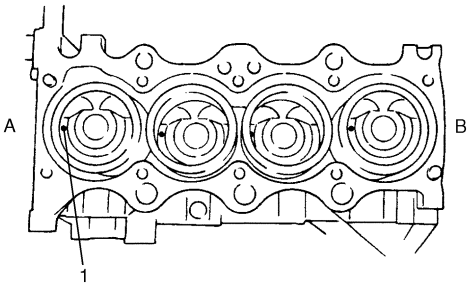

I2RH0B140110-01

A: Crankshaft pulley side	B: Flywheel side

4) Install piston and connecting rod assembly into cylinder bore. Use special tool (Piston ring compressor) to compress rings. Guide connecting rod into place on crankshaft.
Using a hammer handle, tap piston head to install piston into bore. Hold ring compressor firmly against cylinder block until all piston rings have entered cylinder bore.

Special tool
(A): 09916–77310

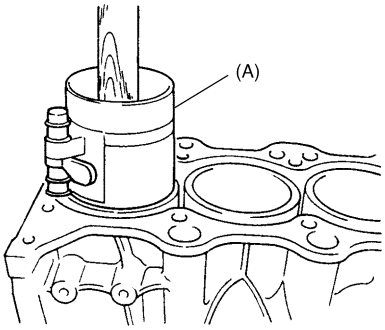

I2RH0B140111-01

5) Install bearing cap (1):
   Point arrow mark (2) on cap to crankshaft pulley side.
   After applying engine oil to rod bolts and tighten cap nuts (3) gradually as follows.
   a) Tighten all cap nuts to 15 N·m (1.5 kgf-m, 11.0 lb-ft).
   b) Retighten them to 45°.
   c) Repeat Step b) once again.

NOTE

Before installing bearing cap, make sure that checking for connecting rod bolt deformation. Refer to "Piston Pins and Connecting Rods Inspection".

Tightening torque
Connecting rod bearing cap nut (a): Tighten 15 N·m (1.5 kgf-m, 11.0 lb-ft), 45° and 45° by the specified procedure

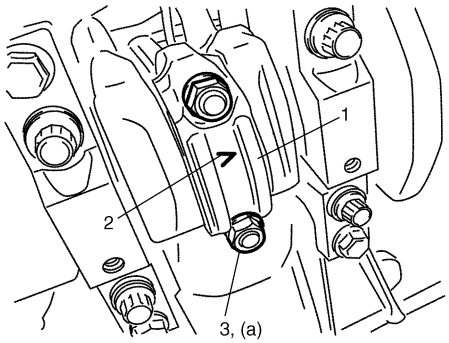

I2RH0B140112-01

6) Install cylinder head referring to "Valves and Cylinder Head Removal and Installation".

Pistons, Piston Rings, Connecting Rods and Cylinders Disassembly and Assembly

S7RW0A1406032

Disassembly

1) Using piston ring expander, remove two compression rings (Top and 2nd) and oil ring from piston.
2) Remove piston pin from connecting rod as follows.
   a) Ease out piston pin circlips (1), as shown.

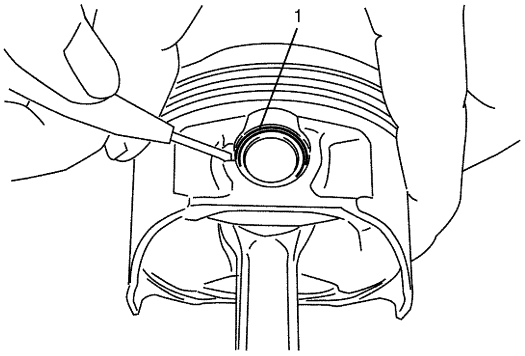

I2RH0B140113-01

   b) Force piston pin out.

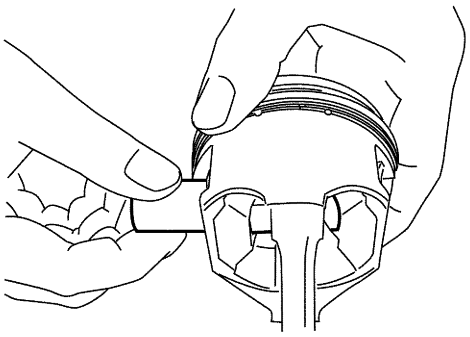

I2RH0B140114-01

Assembly

1) Decarbonize piston head and ring grooves using a suitable tool.
2) Install piston pin to piston (1) and connecting rod (2):
   a) After applying engine oil to piston pin and piston pin holes in piston and connecting rod.
   b) Installing connecting rod to piston.

NOTE

Be sure to position front mark (4) on piston and oil hall (5) of connecting rod at specified position as shown in figure.

   c) Insert piston pin to piston and connecting rod.
   d) Install piston pin circlips (3).

NOTE

Circlip should be installed with its cut part facing as shown in figure. Install so that circlip end gap comes within such range as indicated by arrow.

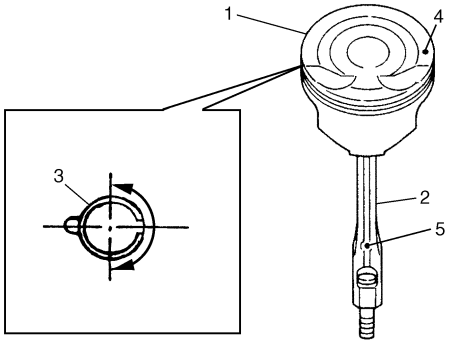

I5RW0C140026-01

3) Install piston rings to piston:
   - As indicated in figure, 1st and 2nd rings have “T” mark (4) respectively. When installing these piston rings to piston, direct marked side of each ring toward top of piston.
   - 1st ring (1) differs from 2nd ring (2) in thickness, shape and color of surface contacting cylinder wall.
     Distinguish 1st ring from 2nd ring by referring to the figure.
   - When installing oil ring (3), install spacer first and then two rails.

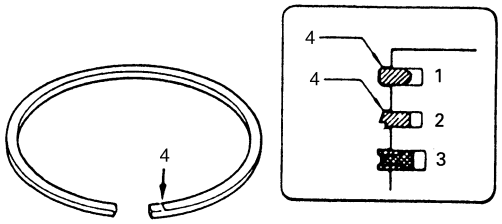

I6RW0B140011-01

4) After installing three rings (1st, 2nd and oil rings), distribute their end gaps as shown in figure.

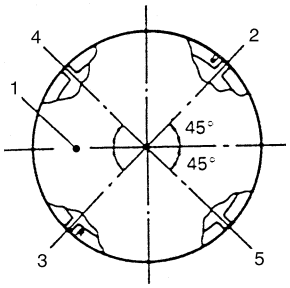

I5RW0C140046-01

1. Front mark	4. Oil ring upper rail gap
2. 1st ring end gap	5. Oil ring lower rail gap
3. 2nd ring end gap and oil ring spacer gap	

Cylinders, Pistons and Piston Rings Inspection

S7RW0A1406033

Cylinder

Visual inspection

Inspect cylinder walls for scratches, roughness or ridges which indicate excessive wear. If cylinder bore is very rough or deeply scratched, or ridged, rebore cylinder and use over size piston.

Cylinder bore diameter, taper and out-of-round

Using a cylinder gauge (1), measure cylinder bore in thrust and axial directions at two positions (“a” and “b”) as shown in figure.
If any of the following conditions is noted, rebore cylinder.

1) Cylinder bore dia. exceeds limit.
2) Difference of measurements at two positions exceeds taper limit.
3) Difference between thrust and axial measurements exceeds out-of-round limit.

<u>Cylinder bore diameter</u>
Standard: 78.000 – 78.014 mm (3.0709 – 3.0714 in.)
Limit: 78.050 mm (3.073 in.)

<u>Cylinder taper and out-of-round</u>
Limit: 0.10 mm (0.004 in.)

NOTE

If any one of four cylinders has to be rebored, rebore all four to the same next oversize. This is necessary for the sake of uniformity and balance.

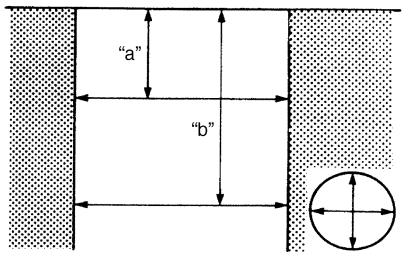

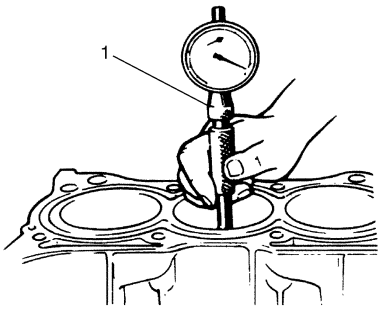

I2RH0B140117-01

“a”: 50 mm (1.96 in.)
“b”: 100 mm (3.94 in.)

Piston

Visual inspection

Inspect piston for faults, cracks or other damages. Damaged or faulty piston should be replaced.

Piston diameter

As indicated in figure, piston diameter should be measured at a position 19.5 mm (0.77 in.) ("a") from piston skirt end in the direction perpendicular to piston pin.

Piston diameter specification

Standard size (used piston): 77.953 – 77.968 mm (3.0690 – 3.0696 in.)
Standard size (new piston with coating): 77.963 – 77.990 mm (3.0694 – 3.0704 in.)
Oversize (0.50 mm (0.0196 in.)) (used piston): 78.453 – 78.468 mm (3.0887 – 3.0893 in.)
Oversize (0.50 mm (0.0196 in)) (new piston with coating): 78.463 – 78.490 mm (3.0891 – 3.0901 in.)

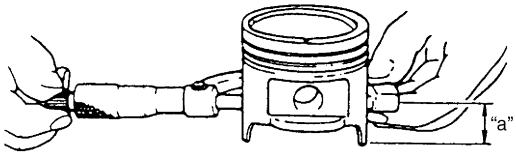

I2RH01140157-01

Piston clearance

Measure cylinder bore diameter and piston diameter to find their difference which is piston clearance. Piston clearance should be within specification as follows. If it is out of specification, rebore cylinder and use oversize piston.

NOTE

Cylinder bore diameters used here are measured in thrust direction at two positions.

Piston clearance

Standard (used piston): 0.032 – 0.061 mm (0.0013 – 0.0024 in.)
Standard (new piston with coating): 0.010 – 0.051 mm (0.0004 – 0.0020 in.)
Limit: 0.161 mm (0.0065 in.)

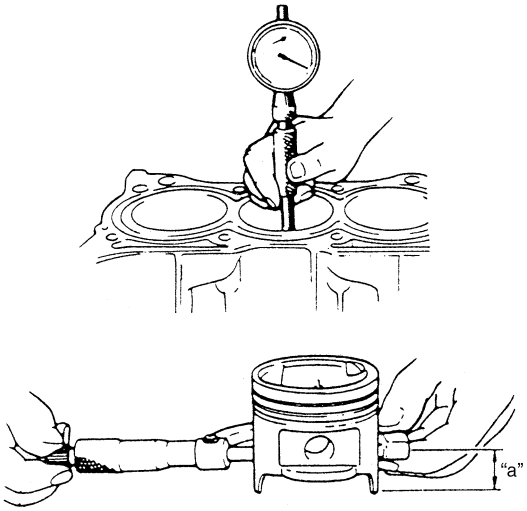

I4RS0A140022-01

"a": 19.5 mm (0.77 in.)

Ring groove clearance

Before checking, piston grooves must be clean, dry and free of carbon deposits.
Fit new piston ring (1) into piston groove, and measure clearance between ring and ring land by using thickness gauge (2). If clearance is out of specification, replace piston.

Ring groove clearance

	Standard	Limit
Top ring	**0.03 – 0.07 mm (0.0012 – 0.0028 in.)**	**0.12 mm (0.0047 in.)**
2nd ring	**0.02 – 0.06 mm (0.0008 – 0.0024 in.)**	**0.10 mm (0.0039 in.)**
Oil ring	**0.03 – 0.17 mm (0.0012 – 0.0067 in.)**	**—**

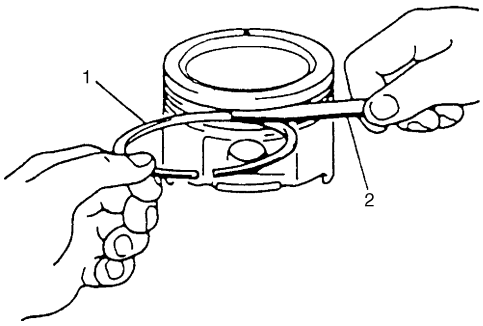

I2RH01140159-01

Piston Ring

Piston ring end gap

To measure end gap, insert piston ring (2) into cylinder bore and then measure the gap by using thickness gauge (1).
If measured gap exceeds limit, replace ring.

NOTE

Decarbonize and clean top of cylinder bore before inserting piston ring.

Piston ring end gap

Item	Standard	Limit
Top ring	0.20 – 0.35 mm (0.0079 – 0.0138 in.)	0.7 mm (0.0276 in.)
2nd ring	0.35 – 0.50 mm (0.0138 – 0.0197 in.)	1.0 mm (0.0394 in.)
Oil ring	0.20 – 0.70 mm (0.0079 – 0.0276 in.)	1.2 mm (0.0472 in.)

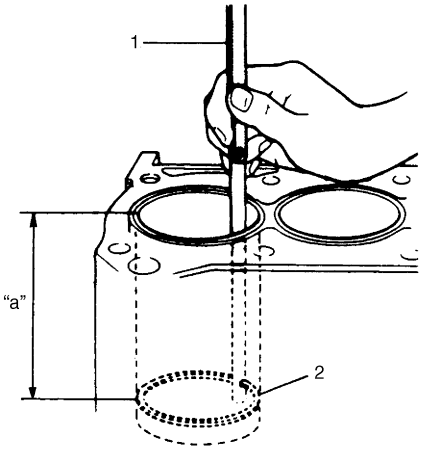

I2RH01140161-01

"a": 120 mm (4.72 in.)

Piston Pins and Connecting Rods Inspection

S7RW0A1406034

Piston Pin

Visual inspection

Check piston pin, connecting rod small end bore and piston bore for wear or damage, paying particular attention to condition of small end bore bush. If pin, connecting rod small end bore or piston bore is badly worn or damaged, replace pin, connecting rod and/or piston.

Piston pin clearance

Check piston pin clearance in small end and piston. Replace connecting rod and/or piston if its small end is badly worn or damaged or if measured clearance exceeds limit.

Piston pin clearance in connecting rod small end
Standard: 0.003 – 0.014 mm (0.0001 – 0.0006 in.)
Limit: 0.05 mm (0.00020 in.)

Piston pin clearance in piston
Standard: 0.006 – 0.017 mm (0.00024 – 0.00067 in.)
Limit: 0.05 mm (0.0020 in.)

Small-end bore
20.003 – 20.011 mm (0.7875 – 0.7878 in.)

Piston pin dia.
19.997 – 20.000 mm (0.7873 – 0.7874 in.)

Piston bore
20.006 – 20.014 mm (0.7876 – 0.7880 in.)

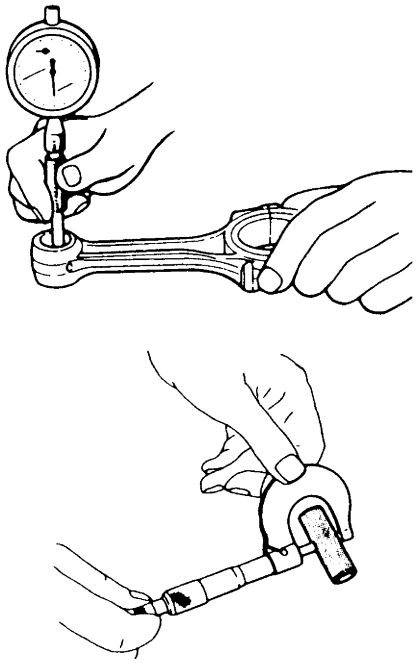

I4RS0A140023-01

Connecting Rod

Big-end side clearance

Check big-end of connecting rod for side clearance, with rod fitted and connected to its crank pin in the normal manner. If measured clearance is found to exceed its limit, replace connecting rod.

Big-end side clearance

Standard: 0.25 – 0.40 mm (0.0098 – 0.0157 in.)
Limit: 0.55 mm (0.0217 in.)

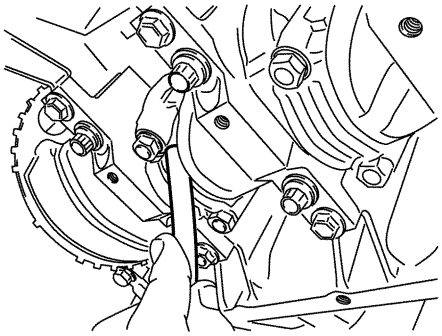

I2RH0B140148-01

Connecting rod alignment

Mount connecting rod on aligner to check it for bow and twist. If measured value exceeds the limit, replace it.

Connecting rod alignment

Limit on bow: 0.05 mm (0.0020 in.)
Limit on twist: 0.10 mm (0.0039 in.)

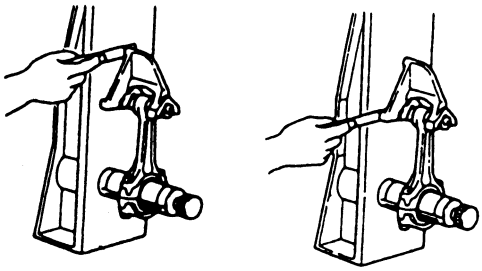

I4RH01140053-01

Connecting rod bolt deformation (Plastic deformation tightening bolt)

Measure each thread diameter of connecting rod bolt (2) at “A” on 32 mm (1.25 in.) from bolt mounting surface and “B” on 40 mm (1.57 in.) from bolt mounting surface by using a micrometer (3).
Calculate difference in diameters (“A” – “B”). If it is exceeds limit, replace connected rod (1).

Connecting rod bolt measurement points

“a”: 32 mm (1.25 in.)
“b”: 40 mm (1.57 in.)

Connecting rod bolt diameter difference

Limit (“A” – “B”): 0.1 mm (0.004 in.)

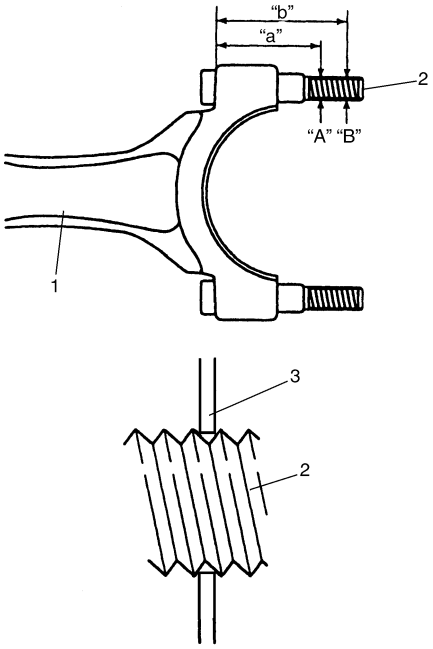

I2RH0B140119-01

Crank Pin and Connecting Rod Bearings Inspection

S7RW0A1406035

Crank Pin Diameter

Inspect crank pin for uneven wear or damage. Measure crank pin for out-of-round or taper with a micrometer. If crank pin is damaged or out-of round or taper is out of limit, replace crankshaft or regrind crank pin to undersize and use undersize bearing.

Crank pin diameter

Connecting rod bearing size	Crank pin diameter
Standard	41.982 – 42.000 mm (1.6528 – 1.6535 in.)
0.25 mm (0.0098 in.) undersize	41.732 – 41.750 mm (1.6430 – 1.6437 in.)

Out-of-round
A – B

Taper
a – b

Crank pin taper and out-of-round
Limit: 0.01 mm (0.0004 in.)

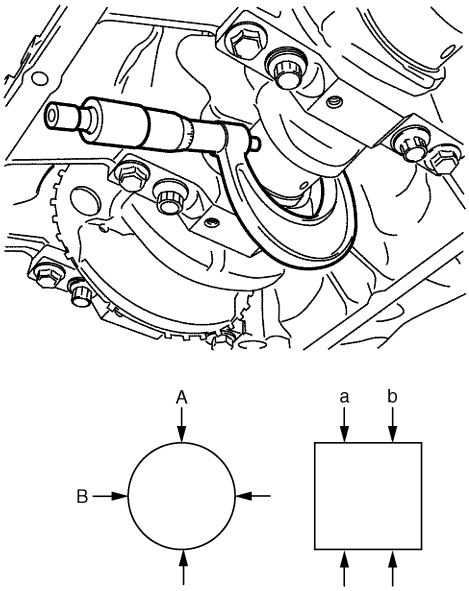

I2RH0B140120-01

Connecting Rod Bearing General Information

Service connecting rod bearings are available in standard size and 0.25 mm (0.0098 in.) undersize bearing, and standard size bearing has 5 kinds of bearings differing in tolerance.
For identification of undersize bearing, it is painted red at the position as indicated in figure, undersize bearing thickness is 1.605 – 1.615 mm (0.0632 – 0.0635 in.) at the center of it.

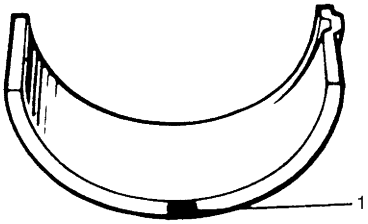

I2RH01140164-01

1. Red paint

Connecting Rod Bearing Visual Inspection

Inspect bearing shells for signs of fusion, pitting, burn or flaking and observe contact pattern. Bearing shells found in defective condition must be replaced.

Connecting Rod Bearing Clearance

1) Before checking bearing clearance, clean bearing and crank pin.
2) Install bearing in connecting rod and bearing cap.
3) Place a piece of gauging plastic (1) to full width of crank pin as contacted by bearing (parallel to crankshaft), avoiding oil hole.

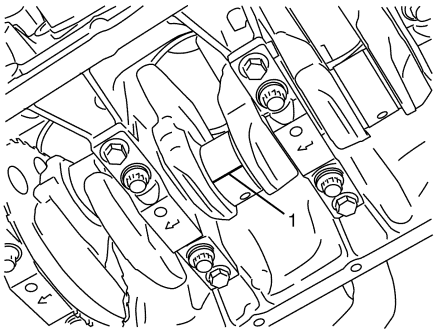

I2RH0B140121-01

4) Install rod bearing cap (1) to connecting rod.
When installing cap, be sure to point arrow mark (2) on cap to crankshaft pulley side, as shown in figure.
After applying engine oil to rod bolts, tighten cap nuts (3) gradually as follows.
   a) Tighten all cap nuts to 15 N·m (1.5 kgf-m, 11.0 lb-ft)
   b) Retighten them to 45°
   c) Repeat Step b) once again.

   Tightening torque
   Connecting rod bearing cap nut (a): Tighten 15 N·m (1.5 kgf-m, 11.0 lb-ft) 45° and 45° by the specified procedure

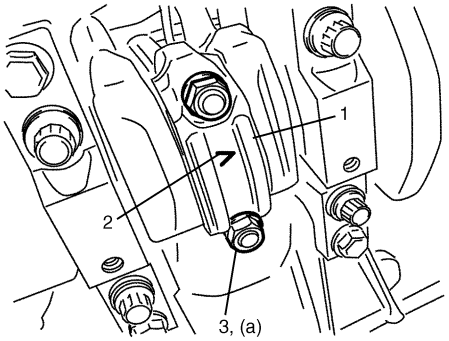

I2RH0B140122-01

5) Remove cap and using a scale (1) on gauging plastic envelope (2), measure gauging plastic (2) width at the widest point (clearance).
If clearance exceed its limit, use a new standard size bearing referring to “Selection of Connecting Rod Bearings: ”.
After selecting new bearing, recheck clearance.

   Connecting rod bearing clearance
   Standard: 0.029 – 0.047 mm (0.0011 – 0.0018 in.)
   Limit: 0.065 mm (0.0026 in.)

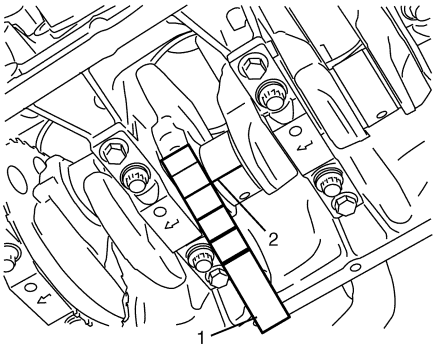

I2RH0B140123-01

6) If clearance can not be brought to its limit even by using a new standard size bearing, use next thicker bearing and recheck clearance or regrind crank pin to undersize and use 0.25 mm undersize bearing.

Selection of Connecting Rod Bearings

NOTE

- **If bearing is in malcondition, or bearing clearance is out of specification, select a new standard bearing according to the following procedure and install it.**
- **When replacing crankshaft or connecting rod and its bearing due to any reason, select new standard bearings to be installed by referring to numbers stamped on connecting rod and its cap and/or alphabets stamped on crank web of No.3 cylinder.**

1) Check stamped numbers on connecting rod and its cap as shown.
Three kinds of numbers (“1”, “2” and “3”) represent the following connecting rod big end inside diameters.
For example, stamped number “1” indicates that corresponding connecting rod big end inside diameter is 45.000 – 45.006 mm (1.7717 – 1.7718 in.).

Connecting rod big end inside diameter

Stamped numbers	Connecting rod big end inside diameter
1	45.0000 – 45.0060 mm (1.7717 – 1.7718 in.)
2	45.0061 – 45.0120 mm (1.7719 – 1.7721 in.)
3	45.0121 – 45.0180 mm (1.7722 – 1.7723 in.)

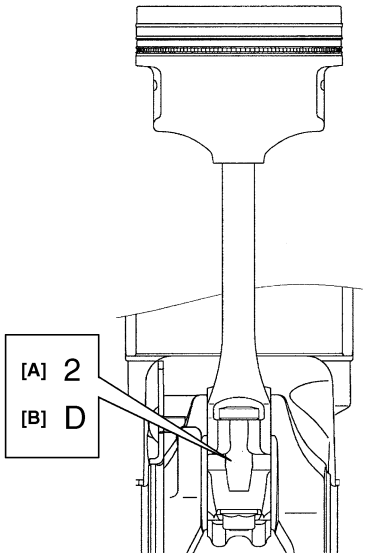

I3RH0A140017-01

[A]:	Connecting rod big end inside diameter number
[B]:	Weight indication mark

2) Next, check crankshaft pin diameter. On crank web No.3, four alphabets are stamped as shown in figure. Three kinds of alphabet (“A”, “B” and “C”) represent the following crankshaft pin diameter respectively. For example, stamped “A” indicates that corresponding crankshaft pin diameter is 41.994 – 42.000 mm (1.6533 – 1.6534 in.).

Crankshaft pin outer diameter

Stamped alphabet	Crankshaft pin diameter
A	41.9940 – 42.0000 mm (1.6533 – 1.6534 in.)
B	41.9880 – 41.9939 mm (1.6531 – 1.6532 in.)
C	41.9820 – 41.9879 mm (1.6529 – 1.6530 in.)

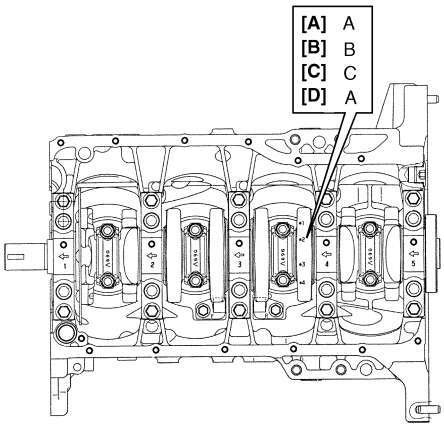

I3RH0A140018-01

[A]:	Crankshaft pin diameter for No.1 cylinder
[B]:	Crankshaft pin diameter for No.2 cylinder
[C]:	Crankshaft pin diameter for No.3 cylinder
[D]:	Crankshaft pin diameter for No.4 cylinder

3) There are five kinds of standard bearings differing in thickness. To distinguish them, they are painted in the following colors at the position as indicated in figure.
Each color indicated the following thickness at the center of bearing.

Standard size of connecting rod bearing thickness

Color painted	Bearing thickness
Blue	1.4991 – 1.5020 mm (0.05902 – 0.05913 in.)
Yellow	1.4961 – 1.4990 mm (0.05890 – 0.05901 in.)
Nothing	1.4931 – 1.4960 mm (0.05878 – 0.05889 in.)
Black	1.4901 – 1.4930 mm (0.05867 – 0.05877 in.)
Green	1.4870 – 1.4900 mm (0.05855 – 0.05866 in.)

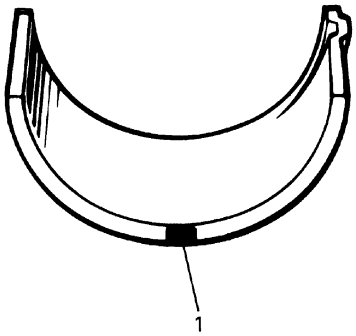

I3RH0A140019-01

1.	Paint

4) From number stamped on connecting rod and its cap and alphabets stamped on crank web No.3, determine new standard bearing to be installed to connecting rod big end inside, by referring to the table.
For example, if number stamped on connecting rod and its cap is “1” and alphabet stamped on crank web No.3 is “B”, install a new standard bearing painted in “Black” to its connecting rod big end inside.

Specification of new standard connecting rod bearing size

		Number stamped on connecting rod and its cap (connecting rod big end inside diameter)		
		1	2	3
Alphabet stamped on crank web No.3 (Crankshaft pin diameter)	A	Green	Black	Nothing
	B	Black	Nothing	Yellow
	C	Nothing	Yellow	Blue
		New standard bearing to be installed.		

Main Bearings, Crankshaft and Cylinder Block Components

S7RW0A1406036

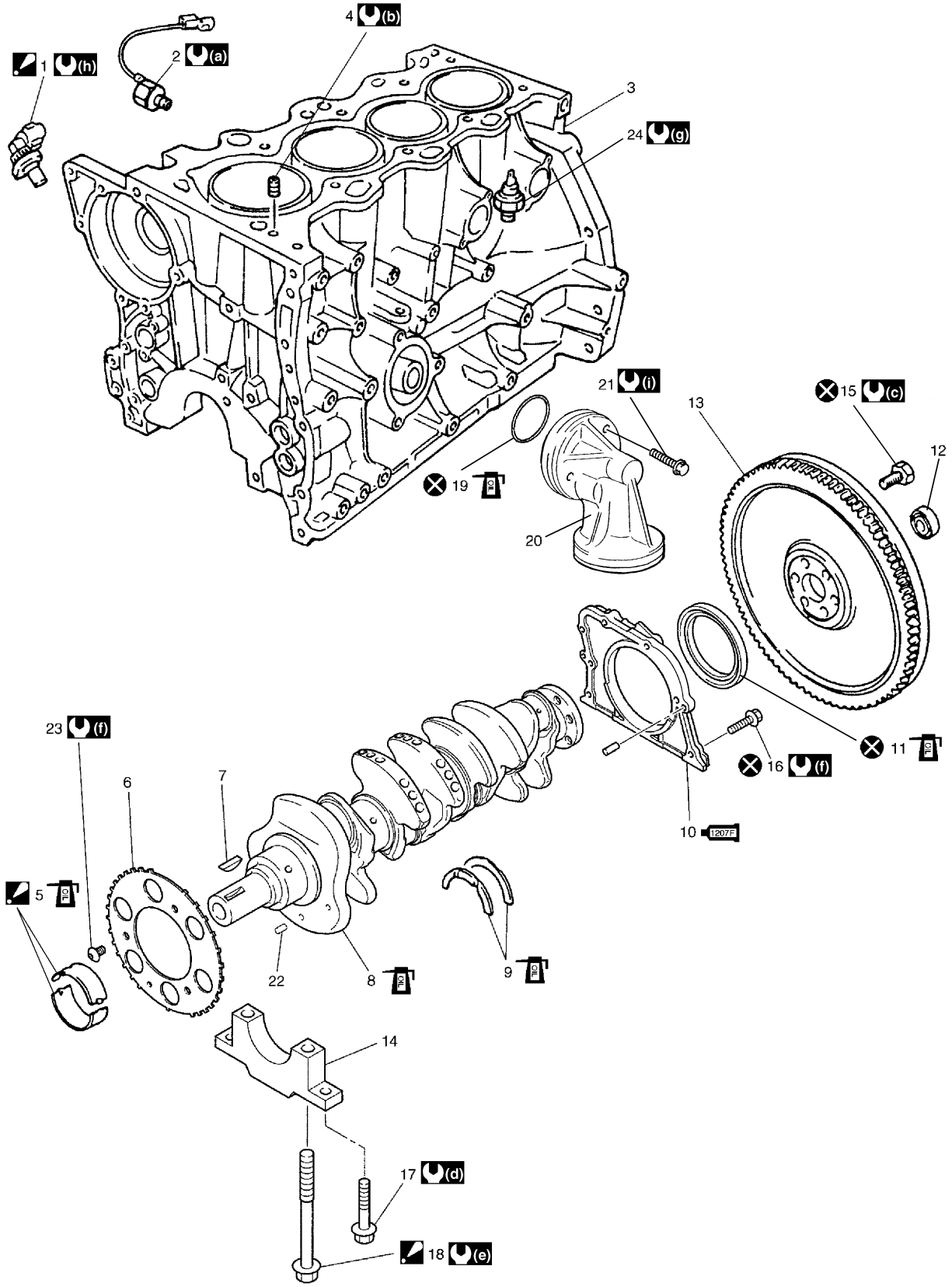

I6RW0D140003-01

1. CKP sensor : See “A”	11. Rear oil seal	21. Oil filter adapter bolt
2. Knock sensor	12. Input shaft bearing	22. Spring pin
3. Cylinder block	13. Flywheel or drive plate	23. Sensor plate bolt
4. Venturi plug	14. Main bearing cap	24. Oil pressure switch

5. Main bearing : See “B”	15. Flywheel or drive plate bolt	(a) : 22 N·m (2.2 kgf-m, 16.0 lb-ft)
6. Sensor plate	16. Rear oil seal housing mounting bolt	(b) : 5 N·m (0.5 kgf-m, 4.0 lb-ft)
7. Crankshaft timing sprocket key	17. Main bearing cap No.2 bolt	(c) : 70 N·m (7.0 kgf-m, 51.0 lb-ft)
8. Crankshaft	18. Main bearing cap No.1 bolt : See “D”	(d) : Tighten 25 N·m (2.5 kgf-m, 18.0 lb-ft) by the specified procedure.
9. Thrust bearing	19. O-ring	(e) : Tighten 30 N·m (3.0 kgf-m, 22.0 lb-ft), 50 N·m (5.0 kgf-m, 36.5 lb-ft) and 60° by the specified procedure.
1207F 10. Rear oil seal housing : See “C”	20. Oil filter adapter case	(f) : 11 N·m (1.1 kgf-m, 8.0 lb-ft)
“A”: When installing CKP sensor, use new sensor mounting bolt.		(g) : 13 N·m (1.3 kgf-m, 9.5 lb-ft)
“B”: Upper half of bearing has an oil groove. Do not apply oil between connecting rod and bearing or between bearing cap and bearing.		(h) : 10 N·m (1.0 kgf-m, 7.5 lb-ft)
“C”: Apply sealant 99000-31250 to mating surface.		(i) : 25 N·m (2.5 kgf-m, 18.0 lb-ft)
“D”: Make sure main bearing cap No.1 bolt deformation when reuse it due to plastic deformation tightening referring to “Main Bearings Inspection”.		: Do not reuse.
		OIL : Apply engine oil to inside / sliding surface.

Main Bearings, Crankshaft and Cylinder Block Removal and Installation

S7RW0A1406037

Removal

1) Remove engine assembly from vehicle referring to “Engine Assembly Removal and Installation”.
2) Remove clutch cover, clutch disc and flywheel (drive plate for A/T) by using special tool.

Special tool
(A): 09924–17810

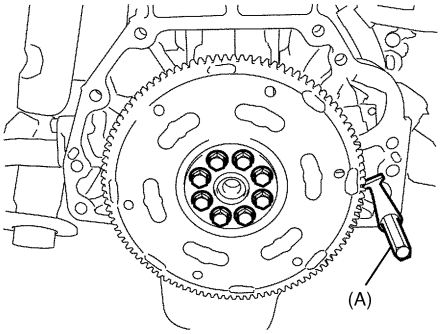

I2RH0B140125-01

3) Remove piston and connecting rod referring to “Pistons, Piston Rings, Connecting Rods and Cylinders Removal and Installation”.
4) Remove rear oil seal housing (1).

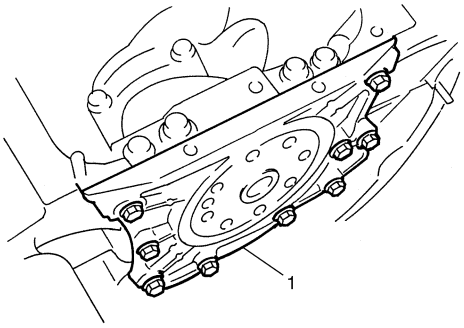

I2RH0B140126-01

5) Loosen main bearing cap No.1 and No.2 bolts in such order as indicated in figure and remove them.

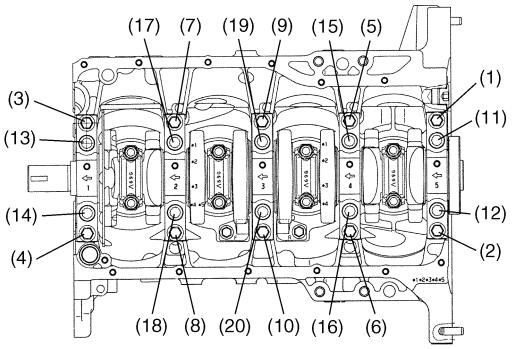

I2RH0B140127-01

6) Remove crankshaft from cylinder block.
7) Remove sensor plate from crankshaft.

Installation

NOTE

- **Use new bearing cap No.1 bolts. They are deformed once they are used because they are plastic deformation tightening bolts.**
- **All parts to be installed must be perfectly clean.**
- **Be sure to oil crankshaft journals, journal bearings, thrust bearings, crankpins, connecting rod bearings, pistons, piston rings and cylinder bores.**
- **Journal bearings, bearing caps, connecting rods, rod bearings, rod bearing caps, pistons and piston rings are in combination sets. Do not disturb such combination and make sure that each part goes back to where it came from, when installing.**

1) Install sensor plate (1) to crankshaft (2) and tighten bolts to specified torque.

NOTE

When installing sensor plate, align spring pin (3) on crankshaft and hole of sensor plate.

Tightening torque
Sensor plate bolt (a): 11 N·m (1.1 kgf-m, 8.0 lb-ft)

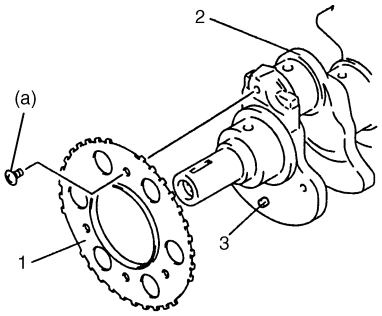

I2RH0B140128-01

2) Install main bearings to cylinder block.
Upper half of bearing (1), has an oil groove (2). Install it to cylinder block (3), and the other half without oil groove to bearing cap.
Make sure that two halves are painted in the same color.

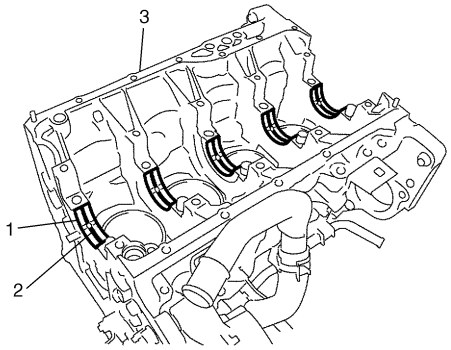

I2RH0B140129-01

3) Confirm that dowel pins (1) are installed to intake side of each journal.

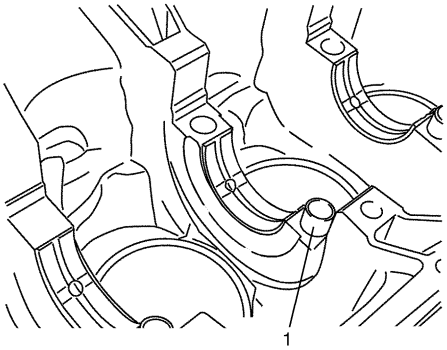

I6RW0B140013-02

4) Install crankshaft to cylinder block.
5) Install thrust bearings (1) to cylinder block between No.2 and No.3 cylinders. Face oil groove (2) sides to crank webs.

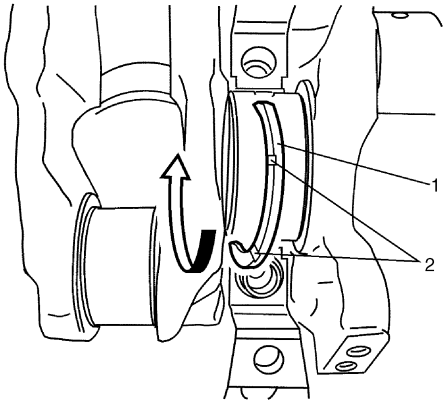

I6RW0B140014-01

6) Install bearing cap to cylinder block, making sure to point arrow mark (on each cap) to crankshaft pulley side. Fit them sequentially in ascending order, 1, 2, 3, 4 and 5, starting from pulley side.
After applying engine oil to main bearing cap No.1 bolts ((1) – (10)) and main bearing cap No.2 bolts ((11) – (20)), tighten them gradually as follows.
   a) Tighten bolts ((1) – (10)) to 30 N·m (3.0 kgf-m, 22.0 lb-ft) according to numerical order as shown by using a 12 corner socket wrenches.
   b) In the same manner as in Step a), tighten them to 50 N·m (5.0 kgf-m, 36.5 lb-ft).
   c) In the same manner as in Step a), retighten them to 60°.
   d) Tighten bolts ((11) – (20)) to 25 N·m (2.5 kgf-m, 18.0 lb-ft) according to numerical order as shown.

   Tightening torque
   Main bearing cap No.1 bolt ((1) – (10)): Tighten 30 N·m (3.0 kgf-m, 22.0 lb-ft), 50 N·m (5.0 kgf-m, 36.5 lb-ft) and 60° by the specified procedure
   Main bearing cap No.2 bolt ((11) – (20)): Tighten 25 N·m (2.5 kgf-m, 18.0 lb-ft) by the specified procedure

⚠ CAUTION

After tightening cap bolts, check to be sure that crankshaft rotates smoothly when turning it by 12 N·m (1.2 kgf-m, 9.0 lb-ft) torque or below.

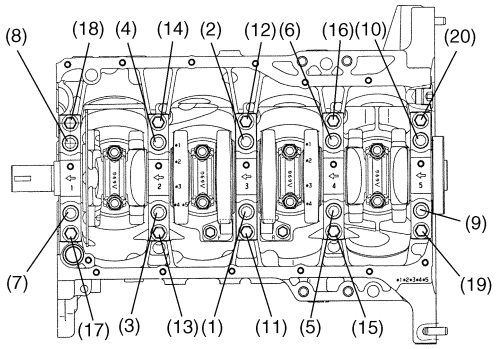

I2RH0B140131-01

7) If necessary, press-fit rear oil seal (1) to oil seal housing (2) by using special tool as shown in figure.

Special tool
(A): 09911–97821

<u>Crank rear oil seal installing position (dimension)</u>
"a": 2 mm (0.08 in.)

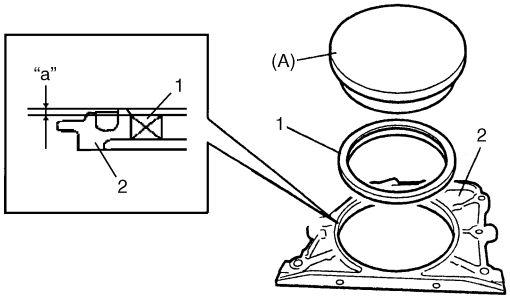

I5RW0C140027-01

8) Apply sealant to mating surface of rear oil seal housing (1).

"A": Water tight sealant 99000–31250 (SUZUKI Bond No.1207F)

<u>Sealant amount for rear oil seal housing</u>
Width: "a": 3 mm (0.12 in.)
Height "b": 2 mm (0.08 in.)

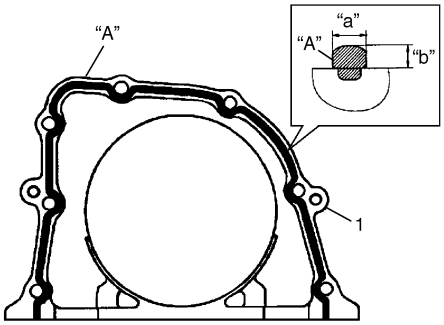

I4RS0A140018-01

9) Install rear oil seal housing (1) and tighten new bolts to specified torque by using special tool.

Special tool
(A): 09911–97720

Tightening torque
Rear oil seal housing bolt: 11 N·m (1.1 kgf-m, 8.0 lb-ft)

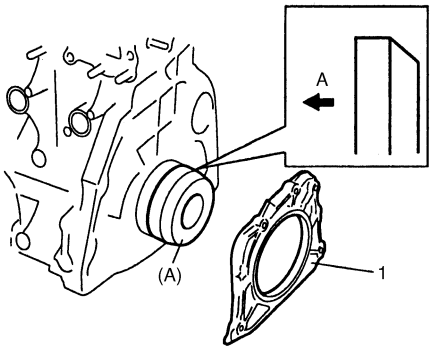

I4RS0A140019-01

A: Crankshaft side

10) Install flywheel (drive plate for A/T).
Using special tool, lock flywheel or drive plate, and tighten flywheel or drive plate bolts to specified torque.

NOTE

Use new flywheel or drive plate bolts.

Special tool
(A): 09924–17810

Tightening torque
Flywheel or drive plate bolt (a): 70 N·m (7.0 kgf-m, 51.0 lb-ft)

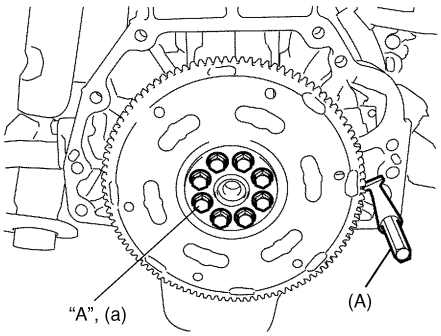

I2RH0B140134-01

11) Install piston and connecting rod referring to "Pistons, Piston Rings, Connecting Rods and Cylinders Removal and Installation".
12) Install cylinder head referring to "Valves and Cylinder Head Removal and Installation".
13) Install camshafts, tappet and shim referring to "Camshaft, Tappet and Shim Removal and Installation".
14) Install timing chain referring to "Timing Chain and Chain Tensioner Removal and Installation".
15) Install timing chain cover referring to "Timing Chain Cover Removal and Installation".
16) Install cylinder head cover referring to "Cylinder Head Cover Removal and Installation".
17) Install oil pan referring to "Oil Pan and Oil Pump Strainer Removal and Installation in Section 1E".
18) Install engine assembly to vehicle referring to "Engine Assembly Removal and Installation".

Crankshaft Inspection

S7RW0A1406038

Crankshaft Runout

Using a dial gauge, measure runout at center journal. Rotate crankshaft slowly. If runout exceeds its limit, replace crankshaft.

Crankshaft runout
Limit: 0.02 mm (0.0008 in.)

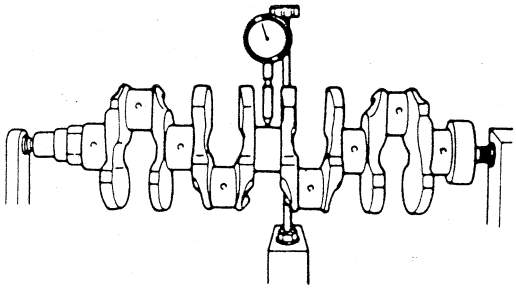

I2RH0B140135-01

Crankshaft Thrust Play

1) Measure this play with crankshaft set in cylinder block in the normal manner, that is with thrust bearing (1) and journal bearing caps installed.

Thickness of crankshaft thrust bearing
Standard: 2.470 – 2.520 mm (0.0972 – 0.0992 in.)
Oversize (0.125 mm (0.0049 in.)): 2.533 – 2.583 mm (0.0997 – 0.1017 in.)

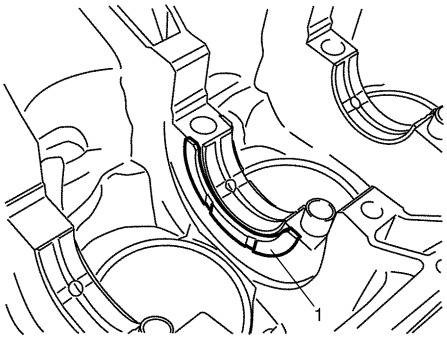

I2RH0B140136-01

2) Tighten main bearing cap No.1 bolts (1) – (10) and main bearing cap No.2 bolts (11) – (20) gradually as follows.
   a) Tighten bolts (1) – (10) to 30 N·m (3.0 kgf-m, 22.0 lb-ft) according to numerical order in figure.
   b) In the same manner as in Step a), tighten them to 50 N·m (5.0 kgf-m, 36.5 lb-ft).
   c) In the same manner as in Step a), retighten them to 60°.
   d) Tighten bolts (11) – (20) to 25 N·m (2.5 kgf-m, 18.0 lb-ft) according to numerical order in figure.

   Tightening torque
   Main bearing cap No.1 bolt ((1) – (10)): Tighten 30 N·m (3.0 kgf-m, 22.0 lb-ft), 50 N·m (5.0 kgf-m, 36.5 lb-ft) and 60° by the specified procedure
   Main bearing cap No.2 bolt ((11) – (20)): Tighten 25 N·m (2.5 kgf-m, 18.0 lb-ft) by the specified procedure

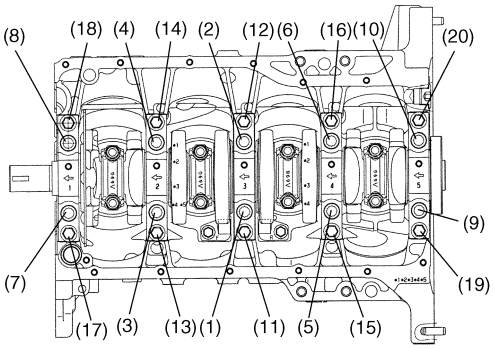

I2RH0B140137-01

3) Use a dial gauge to read displacement in axial (thrust) direction of crankshaft.
   If its limit is exceeded, replace thrust bearing with new standard one or oversize one to obtain standard thrust play.

   Crankshaft thrust play
   Standard: 0.11 – 0.31 mm (0.0043 – 0.0122 in.)
   Limit: 0.35 mm (0.0138 in.)

   NOTE

   After checking the thrust play, make sure that thread deformation of each bearing cap No.1 bolt referring to "Main Bearing Cap No.1 Bolt" in "Main Bearings Inspection".

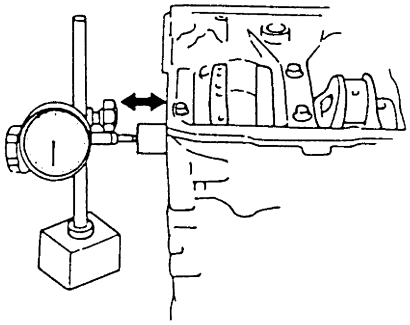
I2RH01140183-01

Out-of-Round and Taper (Uneven Wear) of Journals
An unevenly worn crankshaft journal shows up as a difference in diameter at a cross section or along its length (or both). This difference, if any, is determined by taking micrometer readings. If any one of journals is badly damaged or if amount of uneven wear in the sense exceeds its limit, regrind or replace crankshaft.

Crankshaft out-of-round and taper
Limit: 0.01 mm (0.0004 in.)

Out-of-round
A – B

Taper
a – b

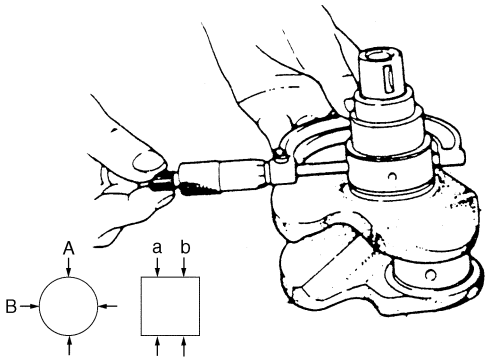

I2RH0B140138-01

Main Bearings Inspection

S7RW0A1406039

General Information

- Service main bearings are available in standard size and 0.25 mm (0.0098 in.) undersize, and each of them has 5 kinds of bearings differing in tolerance.
- Upper half of bearing (1) has oil groove (2) as shown in figure.
  Install this half with oil groove to cylinder block.
- Lower half of bearing does not have an oil groove.

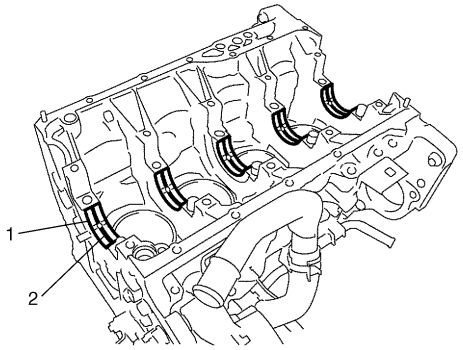

I2RH0B140139-01

Visual Inspection

Check bearings for pitting, scratches, wear or damage. If any malcondition is found, replace both upper and lower halves. Never replace either half without replacing the other half.

Main Bearing Clearance

NOTE

Do not rotate crankshaft while gauging plastic is installed.

Check clearance by using gauging plastic according to the following procedure.

1) Remove bearing caps.
2) Clean bearings and main journals.
3) Place a piece of gauging plastic (1) the full width of bearing (parallel to crankshaft) on journal, avoiding oil hole.

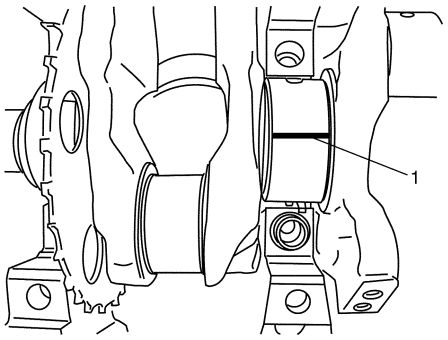

I2RH0B140140-01

4) Tighten main bearing cap No.1 bolts (1) – (10) and main bearing cap No.2 bolts (11) – (20) gradually as follows.
   a) Tighten bolts (1) – (10) to 30 N·m (3.0 kgf-m, 22.0 lb-ft) according to numerical order in figure.
   b) In the same manner as in Step a), tighten them to 50 N·m (5.0 kgf-m, 36.5 lb-ft).
   c) In the same manner as in Step a), retighten them to 60°.
   d) Tighten bolts (11) – (20) to 25 N·m (2.5 kgf-m, 18.0 lb-ft) according to numerical order in figure.

   Tightening torque
   Main bearing cap No.1 bolt ((1) – (10)): Tighten 30 N·m (3.0 kgf-m, 22.0 lb-ft), 50 N·m (5.0 kgf-m, 36.5 lb-ft) and 60° by the specified procedure
   Main bearing cap No.2 bolt ((11) – (20)): Tighten 25 N·m (2.5 kgf-m, 18.0 lb-ft) by the specified procedure

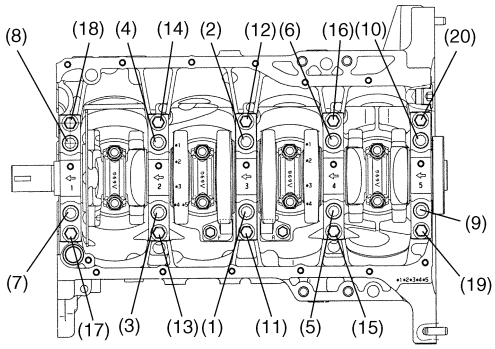

I2RH0B140137-01

5) Remove bearing caps and using scale (1) on gauging plastic envelop (2), measure gauging plastic width at its widest point. If clearance exceeds its limit, replace bearing. Always replace both upper and lower inserts as a unit.
   A new standard bearing may produce proper clearance. If not, it will be necessary to regrind crankshaft journal for use of 0.25 mm undersize bearing.
   After selecting new bearing, recheck clearance.

   <u>Main bearing clearance</u>
   Standard: 0.021 – 0.041 mm (0.0008 – 0.0016 in.)
   Limit: 0.054 mm (0.0021 in.)

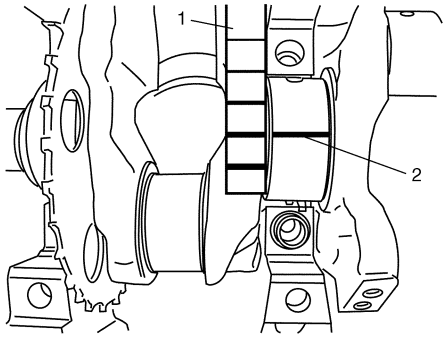

I2RH0B140141-01

Selection of Main Bearings

Standard bearing

If bearing is in malcondition, or bearing clearance is out of specification, select a new standard bearing according to the following procedure and install it.

1) First check journal diameter. As shown in figure, crank web No.2 has stamped numbers.
   Three kinds of numbers (“1”, “2” and “3”) represent the following journal diameters.
   Stamped numbers on crank web No.2 represent journal diameters marked with an arrow in figure respectively. For example of M15 engine, stamped number “1” indicates that corresponding journal diameter is 51.9940 – 52.0000 mm (2.0471 – 2.0472 in.).

Crankshaft journal diameter

Stamped numbers	Journal diameter
1	51.9940 – 52.0000 mm (2.0471 – 2.0472 in.)
2	51.9880 – 51.9939 mm (2.0468 – 2.0470 in.)
3	51.9820 – 51.9879 mm (2.0465 – 2.0467 in.)

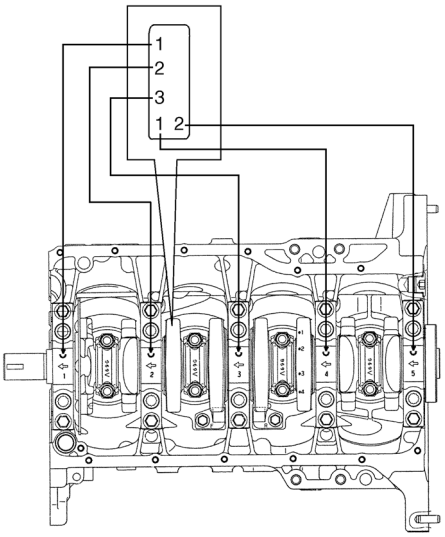

I2RH0B140142-02

2) Next, check bearing cap bore diameter without bearing. On mating surface of cylinder block, five alphabets are stamped as shown in figure.
   Three kinds of alphabets (“A”, “B” and “C”) or numbers (“1”, “2” and “3”) represent the following cap bore diameters.
   Stamped alphabets or numbers on cylinder block represent bearing cap bore diameter marked with an arrow in figure respectively.
   For example, stamped “A” or “1” indicates that corresponding bearing cap bore diameter is 56.0000 – 56.0060 mm (2.2048 – 2.2049 in.).

Crankshaft bearing cap bore

Stamped alphabet (number)	Bearing cap bore diameter (without bearing)
A or 1	56.0000 – 56.0060 mm (2.2048 – 2.2049 in.)
B or 2	56.0061 – 56.0120 mm (2.2050 – 2.2051 in.)
C or 3	56.0121 – 56.0180 mm (2.2052 – 2.2054 in.)

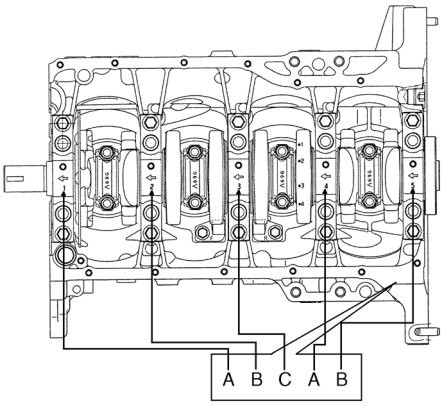

I2RH0B140143-02

3) There are 5 kinds of standard bearings differing in thickness. To distinguish them, they are painted in the following colors at the position as indicated in figure.
   Each color indicated the following thickness at the center of bearing.

Standard size of crankshaft main bearing thickness

Color painted	Bearing thickness
Purple	1.992 – 1.996 mm (0.07843 – 0.07858 in.)
Brown	1.995 – 1.999 mm (0.07855 – 0.07870 in.)
Green	1.998 – 2.002 mm (0.07867 – 0.07882 in.)
Black	2.001 – 2.005 mm (0.07878 – 0.07893 in.)
Colorless (no paint)	2.004 – 2.008 mm (0.07890 – 0.07906 in.)

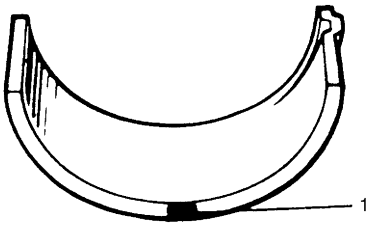

I2RH01140191-01

1. Paint

4) From number stamped on crank web No.2 and alphabets stamped on cylinder block, determine new standard bearing to be installed to journal, by referring to the table shown.
For example, if number stamped on crank web No.2 is “1” and alphabet stamped on cylinder block is “B”, install a new standard bearing painted in “Brown” to its journal.

New standard size crankshaft main bearing specification

		Number stamped on crank web No.2 (Journal diameter)		
		1	2	3
Alphabet stamped on cylinder block (Cap bore dia.)	A or 1	Purple	Brown	Green
	B or 2	Brown	Green	Black
	C or 3	Green	Black	Colorless
		New standard bearing to be installed		

5) Using scale (1) on gauging plastic (2), check bearing clearance with newly selected standard bearing.
If clearance still exceeds its limit, use next thicker bearing and recheck clearance.

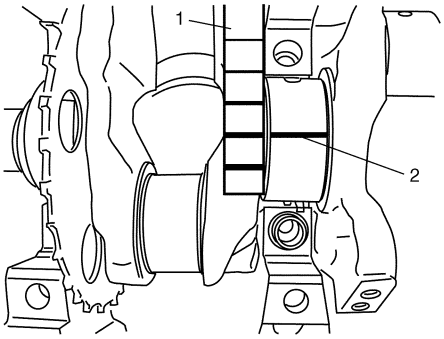

I2RH0B140141-01

6) When replacing crankshaft or cylinder block due to any reason, select new standard bearings to be installed by referring to number stamped on new crankshaft or alphabets stamped on new cylinder block.

Undersize bearing (0.25 mm (0.0098 in.))

- 0.25 mm (0.0098 in.) undersize bearing is available, in five kinds varying in thickness.
  To distinguish them, each bearing is painted in the following colors at such position as indicated in figure.
  Each color represents the following thickness at the center of bearing.

Undersize of crankshaft main bearing thickness

Color painted	Bearing thickness
Red and Purple	2.117 – 2.121 mm (0.08335 – 0.08350 in.)
Red and Brown	2.120 – 2.124 mm (0.08347 – 0.08362 in.)
Red and Green	2.123 – 2.127 mm (0.08359 – 0.08374 in.)
Red and Black	2.126 – 2.130 mm (0.08371 – 0.08385 in.)
Red only	2.129 – 2.133 mm (0.08382 – 0.08397 in.)

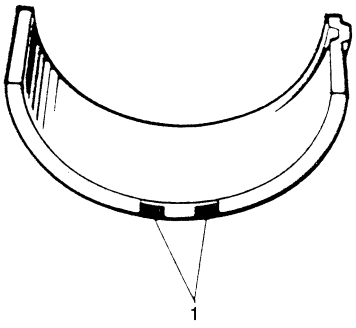

I2RH01140192-01

1. Paint

- If necessary, regrind crankshaft journal and select undersize bearing to use with it as follows.
  a. Regrind journal to the following finished diameter.

     Finished journal diameter
     51.7320 – 51.7500 mm (2.0367 – 2.0374 in.)

  b. Using micrometer, measure regrind journal diameter.
     Measurement should be taken in two directions perpendicular to each other in order to check for out-of-round.
  c. Using journal diameter measured above and alphabets stamped on cylinder block, select an undersize bearing by referring to the following table.
     Check bearing clearance with newly selected undersize bearing.

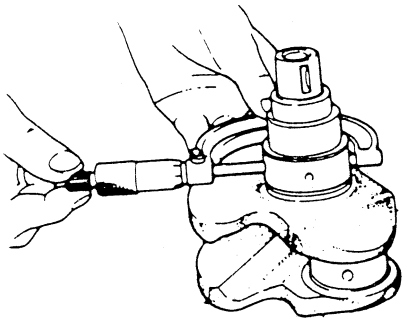

I2RH0B140144-01

New undersize crankshaft main bearing specification

		Measured journal diameter		
		51.7320 – 51.7379 mm (2.0367 – 2.0369 in.)	51.7380 – 51.7439 mm (2.0370 – 2.0371 in.)	51.7440 – 51.7500 mm (2.0372 – 2.0373 in.)
Alphabets stamped on cylinder block	A (1)	Red and Green	Red and Brown	Red and Purple
	B (2)	Red and Black	Red and Green	Red and Brown
	C (3)	Red only	Red and Black	Red and Green
		Undersize bearing to be installed		

Main Bearing Cap No.1 Bolt
Measure each thread diameter main bearing cap No.1 bolts (1) at “A” on 60 mm (2.36 in.) from seat side of flange bolt and “B” on 90 mm (3.54 in.) from seat side of flange bolt by using a micrometer (2).
Calculate difference in diameters (“A” – “B”).
If it exceeds limit, replace with new one.

Main bearing cap No.1 bolt diameter measurement points
“a”: 60 mm (2.36 in.)
“b”: 90 mm (3.54 in.)

Main bearing cap No.1 bolt diameter difference
Limit (“A” – “B”): 0.2 mm (0.008 in.)

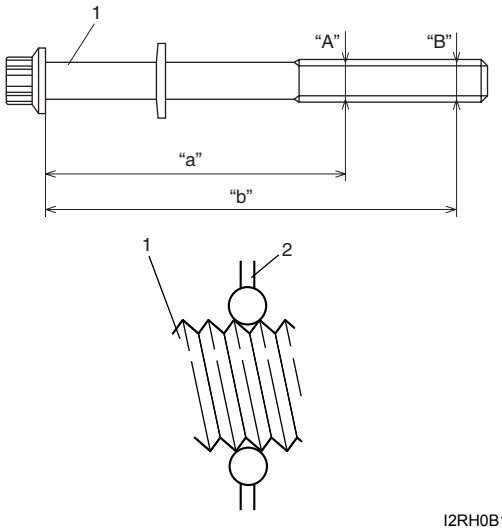

I2RH0B140145-01

Sensor Plate Inspection

S7RW0A1406040

Check sensor plate for crack damage.
If malcondition is found, replace it.

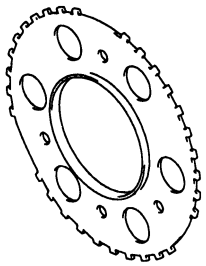

I2RH0B140151-01

Rear Oil Seal Inspection

S7RW0A1406041

Carefully inspect oil seal (1) for wear or damage. If its lip is worn or damaged, replace it.

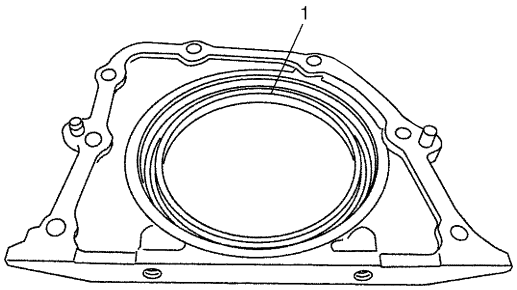

I4RS0A140020-01

Flywheel Inspection

S7RW0A1406042

Visual Inspection

- If ring gear is damaged, cracked or worn, replace flywheel.
- If the surface contacting clutch disc is damaged, or excessively worn, replace flywheel.

Flywheel Face Runout

Check flywheel face runout with a dial gauge.
If runout exceeds its limit, replace flywheel.

Flywheel face runout
Limit: 0.2 mm (0.0079 in.)

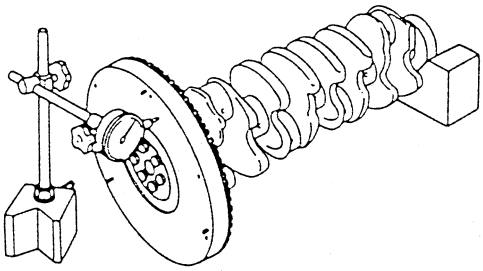

I2RH01140198-01

Cylinder Block Inspection

S7RW0A1406043

Distortion of Gasketed Surface

Using straightedge and thickness gauge, check gasketed surface for distortion and, if flatness exceeds its limit, correct It.

Cylinder block flatness
Limit: 0.03 mm (0.0012 in.)

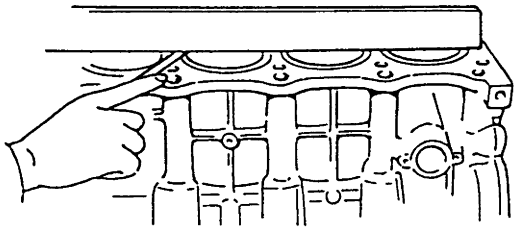

I2RH01140199-01

Honing or Reboring Cylinders

1) When any cylinder needs reboring, all other cylinders must also be rebored at the same time.
2) Select oversized piston according to amount of cylinder wear.

   Oversize piston specification
   Oversize 0.50: 78.453 – 78.468 mm (3.0887 – 3.0893 in.)

3) Using micrometer, measure piston diameter.

   Measurement position for piston diameter
   “a”: 19.5 mm (0.77 in.)

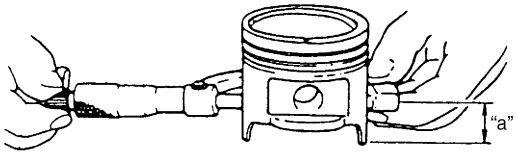

I2RH01140157-01

4) Rebore and hone cylinder to the following dimension.

   NOTE

   Before reboring, install all main bearing caps in place and tighten to specification to avoid distortion of bearing bores.

   Cylinder bore diameter to be rebored
   Oversize 0.50: 78.500 – 78.514 mm (3.0906 – 3.0911 in.)

5) Measure piston clearance after honing.

   Piston clearance
   0.032 – 0.061 mm (0.0013 – 0.0024 in.)

Specifications

Tightening Torque Specifications

S7RW0A1407001

Fastening part	Tightening torque			Note
	N·m	kgf-m	lb-ft	
Camshaft housing bolt	Tighten 11 N·m (1.1 kgf-m, 8.0 lb-ft) by the specified procedure			☞ / ☞
EVAP canister purge valve bracket bolt	5	0.5	4.0	☞ / ☞
Cylinder head cover bolt	Tighten 8 N·m (0.8 kgf-m, 6.0 lb-ft) by the specified procedure			☞
Engine right mounting bracket nut	65	6.5	47.0	☞
Engine right mounting bush bolt	55	5.5	40.0	☞
Engine left mounting bush bolt	85	8.5	61.5	☞
Suspension frame mounting bolt	150	15.0	108.5	☞
Front lower cross member bolt	55	5.5	40.0	☞
Starting motor terminal nut	11	1.1	8.0	☞
Generator terminal nut	5	0.5	4.0	☞
Battery ground bolt	25	2.5	18.0	☞
Ground terminal bolt	11	1.1	8.0	☞
Timing chain cover bolt	25	2.5	18.0	☞
Timing chain cover nut	25	2.5	18.0	☞
Cap bolt	25	2.5	18.0	☞
Oil gallery pipe No.2 and No.3 bolt	11	1.1	8.0	☞
Crankshaft pulley bolt	150	15.0	108.5	☞
Oil control valve mounting nut	11	1.1	8.0	☞
Oil gallery pipe No.1 bolt	30	3.0	21.5	☞
Timing chain No.1 guide bolt	11	1.1	8.0	☞
Timing chain tensioner bolt	25	2.5	18.0	☞
Timing chain tensioner adjuster bolt	11	1.1	8.0	☞
Intake cam timing sprocket bolt	60	6.0	43.5	☞
Camshaft housing bolt	11	1.1	8.0	☞
Venturi plug	5	0.5	3.5	☞
Cylinder head bolt for M8	Tighten 25 N·m (2.5 kgf-m, 18.0 lb-ft) by the specified procedure			☞
Cylinder head bolt for M10	Tighten 20 N·m (2.0 kgf-m, 14.5 lb-ft), 40 N·m (4.0 kgf-m, 29.0 lb-ft), 60° and 60° by the specified procedure			☞
Connecting rod bearing cap nut	Tighten 15 N·m (1.5 kgf-m, 11.0 lb-ft), 45° and 45° by the specified procedure			☞ / ☞
Sensor plate bolt	11	1.1	8.0	☞
Main bearing cap No.1 bolt	Tighten 30 N·m (3.0 kgf-m, 22.0 lb-ft), 50 N·m (5.0 kgf-m, 36.5 lb-ft) and 60° by the specified procedure			☞ / ☞ / ☞
Main bearing cap No.2 bolt	Tighten 25 N·m (2.5 kgf-m, 18.0 lb-ft) by the specified procedure			☞ / ☞ / ☞
Rear oil seal housing bolt	11	1.1	8.0	☞
Flywheel or drive plate bolt	70	7.0	51.0	☞

NOTE

The specified tightening torque is also described in the following.
“Air Intake System Components”
“Engine Mountings Components”
“Timing Chain Cover Components”
“Timing Chain and Chain Tensioner Components”
“Camshaft, Tappet and Shim Components”
“Valves and Cylinder Head Components”
“Pistons, Piston Rings, Connecting Rods and Cylinders Components”
“Main Bearings, Crankshaft and Cylinder Block Components”

Reference:
For the tightening torque of fastener not specified in this section, refer to “Fasteners Information in Section 0A”.

Special Tools and Equipment

Recommended Service Material

S7RW0A1408001

Material	SUZUKI recommended product or Specification		Note
Sealant	SUZUKI Bond No.1217G	P/No.: 99000–31260	☞
Water tight sealant	SUZUKI Bond No.1207B	P/No.: 99000–31140	☞
	SUZUKI Bond No.1207F	P/No.: 99000–31250	☞ / ☞ / ☞

NOTE

Required service material is also described in the following.
“Timing Chain Cover Components”
“Timing Chain and Chain Tensioner Components”
“Camshaft, Tappet and Shim Components”
“Valves and Cylinder Head Components”
“Pistons, Piston Rings, Connecting Rods and Cylinders Components”
“Main Bearings, Crankshaft and Cylinder Block Components”

Special Tool

S7RW0A1408002

09911–97720 Oil seal installer ☞ 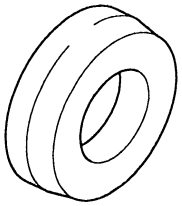	09911–97821 Oil seal installer ☞ 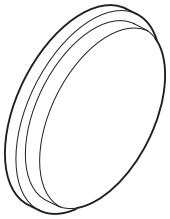
09913–75810 Bearing installer ☞ 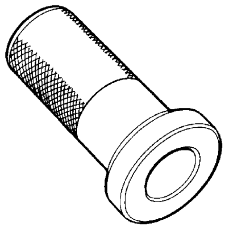	09915–64512 Compression gauge ☞ 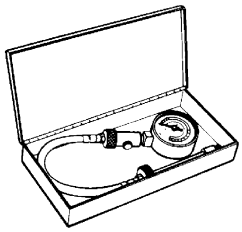
09915–64530 Compression gauge hose ☞ 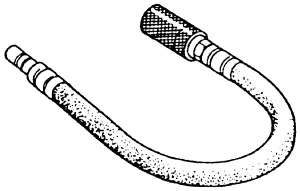	09915–67010 Compression gauge attachment (C) ☞ 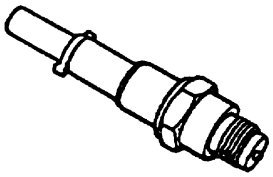
09915–67311 Vacuum gauge ☞ 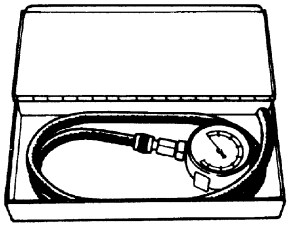	09916–14510 Valve lifter ☞ / ☞ 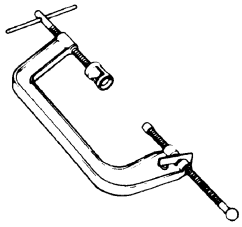

09916–14521 Valve spring compressor attachment ☞ / ☞	09916–34542 Reamer handle ☞ / ☞
09916–34550 Reamer handle ☞	09916–37320 Valve guide outer reamer (10.5 mm) ☞
09916–44910 Valve guide installer & remover ☞	09916–56011 Valve guide installer attachment (protrusion: 11.5 mm) ☞
09916–58210 Valve guide installer handle ☞ / ☞	09916–67020 Tappet holder (Overseas) ☞ / ☞
09916–67021 Tappet holder ☞ / ☞	09916–77310 Piston ring compressor (50-125 mm) ☞
09916–84511 Forceps ☞ / ☞	09917–68221 Camshaft pulley holder ☞ / ☞
09917–98221 Valve guide stem attachment ☞	09924–17810 Flywheel holder (drive plate stopper) ☞ / ☞
09926–58010 Bearing remover attachment ☞	09944–36011 Steering wheel remover ☞

Engine Lubrication System

General Description

Engine Lubrication Description

S7RW0A1501001

The oil pump is of a trochoid type, and mounted on the crankshaft. Oil is drawn up through the oil pump strainer and passed through the pump to the oil filter.
The filtered oil flows into two paths in cylinder block.
In one path, oil reaches the crankshaft journal bearings. Oil from the crankshaft journal bearings is supplied to the connecting rod bearings by means of intersecting passages drilled in the crankshaft, and then injected from the big end of connecting rod to lubricate piston, rings and cylinder wall.
In the other path oil goes up to the cylinder head and lubricates valves and camshafts, etc., after passing through the internal oil way of camshafts.
An oil relief valve is provided on the oil pump. This valve starts relieving oil pressure when the pressure exceeds specified pressure.

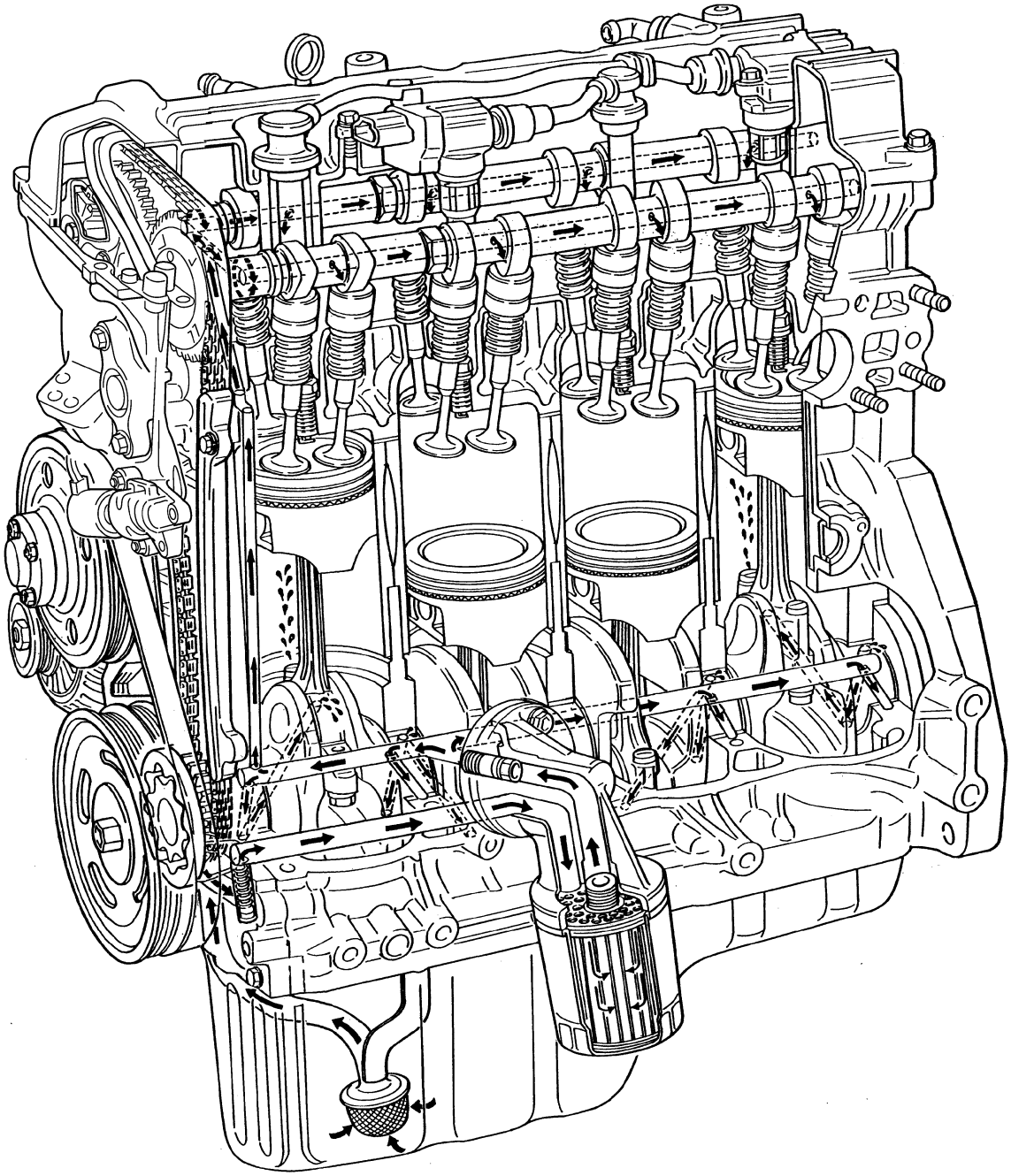

I5RW0C150002-01

Diagnostic Information and Procedures

Oil Pressure Check

S7RW0A1504001

⚠ WARNING

To avoid the danger of being burned, do not touch the exhaust system when the system is hot. Any service on the exhaust system should be performed when the system is cool.

NOTE

Prior to checking oil pressure, check the following.

- **Oil level in oil pan**
  If oil level is low, add oil up to full level mark (hole) (1) on oil level gauge referring to "Engine Oil and Filter Change in Section 0B".

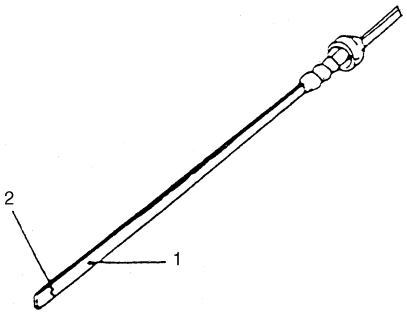

I2RH0B150002-01

2. Low level mark (hole)

- **Oil quality**
  If oil is discolored or deteriorated, change it. For particular oil to be used, refer to "Engine Oil and Filter Change in Section 0B".
- **Oil leaks**
  If leak is found, repair it.

1) Disconnect oil pressure switch coupler (1).
2) Remove oil pressure switch (2) from cylinder block.

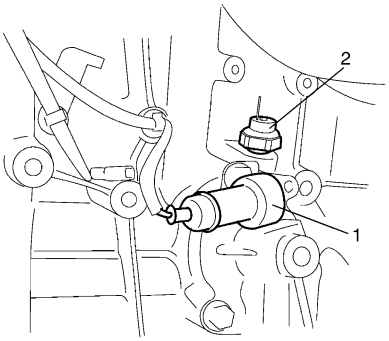

I2RH0B150003-01

3) Install special tools (oil pressure gauge) to vacated threaded hole of oil pressure switch.

Special tool
(A): 09915–77310
(B): 09915–78211

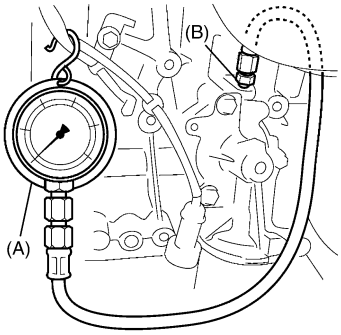

I2RH0B150004-01

4) Start engine and warm engine up to normal operating temperature.

NOTE

Be sure to shift transaxle gear shift lever in "Neutral", set parking brake and block drive wheels.

5) After warming up, raise engine speed to 4,000 r/min. and measure oil pressure.

Oil pressure specification
More than 270 kPa (2.7 kgf/cm^2, 39.8 psi) at 4,000 r/min. (rpm)

6) After checking oil pressure, stop engine and remove oil pressure gauge and attachment.
7) Before reinstalling oil pressure switch (2), be sure to wrap its screw threads with sealing tape (1) and tighten switch to specified torque.

NOTE

If sealing tape edge is bulged out from screw threads of switch, cut it off.

Tightening torque
Oil pressure switch (a): 13 N·m (1.3 kgf-m, 9.5 lb-ft)

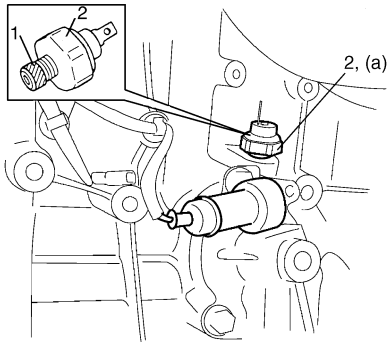

I2RH0B150005-01

8) Start engine and check oil pressure switch for oil leakage. If oil leakage is found, repair it.
9) Connect oil pressure switch coupler (1).

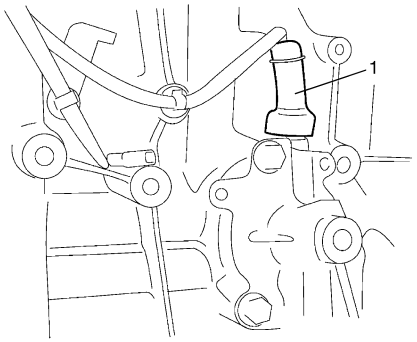

I2RH0B150006-01

Repair Instructions

Oil Pan and Oil Pump Strainer Components

S7RW0A1506001

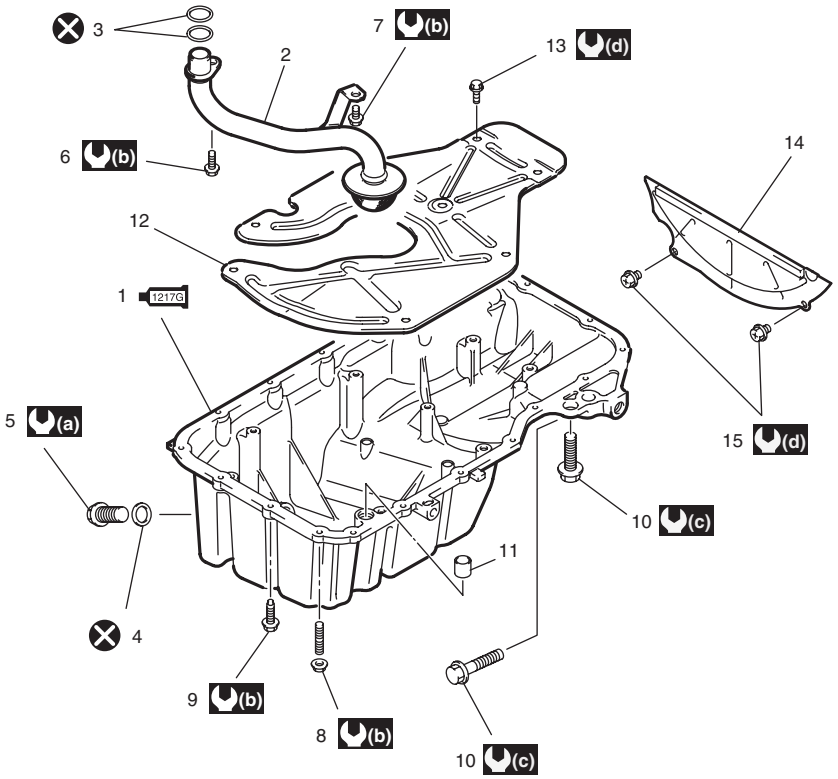

I5RH0A150002-02

1217G 1. Oil pan: Apply sealant 99000-31260 to mating surface.	6. Strainer bolt	11. Dowel pin	(a) : 35 N·m (3.5 kgf-m, 25.5 lb-ft)
2. Strainer	7. Bracket bolt	12. Baffle plate	(b) : Tighten 11 N·m (1.1 kgf-m, 8.0 lb-ft) by the specified procedure.
3. O-ring	8. Oil pan nut	13. Baffle plate bolt	(c) : 55 N·m (5.5 kgf-m, 40.0 lb-ft)
4. Gasket	9. Oil pan bolt (M6)	14. Clutch housing lower plate (M/T vehicle) or torque converter housing lower plate (A/T vehicle)	(d) : 11 N·m (1.1 kgf-m, 8.0 lb-ft)
5. Drain plug	10. Oil pan bolt (M10)	15. Lower plate bolt	⊗ : Do not reuse.

Oil Pan and Oil Pump Strainer Removal and Installation

S7RW0A1506002

Removal

1) Remove oil level gauge.
2) Drain engine oil by removing drain plug.
3) For 4WD model, dismount transfer referring to “Transfer Dismounting and Remounting in Section 3C”.
4) Remove clutch housing lower plate (1).

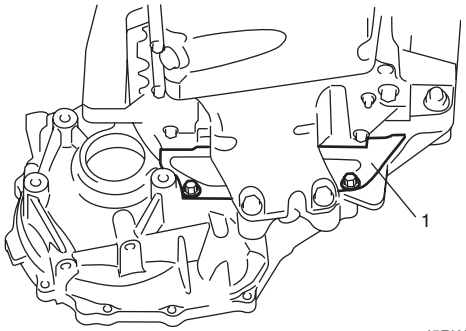

I5RW0A150002-01

5) Remove oil pan and then oil pump strainer (1) from cylinder block.

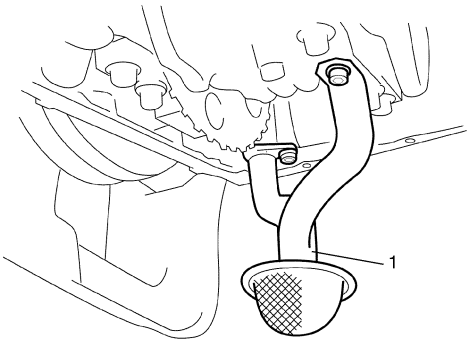

I2RH0B150010-01

Installation

1) Install new O-rings (2) in the position as shown in the figure and install oil pump strainer (1).
   Tighten strainer bolt (3) first and then bracket bolt (4) to specified torque.

   Tightening torque
   Oil pump strainer bolt (a): 11 N·m (1.1 kgf-m, 8.0 lb-ft)
   Oil pump strainer bracket bolt (b): 11 N·m (1.1 kgf-m, 8.0 lb-ft)

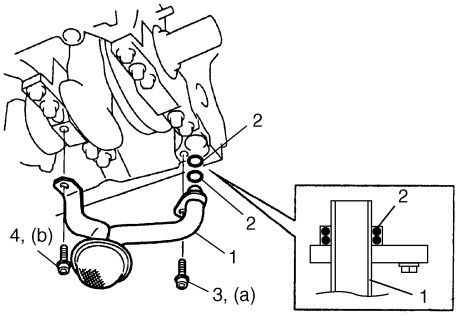

I2RH0B150012-01

2) Install dowel pin (1) to oil pan.

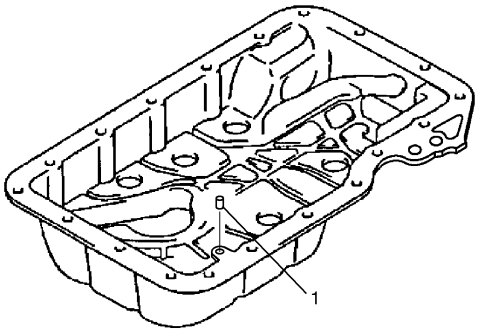

I4RS0A150005-01

3) Apply sealant continuously to oil pan mating surface as shown in the figure.

   “A”: Sealant 99000–31260 (SUZUKI Bond No.1217G)

   <u>Sealant amount for oil pan</u>
   Width “a”: 3 mm (0.12 in.)
   Height “b”: 2 mm (0.08 in.)

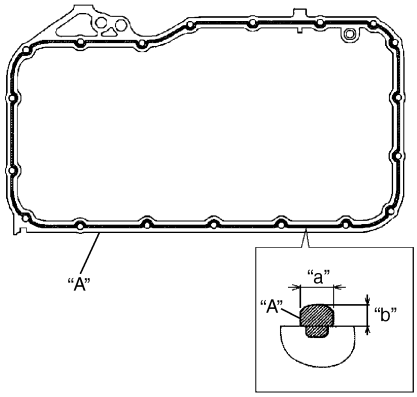

I4RS0A150006-01

4) Install oil pan to cylinder block temporarily.
5) Insert dowel pin (1) in hole (2) of oil pan in order to locate oil pan precisely.

NOTE

Dowel pin is available as a spare part (part number: 04211–13189).

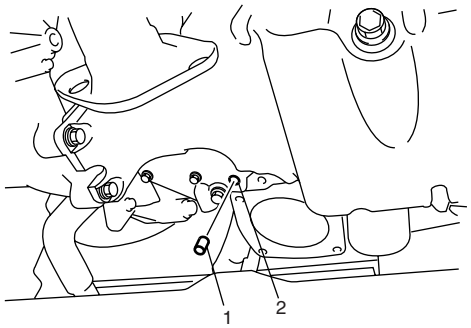

I4RS0A150007-01

6) After fitting oil pan to cylinder block, run in securing bolts and start tightening at the center: move wrench outward, tightening one bolt at a time. Tighten bolts and nuts to specified torque.

Tightening torque
Oil pan bolt (M6) (a): 11 N·m (1.1 kgf-m, 8.0 lb-ft)
Oil pan bolt (M10) (c): 55 N·m (5.5 kgf-m, 40.0 lb-ft)
Oil pan nut (e): 11 N·m (1.1 kgf-m, 8.0 lb-ft)

7) After applying engine oil to drain plug, install new gasket and drain plug to oil pan.
Tighten drain plug to specified torque.

Tightening torque
Oil pan drain plug (b): 35 N·m (3.5 kgf-m, 25.5 lb-ft)

8) Tighten transaxle stiffener bolts to specified torque.

Tightening torque
Transaxle stiffener bolt (d): 55 N·m (5.5 kgf-m, 40.0 lb-ft)

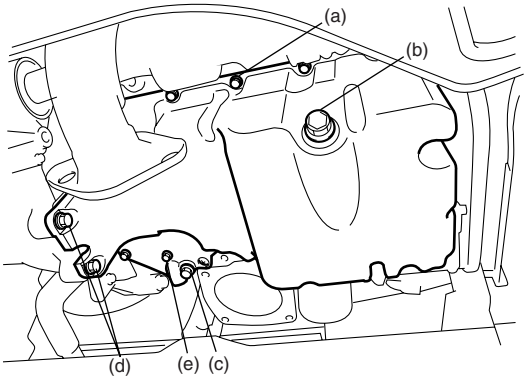

I4RS0A150008-01

9) Install clutch housing lower plate (1) and then tighten clutch housing lower plate bolt to specified torque.

Tightening torque
Clutch housing lower plate bolt (a): 11 N·m (1.1 kgf-m, 8.0 lb-ft)

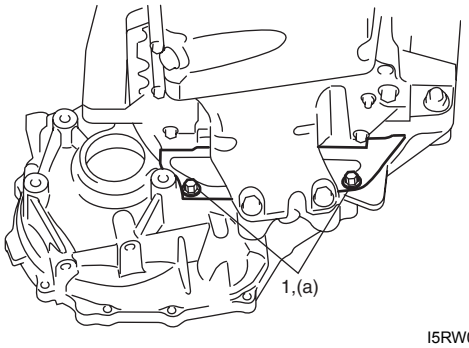

I5RW0A150003-01

10) For 4WD model, remount transfer referring to “Transfer Dismounting and Remounting in Section 3C”.
11) Install oil level gauge.
12) Refill engine with engine oil referring to “Engine Oil and Filter Change in Section 0B”.
13) Verify that there is no engine oil leakage and exhaust gas leakage at each connection.

Oil Pan and Oil Pump Strainer Cleaning

S7RW0A1506003

- Clean sealing surface between oil pan and cylinder block.
  Remove oil, old sealant, and dust from sealing surface.
- Clean oil pump strainer screen (1).

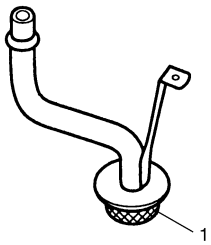

I2RH0B150016-01

Oil Pump Components

S7RW0A1506004

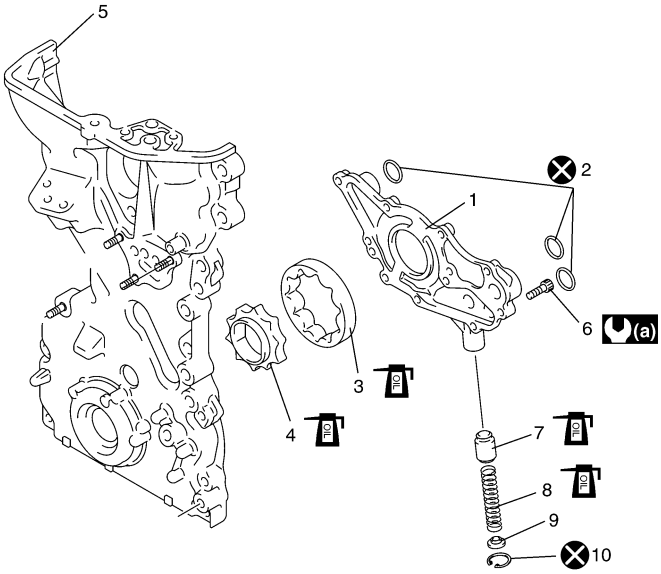

I4RS0A150010-01

1. Rotor plate	6. Rotor plate bolt	(a) : 11 N·m (1.1 kgf-m 8.0 lb-ft)
2. O-ring	7. Relief valve	: Do not reuse.
3. Outer rotor	8. Spring	: Apply thin coat of engine oil to sliding surface.
4. Inner rotor	9. Retainer	
5. Timing chain cover	10. Circlip	

Oil Pump Removal and Installation

S7RW0A1506005

Oil pump is incorporated with timing chain cover.
For removal and installation, refer to “Timing Chain Cover Removal and Installation in Section 1D”.

Oil Pump Disassembly and Reassembly

S7RW0A1506006

Disassembly

1) Remove rotor plate (1) by removing its mounting bolts.

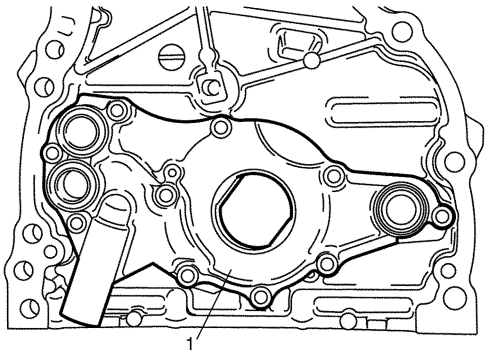

I2RH0B150018-01

2) Remove outer rotor (1) and inner rotor (2).

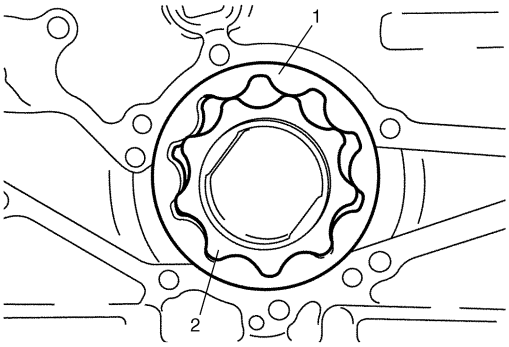

I2RH0B150019-01

3) Remove relief valve (1), spring (2) and retainer (3) by removing circlip (4).

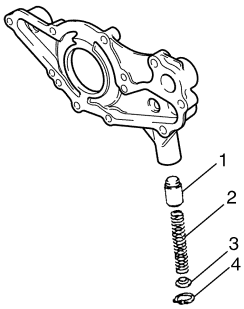

I2RH0B150020-01

Reassembly

1) Wash, clean and then dry all disassembled parts.
2) Apply thin coat of engine oil to inner and outer rotors, oil seal lip portion, inside surfaces of oil pump case and plate.
3) Install outer (1) and inner rotors (2) to oil pump case.

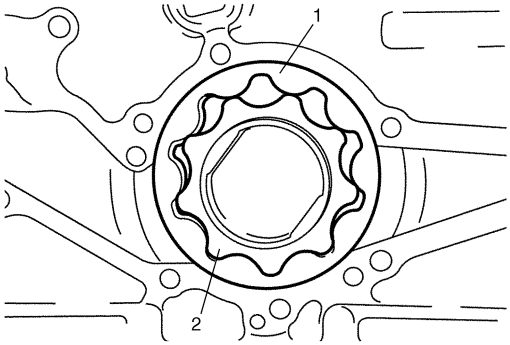

I2RH0B150019-01

4) Apply engine oil to relief valve (1) and spring (2), and install them with retainer (3) and new circlip (4) to rotor plate (5).

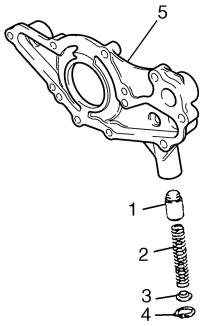

I3RM0A150005-01

5) Install rotor plate and tighten all bolts to specified torque. After installing plate, check to be sure that rotors turn smoothly by hand (0.3 N·m (0.03 kgf-m, 0.25 lb-ft) torque or below).

Tightening torque
Oil pump rotor plate bolt (a): 11 N·m (1.1 kgf-m, 8.0 lb-ft)

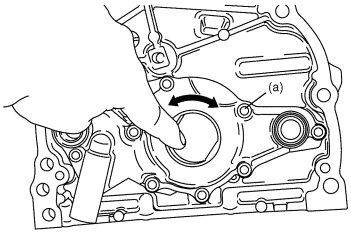

I2RH0B150022-01

Oil Pump Inspection

S7RW0A1506007

Oil Seal

Check oil seal lip for fault or other damage. Replace as necessary.

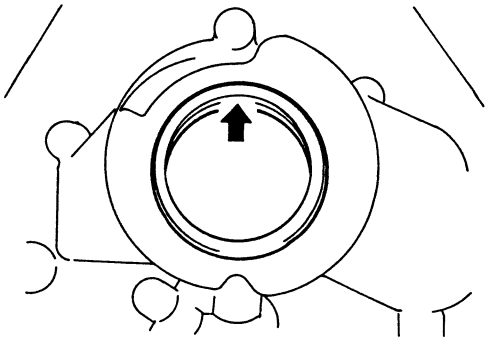

I2RH0B150023-01

Oil Pump

- Check outer (1) and inner rotors (2), rotor plate, and oil pump case for excessive wear or damage.

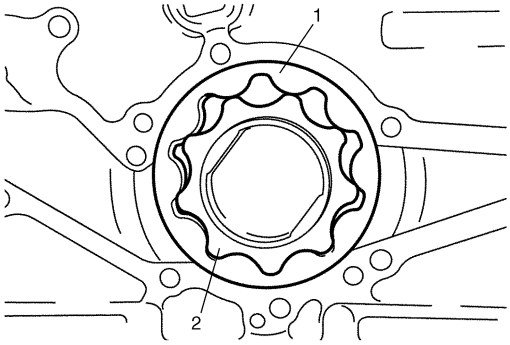

I2RH0B150019-01

- Check relief valve (1) for excessive wear or damage and operates smoothly.

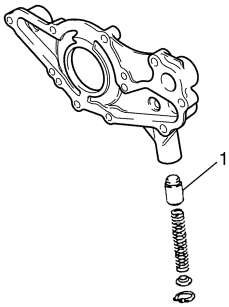

I2RH0B150025-01

Radial clearance

Check radial clearance between outer rotor (1) and case (2) using thickness gauge (3).
If clearance exceeds its limit, replace outer rotor or case.

Radial clearance between outer rotor and case for oil pump

Limit: 0.310 mm (0.0122 in.)

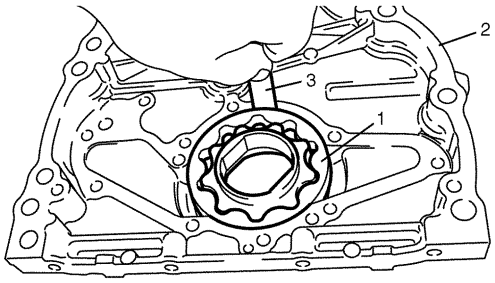

I2RH0B150026-01

Side clearance

Using straightedge (1) and thickness gauge (2), measure side clearance.
If side clearance exceeds its limit, replace oil pump assembly.

Side clearance for oil pump inner rotor

Limit: 0.15 mm (0.0059 in.)

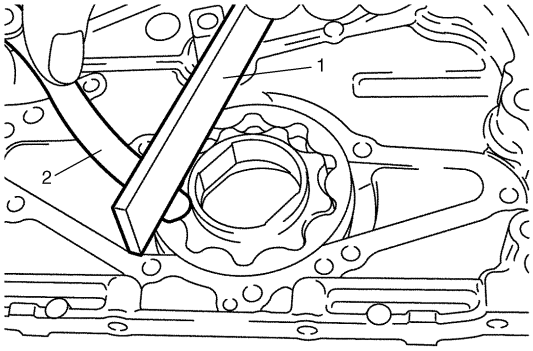

I2RH0B150027-01

Relief valve spring free length and load

Check relief valve spring free length and load as shown in the figure. If the measured valve spring length is lower than the specification, replace relief valve spring.

Relief valve spring free length and load

	Standard	Limit
Free length	52.4 mm (2.06 in.)	—
Load at spring length 38.5 mm (1.52 in.)	77 N (7.7 kgf, 17.0 lb)	69 N (6.9 kgf, 15.0 lb)

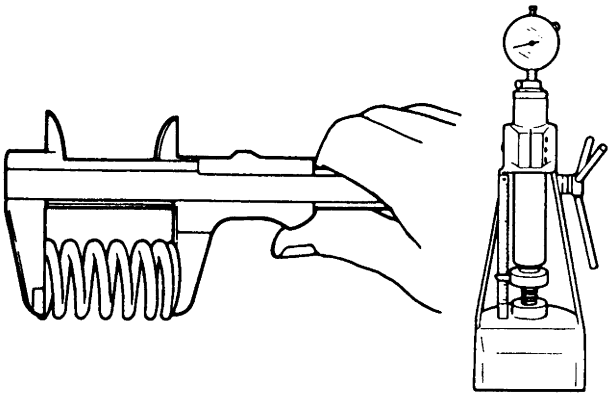

I2RH01150023-01

Specifications

Tightening Torque Specifications

S7RW0A1507001

Fastening part	Tightening torque			Note
	N·m	kgf-m	lb-ft	
Oil pressure switch	13	1.3	9.5	☞
Oil pump strainer bolt	11	1.1	8.0	☞
Oil pump strainer bracket bolt	11	1.1	8.0	☞
Oil pan bolt (M6)	11	1.1	8.0	☞
Oil pan bolt (M10)	55	5.5	40.0	☞
Oil pan nut	11	1.1	8.0	☞
Oil pan drain plug	35	3.5	25.5	☞
Transaxle stiffener bolt	55	5.5	40.0	☞
Clutch housing lower plate bolt	11	1.1	8.0	☞
Oil pump rotor plate bolt	11	1.1	8.0	☞

NOTE

The specified tightening torque is also described in the following.
“Oil Pan and Oil Pump Strainer Components”
“Oil Pump Components”

Reference:
For the tightening torque of fastener not specified in this section, refer to “Fasteners Information in Section 0A”.

Special Tools and Equipment

Recommended Service Material

S7RW0A1508001

Material	SUZUKI recommended product or Specification		Note
Sealant	SUZUKI Bond No.1217G	P/No.: 99000–31260	☞

NOTE

Required service material is also described in the following.
“Oil Pan and Oil Pump Strainer Components”
“Oil Pump Components”

Special Tool

S7RW0A1508002

09915–77310 Oil pressure gauge (0-10kg/cm2) ☞ 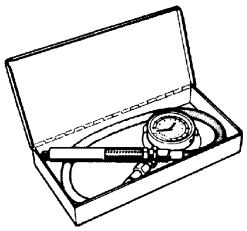	09915–78211 Oil pressure gauge attachment ☞ 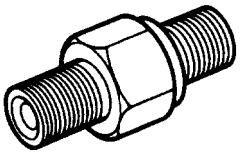

Engine Cooling System

General Description

Cooling System Description

S7RW0A1601001

The cooling system consists of the radiator cap, radiator, coolant reservoir, hoses, water pump, cooling fan and thermostat. The radiator is of tube-and-fin type.

Coolant Description

S7RW0A1601002

⚠ WARNING

- **Do not remove radiator cap to check engine coolant level; check coolant visually at the see-through coolant reservoir. Coolant should be added only to reservoir as necessary.**
- **As long as there is pressure in the cooling system, the temperature can be considerably higher than the boiling temperature of the solution in the radiator without causing the solution to boil. Removal of the radiator cap while engine is hot and pressure is high will cause the solution to boil instantaneously and possibly with explosive force, spewing the solution over engine, fenders and person removing cap. If the solution contains flammable anti-freeze such as alcohol (not recommended for use at any time), there is also the possibility of causing a serious fire.**
- **Check to make sure that engine coolant temperature is cold before removing any part of cooling system.**
- **Also be sure to disconnect negative cable from battery terminal before removing any part.**

The coolant recovery system is standard. The coolant in the radiator expands with heat, and the coolant is overflowed to the reservoir.
When the system cools down, the coolant is drawn back into the radiator.
The cooling system has been filled with a quality coolant that is a 50/50 mixture of water and ethylene glycol antifreeze.
This 50/50 mixture coolant solution provides freezing protection to –36 °C (–33 °F).

- Maintain cooling system freeze protection at –36 °C (–33 °F) to ensure protection against corrosion and loss of coolant from boiling. This should be done even if freezing temperatures are not expected.
- Add ethylene glycol base coolant when coolant has to be added because of coolant loss or to provide added protection against freezing at temperature lower than –36 °C (–33 °F).

NOTE

- **Alcohol or methanol base coolant or plain water alone should not be used in cooling system at any time as damage to cooling system could occur.**
- **Coolant must be mixed with demineralized water or distilled water.**

Anti-freeze proportioning table

		For M/T model	For A/T model
Freezing temperature	°C	–36	–36
	°F	–33	–33
Anti-freeze / Anti-corrosion coolant concentration	%	50	50
Ratio of compound to cooling water	ltr.	3.75/3.75	3.8/3.8
	US pt.	7.92/7.92	8.03/8.03
	Imp pt.	6.60/6.60	6.69/6.69

Coolant capacity

M/T:

- **Engine, radiator and heater: 6.8 liters (14.37/11.97 US/Imp pt.)**
- **Reservoir: 0.7 liters (1.48/1.23 us/Imp pt.)**
- **Total: 7.5 liters (15.85/13.20 US/Imp pt.)**

A/T:

- **Engine, radiator and heater: 6.9 liters (14.58/16.63 US/Imp pt.)**
- **Reservoir: 0.7 liters (1.48/1.23 us/Imp pt.)**
- **Total: 7.6 liters (16.06/13.38 US/Imp pt.)**

Schematic and Routing Diagram

Coolant Circulation

S7RW0A1602001

While the engine is warmed up (thermostat closed), coolant circulates as follows.

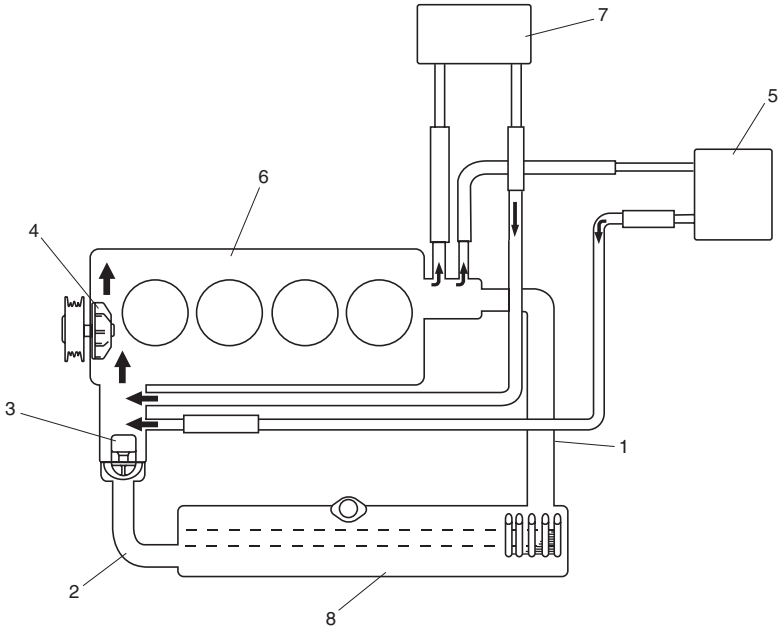

I5RW0C160001-02

1. Radiator inlet hose	3. Thermostat	5. Throttle body	7. Heater core
2. Radiator outlet hose	4. Water pump	6. Engine	8. Radiator

When coolant is warmed up to normal temperature and the thermostat opens, coolant passes through the radiator core to be cooled as follows.

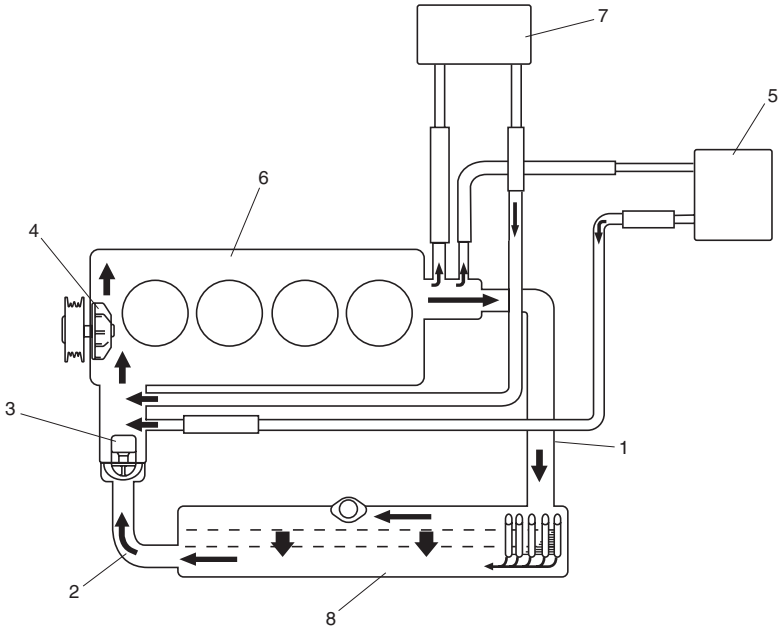

I5RW0C160002-02

1. Radiator inlet hose	3. Thermostat	5. Throttle body	7. Heater core
2. Radiator outlet hose	4. Water pump	6. Engine	8. Radiator

Diagnostic Information and Procedures

Engine Cooling Symptom Diagnosis

S7RW0A1604001

Condition	Possible cause	Correction / Reference Item
Engine overheats (Radiator fan operates)	Loose or broken water pump belt	*Adjust or replace.*
	Not enough coolant	*Check coolant level and add as necessary.*
	Faulty thermostat	*Replace.*
	Faulty water pump	*Replace.*
	Dirty or bent radiator fins	*Clean or remedy.*
	Coolant leakage on cooling system	*Repair.*
	Clogged radiator	*Check and replace radiator as necessary.*
	Faulty radiator cap	*Replace.*
	Dragging brakes	*Adjust brake.*
	Slipping clutch	*Replace.*
	Poor charge battery	*Check and replace as necessary.*
	Poor generation generator	*Check and repair.*
	ECT sensor faulty	*Check and replace as necessary.*
	Radiator fan motor faulty	*Check and replace as necessary.*
	ECM faulty	*Check and replace as necessary.*
	Wiring or grounding faulty	*Repair as necessary.*
	Equipped with too much electric load part(s)	*Dismount.*
Engine overheats (Radiator fan does not operate)	Fuse blown	*Check fuse of relay/fuse box and check for short circuit to ground.*
	Radiator cooling fan relay faulty	*Check and replace as necessary.*
	ECT sensor faulty	*Check and replace as necessary.*
	Radiator cooling fan motor faulty	*Check and replace as necessary.*
	Wiring or grounding faulty	*Repair as necessary.*
	ECM faulty	*Check and replace as necessary.*

Repair Instructions

Cooling System Components

S7RW0A1606001

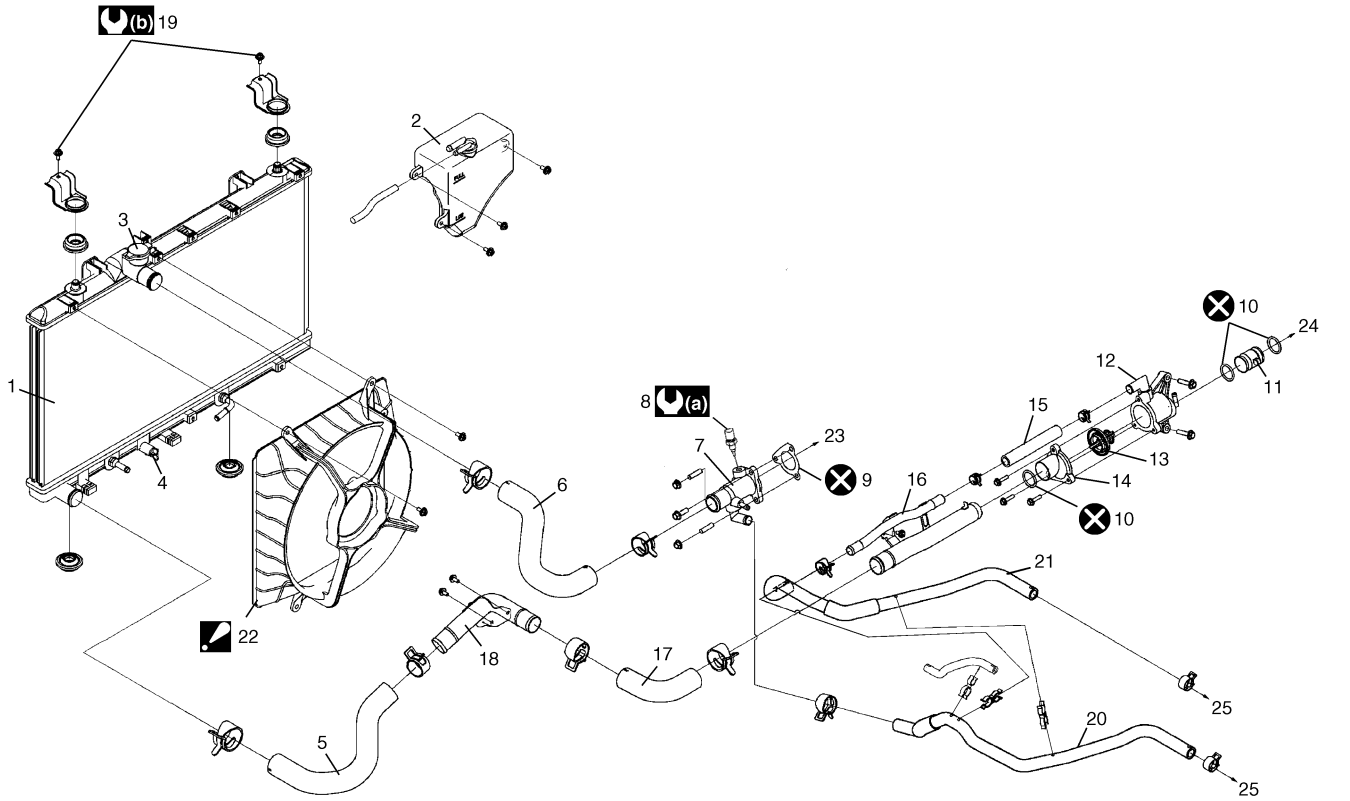

I5RW0C160012-01

1. Radiator	11. Thermostat case water outlet pipe	21. Heater outlet No.1 hose
2. Reservoir	12. Thermostat case	22. Radiator cooling fan assembly For disassembly and reassembly, refer to “Radiator Cooling Fan Disassembly and Reassembly”.
3. Radiator cap	13. Thermostat	23. To cylinder head
4. Drain plug	14. Thermostat cap	24. To water pump
5. Radiator outlet hose	15. Water bypass No.1 hose	25. To heater core
6. Radiator inlet hose	16. Water inlet No.1 pipe	(a) : 15 N·m (1.5 kgf-m, 11.0 lb-ft)
7. Water outlet cap	17. Water inlet hose	(b) : 33 N·m (3.3 kgf-m, 24.0 lb-ft)
8. ECT sensor	18. Water inlet No.2 pipe	: Do not reuse.
9. Water outlet cap gasket	19. Radiator support bracket bolt	
10. O-ring	20. Heater inlet hose	

Coolant Level Check

S7RW0A1606002

⚠ WARNING

To help avoid danger of being burned, do not remove radiator cap while engine and radiator are still hot. Scalding fluid and steam can be blown out under pressure if radiator cap is taken off too soon.

To check level, lift hood and look at “see-through” coolant reservoir.
It is not necessary to remove radiator cap to check coolant level.
When engine is cool, check coolant level in reservoir (1).
A normal coolant level should be between FULL mark (2) and LOW mark (3) on reservoir (1).
If coolant level is below LOW mark (3), remove reservoir cap (4) and add proper coolant to reservoir to bring coolant level up to FULL mark (2).

NOTE

If proper quality antifreeze is used, there is no need to add extra inhibitors or additives that claim to improve system. They may be harmful to proper operation of system, and are unnecessary expense.

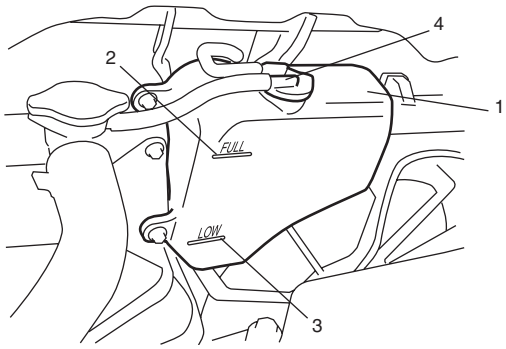

I6RW0B160006-01

Engine Cooling System Inspection and Cleaning

S7RW0A1606003

⚠ WARNING

To help avoid danger of being burned, do not remove radiator cap while engine and radiator are still hot. Scalding fluid and steam can be blown out under pressure if cap is taken off too soon.

1) Check cooling system for leakage or damage.
2) Wash radiator cap and filler neck with clean water by removing radiator cap when engine is cold.
3) Check coolant for proper level and freeze protection.
4) Using a pressure tester (1), check system and radiator cap (2) for proper pressure holding capacity. If replacement of cap is required, use a proper cap for this vehicle.

NOTE

After installing radiator cap to radiator, make sure that the ear of cap lines is parallel to radiator.

<u>Cooling system and radiator cap holding pressure (for inspection)</u>
110 kPa (1.1 kgf/cm^2, 15.6 psi)

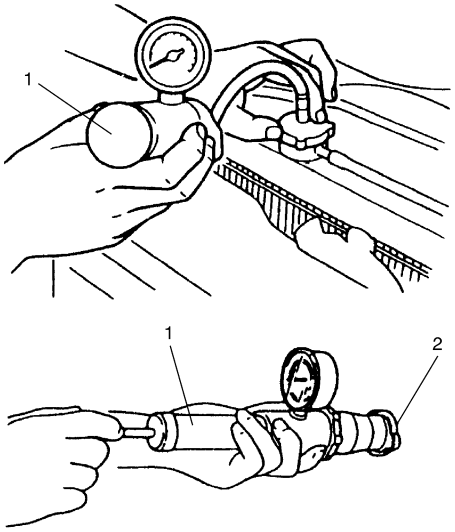

I5RH01160001-01

5) Tighten hose clamps and inspect all hoses. Replace hoses whenever cracked, swollen or otherwise deteriorated.
6) Clean frontal area of radiator core.

Cooling System Draining

S7RW0A1606004

⚠ WARNING

To help avoid danger of being burned, do not remove radiator cap while engine and radiator are still hot. Scalding fluid and steam can be blown out under pressure if cap is taken off too soon.

1) Remove radiator cap.
2) Drain coolant from radiator drain plug (1).
3) After draining coolant, be sure to tighten drain plug (1) securely.

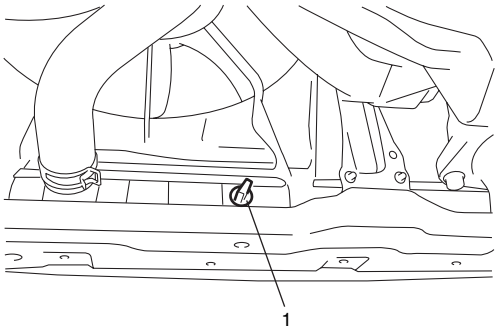

I4RS0A160003-01

Cooling System Flush and Refill

S7RW0A1606005

⚠ WARNING

To help avoid danger of being burned, do not remove radiator cap while engine and radiator are still hot. Scalding fluid and steam can be blown out under pressure if cap is taken off too soon.

NOTE

For detail of coolant specification, refer to "Coolant Description".

1) Remove radiator cap when engine is cool as follows.
   a) Turn cap counterclockwise slowly until it reaches a "stop" (Do not press down while turning it).
   b) Wait until pressure is relieved (indicated by a hissing sound) then press down on cap and continue to turn it counterclockwise.
2) With radiator cap removed, run engine until upper radiator hose is hot (this shows that thermostat is open and coolant is flowing through system).
3) Stop engine and drain coolant from radiator drain plug (1).
4) Close radiator drain plug. Add water until system is filled and run engine until upper radiator hose is hot again.
5) Repeat Steps 3) and 4) several times until drained liquid is nearly colorless.
6) Close radiator drain plug (1) tightly.

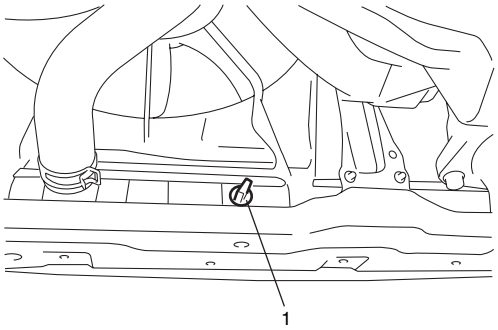

I4RS0A160003-01

7) Remove reservoir cap (2) and reservoir (1).
8) Pour out any fluid, scrub and clean inside of reservoir with soap and water.
   Flush it well with clean water and drain, Reinstall reservoir.
9) Fill reservoir with coolant up to "FULL" level mark (3).
10) Install reservoir cap (2) on reservoir.
11) Fill radiator with coolant up to bottom of radiator filler neck and install radiator cap, making sure that the ear of cap lines is parallel to radiator.
12) Run engine at idle speed.
13) Run engine until radiator fan motor is operated.
14) Stop engine and wait until engine comes cooled down to help avoid danger of being burned.
15) Add coolant to radiator up to bottom of radiator filler neck, and install radiator cap, making sure that the ear of cap lines is parallel to radiator.
16) Repeat Step 12) through 15).
17) Confirm that reservoir coolant level is "FULL" level mark (3). If coolant is insufficient, repeat Step 9) and 10).

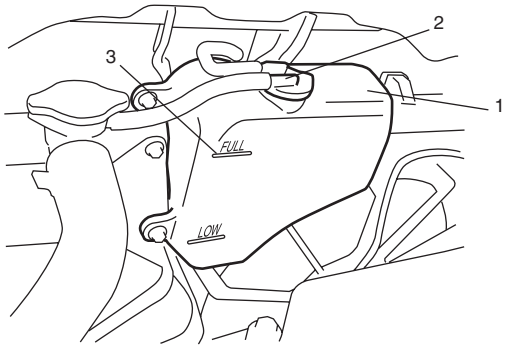

I6RW0D160001-01

Cooling Water Pipes or Hoses Removal and Installation

S7RW0A1606006

Removal

1) Drain coolant referring to "Cooling System Draining".
2) To remove these pipes or hoses, loosen clamp on each hose and pull hose end off.

Installation

Install removed parts in reverse order of removal procedure, noting the following.

- Tighten each clamp securely referring to "Cooling System Components".
- Refill cooling system referring to Step 7) to 17) of "Cooling System Flush and Refill".

Thermostat Removal and Installation

S7RW0A1606007

Removal

1) Drain coolant referring to “Cooling System Draining”.
2) Remove intake manifold referring to “Intake Manifold Removal and Installation in Section 1D”.
3) Disconnect water hose (1) and heater hose (2) from each pipe.
4) Remove thermostat case (3) with thermostat cap (4) and water inlet pipe (5).
5) Remove water inlet pipe with thermostat cap from thermostat case.
6) Remove thermostat from thermostat case (3).

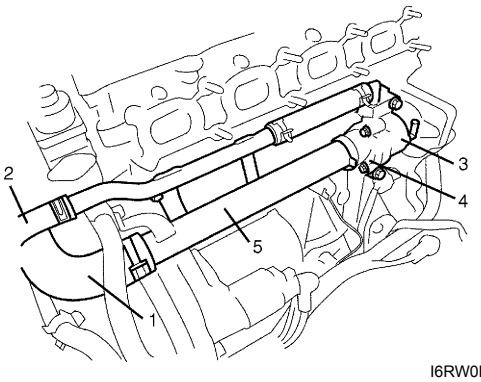

I6RW0B160007-01

Installation

Reverse removal procedure for installation noting the following points.

- Install thermostat (5) to thermostat case (2) by aligning air bleed valve (4) of thermostat with mark (3) of thermostat case and, then install thermostat cap (1) to thermostat case.

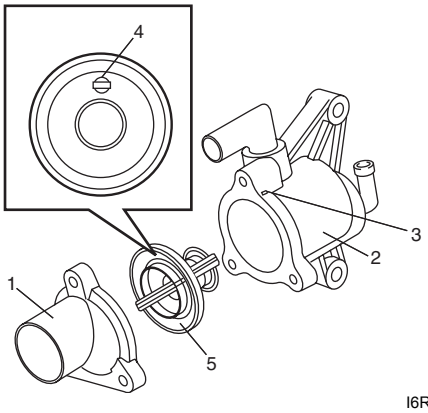

I6RW0B160008-01

- Use new O-rings when installing.
- Refill cooling system referring to Step 7) to 17) of “Cooling System Flush and Refill”.
- Verify that there is no coolant leakage at each connection.

Thermostat Inspection

S7RW0A1606008

- Make sure that air bleed valve (1) of thermostat is clean.
- Check to make sure that valve seat (2) is free from foreign matters which would prevent valve from seating tight.
- Check thermostat seal (3) for breakage, deterioration or any other damage.

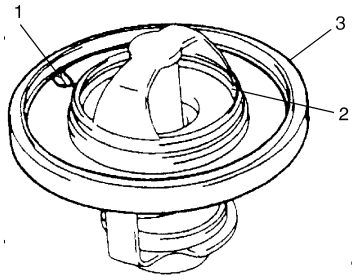

I3RM0A160008-01

- Check thermostatic movement of wax pellet as follows:
  a. Immerse thermostat (1) in water, and heat water gradually.
  b. Check that valve starts to open at specific temperature.

  Temperature at which valve begins to open
  80 – 84 °C (176 – 183 °F)

  Temperature at which valve become fully open
  95 – 97 °C (203 – 206 °F)

  Valve lift
  More than 8 mm (0.31 in.) at 95 °C (203 °F)

If valve starts to open at a temperature substantially below or above specific temperature, thermostat unit should be replaced with a new one. Such a unit, if reused, will bring about overcooling or overheating tendency.

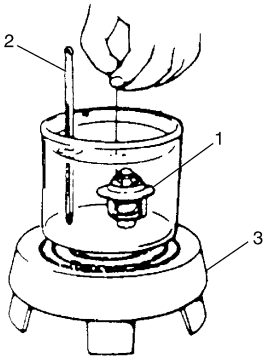

I2RH01160012-01

2. Thermometer	3. Heater

Radiator Cooling Fan Assembly On-Vehicle Inspection

S7RW0A1606009

1) Check continuity between terminals. If there is no continuity, replace radiator fan assembly.

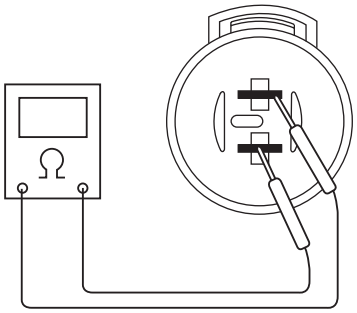

I5RW0A160004-01

2) Connect battery to radiator fan motor coupler as shown in figure, then check that the radiator fan motor operates smoothly. If radiator fan motor does not operate smoothly, replace radiator fan assembly.

Reference: Fan motor specified current at 12 V : 5.7 – 7.7 A

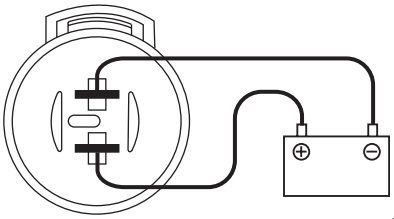

I5RW0A160005-01

Radiator Cooling Fan Relay Inspection

S7RW0A1606010

1) Disconnect negative (–) cable from battery.
2) Remove radiator cooling fan relay (1) from main fuse box.
3) Check that there is no continuity between terminal “c” and “d”. If there is continuity, replace relay.
4) Connect battery positive (+) terminal to terminal “b” of relay and battery negative (–) terminal to terminal “a” of relay, and then check continuity between terminal “c” and “d”. If there is no continuity, replace relay.

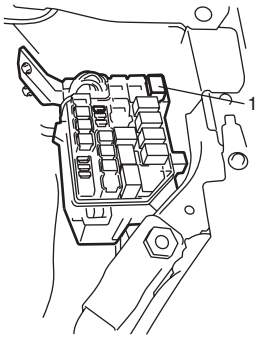

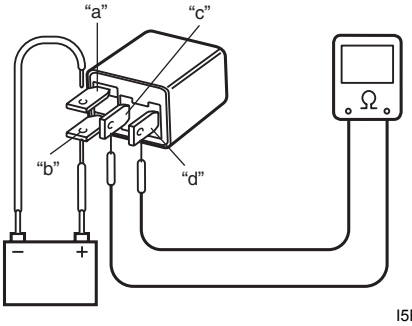

I5RW0A160008-02

Radiator Cooling Fan Assembly Removal and Installation

S7RW0A1606011

Removal

1) Disconnect negative (–) cable at battery.
2) Disconnect connector of cooling fan motor.
3) Drain coolant referring to “Cooling System Draining”.
4) Remove radiator inlet hose (1) and reservoir (2).

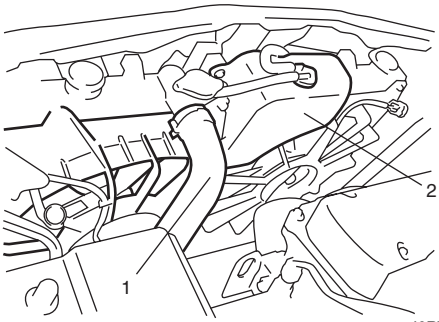

I6RW0B160004-02

5) Remove cooling fan mounting bolts (1).
6) Remove radiator cooling fan assembly (2).

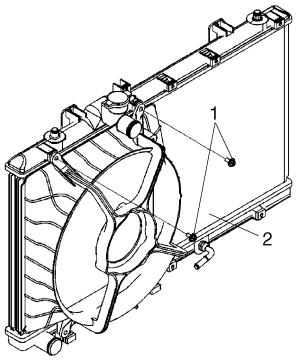

I5RW0C160014-01

Installation
Reverse removal procedure for installation noting the following.

- Refill cooling system referring to Step 7) to 17) of “Cooling System Flush and Refill”.
- After installation, verify there is no coolant leakage at each connection.

Radiator Cooling Fan Disassembly and Reassembly

S7RW0A1606012

Disassembly

1) Remove fan (1) from cooling fan motor (2).
2) Remove fan motor (2) from cooling fan guide (3).

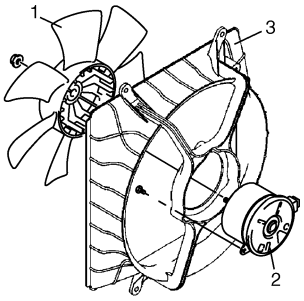

I5RW0C160005-01

Reassembly
Reverse disassembly procedures for reassembly.

Radiator On-Vehicle Inspection and Cleaning

S7RW0A1606013

Inspection
Check radiator for leakage or damage. Straighten bent fins, if any.

Cleaning
Clean frontal area of radiator cores.

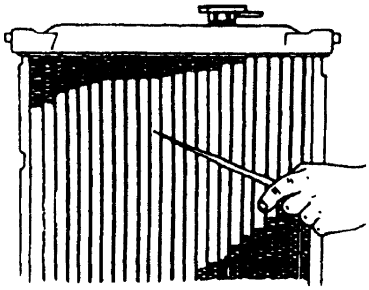

I2RH01160014-01

Radiator Removal and Installation

S7RW0A1606014

Removal

1) Disconnect negative cable at battery.
2) Drain coolant referring to “Cooling System Draining”.
3) Remove front bumper referring to “Front Bumper and Rear Bumper Components in Section 9K”.
4) Remove cooling fan assembly referring to “Radiator Cooling Fan Assembly Removal and Installation”.
5) Remove condenser fan referring to “Condenser Cooling Fan Removal and Installation: Manual Type in Section 7B”.
6) Remove radiator outlet hose from radiator.
7) Remove radiator from vehicle.

Installation
Reverse removal procedures, noting the following. Tighten radiator support bracket bolts to specified torque.

Tightening torque
Radiator support bracket bolt: 33 N·m (3.3 kgf-m, 24.0 lb-ft)

- Refill cooling system referring to Step 7) to 17) of “Cooling System Flush and Refill”.
- After installation, verify there is no coolant leakage each connection.

Water Pump / Generator Drive Belt Tension Inspection and Adjustment

S7RW0A1606015

⚠ WARNING

- **Disconnect negative cable at battery before checking and adjusting belt tension.**
- **To help avoid danger of being burned, do not remove radiator cap while engine and radiator are still hot. Scalding fluid and steam can be blown out under pressure if cap is taken off too soon.**

1) Inspect belt for cracks, cuts, deformation, wear and cleanliness. If it is necessary to replace belt, refer to “Water Pump / Generator Drive Belt Removal and Installation”.
2) Check belt for tension. Belt is in proper tension when it deflects the following specification under thumb pressure (about 100 N (10kgf, 22 lbs.).
   If belt tension is out of specification, go to next steps.

   Water pump / generator drive belt tension
   “a”: 4.5 – 5.5 mm (0.18 – 0.22 in.) as deflection / 100 N (10kgf, 22lbs)

   NOTE

   When replacing belt with a new one, adjust belt tension to 4.0 – 4.5 mm (0.16 – 0.18 in.).

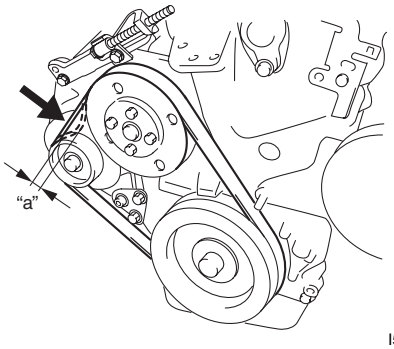

I5RW0C160006-01

3) After loosening generator bracket bolts (2) and pivot bolt (3), adjust belt tension to specification described at step 2) by loosening / tightening generator adjust bolt (1).
4) Tighten generator bracket bolts and pivot bolt as specified torque.

   Tightening torque
   Generator bracket bolt (a): 25 N·m (2.5 kgf-m, 18.0 lb-ft)
   Generator pivot bolt (b): 50 N·m (5.0 kgf-m, 36.0 lb-ft)
5) Check belt tension for specification after turning crankshaft two rotations clockwise.
6) Tighten generator adjusting bolt (1) as specified torque.

   Tightening torque
   Generator adjusting bolt (c): Tighten 7.0 N·m (0.7 kgf-m, 5.0 lb-ft) by the specified procedure.

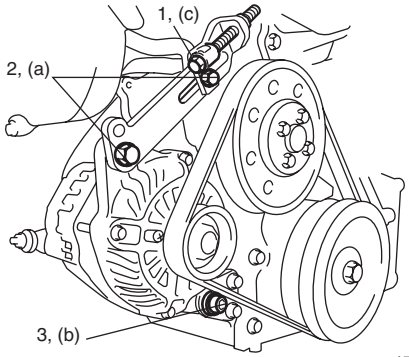

I5RW0C160007-01

7) Connect negative cable at battery.

Water Pump / Generator Drive Belt Removal and Installation

S7RW0A1606016

Removal

1) Disconnect negative cable at battery.
2) If vehicle equipped with A/C, remove compressor drive belt before removing water pump belt (1). Refer to “Compressor Drive Belt Removal and Installation: Manual Type in Section 7B” or “Compressor Drive Belt Removal and Installation: Automatic Type in Section 7B”.
3) Loosen generator bracket bolts (2) and generator pivot bolt (3).
4) Loosen generator adjusting bolt (4), and then remove water pump belt.

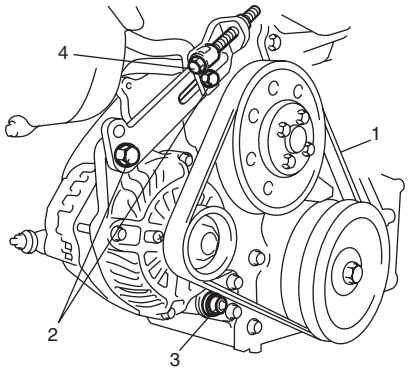

I5RW0C160008-01

Installation

1) Install belt (1) to water pump pulley (2), crankshaft pulley (3) and generator pulley (4).
2) Adjust belt tension referring to “Water Pump / Generator Drive Belt Tension Inspection and Adjustment”.
3) If vehicle equipped with A/C, install compressor drive belt referring to “Compressor Drive Belt Removal and Installation: Manual Type in Section 7B” or “Compressor Drive Belt Removal and Installation: Automatic Type in Section 7B”.

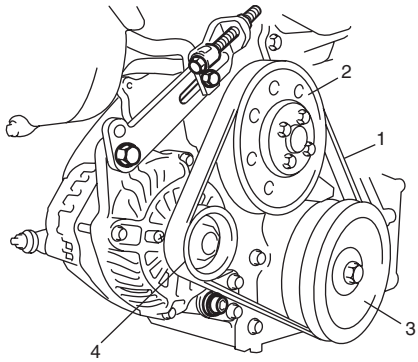

I5RW0C160009-01

4) Connect negative cable at battery.

Water Pump Removal and Installation

S7RW0A1606017

Removal

1) Disconnect negative cable at battery.
2) Drain coolant.
3) Remove water pump / generator drive belt referring to “Water Pump / Generator Drive Belt Removal and Installation”.
4) Remove water pump pulley.
5) Remove water pump assembly (1).

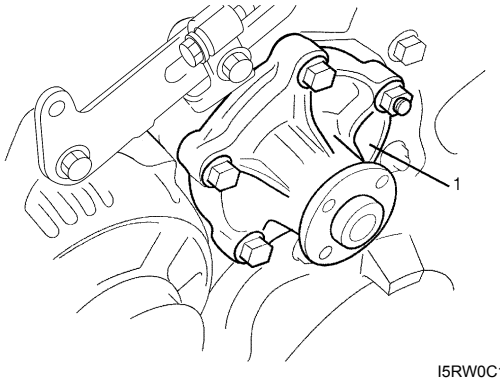

I5RW0C160011-01

Installation

1) Apply sealant to mating surface of water pump (1) as shown in figure.

“A”: Water tight sealant 99000–31250 (SUZUKI Bond No.1207F)

<u>Sealant quantity (to mating surface of water pump)</u>
Width “a”: 3 mm (0.12 in.)
Height “b”: 2 mm (0.08 in.)

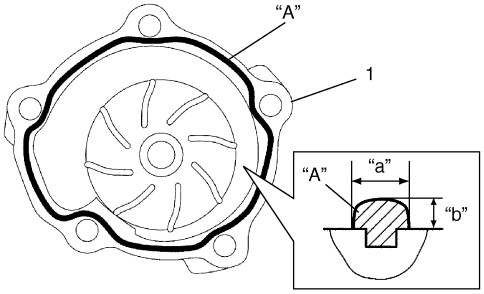

I3RM0A160016-01

2) Install water pump assembly (1) to cylinder block and tighten bolts and nut to specified torque.

Tightening torque
Water pump bolt and nut (a): 25 N·m (2.5 kgf-m, 18.0 lb-ft)

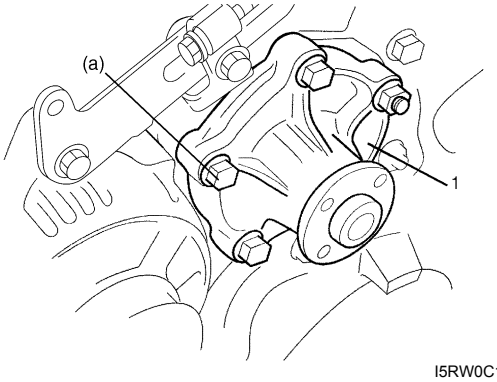

I5RW0C160010-01

3) Install water pump pulley.
4) Install water pump / generator drive belt referring to “Water Pump / Generator Drive Belt Removal and Installation”.
5) Install A/C compressor belt referring to “Compressor Drive Belt Removal and Installation: Manual Type in Section 7B” or “Compressor Drive Belt Removal and Installation: Automatic Type in Section 7B”.
6) Refill cooling system referring to Step 7) to 17) of “Cooling System Flush and Refill”.
7) Connect negative cable at battery.
8) Check each part for leakage.

Water Pump Inspection

S7RW0A1606018

⚠ CAUTION

Do not disassemble water pump.
If any repair is required on pump, replace it as assembly.

Rotate water pump by hand to check for smooth operation. If pump does not rotate smoothly or makes abnormal noise, replace it.

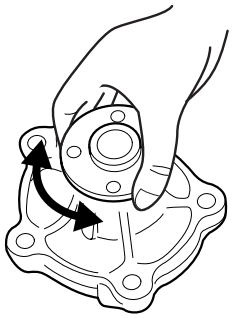

I2RH0B160019-01

Specifications

Tightening Torque Specifications

S7RW0A1607001

Fastening part	Tightening torque			Note
	N·m	kgf-m	lb-ft	
Radiator support bracket bolt	33	3.3	24.0	☞
Generator bracket bolt	25	2.5	18.0	☞
Generator pivot bolt	50	5.0	36.0	☞
Generator adjusting bolt	Tighten 7.0 N·m (0.7 kgf-m, 5.0 lb-ft) by the specified procedure.			☞
Water pump bolt and nut	25	2.5	18.0	☞

NOTE

The specified tightening torque is also described in the following.
“Cooling System Components”

Reference:
For the tightening torque of fastener not specified in this section, refer to “Fasteners Information in Section 0A”.

Special Tools and Equipment

Recommended Service Material

S7RW0A1608001

Material	SUZUKI recommended product or Specification		Note
Water tight sealant	SUZUKI Bond No.1207F	P/No.: 99000–31250	☞

Fuel System

Precautions

Precautions on Fuel System Service

S7RW0A1700001

⚠ WARNING

Before attempting service of any type on fuel system, the following should be always observed in order to reduce the risk of fire and personal injury.

- **Disconnect negative cable at battery.**
- **Do not smoke, and place no smoking signs near work area.**
- **Be sure to have CO_2 fire extinguisher handy.**
- **Be sure to perform work in a well-ventilated area and away from any open flames (such as gas hot heater).**
- **Wear safety glasses.**
- **To relieve fuel vapor pressure in fuel tank, remove fuel filler cap from fuel filler neck and then reinstall it.**
- **As fuel feed line is still under high fuel pressure even after stopping engine, loosening or disconnecting fuel feed line directly may cause dangerous spout of fuel. Before loosening or disconnecting fuel feed line, make sure to relieve fuel pressure referring to "Fuel Pressure Relief Procedure".**
- **A small amount of fuel may be released when the fuel line is disconnected. In order to reduce the risk of personal injury, cover a shop cloth to the fitting to be disconnected. Be sure to put that cloth in an approved container after disconnecting.**
- **Never run engine with fuel pump relay disconnected when engine and exhaust system are hot.**
- **Note that fuel hose connection varies with each type of pipe. Be sure to connect and clamp each hose correctly referring to "Fuel Hose Disconnecting and Reconnecting".**
  After connecting, make sure that it has no twist or kink.
- **When installing injector or fuel feed pipe, lubricate its O-ring with gasoline.**
- **When servicing the fuel tank, it should be treated with respect, with no contact with sharp edges or hot surfaces. In addition, the fuel tank should not be dropped since fuel tank, fuel pump and other components can be damaged by the impact. If dropped, all components should be replaced because there is a risk of damage.**
- **The fuel tank is made of resin.**
  Be sure not to allow solvent (chemical article such as grease and sealant) to attach to the fuel tank as some chemical reaction may occur, causing the fuel tank to be swollen, hardened or distorted leakage and resulting in fuel leakage from the fuel tank.

General Description

Fuel System Description

S7RW0A1701001

⚠ **CAUTION**

This engine requires the unleaded fuel only. The leaded and/or low lead fuel can result in engine damage and reduce the effectiveness of the emission control system.

The main components of the fuel system are fuel tank, fuel pump assembly (with fuel filter, fuel level gauge, fuel pressure regulator), fuel feed line and fuel vapor line.
For the details of fuel flow, refer to “Fuel Delivery System Diagram”.

Fuel Delivery System Description

S7RW0A1701002

The fuel delivery system consists of the fuel tank, fuel pump assembly (with built-in fuel filter and fuel pressure regulator), delivery pipe, injectors and fuel feed line.
The fuel in the fuel tank is pumped up by the fuel pump, sent into delivery pipe and injected by the injectors.
As the fuel pump assembly is equipped with built-in fuel filter and fuel pressure regulator, the fuel is filtered and its pressure is regulated before being sent to the feed pipe.
The excess fuel at fuel pressure regulation process is returned back into the fuel tank.
Also, fuel vapor generated in fuel tank is led through the fuel vapor line into the EVAP canister.
For system diagram, refer to “Fuel Delivery System Diagram”.

Fuel Pump Description

S7RW0A1701003

The fuel pump (1) is an in-tank type electric pump.
Incorporated in the pump assembly are;
a fuel filter (2), a fuel pressure regulator (3) and a fuel level sensor (gauge) (4).

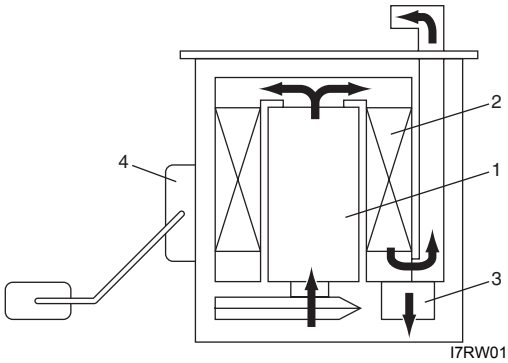

I7RW01170001-01

Schematic and Routing Diagram

Fuel Delivery System Diagram

S7RW0A1702001

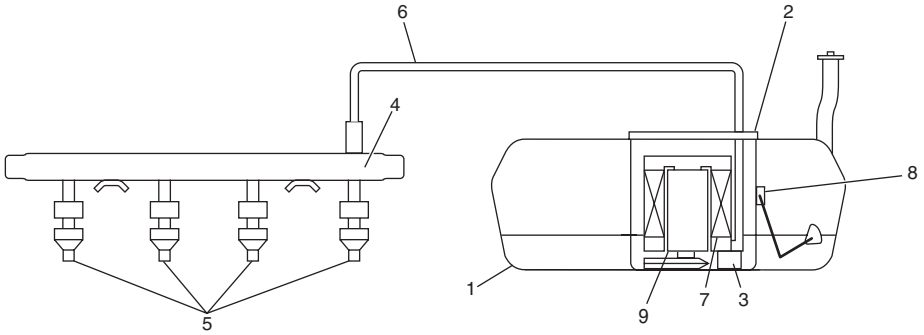

I7RW01170002-02

1. Fuel tank	4. Delivery pipe	7. Fuel filter
2. Fuel pump assembly	5. Fuel injector	8. Fuel level sensor (gauge)
3. Fuel pressure regulator	6. Fuel feed line	9. Fuel pump

Diagnostic Information and Procedures

Fuel Pressure Inspection

S7RW0A1704001

⚠ WARNING

Before starting the following procedure, be sure to observe “Precautions on Fuel System Service” in order to reduce the risk of fire and personal injury.

1) Relieve fuel pressure in fuel feed line referring to “Fuel Pressure Relief Procedure”.
2) Disconnect fuel feed hose from fuel delivery pipe.
3) Connect special tools and hose between fuel feed hose (1) and fuel delivery pipe as shown in figure, and clamp hoses securely in order to ensure that no leaks occur during checking.

Special tool
(A): 09912–58442
(B): 09912–58432
(C): 09912–58490

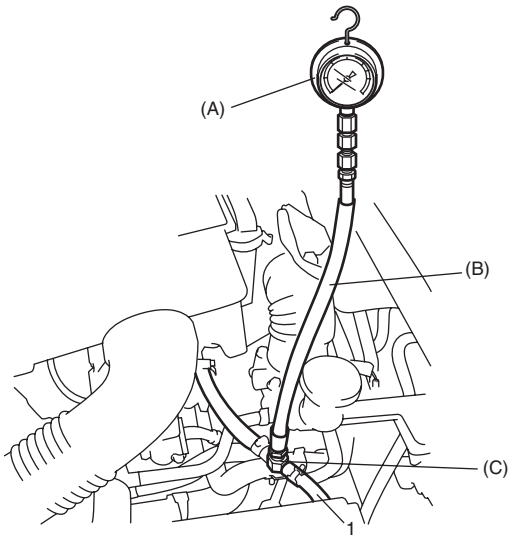

I5RW0A170002-02

4) Check that battery voltage is 11 V or more.
5) Measure fuel pressure at each condition.
   If measured pressure is out of specification, refer to "Fuel Pressure Check in Section 1A" and check each possibly defective part. Replace if found defective.
   a) Turn ignition switch ON to operate fuel pump and after 2 seconds turn it OFF. Repeat this 3 or 4 times and then check fuel pressure.

      Fuel pressure specification
      With fuel pump operating and engine stopped: 360 – 400 kPa (3.6 – 4.0 kgf/cm^2, 51.2 – 56.9 psi)

   b) Start engine and warm it up to normal operating temperature, and measure fuel pressure at idling.

      Fuel pressure specification
      At specified idle speed: 360 – 400 kPa (3.6 – 4.0 kgf/cm^2, 51.2 – 56.9 psi)

   c) Stop engine, and measure fuel pressure at one minute after stopping.

      Fuel pressure specification
      With 1 min. after engine (fuel pump) stop (Pressure reduces as time passes): Over 250 kPa (2.5 kgf/cm^2, 35.6 psi)

6) After checking fuel pressure, remove fuel pressure gauge.

⚠ WARNING

As fuel feed line is still under high fuel pressure, make sure to release fuel pressure according to the following procedures.

- **Place fuel container under joint.**
- **Cover joint with rag (1) and loosen joint nut slowly in order to release fuel pressure gradually.**

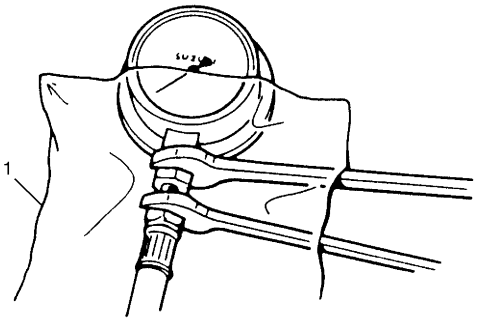

I5RW0A170003-01

7) Remove special tools from fuel delivery pipe and fuel feed hose.
8) Connect fuel feed hose to fuel delivery pipe and clamp it securely.
9) With engine OFF and ignition switch ON, check for fuel leaks.

Fuel Cut Operation Inspection

S7RW0A1704002

NOTE

Before inspection, make sure that gear shift lever is in neutral position (shift select lever is "P" range for A/T vehicle), A/C is OFF and parking brake lever is pulled all the way up.

1) Warm engine up to normal operating temperature.
2) While listening to sound of injector (2) by using sound scope (1) or such, increase engine speed to higher than 3,000 r/min.

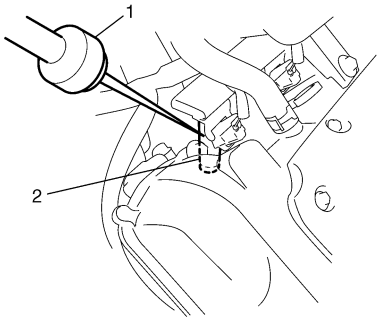

I2RH0B170004-01

3) Check to make sure that injector operation sound is stop when throttle valve is closed instantly and it is heard again when engine speed is reduced to approx. 2,000 r/min or less.

Repair Instructions

Fuel System Components

S7RW0A1706001

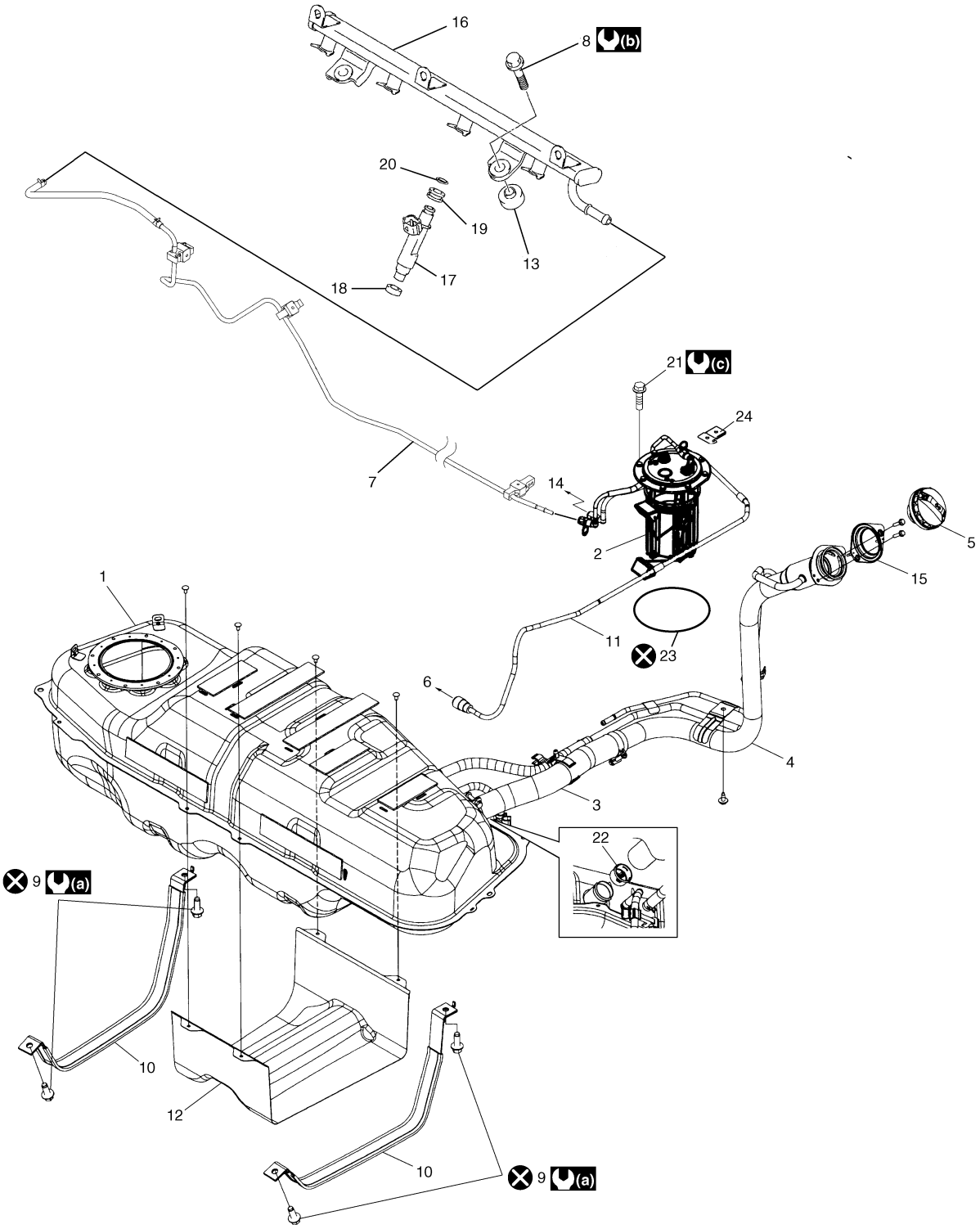

I6RW0D170001-01

1. Fuel tank	11. Fuel vapor line	21. Fuel pump bolt
2. Fuel pump assembly	12. Fuel tank protector	22. Fuel tank inlet valve
3. Fuel tank filler hose	13. Insulator	23. Fuel pump gasket
4. Fuel tank filler neck	14. To EVAP canister purge valve	24. Earth bracket
5. Fuel filler cap	15. Fuel filler packing	(a) : 45 N·m (4.5 kgf-m, 33.0 lb-ft)
6. To EVAP canister	16. Delivery pipe	(b) : 25 N·m (2.5 kgf-m, 18.0 lb-ft)
7. Fuel feed line	17. Fuel injector	(c) : 11 N·m (1.1 kgf-m, 8.0 lb-ft)
8. Delivery pipe bolt	18. Cushion	⊗ : Do not reuse.

9. Fuel tank bolt	19. Grommet	
10. Fuel tank belt	20. O-ring	

Fuel Hose Disconnecting and Reconnecting

S7RW0A1706002

⚠ WARNING

Before starting the following procedure, be sure to observe "Precautions on Fuel System Service" in order to reduce the risk of fire and personal injury.

For Connection Other Than Quick Joint

- Clamp around fuel tank

NOTE

Be sure to install hose to spool of pipe surely.

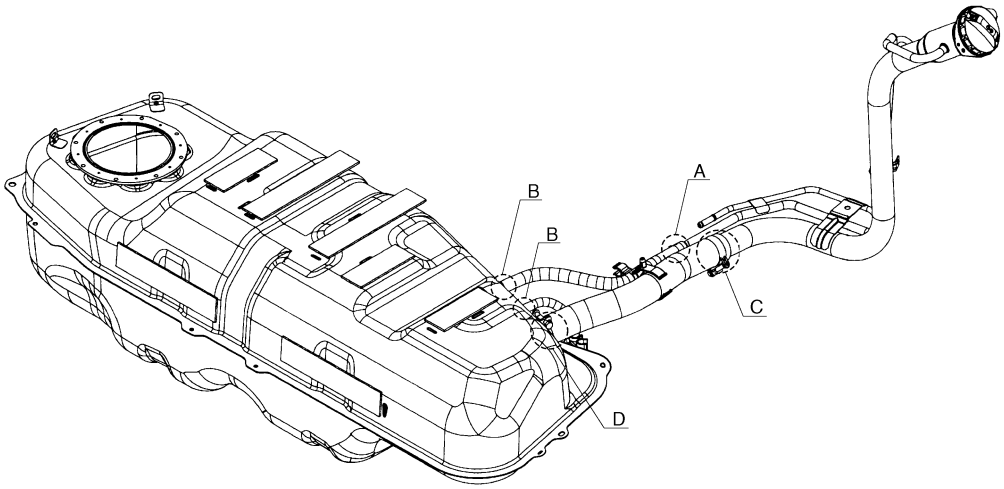

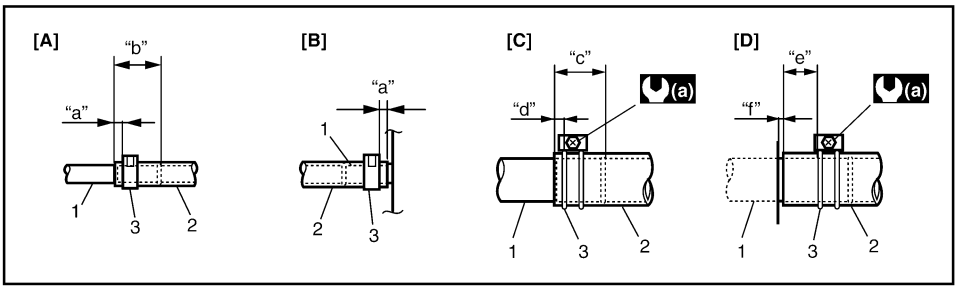

I7RW01170005-01

[A]: Connection A	"b": 30 mm (1.18 in.)	1. Pipe
[B]: Connection B	"c": 38 mm (1.50 in.)	2. Hose
[C]: Connection C	"d": 5 – 12 mm (0.20 – 0.48 in.)	3. Clamp
[D]: Connection D	"e": 7 – 14 mm (0.28 – 0.55 in.)	(a) : 1.5 N·m (0.15 kgf-m, 1.0 lb-ft)
"a": 3 – 7 mm (0.12 – 0.28 in.)	"f": 2 mm (0.08 in.)	

Clamp other than around fuel tank

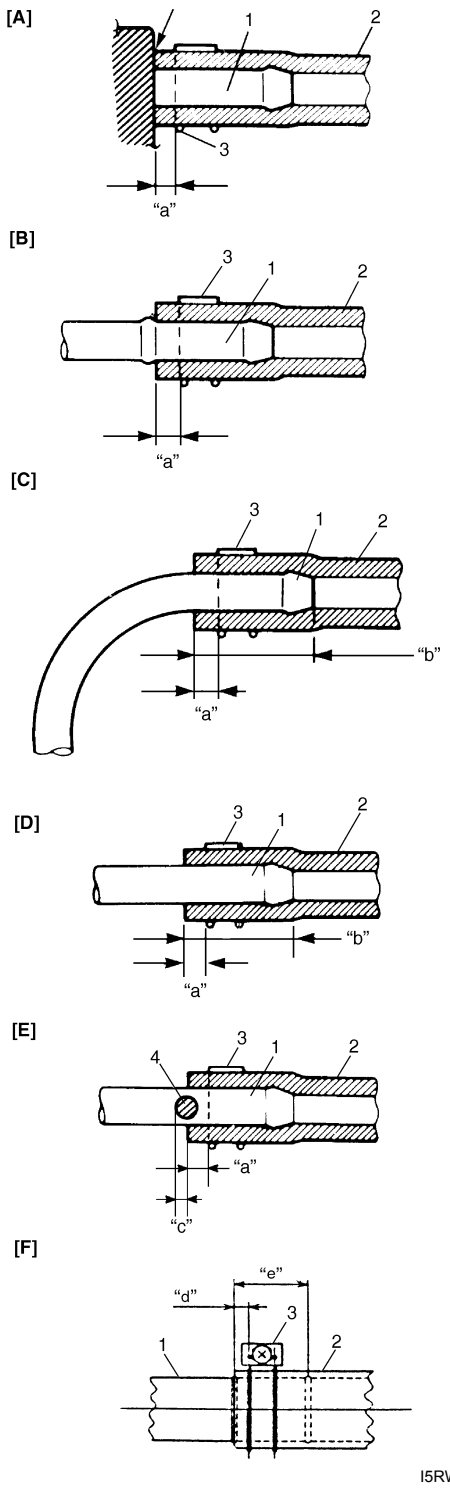

I5RW0A170006-01

[A]:	With short pipe, fit hose as far as it reaches pipe joint as shown.
[B]:	With the following type pipe, fit hose as far as its peripheral projection as shown.
[C]:	With bent pipe, fit hose as its bent part as shown or till depth "b".
[D]:	With straight pipe, fit hose till depth "b".
[E]:	With red marked pipe, fit hose end reaches red mark on pipe.
[F]:	For fuel tank filler hose, insert it to spool or welding-bead.
"a":	Clamp securely at a position 3 – 7 mm (0.12 – 0.27 in.) from hose end.
"b":	20 – 30 mm (0.79 – 1.18 in.)
"c":	0 – 5 mm (0 – 0.19 in.)
"d":	5 – 12 mm (0.2 – 0.47 in.)
"e":	38 mm (1.50 in.)

4.	Red mark

For Quick Joint Disconnecting

1) Remove mud, dust and/or foreign material between pipe (1) and quick joint (fuel pipe) (2) by blowing compressed air.
2) Unlock joint lock by inserting special tool between pipe and quick joint.

   Special tool
   (A): 09919–47020

3) Disconnect quick joint from pipe.

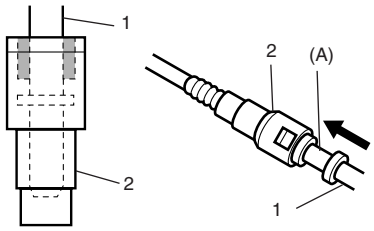

I4RS0A170019-01

Reconnecting

Insert quick joint (fuel pipe) to fuel pipe until they lock securely (a click is heard), and confirm that quick joint (fuel pipe) is not disconnected by hand.

Fuel Pressure Relief Procedure

S7RW0A1706003

⚠ CAUTION

This work must not be done when engine is hot. If done so, it may cause adverse effect to catalyst.

NOTE

If ECM detects DTC(s) after servicing, clear DTC(s) referring to "DTC Clearance in Section 1A".

1) Make sure that engine is cold.
2) Shift transaxle gear shift lever in "Neutral" (shift select lever in "P" range for A/T model), set parking brake and block drive wheels.
3) Remove relay / fuse box cover.
4) Disconnect fuel pump relay (1) from relay / fuse box (2).
5) Remove fuel filler cap in order to release fuel vapor pressure in fuel tank, and then reinstall it.

6) Start engine and run it until engine stops for lack of fuel. Repeat cranking engine 2 – 3 times for about 3 seconds each time in order to dissipate fuel pressure in lines. Fuel connections are now safe for servicing.
7) After servicing, connect fuel pump relay (1) to relay / fuse box and install relay / fuse box cover.

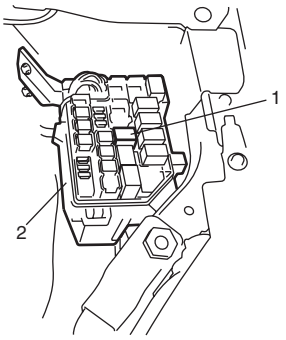

I5RW0A170007-01

Fuel Leakage Check Procedure

S7RW0A1706004

After performing any service on fuel system, check to make sure that there are no fuel leakages as follows.

1) Turn ON ignition switch for 3 seconds (to operate fuel pump) and then turn it OFF.
   Repeat this (ON and OFF) 3 or 4 times and apply fuel pressure to fuel line until fuel pressure is felt by hand placed on fuel feed hose.
2) In this state, check to see that there are no fuel leakages from any part of fuel system.

Fuel Lines On-Vehicle Inspection

S7RW0A1706005

⚠ CAUTION

Due to the fact that fuel feed line (1) is under high pressure, use special care when servicing it.

Visually inspect fuel lines for evidence of fuel leakage, hose crack and deterioration or damage.
Make sure all clamps are secure.
Replace parts as needed.

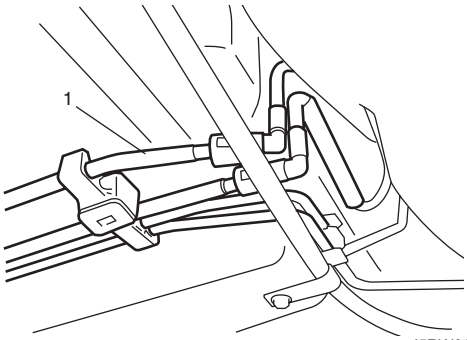

I5RW0A170008-01

Fuel Pipe Removal and Installation

S7RW0A1706006

⚠ WARNING

Before starting the following procedure, be sure to observe “Precautions on Fuel System Service” in order to reduce the risk of fire and personal injury.

Removal

1) Relieve fuel pressure in fuel feed line according to “Fuel Pressure Relief Procedure”.
2) Disconnect negative cable at battery.
3) Disconnect fuel hose (3) from fuel pipe (2) at the front and rear of each fuel pipe referring to “Fuel Hose Disconnecting and Reconnecting”.
4) Mark the location of clamps (1) on fuel pipes (2), so that the clamps can be reinstalled to where they were.
5) Remove clamps (1) from vehicle body, fuel pipes and brake pipes.

⚠ CAUTION

Be careful not to bent and damage fuel pipes and brake pipes when removing clamp.

6) Remove fuel pipe (2).

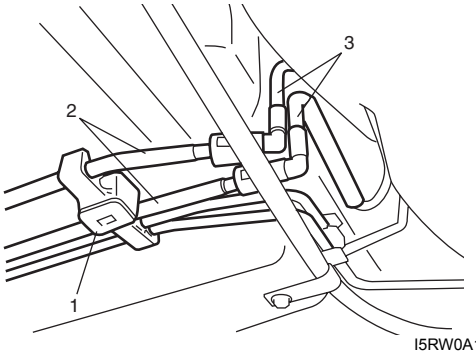

I5RW0A170009-01

Installation

1) Install clamps to marked location on pipes. If clamp is deformed, its claw is bent or broken, replace it with new one.
2) Install pipes with pipe clamps to vehicle.
3) Connect fuel hoses and pipes to each pipe referring to “Fuel Hose Disconnecting and Reconnecting”.
4) Connect negative cable at battery.
5) With engine OFF, turn ignition switch to ON position and check for fuel leaks.

Fuel Injector On-Vehicle Inspection

S7RW0A1706007

1) Using sound scope (1) or such, check operating sound of injector (2) when engine is running or cranking.
   Cycle of operating sound should vary according to engine speed.
   If no sound or an unusual sound is heard, check injector circuit (wire or coupler) or injector.

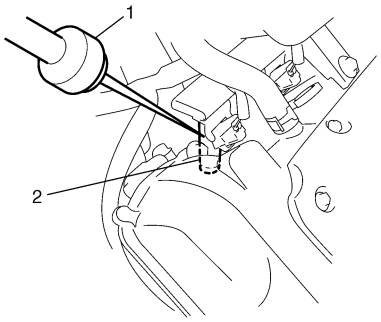

I2RH0B170007-01

2) Disconnect connector (1) from injector, connect ohmmeter between terminals of injector and check resistance.
   If resistance is out of reference value greatly, replace.

   Reference resistance of fuel injector
   12.0 Ω at 20 °C, 68 °F

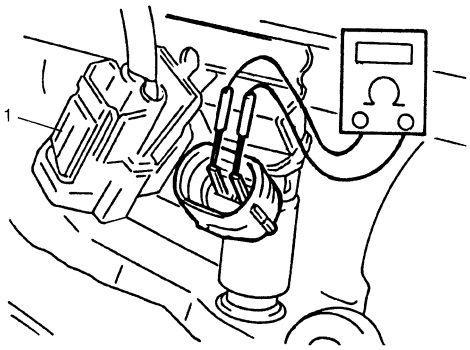

I2RH0B170008-01

3) Connect connector to injector securely.

Fuel Injector Removal and Installation

S7RW0A1706008

⚠ WARNING

Before starting the following procedure, be sure to observe "Precautions on Fuel System Service" in order to reduce the risk of fire and personal injury.

Removal

1) Relieve fuel pressure according to "Fuel Pressure Relief Procedure".
2) Disconnect negative cable at battery.
3) Remove air cleaner case (1) and air suction hose (2).

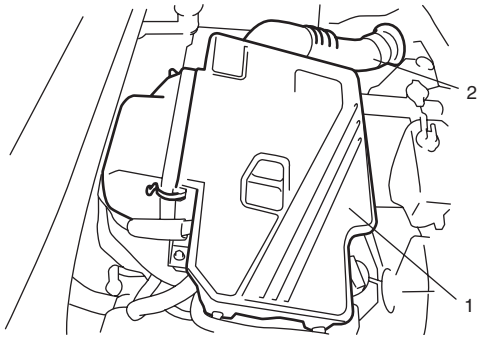

I5RW0A140002-01

4) Disconnect fuel injector couplers.
5) Disconnect fuel feed hose (4) from fuel delivery pipe (1).
6) Remove fuel delivery pipe bolts (2).
7) Remove fuel injector(s) (3).

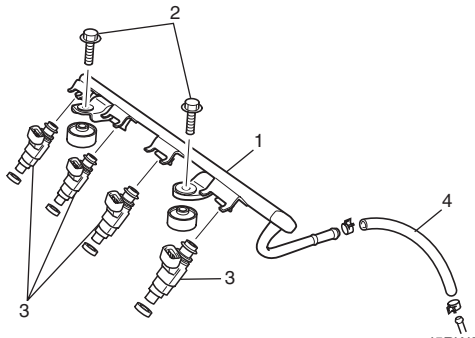

I5RW0A170010-01

Installation

Reverse removal procedure for installation noting the following.

- Replace injector O-ring (1) with new one using care not to damage it.
- Check if cushion (2) is scored or damaged. If it is, replace with new one.
- Apply thin coat of fuel to O-rings (1), and then install injectors (3) into delivery pipe (4) and cylinder head. Make sure that injectors rotate smoothly (6). If not, probable cause is incorrect installation of O-ring. Replace O-ring with new one.
- Tighten delivery pipe bolts (5) to specified torque and make sure that injectors rotate smoothly.

Tightening torque
Fuel delivery pipe bolt (a): 25 N·m (2.5 kgf-m, 18.0 lb-ft)

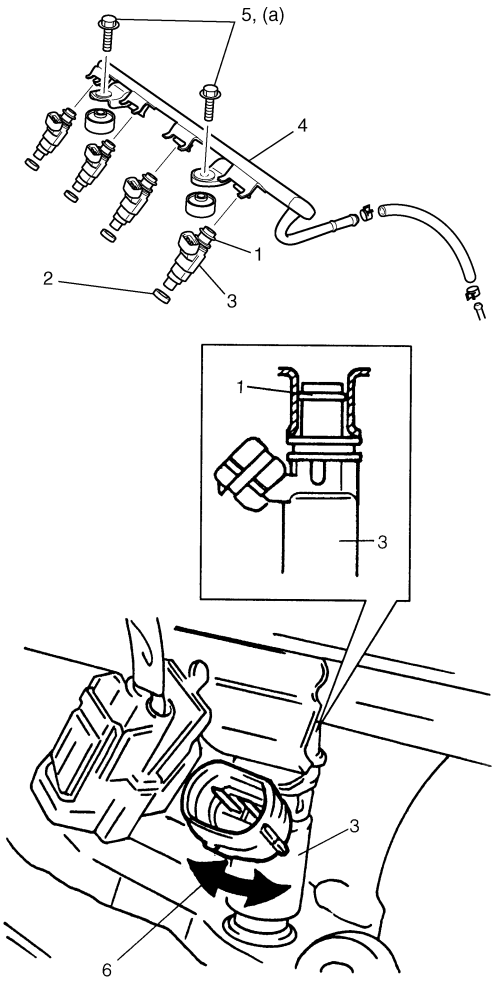

I3RM0A170011-01

- After installation, with engine OFF and ignition switch ON, check for fuel leaks around fuel line connection.

Fuel Injector Inspection

S7RW0A1706009

⚠ WARNING

- **Before starting the following procedure, be sure to observe "Precautions on Fuel System Service" in order to reduce the risk of fire and personal injury.**
- **Put injector and battery as far away as possible in order to reduce risk of fire and personal injury when connecting/ disconnecting test lead to/from battery.**

1) Relieve fuel pressure according to "Fuel Pressure Relief Procedure" if equipped.
2) Disconnect fuel feed hose from delivery pipe.
3) Set special tools as follows.

Special tool
(A): 09912–58421
(B): 09930–88530
(C): 09912–57610

a) Fit washer (1) (inside diameter 13.5 – 14.5 mm(0.532 – 0.570 in.)) to injector (2), and then install injector to special tool (A).
b) Connect special tool (B) to injector.
c) Install special tool (C) to special tool (A).
d) Connect fuel feed hose to special tool (A).

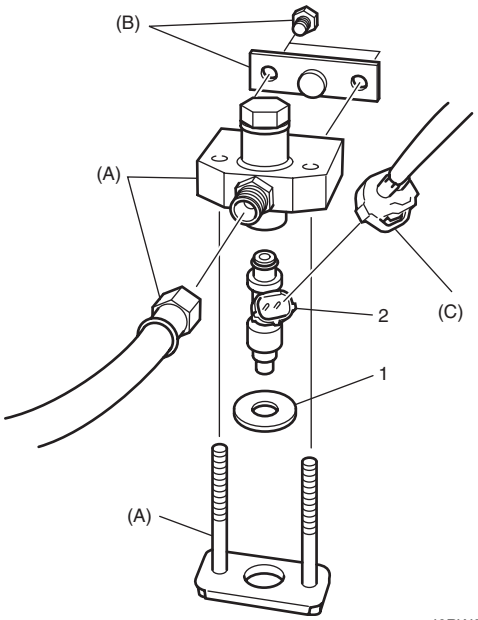

I6RW0B170014-01

4) Install suitable vinyl tube onto injector nozzle to prevent fuel from splashing out when injecting.
5) Put graduated cylinder under injector.
6) Operate fuel pump and apply fuel pressure to injector as follows:
   a) When using scan tool:
      i) Connect scan tool to DLC with ignition switch OFF.
      ii) Turn ignition switch ON, clear DTC and select “MISC TEST” mode on scan tool.
      iii) Turn fuel pump ON by using scan tool.

      Special tool
      (A): SUZUKI scan tool (SUZUKI-SDT)

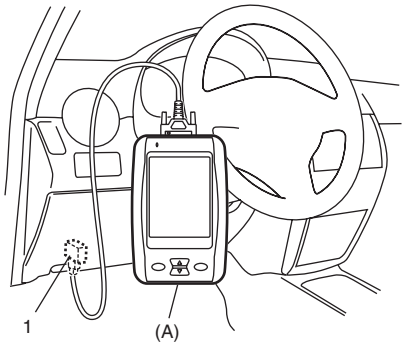

I5RW0C110011-01

   b) When not using scan tool:
      i) Remove fuel pump relay from connector.
      ii) Connect two terminals of relay connector using service wire (1) as shown in figure.

⚠ CAUTION

Check to make sure that connection is made between correct terminals. Wrong connection can cause damage to ECM, wire harness, etc.

      iii) Turn ignition switch ON.

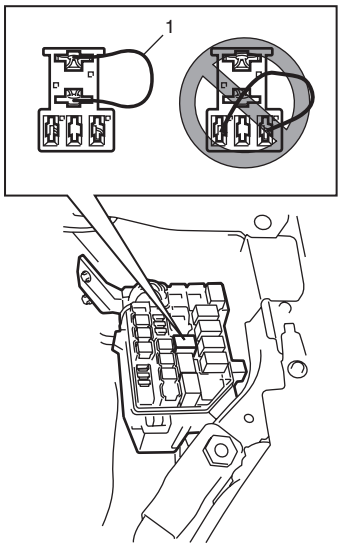

I5RW0A170011-02

7) Apply battery voltage to injector (1) for 15 seconds and measure injected fuel volume with graduated cylinder. Test each injector two or three times. If injected volume is out of reference value greatly, replace injector.

   Reference injected fuel volume
   Approx. 46 cc/15 sec. (1.62/1.55 US/Imp oz/15 sec.)

8) Check fuel leakage from injector nozzle. Do not operate injector for this check (but fuel pump should be at work). If fuel leaks (1) more than the following specifications, replace.

   Fuel leakage
   Less than 1 drop/min.

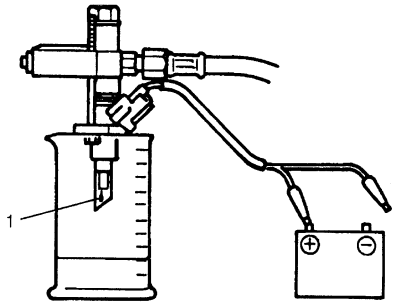

I2RH0B170013-01

9) Remove injector from special tool (A) and disconnect special tool (B) from injector.

⚠ WARNING

As fuel feed line is still under high fuel pressure even after inspection, removing injector directly may cause dangerous spout of fuel. Before removing injector, make sure to relieve fuel pressure as follows.

1. **Stop operation of fuel pump.**
2. **Put graduated cylinder under injector.**
3. **Apply battery voltage to injector until no fuel is injected from injector.**

10) Carry out Steps 3) through 9) on each injector to obtain 4 readings.
11) After checking, disconnect fuel feed hose from special tool (A) and remove special tool (B).
12) Connect fuel feed hose to delivery pipe.

Fuel Filler Cap Inspection

S7RW0A1706010

⚠ WARNING

Before starting the following procedure, be sure to observe "Precautions on Fuel System Service" in order to reduce the risk of fire and personal injury.

Remove cap (1), and check gasket for even filler neck imprint, and deterioration or any damage. If gasket (2) is in malcondition, replace cap.

NOTE

If cap requires replacement, only a cap with the same features should be used. Failure to use correct cap can result in fire and personal injury.

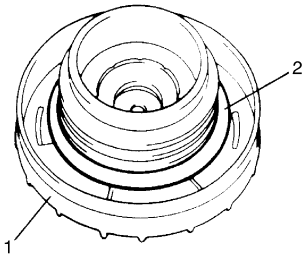

I2RH01170008-01

Fuel Tank Inlet Valve Removal and Installation

S7RW0A1706011

⚠ WARNING

Before starting the following procedure, be sure to observe "Precautions on Fuel System Service" in order to reduce the risk or fire and personal injury.

Removal

1) Remove fuel tank referring to "Fuel Tank Removal and Installation".
2) Remove fuel tank inlet valve (1) using flat head rod (2) or the like.

⚠ CAUTION

Be careful not to damage fuel tank inlet valve(1) with flat head rod (2) or the like.

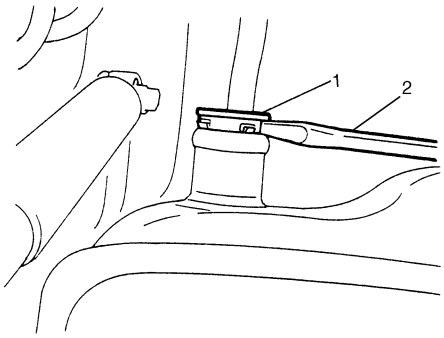

I7RW01170013-01

Installation

1) Install fuel tank inlet valve (1) to fuel tank.

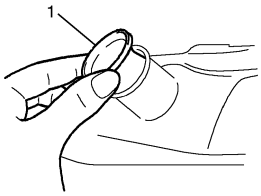

I2RH0B170018-01

2) Install fuel tank referring to "Fuel Tank Removal and Installation".

Fuel Tank Inlet Valve Inspection

S7RW0A1706012

⚠ WARNING

Before starting the following procedure, be sure to observe "Precautions on Fuel System Service" in order to reduce the risk or fire and personal injury.

Check fuel tank inlet valve for the following.
If any damage or malfunction is found, replace.

- Damage
- Smooth opening and closing

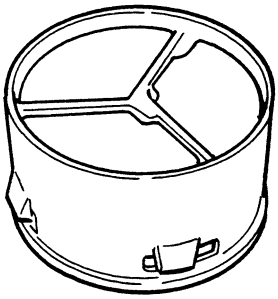

I2RH0B170019-01

Fuel Tank Removal and Installation

S7RW0A1706013

⚠ WARNING

Before starting the following procedure, be sure to observe "Precautions on Fuel System Service" in order to reduce the risk of fire and personal injury.

Removal

1) Relieve fuel pressure in fuel feed line according to "Fuel Pressure Relief Procedure".
2) Disconnect negative cable at battery.
3) Remove fuel filler cap.
4) Insert hose of a hand operated pump into fuel filler hose (1) and drain fuel in space "A" as shown in figure.

⚠ CAUTION

Do not force pump hose into fuel tank.

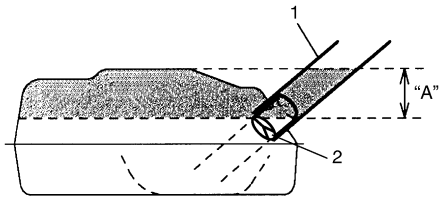

I4RS0B170022-01

2. Inlet check valve

5) Hoist vehicle, and remove clamp (2), fuel filler hose (1) and breather hose (3) from fuel filler neck.

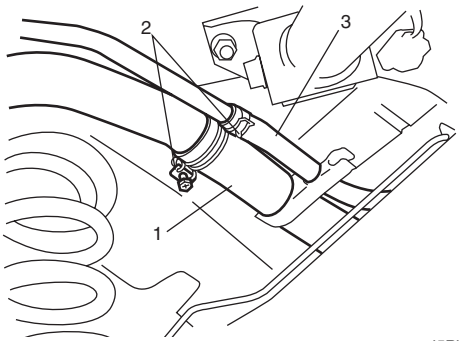

I5RW0A170012-01

6) Remove exhaust center pipe referring to "Exhaust Pipe and Muffler Removal and Installation in Section 1K".
7) Remove propeller shaft (For 4WD model) referring to "Propeller Shaft Assembly Removal and Installation in Section 3D".
8) Due to absence of fuel tank drain plug, drain fuel tank by pumping fuel out through fuel tank filler. Use hand operated pump device to drain fuel tank.

⚠ CAUTION

- **Do not force pump hose into fuel tank.**
- **Never store fuel in an open container due to possibility of fire or explosion.**

9) Disconnect quick joint (fuel pipe) (1) from fuel pipes (2) referring to "Fuel Hose Disconnecting and Reconnecting".

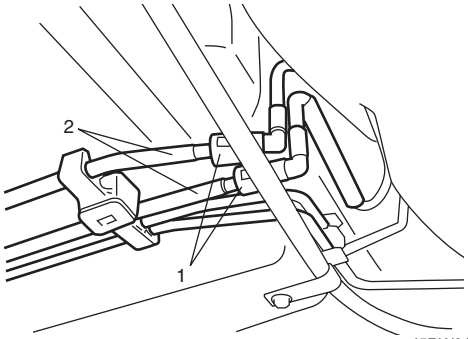

I5RW0A170014-02

10) Support fuel tank (1) with jack (2) and remove its mounting bolts (3).

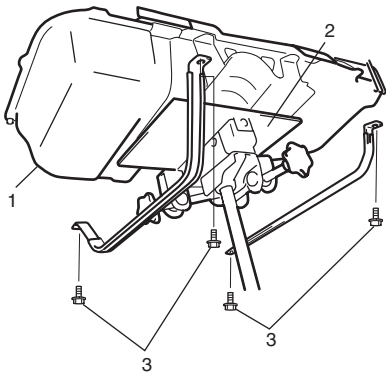

I5RW0A170013-01

11) Lower fuel tank a little as to disconnect wire harness at connector (1)and ground wire (2), then remove fuel tank.

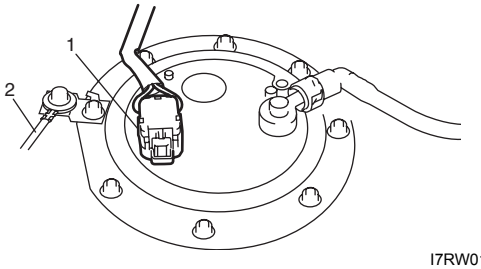

I7RW01170009-01

Installation

⚠ CAUTION

- **When connecting joint, clean outside surfaces of pipe where joint is to be inserted, push joint into pipe till joint lock clicks and check to ensure that pipes are connected securely, or fuel leak may occur.**
- **Never let the fuel hoses touch the ABS sensor harness (if equipped).**

1) If parts have been removed from fuel tank, install them before installing fuel tank to vehicle.
2) Raise fuel tank (1) with jack (2) and connect fuel pump connector (3), ground wire (4) and clamp wire harness.

   Tightening torque
   Ground wire bolt (a): 11 N·m (1.1 kgf-m, 8.0 lb-ft)

3) Install fuel tank to vehicle.

   Tightening torque
   Fuel tank bolt (b): 45 N·m (4.5 kgf-m, 33.0 lb-ft)

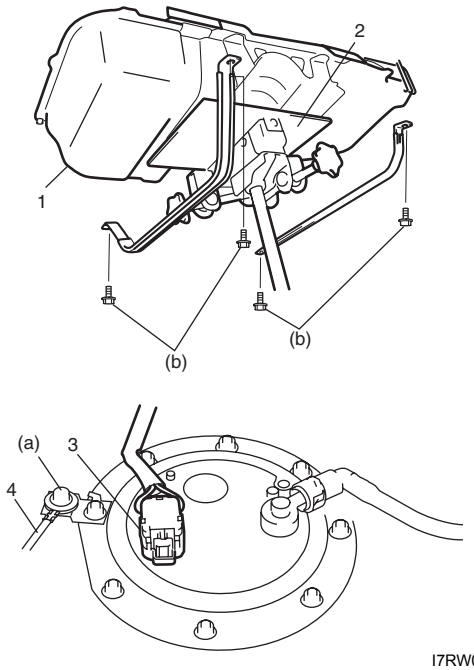

I7RW01170010-01

4) Connect fuel filler hose (1) and breather hose (2) to filler neck (3) as shown in figure, and clamp them securely.

   Tightening torque
   Fuel filler hose clamp (a): 1.5 N·m (0.15 kgf-m, 1.0 lb-ft)

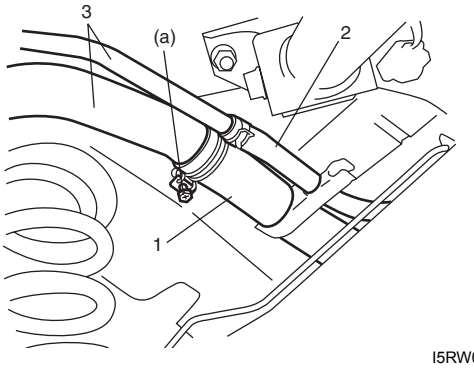

I5RW0A170017-01

5) Connect fuel feed hose (1) and vapor hose (2) to each pipe as shown in figure, and clamp them securely.

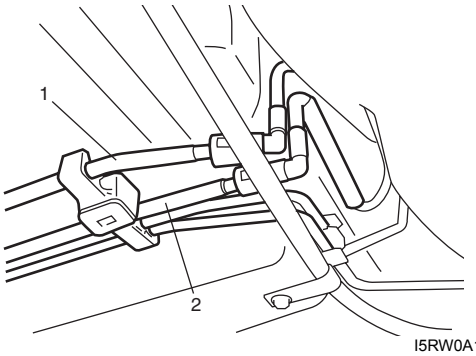

I5RW0A170018-01

6) Install exhaust center pipe referring to “Exhaust Pipe and Muffler Removal and Installation in Section 1K”.
7) Install propeller shaft (For 4WD model) referring to “Propeller Shaft Assembly Removal and Installation in Section 3D”.
8) Connect negative cable at battery.
9) With engine OFF, turn ignition switch to ON position and check for fuel leaks.

Fuel Tank Inspection

S7RW0A1706014

After removing fuel tank, check hoses and pipes connected to fuel tank for leaks, loose connections, deterioration or damage. Also check fuel pump assembly gaskets for leaks, visually inspect fuel tank for leaks and damage.
Replace any damaged or malconditioned parts.

Fuel Tank Purging Procedure

S7RW0A1706015

⚠ WARNING

- **Before starting the following procedure, be sure to observe "Precautions on Fuel System Service" in order to reduce the risk of fire and personal injury.**
- **This purging procedure will not remove all fuel vapor.**
  Do not attempt any repair on tank using heat of flame as an explosion resulting in personal injury could occur.

⚠ CAUTION

Never remain water in fuel tank after washing, or fuel tank inside will get corrosion.

The following procedure are used for purging fuel tank.

1) After removing fuel tank, remove all hoses, pipes and fuel pump assembly from fuel tank.
2) Drain all remaining fuel from tank.
3) Place fuel tank to flushing area.
4) Fill tank with warm water or tap water, and agitate vigorously and drain. Repeat this washing until inside of tank is clean. Replace tank if its inside is rusty.
5) Completely flush out remaining water after washing.
6) Be sure to dry fuel tank assembly thoroughly out of direct sunlight after washing.

Fuel Pump On-Vehicle Inspection

S7RW0A1706016

⚠ WARNING

Before starting the following procedure, be sure to observe "Precautions on Fuel System Service" in order to reduce the risk of fire and personal injury.

NOTE

The fuel pressure regulator is incorporated with the fuel pump assembly so individual inspection of it is impossible.

1) Remove filler cap and turn ON ignition switch (2). Then fuel pump operating sound should be heard from fuel filler (1) for about 2 seconds and stop. Be sure to reinstall fuel filler cap after checking.
   If the check result is not satisfactory, go to "Fuel Pump and Its Circuit Check in Section 1A".

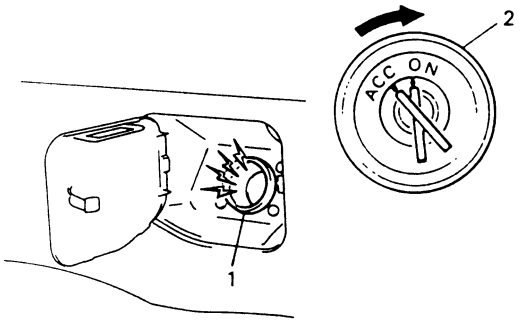

IVSY01170013-01

2) Turn OFF ignition switch and leave over 10 minutes as it is.
3) Fuel pressure should be felt at fuel feed hose (1) for about 2 seconds after ignition switch ON.
   If fuel pressure is not felt, go to "Fuel Pressure Check in Section 1A".

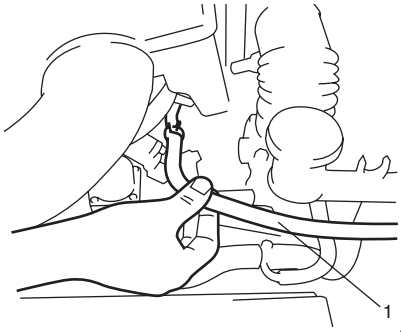

I5RW0A170019-01

Fuel Pump Assembly Removal and Installation

S7RW0A1706017

⚠ WARNING

Before starting the following procedure, be sure to observe "Precautions on Fuel System Service" in order to reduce the risk of fire and personal injury.

Removal

1) Remove fuel tank from vehicle referring to "Fuel Tank Removal and Installation".
2) Disconnect fuel pipe (1) from fuel pump assembly (2) referring to "Fuel Hose Disconnecting and Reconnecting".

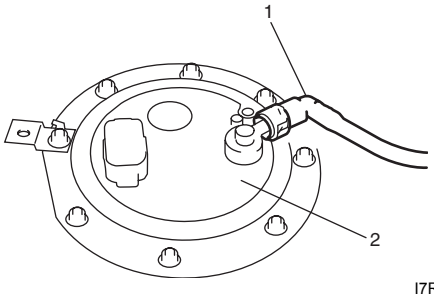

I7RW01170011-01

3) Remove fuel pump assembly and earth bracket from fuel tank.

Installation

⚠ CAUTION

When connecting joint, clean outside surface of pipe where joint is to be inserted, push joint into pipe till joint lock clicks and check to ensure that pipes are connected securely, or fuel leak may occur.

1) Clean mating surfaces of fuel pump assembly and fuel tank.
2) Put plate (2) on fuel pump assembly (1) by matching the protrusion of fuel pump assembly (3) to plate hole (4) as shown.

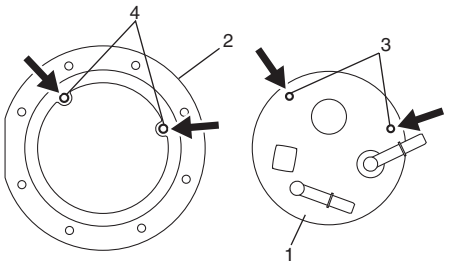

I5JB0A171025-01

3) Install new gasket (2), fuel pump assembly (1) and earth bracket (5) with plate (3) to fuel tank (4).

Tightening torque
Fuel pump assembly bolt (a): 11 N·m (1.1 kgf-m, 8.0 lb-ft)

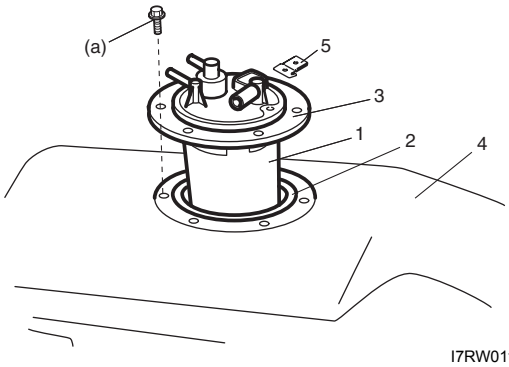

I7RW01170012-01

4) Connect fuel feed pipe (1) to fuel pump assembly (2).

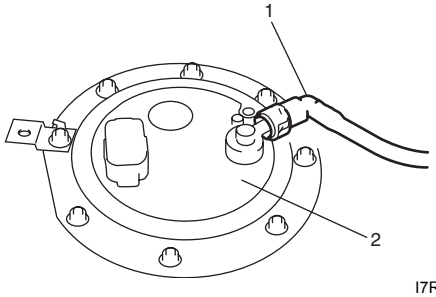

I7RW01170011-01

5) Install fuel tank to vehicle. Refer to “Fuel Tank Removal and Installation”.

Main Fuel Level Sensor Removal and Installation

S7RW0A1706018

⚠ CAUTION

- **Do not touch resister plate (1) and deform arm (2). It may cause main fuel level sensor to fail.**
- **Be very careful not to cause damage to fuel tube installed section (sealed section in bore). If it be damaged, replace it with new one, or fuel will leak from the part.**

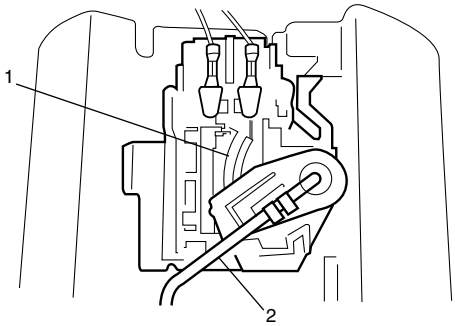

I4RS0A170016-01

Removal

1) Remove fuel pump assembly from fuel tank referring to “Fuel Pump Assembly Removal and Installation”.
2) Disconnect main fuel level sensor connector (3).
3) With pressing snap-fit part (2), remove main fuel level sensor (1) by sliding it in the arrow direction as shown in figure.

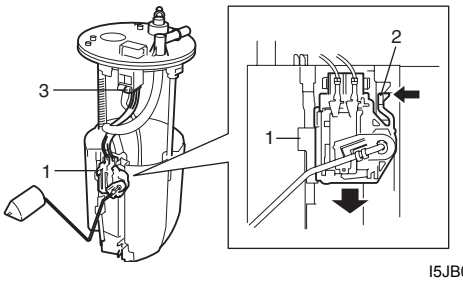

I5JB0A171026-01

Installation

Reverse removal procedure for installation.

Fuel Pump Inspection

S7RW0A1706019

- Check fuel pump assembly for damage.
- Check fuel suction filter for evidence of dirt and contamination.
  If present, replace or clean and check for presence of dirt in fuel tank.
- For electrical circuit, refer to “Fuel Pump and Its Circuit Check in Section 1A”.
- For inspection of fuel level gauge (1), refer to “Fuel Level Sensor Inspection in Section 9C”.

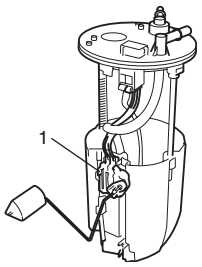

I5JB0A171027-01

Specifications

Tightening Torque Specifications

S7RW0A1707001

Fastening part	Tightening torque			Note
	N·m	kgf-m	lb-ft	
Fuel delivery pipe bolt	25	2.5	18.0	☞
Ground wire bolt	11	1.1	8.0	☞
Fuel tank bolt	45	4.5	33.0	☞
Fuel filler hose clamp	1.5	0.15	1.0	☞
Fuel pump assembly bolt	11	1.1	8.0	☞

NOTE

The specified tightening torque is also described in the following.
“Fuel System Components”
“Fuel Hose Disconnecting and Reconnecting”

Reference:
For the tightening torque of fastener not specified in this section, refer to “Fasteners Information in Section 0A”.

Special Tools and Equipment

Special Tool

S7RW0A1708001

09912–57610 Injector checking tool plate ☞ 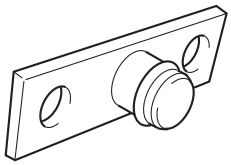	09912–58421 Checking tool set This kit includes the following items. 1. Tool body and washer, 2. Body plug, 3. Body attachment-1, 4. Holder, 5. Return hose and clamp, 6. Body attachment-2 and washer, 7. Hose attachment-1, 8. Hose attachment-2 ☞ 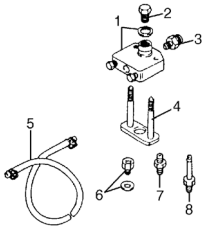
09912–58432 Fuel pressure gauge hose This tool is included in fuel pressure gauge set (09912-58413). ☞ 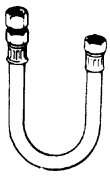	09912–58442 Fuel pressure gauge This tool is included in fuel pressure gauge set (09912-58413). ☞
09912–58490 3-way joint & hose ☞ 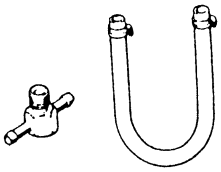	09919–47020 Quick joint remover ☞ 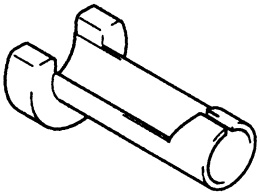
09930–88530 Injector test lead ☞ 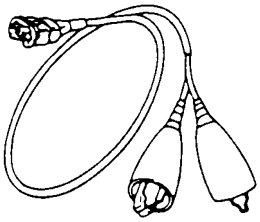	SUZUKI scan tool (SUZUKI-SDT) — This kit includes following items. 1. SUZUKI-SDT 2. DLC3 cable 3. USB cable 4. AC/DC power supply 5. Voltage meter probe 6. Storage case ☞ 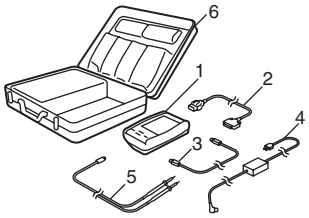

Ignition System

General Description

Ignition System Construction

S7RW0A1801001

The ignition system is an electronic (distributorless) ignition system. It consists of the parts as described below.

- **ECM**
  It detects the engine and vehicle conditions through the signals from the sensors, determines the most suitable ignition timing and time for electricity to flow to the primary coil and sends a signal to the ignitor (power unit) in the ignition coil assembly.
- **Ignition coil assembly (including an ignitor)**
  The ignition coil assembly has a built-in ignitor which turns ON and OFF the current flow to the primary coil according to the signal from ECM. When the current flow to the primary coil is turned OFF, a high voltage is induced in the secondary coil.
- **High-tension cords and spark plugs**
- **CMP sensor (Camshaft position sensor) and CKP sensor (Crankshaft position sensor)**
  Using signals from these sensors, ECM identifies the specific cylinder whose piston is in the compression stroke, detects the crank angle and adjusts initial ignition timing automatically.
- **TP sensor, ECT sensor, MAP sensor, MAF sensor, IAT sensor, knock sensor and other sensors / switches**

Although this ignition system does not have a distributor, it has two ignition coil assemblies (one is for No.1 and No.4 spark plugs and the other is for No.2 and No.3 spark plugs). When an ignition signal is sent from ECM to the ignitor in the ignition coil assembly for No.1 and No.4 spark plugs, a high voltage is induced in the secondary coil and that passes through the high-tension cords and causes No.1 and No.4 spark plugs to spark simultaneously. Likewise, when an ignition signal is sent to the ignitor in the other ignition coil assembly, No.2 and No.3 spark plugs spark simultaneously.

Schematic and Routing Diagram

Ignition System Wiring Circuit Diagram

S7RW0A1802001

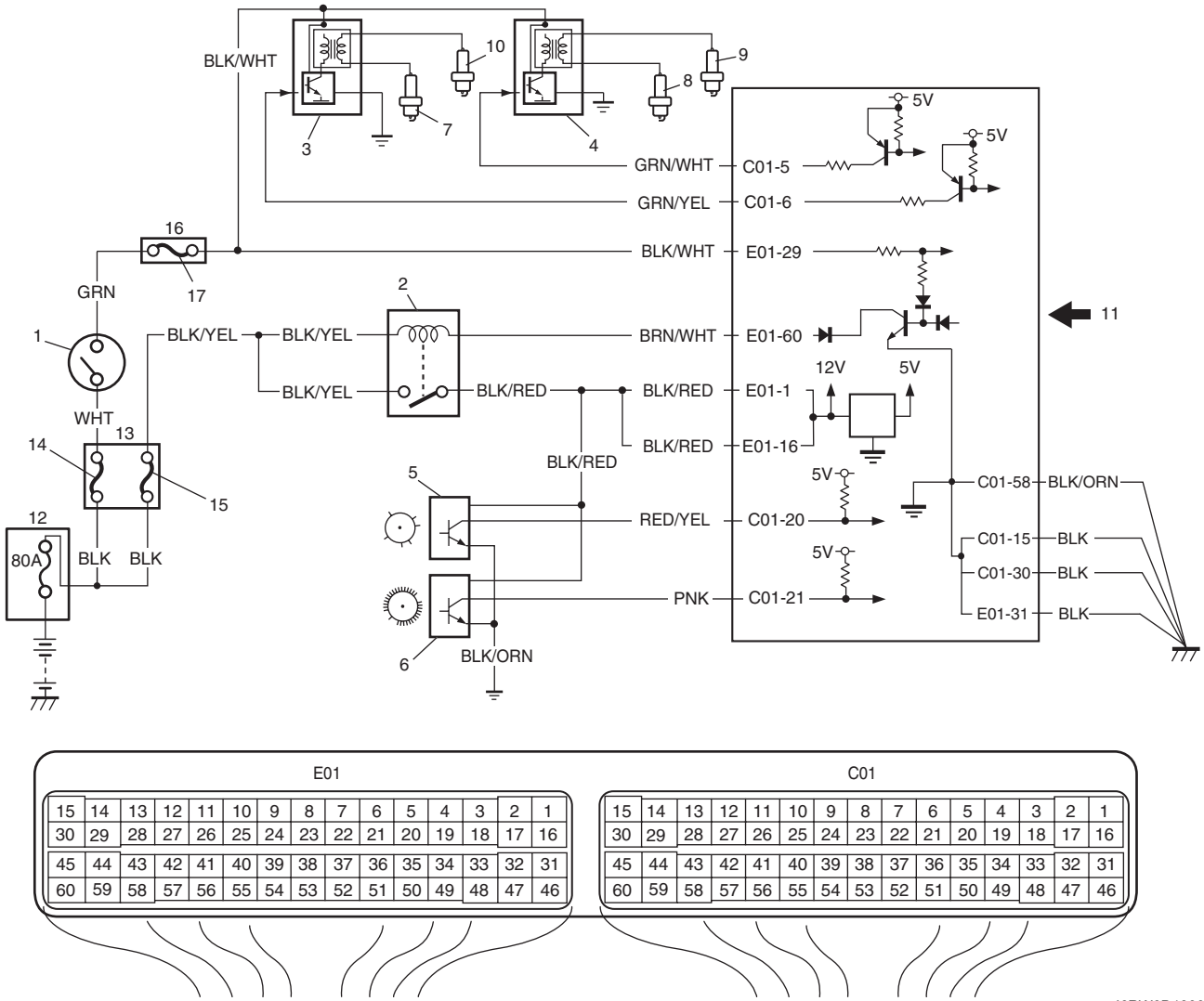

I6RW0D180001-01

1. Ignition switch	7. No.1 spark plug	13. Relay box
2. Main relay	8. No.2 spark plug	14. “IG ACC” fuse
3. Ignition coil assembly for No.1 and No.4 spark plugs	9. No.3 spark plug	15. “FI” fuse
4. Ignition coil assembly for No.2 and No.3 spark plugs	10. No.4 spark plug	16. Junction block assembly
5. CMP sensor	11. Sensed information	17. “IG COIL” fuse
6. CKP sensor	12. Battery fuse box	

Component Location

Ignition System Components Location

S7RW0A1803001

NOTE

The figure shows left-hand steering vehicle. For right-hand steering vehicle, parts with (*) are installed at the opposite side.

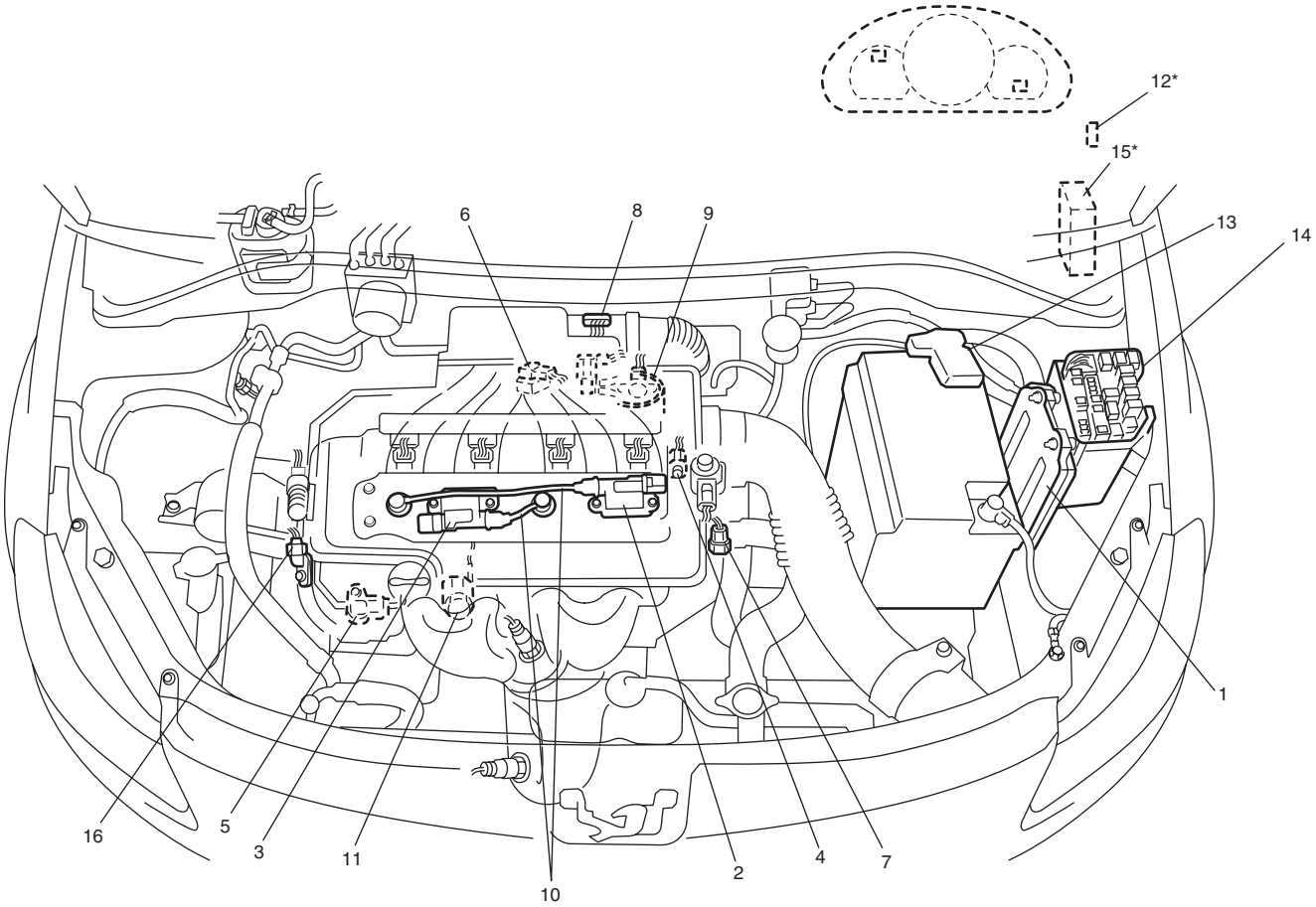

I5RW0C180002-01

1. ECM	7. ECT sensor	13. Battery fuse box
2. Ignition coil assembly for No.1 and No.4 spark plugs	8. MAF and IAT sensor	14. Relay box
3. Ignition coil assembly for No.2 and No.3 spark plugs	9. Electric throttle body assembly	15. Junction block assembly
4. CMP sensor (VVT model)	10. High-tension cords	16. CMP sensor (VVT model)
5. CKP sensor	11. Knock sensor	
6. MAP sensor (if equipped)	12. Data link connector	

Diagnostic Information and Procedures

Ignition System Symptom Diagnosis

S7RW0A1804001

Condition	Possible cause	Correction / Reference Item
Engine cranks, but will not start or hard to start (No spark)	Blown fuse for ignition coil	*Replace.*
	Loose connection or disconnection of lead wire or high-tension cord(s)	*Connect securely.*
	Faulty high-tension cord(s)	*Replace.*
	Faulty spark plug(s)	*Replace.*
	Faulty ignition coil	*Replace ignition coil assembly.*
	Faulty CKP sensor or CKP sensor plate	*Clean, tighten or replace.*
	Faulty CMP sensor or sensor rotor tooth of camshaft	*Clean, tighten or replace.*
	Faulty ECM	*Replace.*
Poor fuel economy or engine performance	Incorrect ignition timing	*Check related sensors and CKP sensor plate.*
	Faulty spark plug(s) or high-tension cord(s)	*Adjust, clean or replace.*
	Faulty ignition coil assembly	*Replace.*
	Faulty CKP sensor or CKP sensor plate	*Clean, tighten or replace.*
	Faulty CMP sensor or sensor rotor tooth of camshaft	*Clean, tighten or replace.*
	Faulty knock sensor	*Replace.*
	Faulty ECM	*Replace.*

Reference Waveform of Ignition System

S7RW0A1804002

Refer to “Reference waveform No.5”, “Reference waveform No.6” and “Reference waveform No.7” under “Inspection of ECM and Its Circuits in Section 1A” for waveform of Ignition trigger signal.

Ignition System Check

S7RW0A1804003

Step	Action	Yes	No
1	*Was “Engine and Emission Control System Check” performed?*	Go to Step 2.	Go to “Engine and Emission Control System Check in Section 1A”.
2	**Ignition spark test** 1) Check all spark plugs for condition and type referring to “Spark Plug Inspection”. 2) If OK, perform ignition spark test referring to “Ignition Spark Test”. *Is spark emitted from all spark plugs?*	Go to Step 12.	Go to Step 3.
3	**DTC check** 1) Perform DTC check referring to “DTC Check in Section 1A”. *Is DTC stored in ECM?*	Go to applicable DTC diag. flow.	Go to Step 4.
4	**Electrical connection check** 1) Check ignition coil assemblies and high-tension cords for electrical connection. *Are they connected securely?*	Go to Step 5.	Connect securely.
5	**High-tension cords check** 1) Check high-tension cord for resistance referring to “High-Tension Cord Inspection”. *Is check result satisfactory?*	Go to Step 6.	Replace high-tension cord(s).

Step	Action	Yes	No
6	**Ignition coil assembly power supply and ground circuit check** 1) Check ignition coil assembly power supply and ground circuits for open and short. *Are circuits in good condition?*	Go to Step 7.	Repair or replace.
7	**Ignition coil assembly check** 1) Check ignition coil for resistance referring to “Ignition Coil Assembly (Including Ignitor) Inspection”. *Is check result satisfactory?*	Go to Step 8.	Replace ignition coil assembly.
8	**CKP sensor check** 1) Check CKP sensor referring to “Crankshaft Position (CKP) Sensor Inspection in Section 1C”. *Is check result satisfactory?*	Go to Step 9.	Tighten CKP sensor bolt, replace CKP sensor or CKP sensor plate.
9	**CMP sensor check** 1) Check CMP sensor referring to “Camshaft Position (CMP) Sensor Inspection in Section 1C”. *Is check result satisfactory?*	Go to Step 10.	Tighten CMP sensor bolt, replace CMP sensor or intake camshaft.
10	**Ignition trigger signal circuit check** 1) Check ignition trigger signal wire for open, short and poor connection. *Is circuit in good condition?*	Go to Step 11.	Repair or replace.
11	**A known-good ignition coil assembly substitution** 1) Substitute a known-good ignition coil assembly and then repeat Step 2. *Is check result of Step 2 satisfactory?*	Go to Step 12.	Substitute a known-good ECM and then repeat Step 2.
12	**Ignition timing check** 1) Check initial ignition timing and ignition timing advance referring to “Ignition Timing Inspection”. *Is check result satisfactory?*	System is in good condition.	Go to Step 13.
13	**Knock sensor check** 1) Confirm that knock sensor circuit is in good condition referring to “DTC P0327 / P0328: Knock Sensor Circuit Low / High in Section 1A”. 2) Check oscilloscope waveform of knock sensor signal referring to “Reference waveform No.19” and “Reference waveform No.20” under “Inspection of ECM and Its Circuits in Section 1A”. *Is check result satisfactory?*	Check CMP sensor, CMP sensor rotor tooth of camshaft, CKP sensor, CKP sensor plate and/or input signals related to this system.	Substitute a known-good knock sensor and recheck.

Ignition Spark Test

S7RW0A1804004

1) Remove air cleaner assembly with air intake pipe.
2) Disconnect all injector couplers from injectors.

⚠ WARNING

Without disconnection of injector couplers, combustible gas may come out from spark plug holes during this test and may get ignited in engine room.

3) Remove spark plug and check it for condition and type referring to “Spark Plug Inspection”.
4) If OK, connect ignition coil coupler to ignition coil assembly and connect spark plug to ignition coil assembly or high-tension cord. Ground spark plug.
5) Crank engine and check if each spark plug sparks.

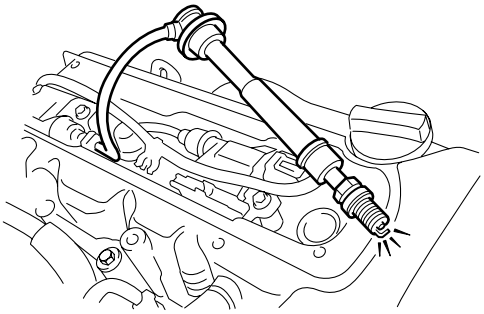

I4RS0A180006-01

6) If no spark is emitted, inspect the related parts as described in “Ignition System Symptom Diagnosis”.

Repair Instructions

High-Tension Cord Removal and Installation

S7RW0A1806001

Removal

1) Remove air cleaner assembly with air intake pipe and cylinder head upper cover.
2) Disconnect No.1 cylinder (2) and No.3 cylinder (3) high-tension cords from ignition coil assemblies (1) while gripping each cap.

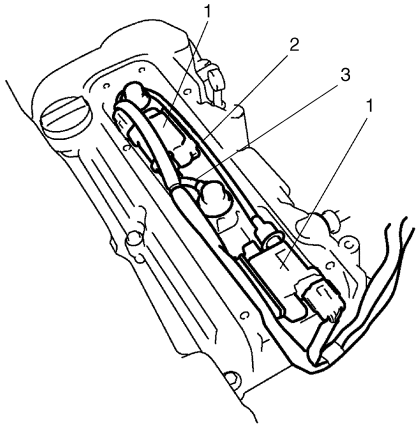

I4RS0A180003-01

3) Pull out high-tension cords from spark plugs while gripping each cap.

⚠ CAUTION

- **Removal of high-tension cords together with clamps will be recommended so as not to damage their inside wire (resistive conductor).**
- **For the same reason, pull out each connection by gripping cap portion.**

Installation

1) Install No.1 cylinder (2) and No.3 cylinder (3) high-tension cords to spark plugs and ignition coil assemblies (1) while gripping each cap.

⚠ CAUTION

- **Never attempt to use metal conductor high-tension cords as replacing parts.**
- **Insert each cap portion fully when installing high-tension cords.**

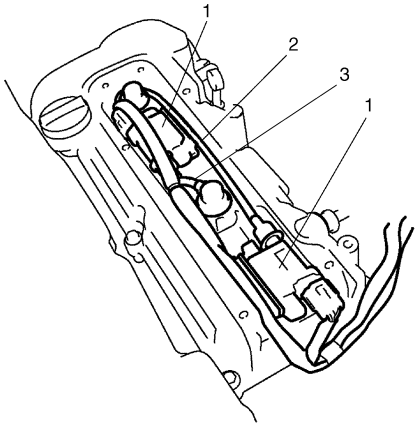

I4RS0A180004-01

High-Tension Cord Inspection

S7RW0A1806002

Measure resistance of high-tension cord (1) by using ohmmeter.
If resistance exceeds specification, replace high-tension cord(s).

High-tension cord resistance
No.1 cylinder high-tension cord resistance: 1.4 – 4.0 kΩ
No.3 cylinder high-tension cord resistance: 0.6 – 2.0 kΩ

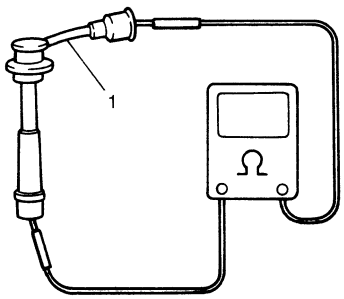

I2RH0B180005-01

Spark Plug Removal and Installation

S7RW0A1806003

Removal

1) Remove air cleaner assembly with air intake pipe and cylinder head upper cover.
2) Pull out high-tension cords by gripping their caps and then remove ignition coil assemblies referring to “Ignition Coil Assembly (Including Ignitor) Removal and Installation”.
3) Remove spark plugs.

Installation

1) Install spark plugs and tighten them to specified torque.

   Tightening torque
   Spark plug: 25 N·m (2.5 kgf-m, 18.0 lb-ft)

2) Install ignition coil assemblies referring to “Ignition Coil Assembly (Including Ignitor) Removal and Installation”.
3) Install high-tension cords securely by gripping their caps.
4) Install cylinder head upper cover and air cleaner assembly with air intake pipe.

Spark Plug Inspection

S7RW0A1806004

⚠ CAUTION

- **When servicing the iridium / platinum spark plugs (slender center electrode type plugs), do not touch the center electrode to avoid damage to it. The electrode is not strong enough against mechanical force as it is slender and its material is not mechanically tough.**
- **Do not clean or adjust gap for the iridium / platinum spark plugs.**

Inspect spark plug for:

- Electrode wear
- Carbon deposits
- Insulator damage

If any abnormality is found for nickel spark plugs, adjust air gap, clean with spark plug cleaner or replace it with specified new plug.
For iridium / platinum spark plugs, replace it with new plug.

Spark plug air gap “a”
: 1.0 – 1.1 mm (0.040 – 0.043 in.)

Spark plug type
NGK: BKR6E-11 (Nickel) / IFR6J11 (Iridium)
DENSO: K20PR-U11 (Nickel)

NOTE

NGK IFR6J11 is highly recommended for better engine starting performance under –25 °C (–13 °F).

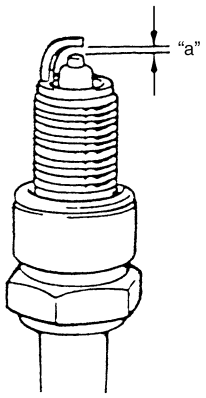

IYSQ01181012-01

Ignition Coil Assembly (Including Ignitor) Removal and Installation

S7RW0A1806005

Removal

1) Disconnect negative cable at battery.
2) Remove air cleaner assembly with air intake pipe and cylinder head upper cover.
3) Disconnect ignition coil coupler.
4) Disconnect high-tension cord (3) from ignition coil assembly (2).
5) Remove ignition coil bolts (1) and then pull out ignition coil assembly.

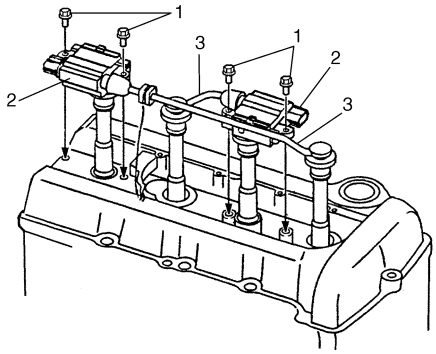

I2RH0B180006-01

Installation

1) Install ignition coil assembly (2).
2) Tighten ignition coil bolts (1) to specified torque, and then connect ignition coil coupler.

   Tightening torque
   Ignition coil bolt (a): 11 N·m (1.1 kgf-m, 8.0 lb-ft)

3) Install high-tension cord (3) to ignition coil assembly while gripping its cap.

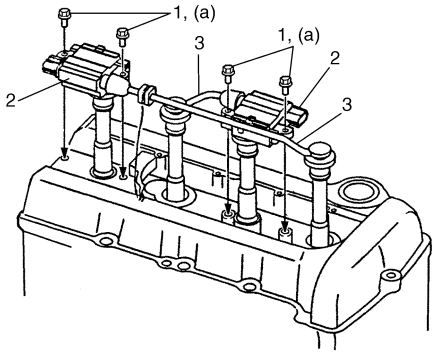

I3RM0A180004-01

4) Install cylinder head upper cover and air cleaner assembly with air intake pipe.
5) Connect negative cable to battery.

Ignition Coil Assembly (Including Ignitor) Inspection

S7RW0A1806006

Measure secondary coil for resistance.
If resistance is out of specification, replace ignition coil assembly.

Secondary coil resistance
7.6 – 10.2 kΩ at 20 ° (68 °F)

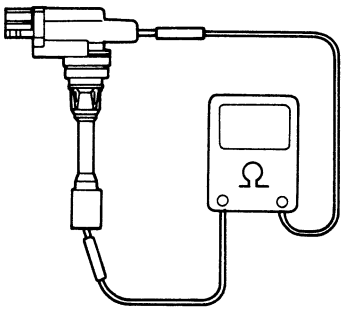

I2RH0B180007-01

Ignition Timing Inspection

S7RW0A1806007

NOTE

- **Ignition timing is not adjustable. If ignition timing is out of specification, check system related parts.**
- **Before starting engine, place transmission gear shift lever in “Neutral”, and set parking brake.**

1) Connect scan tool to DLC (1) with ignition switch OFF.

   Special tool
   (A): SUZUKI scan tool (SUZUKI-SDT)

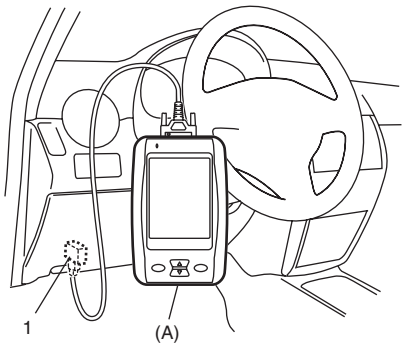

I5RW0C110011-01

2) Start engine and warm it up to normal operating temperature.
3) Make sure that all of electrical loads except ignition are switched off.
4) Check to be sure that idle speed is within specification.
5) Fix ignition timing by using “Fixed Spark Control” of “Engine / Active Test” mode on scan tool.
6) Set timing light (1) to high-tension cord for No.1 cylinder and check that ignition timing is within specification.

Initial ignition timing
fixed with SUZUKI scan tool: 5 ± 3° BTDC (at specified idle speed)

Ignition order
1 – 3 – 4 – 2

Special tool
(A): 09930–76420

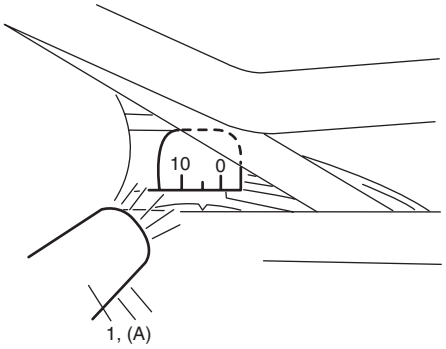

I3RB0A180004-01

7) If ignition timing is out of specification, check the followings.
   - CKP sensor
   - CKP sensor plate
   - TP sensor
   - CMP sensor
   - CMP sensor rotor tooth of camshaft
   - Vehicle speed signal from ABS hydraulic unit / control module
   - Knock sensor
   - Timing chain cover installation
8) After checking initial ignition timing, release ignition timing fixation by using scan tool.
9) With engine idling (throttle opening at closed position and vehicle stopped), check that ignition timing is about 5° – 15° BTDC (Constant variation within a few degrees from 5° – 15° BTDC indicates no abnormality but proves operation of electronic timing control system.) Also, check that increasing engine speed advances ignition timing.
   If the check results are not satisfactory, check CKP sensor and ECM.

Specifications

Tightening Torque Specifications

S7RW0A1807001

Fastening part	Tightening torque			Note
	N·m	kgf-m	lb-ft	
Spark plug	25	2.5	18.0	☞
Ignition coil bolt	11	1.1	8.0	☞

Reference:
For the tightening torque of fastener not specified in this section, refer to “Fasteners Information in Section 0A”.

Special Tools and Equipment

Special Tool

S7RW0A1808001

09930–76420 Timing-light (dry cell type) ☞	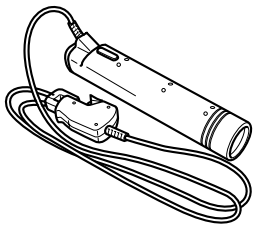	SUZUKI scan tool (SUZUKI-SDT) — This kit includes following items. 1. SUZUKI-SDT 2. DLC3 cable 3. USB cable 4. AC/DC power supply 5. Voltage meter probe 6. Storage case ☞	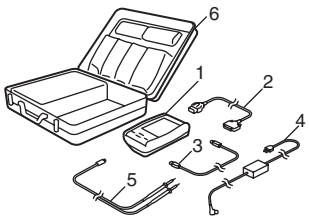

Starting System

Schematic and Routing Diagram

Cranking System Circuit Diagram

S7RW0A1902001

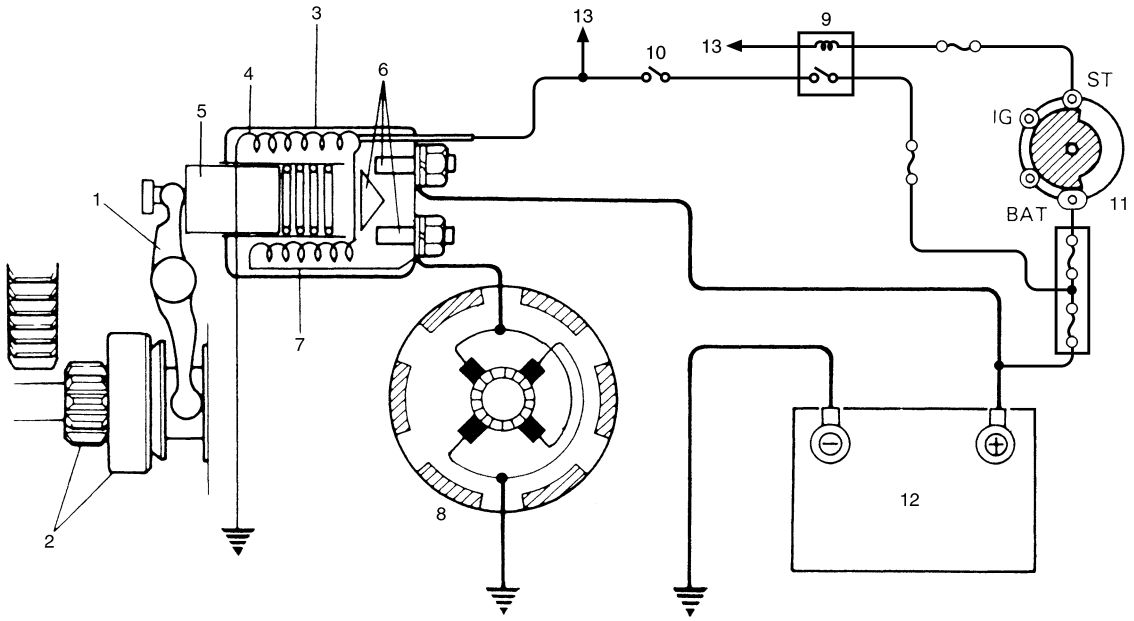

I4RS0A190001-01

1. Pinion drive lever	6. Magnetic switch contacts	11. Ignition & Starter switch
2. Pinion & Over-running clutch	7. Pull-in coil	12. Battery
3. Magnetic switch	8. Starting motor	13. To ECM
4. Hold-in coil	9. Starting motor control relay	
5. Plunger	10. A/T: Transmission range sensor (shift switch)	

Diagnostic Information and Procedures

Cranking System Symptom Diagnosis

S7RW0A1904001

Possible symptoms due to starting system trouble would be as follows:

- Starting motor does not run (or runs slowly)
- Starting motor runs but fails to crank engine
- Abnormal noise is heard

Proper diagnosis must be made to determine exactly where the cause of each trouble lies in battery, wiring harness, (including starting motor switch), starting motor or engine.
Do not remove motor just because starting motor does not run. Check the following items and narrow down scope of possible causes.

1) Condition of trouble
2) Tightness of battery terminals (including ground cable connection on engine side) and starting motor terminals
3) Discharge of battery
4) Mounting of starting motor

Condition	Possible cause	Correction / Reference Item
Motor not running (No operating sound of magnetic switch)	Transmission range sensor is not in P or N, or not adjusted (A/T model)	*Shift in P or N, or adjust sensor. (A/T model)*
	Battery run down	*Recharge battery.*
	Battery voltage too low due to battery deterioration	*Replace battery.*
	Poor contact in battery terminal connection	*Retighten or replace.*
	Loose grounding cable connection	*Retighten.*
	Fuse set loose or blown off	*Tighten or replace.*
	Poor contacting action of ignition switch and magnetic switch	*Replace.*
	Lead wire coupler loose in place	*Retighten.*
	Open-circuit between ignition switch and magnetic switch	*Repair.*
	Open-circuit in pull-in coil	*Replace magnetic switch.*
	Brushes are seating poorly or worn down	*Repair or replace.*
	Poor sliding of plunger and/or pinion	*Repair.*
	Faulty starting motor control relay	*"Main Relay, Fuel Pump Relay, Starting Motor Control Relay, Throttle Actuator Control Relay and Radiator Cooling Fan Relay Inspection in Section 1C".*
	Faulty ECM and its circuit	*"Inspection of ECM and Its Circuits in Section 1A".*
Motor not running (Operating sound of magnetic switch heard)	Battery run down	*Recharge battery.*
	Battery voltage too low due to battery deterioration	*Replace battery.*
	Loose battery cable connections	*Retighten.*
	Burnt main contact point, or poor contacting action of magnetic switch	*Replace magnetic switch.*
	Brushes are seating poorly or worn down	*Repair or replace.*
	Weakened brush spring	*Replace.*
	Burnt commutator	*Replace armature.*
	Layer short-circuit of armature	*Replace.*
	Crankshaft rotation obstructed	*Repair.*
Starting motor running but too slow (small torque) (If battery and wiring are satisfactory, inspect starting motor)	Insufficient contact of magnetic switch main contacts	*Replace magnetic switch.*
	Layer short-circuit of armature	*Replace.*
	Disconnected, burnt or worn commutator	*Repair commutator or replace armature.*
	Worn brushes	*Replace brush.*
	Weakened brush springs	*Replace spring.*
	Burnt or abnormally worn end bush	*Replace bush.*
Starting motor running, but not cranking engine	Worn pinion tip	*Replace over-running clutch.*
	Poor sliding of over-running clutch	*Repair.*
	Over-running clutch slipping	*Replace over-running clutch.*
	Worn teeth of ring gear	*Replace flywheel (M/T model) or drive plate (A/T model).*
Noise	Abnormally worn bush	*Replace bush.*
	Worn pinion or worn teeth of ring gear	*Replace over-running clutch, flywheel (M/T model) or drive plate (A/T model).*
	Poor sliding of pinion (failure in return movement)	*Repair or replace.*
	Worn internal or planetary gear teeth	*Replace.*
	Lack of oil in each part	*Lubricate.*

Condition	Possible cause	Correction / Reference Item
Starting motor does not stop running	Fused contact points of magnetic switch	*Replace magnetic switch.*
	Short-circuit between turns of magnetic switch coil (layer short-circuit)	*Replace magnetic switch.*
	Failure of returning action in ignition switch	*Replace.*

Cranking System Test

S7RW0A1904002

⚠ CAUTION

Each test must be performed within 3 – 5 seconds to avoid coil from burning.

Pull-In Test

Connect battery to the magnetic switch as shown.
Check that plunger and pinion move outward.
If plunger and pinion don't move, replace the magnetic switch.

NOTE

Before testing, disconnect lead wire from terminal "M" (2).

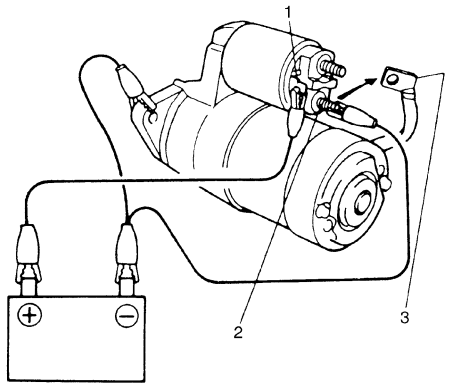

I2RH01190002-01

1.	Terminal "S"
3.	Lead wire (switch to motor)

Hold-In Test

While connected as the figure with plunger out, disconnect negative lead from terminal "M".
Check that plunger and pinion remain out.
If plunger and pinion return inward, replace the magnetic switch.

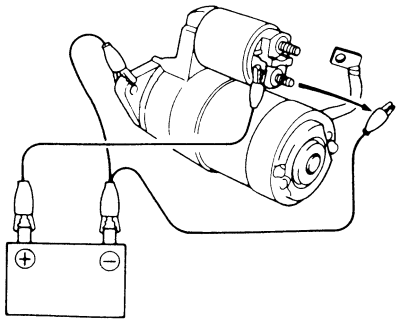

I2RH01190003-01

Plunger and Pinion Return Test

Disconnect negative lead from starting motor body.
Check that plunger and pinion return inward.
If plunger and pinion don't return, replace the magnetic switch.

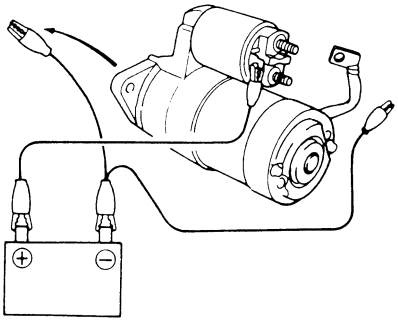

I2RH01190004-01

No-Load Performance Test

Connect battery and ammeter to starter as shown.
Check that starter rotates smoothly and steadily with pinion moving out. Check that ammeter indicates specified current.

Specified current (No-load performance test)
90 A MAX. at 11 V

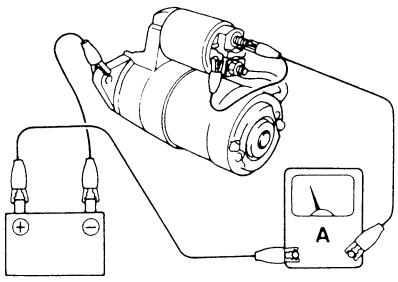

I2RH01190005-01

Repair Instructions

Starting Motor Dismounting and Remounting

S7RW0A1906001

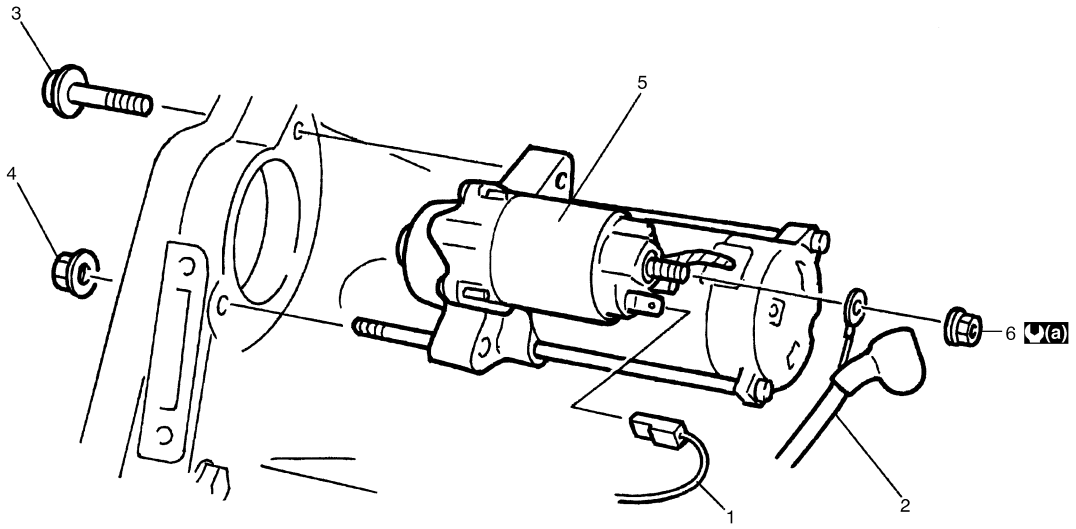

I4RS0A190002-01

(a)	: 9.8 N·m (0.98 kgf-m, 7.0 lb-ft)

Dismounting

1) Disconnect negative (–) battery lead at battery.
2) Disconnect magnetic switch lead wire (1) and battery cable (2) from starting motor terminals.
3) Detach shift & select control cable bracket from transaxle. (M/T model only)
4) Remove starting motor mount bolt (3) and nut (4).
5) Remove starting motor (5).

Remounting

Reverse the dismounting procedure noting the following.

- Tighten battery cable nut (6) to specified torque.

Tightening torque
Starting motor battery cable nut (a): 9.8 N·m (0.98 kgf-m, 7.0 lb-ft)

Starting Motor Components

S7RW0A1906002

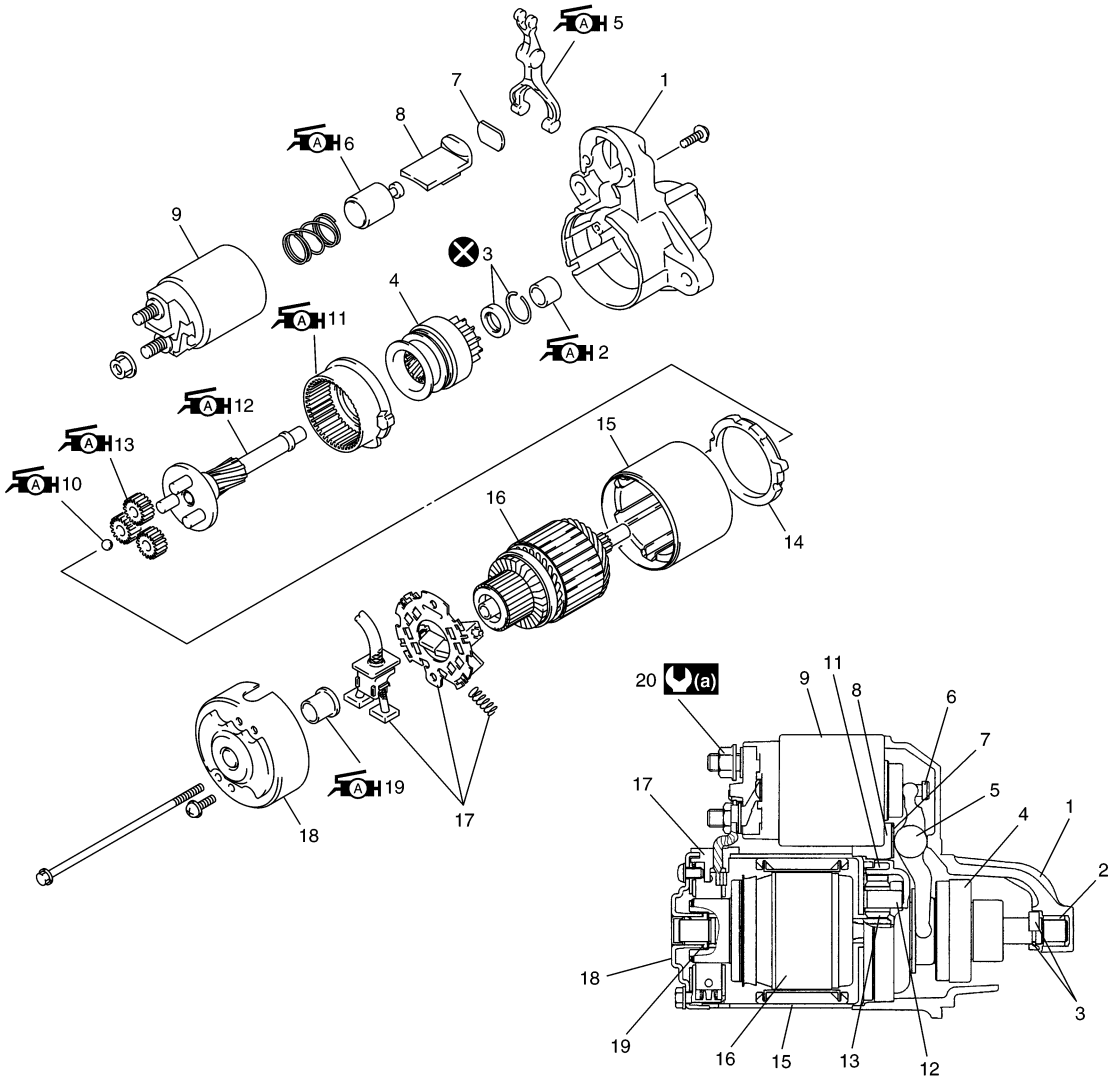

I4RS0A190003-01

1. Front housing	7. Plate	13. Planetary gear	19. Rear bush
2. Bush	8. Seal rubber	14. Packing	20. Starting motor battery cable nut
3. Pinion stop ring	9. Magnetic switch	15. Yoke	(a) : 9.8 N·m (0.98 kgf-m, 7.0 lb-ft)
4. Over-running clutch	10. Ball	16. Armature	⊗ : Do not reuse.
5. Lever	11. Internal gear	17. Brush assembly	Ⓐ : Apply grease 99000-25011 to sliding surface of each part.
6. Plunger	12. Planetary carrier shaft	18. Rear bracket	

Starting Motor Inspection

S7RW0A1906003

Plunger

Inspect plunger for wear. Replace if necessary.

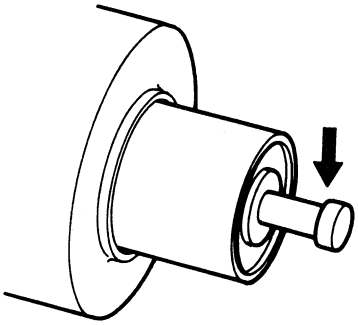

I2RH01190008-01

Magnetic Switch

Push in plunger and release it. The plunger should return quickly to its original position. Replace if necessary.

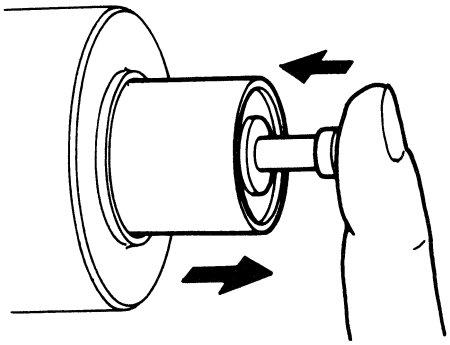

I2RH01190009-01

Pull-in coil open circuit test

Check for continuity across magnetic switch “S” terminal (1) and “M” terminal (2). If no continuity, coil is open and should be replaced.

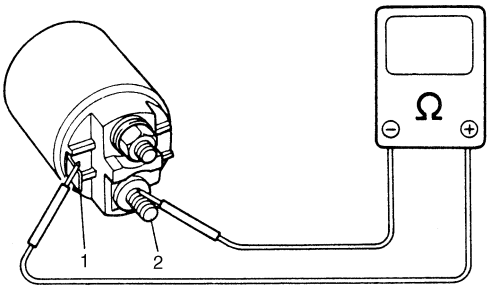

I2RH01190010-01

Hold-in coil open circuit test

Check for continuity across magnetic switch “S” terminal (1) and coil case. If no continuity, coil is open and should be replaced.

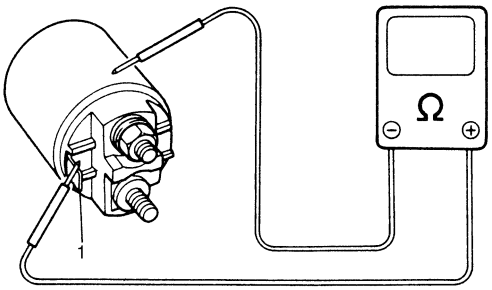

I2RH01190011-01

Rear Bracket Bush

Inspect bush for wear or damage. Replace if necessary.

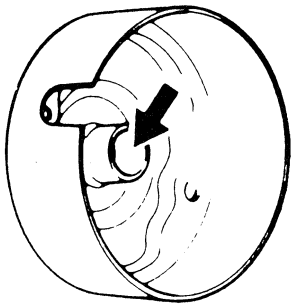

I2RH01190012-01

Brush

- Check brushes for wear.
  Measure length of brushes and if below the limit, replace the brush.

  <u>Brush length</u>
  Standard: 12.3 mm (0.48 in.)
  Limit: 7.0 mm (0.28 in.)

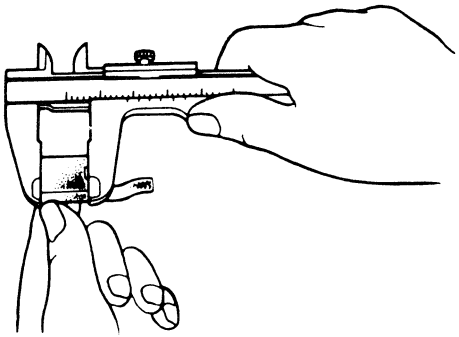

I2RH01190013-01

- Install brushes to each brush holder and check for smooth movement.

Spring
Inspect brush springs for wear, damage or other abnormal conditions. Replace if necessary.

Brush spring tension
Standard: 2.2 kg (4.85 lb)
Limit: 0.6 kg (1.33 lb)

Brush Holder

- Check movement of brush in brush holder. If brush movement within brush holder is sluggish, check brush holder for distortion and sliding faces for contamination.
  Clean or correct as necessary.
- Check for continuity across insulated brush (positive side) and grounded brush (negative side).
  If continuity exists, brush holder is grounded due to defective insulation and should be replaced.

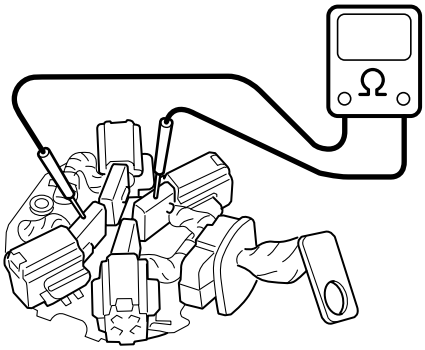

I4RS0A190004-01

Armature

- Inspect commutator for dirt or burn. Correct with sandpaper or lathe, if necessary.

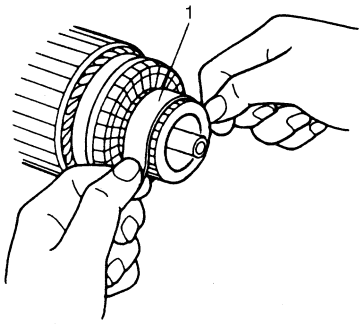

I7RW01190005-02

1. Sandpaper of #300 – 400

- Check commutator for uneven wear with armature (1) supported on V-blocks (2). If deflection of dial gauge (4) pointer exceeds limit, repair or replace.

NOTE

The following specification presupposes that the armature is free from bend. Bent armature must be replaced.

Commutator out of round
Standard: 0.05 mm (0.002 in.) or less
Limit: 0.4 mm (0.016 in.)

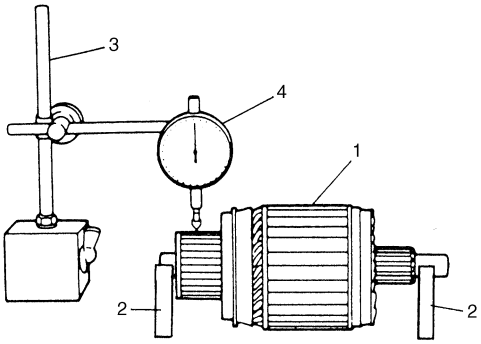

I2RH01190016-01

3. Magnetic stand

- Inspect the commutator for wear. If diameter is below limit, replace the armature.

Commutator outside diameter
Standard: 29.4 mm (1.16 in.)
Limit: 28.8 mm (1.14 in.)

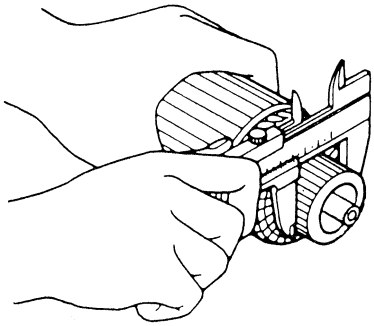

I2RH01190017-01

- Inspect the commutator (1) for insulator (2) depth. Correct or replace if below limit.

  Commutator insulator depth "a"
  Standard: 0.4 – 0.6 mm (0.016 – 0.023 in.)
  Limit: 0.2 mm (0.008 in.)

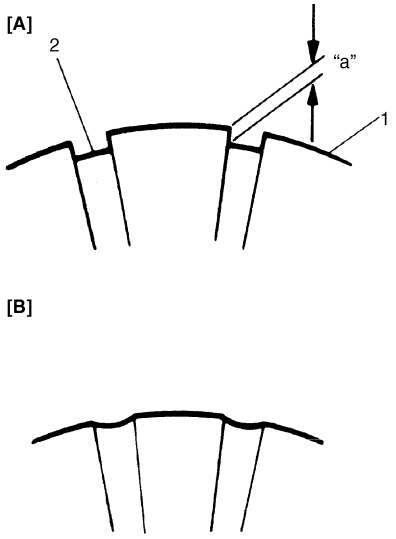

I3RH0A190005-01

[A]:	Correct
[B]:	Incorrect

- Check the commutator and armature core. If there is continuity, the armature is grounded and must be replaced.

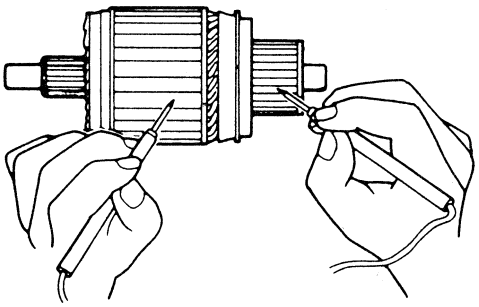

I2RH01190019-01

- Check for continuity between segments. If there is no continuity at any test point, there is an open circuit and the armature must be replaced.

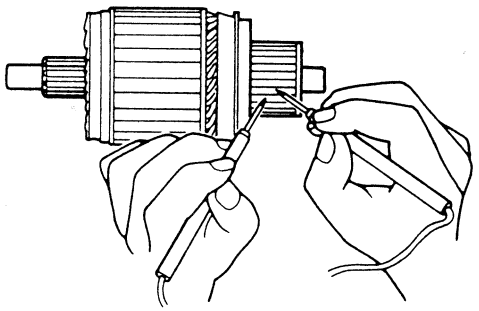

I2RH01190020-01

Gears

Inspect the internal gear and the planetary gears for wear, damage or other abnormal conditions. Replace if necessary.

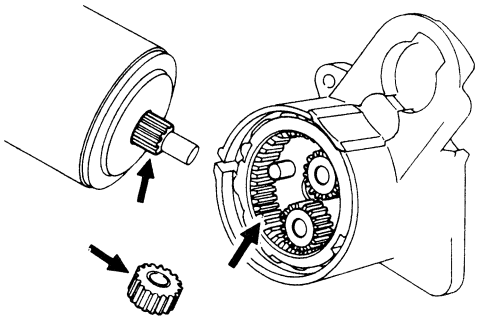

I2RH01190021-01

Pinion and Over-Running Clutch

- Inspect the pinion for wear, damage or other abnormal conditions.
  Check that clutch locks up when turned in direction of drive and rotates smoothly in reverse direction.
  Replace if necessary.

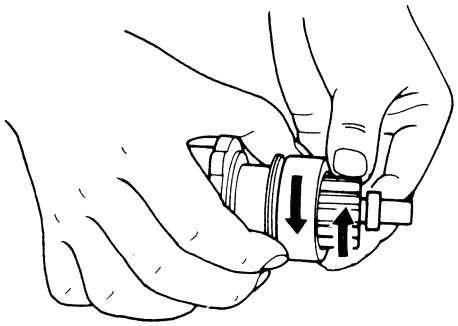

I2RH01190022-01

- Inspect the spline teeth for wear or damage. Replace if necessary.
  Inspect the pinion for smooth movement.

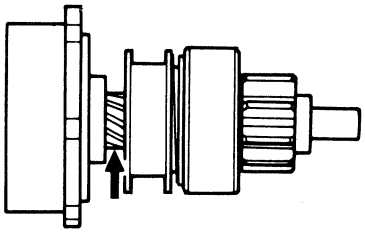

I2RH01190023-01

Front Housing Bush
Inspect the bush for wear or damage. Replace if necessary.

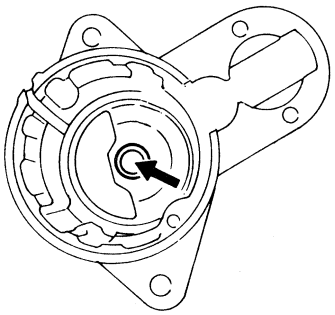

I2RH01190024-01

Specifications

Cranking System Specifications

S7RW0A1907001

Voltage			12 volts
Output			1.2 kW
Rating			30 seconds
Direction of rotation			Clockwise as viewed from pinion side
Brush length			Standard: 12.3 mm (0.48 in.) / Limit: 7.0 mm (0.28 in.)
Number of pinion teeth			8
Performance		Condition	Guarantee
Around at 20 °C (68 °F)	No load characteristic	11.0 V	90 A maximum 2370 r/min minimum
	Load characteristic	7.5 V 300 A	10.65 N·m (1.065 kgf-m, 7.70 lb-ft) minimum 840 r/min minimum
	Locked characteristic	4.0 V	780 A maximum 20 N·m (2.0 kgf-m, 14.5 lb-ft) minimum
	Magnetic switch operating voltage		8 volts maximum

Tightening Torque Specifications

S7RW0A1907002

Fastening part	Tightening torque			Note
	N·m	kgf-m	lb-ft	
Starting motor battery cable nut	9.8	0.98	7.0	☞

NOTE

The specified tightening torque is also described in the following.
“Starting Motor Dismounting and Remounting”
“Starting Motor Components”

Reference:
For the tightening torque of fastener not specified in this section, refer to “Fasteners Information in Section 0A”.

Special Tools and Equipment

Recommended Service Material

S7RW0A1908001

NOTE

Required service material is also described in the following.
“Starting Motor Components”

Charging System

General Description

Battery Description

S7RW0A1A01001

The battery has three major functions in the electrical system.

- It is a source of electrical energy for cranking the engine.
- It acts as a voltage stabilizer for the electrical system.
- It can, for a limited time, provide energy when the electrical load exceeds the output of the generator.

Carrier and Hold-Down

The battery carrier should be in good condition so that it will support the battery securely and keep it level. Before installing the battery, the battery carrier and hold-down clamp should be clean and free from corrosion and make certain there are no parts in carrier.
To prevent the battery from shaking in its carrier, the hold-down bolts should be tight enough but not over-tightened.

Electrolyte Freezing

The freezing point of electrolyte depends on its specific gravity. Since freezing may ruin a battery, it should be protected against freezing by keeping it in a fully charged condition. If a battery is frozen accidentally, it should not be charged until it is warmed.

Sulfation

If the battery is allowed to stand for a long period in discharged condition, the lead sulfate becomes converted into a hard, crystalline substance, which will not easily turn back to the active material again during the subsequent recharging. “Sulfation” means the result as well as the process of that reaction. Such a battery can be revived by very slow charging and may be restored to usable condition but its capacity is lower than before.

Built-In Indicator (If Equipped)

The battery has a built-in temperature compensated indicator in the top of the battery. This indicator is to be used with the following diagnostic procedure. When checking the indicator, make sure that the battery has a clean top. A light may be needed in some poorly-lit areas.
Three types of indication available under normal operation are as follows.

- **Green dot**
  Battery is sufficiently charged for testing.
- **Dark**
  Battery must be charged before testing. If there is a cranking complaint, battery should be tested as described in “Battery Inspection”. Charging and electrical systems should also be checked at this time.
- **Clear or light yellow**
  This means that fluid level is below the bottom of hydrometer. Its possible cause is excessive or prolonged charging, a broken case, excessive tipping or normal battery deterioration. When the battery is found in such condition, it is possible that high charging voltage is caused by the faulty charging system and therefore, charging and electrical systems need to be checked. If there is a trouble in cranking and its cause lies in the battery, it should be replaced.

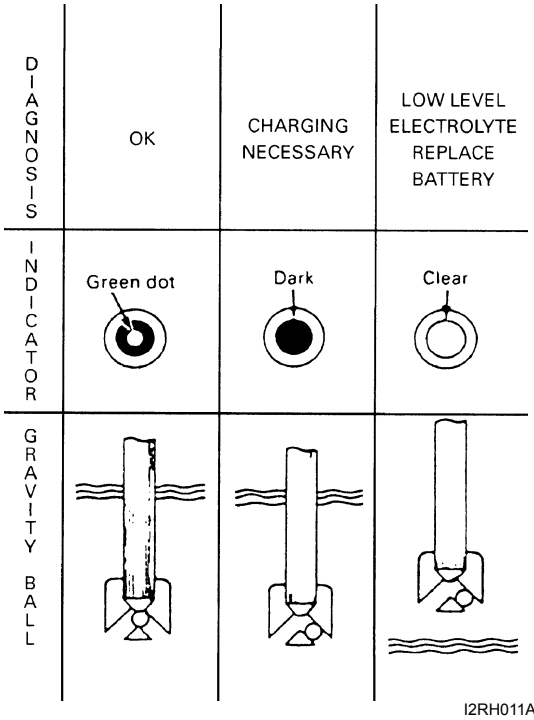

I2RH011A0001-01

Care of battery

⚠ WARNING

- **Never expose battery to open flame or electric spark because of battery generate gas which is flammable and explosive.**
- **Do not allow battery fluid to contact eyes, skin, fabrics, or painted surfaces as fluid is a corrosive acid. Flush any contacted area with water immediately and thoroughly.**
- **Batteries should always be kept out of reach of children.**

1) The battery is a very reliable component, but needs periodical attentions.
   - Keep the battery carrier clean.
   - Prevent rust formation on the terminal posts.
   - Keep the electrolyte up to the upper level uniformly in all cells.
   - When keeping battery on vehicle over a long period of time, follow instructions given below.
     – Weekly, start the engine and run it until it reaches normal operating temperature with engine speed of 2000 to 3000 rpm. Make sure all electric switches are off before storing the vehicle.
     – Recharge the battery twice a month to prevent it from discharging excessively. This is especially important when ambient temperature is low.
       The battery discharges even when it is not used, while vehicles are being stored. Battery electrolyte can freeze and battery case can crack at cold ambient condition if battery is not properly charged.
2) Keep the battery cable connections clean.
   The cable connections, particularly at the positive (+) terminal post, tend to become corroded. The product of corrosion, or rust, on the mating faces of conductors resists the flow of current.
   Clean the terminals and fittings periodically to ensure good metal-to-metal contact, and grease the connections after each cleaning to protect them against rusting.
3) Be always in the know as to the state of charge of the battery. The simplest way to tell the state of charge is to carry out a hydrometer test. The hydrometer is an instrument for measuring the specific gravity (S.G.) of the battery electrolyte. The S.G. of the electrolyte is indicative of the state of charge. Refer to “Battery Inspection”.

Generator Description

S7RW0A1A01002

The basic charging system is the IC integral regulator charging system. The internal components are connected electrically as shown below.

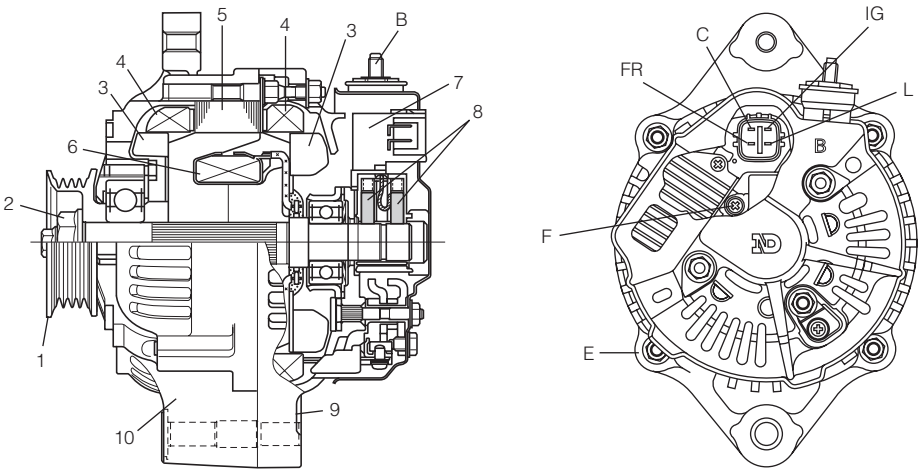

I6RW0D1A0002-01

1. Pulley	6. Field coil	B: Generator output (Battery terminal)	L: Lamp terminal
2. Pulley nut	7. Regulator	C: Generator cut	FR: Field duty monitor
3. Rotor fan	8. Brush	E: Ground	
4. Stator coil	9. Rear end frame	F: Field coil terminal	
5. Stator core	10. Drive end frame	IG: Ignition terminal	

Charging System Circuit

The generator features a solid state regulator that is mounted inside the generator. All regulator components are enclosed into a solid mold, and this unit along with the brush holder assembly is attached to the rear housing. The regulator voltage is being controlled by ECM under some conditions while driving. Refer to “Generator Control System Description in Section 1A” in related manual.

The generator rotor bearings contain enough grease to eliminate the need for periodic lubrication.

Two brushes carry current through the two slip rings to the field coil mounted on the rotor, and under normal conditions will provide long period of attention-free service.

The stator windings are assembled inside a laminated core that forms part of the generator frame.

A rectifier bridge connected to the stator windings contains diodes, and electrically changes that stator AC. voltages to a D.C. voltage which appears at the generator output terminal.

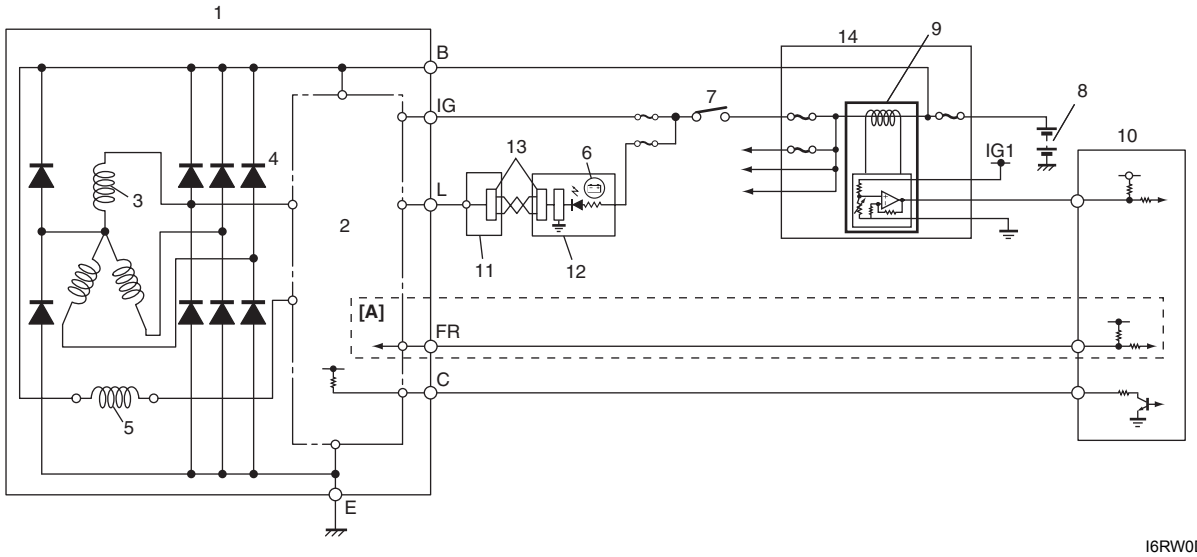

I6RW0D1A0001-03

[A]: If equipped with electric load current sensor	4. Diode	8. Battery	12. Combination meter
1. Generator with regulator assembly	5. Field coil (rotor coil)	9. Electric load current sensor (if equipped)	13. CAN driver
2. I.C. regulator	6. Charge indicator light	10. ECM	14. Main fuse box
3. Stator coil	7. Main switch	11. BCM	

Diagnostic Information and Procedures

Battery Inspection

S7RW0A1A04001

Common Causes of Failure

A battery is not designed to last indefinitely; however, with proper care, it will provide many years of service. If the battery performs satisfactorily during test buy fails to operate properly for no apparent reason, the following are some factors that may point to the cause of trouble:

- Accessories left on overnight or for an extended period without the generator operating.
- Slow average driving speed for short periods.
- Electrical load exceeding generator output particularly with addition of aftermarket equipment.
- Defects in charging system such as high resistance, slipping drive belt, loose generator output terminal, faulty generator or voltage regulator. Refer to “Generator Symptom Diagnosis”.
- Battery abuse, including failure to keep battery cable terminals clean and tight or loose battery hold down.
- Mechanical problems in electrical system such as shorted or pinched wires.

Visual Inspection

Check for obvious damage, such as cracked or broken case or cover, that could permit loss of electrolyte. If obvious damage is noted, replace battery. Determine cause of damage and correct as needed.

Generator Symptom Diagnosis

S7RW0A1A04002

⚠ **CAUTION**

- **Do not mistake polarities of “IG” terminal and “L” terminal.**
- **Do not create short circuit between “IG” and “L” terminals. Always connect these terminals through a lamp.**
- **Do not connect any load between “L” and “E” terminals.**
- **When connecting charger or booster battery to vehicle battery, refer to “Jump Starting in Case of Emergency”.**

Trouble in charging system will show up as one or more of the following conditions:

1) Faulty indicator lamp operation.
2) An undercharged battery as evidenced by slow cranking or indicator dark.
3) An overcharged battery as evidenced by excessive spewing of electrolyte from vents.

Noise from generator may be caused by loose drive pulley, loose mounting bolts, worn or dirty bearings, defective diode, or defective stator.

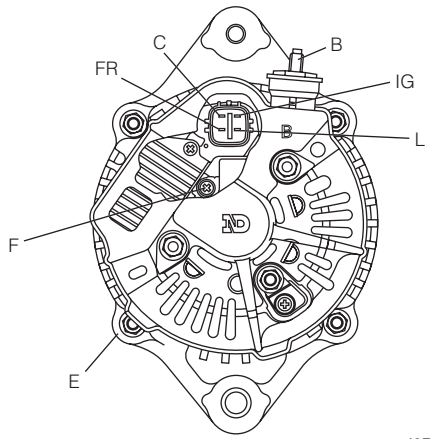

I6RW0D1A0003-01

B: Generator output (Battery terminal)	IG: Ignition terminal
C: C terminal	L: Lamp terminal
E: Ground	FR: Field duty monitor
F: Field coil terminal	

Charging Indicator Lamp Operation

Condition	Possible cause	Correction / Reference Item
Charge light does not light with ignition ON and engine off	Fuse blown	*Check fuse.*
	Indicator lamp (LED) faulty	*Check BCM, combination meter and/or CAN communication line.*
	Wiring connection loose	*Tighten loose connection.*
	IC regulator or field coil faulty	*Check generator.*
	Poor contact between brush and slip ring	*Repair or replace.*
Charge light does not go out with engine running (battery requires frequent recharging)	Drive belt loose or worn	*Adjust or replace drive belt.*
	IC regulator or generator faulty	*Check charging system.*
	Wiring faulty	*Repair wiring.*

Generator Test (Undercharged Battery Check)

S7RW0A1A04003

This condition, as evidenced by slow cranking or low specific gravity can be caused by one or more of the following conditions even though indicator lamp may be operating normal. The following procedure also applies to cars with voltmeter and ammeter.

- Make sure that undercharged condition has not been caused by accessories left on for extended period of time.
- Check drive belt for proper tension.
- If battery defect is suspected, refer to “Battery Description”.
- Inspect wiring for defects. Check all connections for tightness and cleanliness, battery cable connections at battery, starting motor and ignition ground cable.

No-Load Check

1) Connect voltmeter and ammeter as shown in figure.

NOTE

Use fully charged battery.

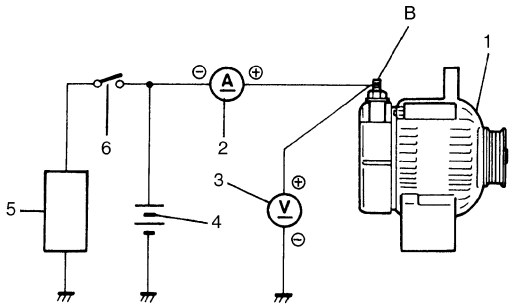

I2RH011A0006-01

1. Generator	4. Battery
2. Ammeter (between generator “B” terminal and battery (+) terminal)	5. Load
3. Voltmeter (between generator “B” terminal and ground)	6. Switch

2) Run engine from idling up to 2,000 rpm with all accessories turned off and read meters.
If voltage is higher than standard value, check ground of brushes.
If brushes are not grounded, replace IC regulator.
If voltage is lower than standard value, proceed to the following check.

Specification for undercharged battery (No-load check)
Current: 10 A
Voltage: 14.2 – 14.8 V at Hi (H) (at 25 °C, 77 °F)
Voltage: 12.5 – 13.1 V at Lo (L) (at 25 °C, 77 °F)

NOTE

Consideration should be taken that voltage will differ somewhat with regulator case temperature as shown in figure.

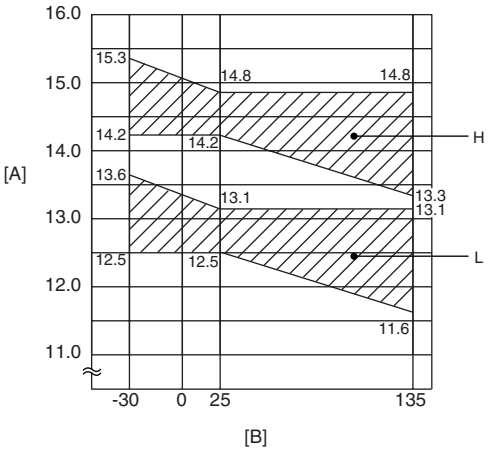

I2RH0B1A0005-01

[A]:	Regulated voltage (V)
[B]:	Heatsink temperature (°C)

3) Ground “F” terminal and start engine, then measure voltage at “B” terminal as shown in figure.
- Voltage is higher than standard value. It is considered that generator itself is good but IC regulator has been damaged, replace IC regulator.
- Voltage is lower than standard value. It is considered that generator itself has problem, check the generator.

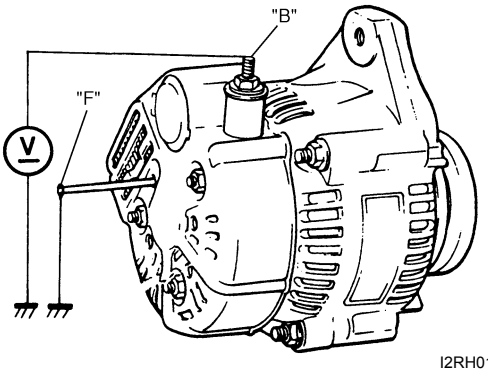

I2RH011A0008-01

Load Check

1) Run engine at 2,000 rpm and turn on head light and heater motor.
2) Measure current and if it is less than 20 A, repair or replace generator.

Generator Test (Overcharged Battery Check)

S7RW0A1A04004

1) To determine battery condition, refer to “Battery Description”.
2) If obvious overcharged condition exists as evidenced by excessive spewing of electrolyte, measure generator “B” terminal voltage at engine 2000 rpm.
3) If measured voltage is higher than upper limit value, disassemble generator.
4) Check ground of brushes. If brushes are not grounded, replace IC regulator. Then check field coil for grounds and shorts.

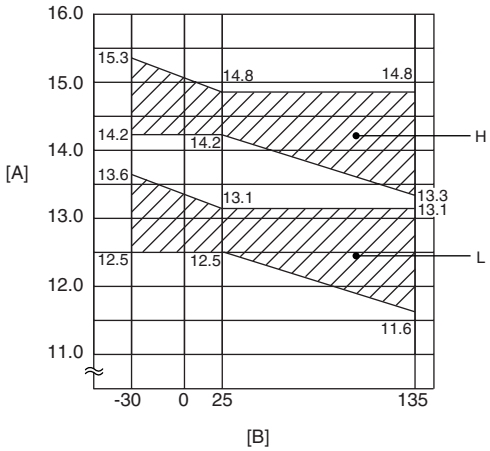

I2RH0B1A0005-01

[A]:	Regulated voltage (V)
[B]:	Heatsink temperature (°C)

Repair Instructions

Jump Starting in Case of Emergency

S7RW0A1A06001

With Auxiliary (Booster) Battery

⚠ CAUTION

If vehicle is manual transaxle model and has a catalytic converter, do not push or tow it to start. Damage to its emission system and/or to other parts may result.

Both booster and discharged battery should be treated carefully when using jumper cables. Follow the procedure outlined as follows, being careful not to cause sparks.

⚠ WARNING

- **Departure from these conditions or procedure described as follows could result in:**
  - **Serious personal injury (particularly to eyes) or property damage from such causes as battery explosion, battery acid, or electrical burns.**
  - **Damage to electronic components of either vehicle.**
- **Remove rings, watches, and other jewelry. Wear approved eye protection.**
- **Be careful so that metal tools or jumper cables do not contact positive battery terminal (or metal in contact with it) and any other metal on vehicle, because a short circuit could occur.**
- **Do not connect negative cable directly to negative terminal of dead battery.**

1) Set parking brake and place automatic transaxle in PARK (NEUTRAL on manual transaxle). Turn off ignition, turn off lights and all other electrical loads.
2) Check electrolyte level. If it is below low level line, add distilled water.
3) Attach end of one jumper cable to positive terminal of booster battery and the other end of the same cable to positive terminal of discharged battery. (Use 12-volt battery only to jump start engine).
4) Attach one end of the remaining negative cable to negative terminal of booster battery, and the other end to a solid engine ground (such as exhaust manifold) at least 45 cm (18 in.) away from battery of vehicle being started.
5) Start engine of vehicle with booster battery and turn off electrical accessories. Then start engine of the vehicle with discharged battery.
6) Disconnect jumper cables in the exact reverse order.

With Charging Equipment

⚠ CAUTION

When jump starting engine with charging equipment, be sure equipment used is 12-volt and negative ground. Do not use 24-volt charging equipment. Using such equipment can cause serious damage to electrical system or electronic parts.

Battery Dismounting and Remounting

S7RW0A1A06002

Dismounting

1) Disconnect negative cable (3).
2) Disconnect positive cable (2).
3) Remove retainer (4).
4) Remove battery (1).

Handling

When handling battery, the following safety precautions should be followed:

- Hydrogen gas is produced by battery. A flame or spark near battery may cause the gas to ignite.
- Battery fluid is highly acidic. Avoid spilling on clothing or other fabric. Any spilled electrolyte should be flushed with large quantity of water and cleaned immediately.

Remounting

1) Reverse removal procedure.
2) Tighten battery cables securely.

NOTE

Check to be sure that ground cable has enough clearance to hood panel by terminal.

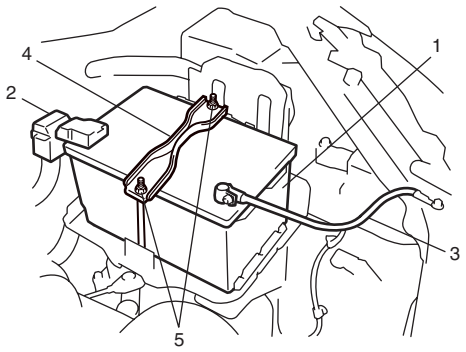

I7RW011A0005-01

1. Battery	4. Retainer
2. Positive cable	5. Nut
3. Negative cable	

Water Pump / Generator Drive Belt Tension Inspection and Adjustment

S7RW0A1A06003

⚠ WARNING

- **Disconnect negative cable at battery before checking and adjusting belt tension.**
- **To help avoid danger of being burned, do not remove radiator cap while engine and radiator are still hot. Scalding fluid and steam can be blown out under pressure if cap is taken off too soon.**

1) Inspect belt for cracks, cuts, deformation, wear and cleanliness. If it is necessary to replace belt, refer to "Water Pump / Generator Drive Belt Removal and Installation".
2) Check belt for tension. Belt is in proper tension when it deflects the following specification under thumb pressure (about 10kg or 22 lb.).
   If belt tension is out of specification, go to next steps.

   Water pump / generator drive belt tension "a"
   Existing belt: 4.5 – 5.5 mm (0.18 – 0.22 in.) as deflection / 10 kg (22 lbs)
   New belt: 4.0 – 4.5mm (0.16 – 0.18 in.) as deflection / 10 kg (22 lbs)

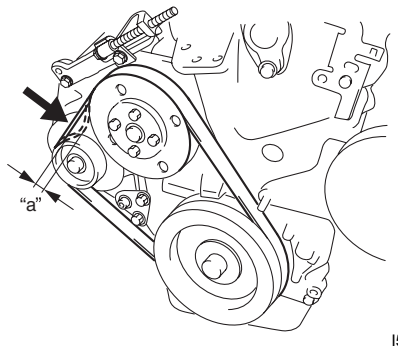

I5RW0C160006-01

3) After loosening generator bracket bolts (2) and pivot bolt (3), adjust belt tension to specification described at step 2) by loosening / tightening generator adjust bolt (1).
4) Tighten generator bracket bolts and pivot bolt as specified torque.

   Tightening torque
   Generator bracket bolt (a): 25 N·m (2.5 kgf-m, 18.0 lb-ft)
   Generator pivot bolt (b): 50 N·m (5.0 kgf-m, 36.0 lb-ft)

5) Check belt tension for specification after turning crankshaft two rotations clockwise.
6) Tighten generator adjusting bolt (1) as specified torque.

   Tightening torque
   Generator adjusting bolt (c): Tighten 7.0 N·m (0.7 kgf-m, 5.0 lb-ft) by the specified procedure.

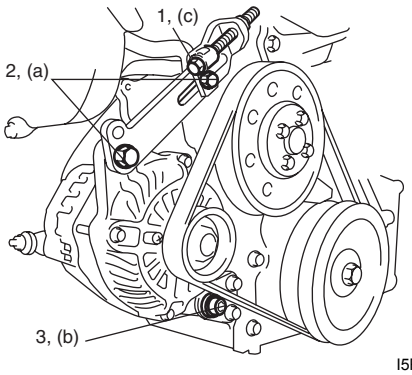

I5RW0C160007-01

7) Connect negative cable at battery.

Water Pump / Generator Drive Belt Removal and Installation

S7RW0A1A06004

Removal

1) Disconnect negative cable at battery.
2) If vehicle equipped with A/C, remove compressor drive belt before removing water pump belt (1). Refer to “Compressor Drive Belt Removal and Installation: Manual Type in Section 7B” or “Compressor Drive Belt Removal and Installation: Automatic Type in Section 7B”.
3) Loosen generator bracket bolts (2) and generator pivot bolt (3).
4) Loosen generator adjusting bolt (4), and then remove water pump belt.

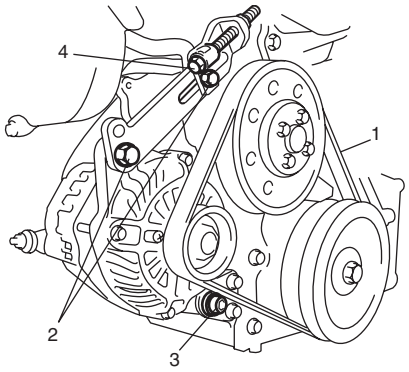

I5RW0C160008-01

installation

1) Install belt (1) to water pump pulley (2), crankshaft pulley (3) and generator pulley (4).
2) Adjust belt tension referring to “Water Pump / Generator Drive Belt Tension Inspection and Adjustment”.
3) If vehicle equipped with A/C, install compressor drive belt referring to “Compressor Drive Belt Removal and Installation: Manual Type in Section 7B” or “Compressor Drive Belt Removal and Installation: Automatic Type in Section 7B”.

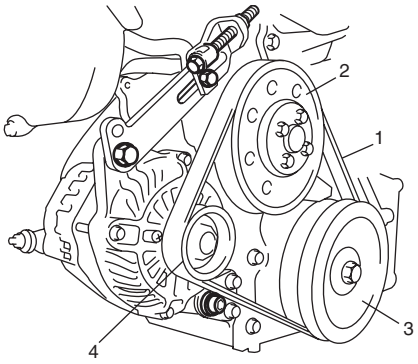

I5RW0C160009-01

4) Connect negative cable at battery.

Generator Dismounting and Remounting

S7RW0A1A06005

1) Disconnect negative cable at battery.
2) Remove right side drive shaft referring to “Front Drive Shaft Assembly Removal and Installation: Front in Section 3A”
3) Dismount in numerical order as shown in figure.
4) Reverse dismounting procedure for remounting.

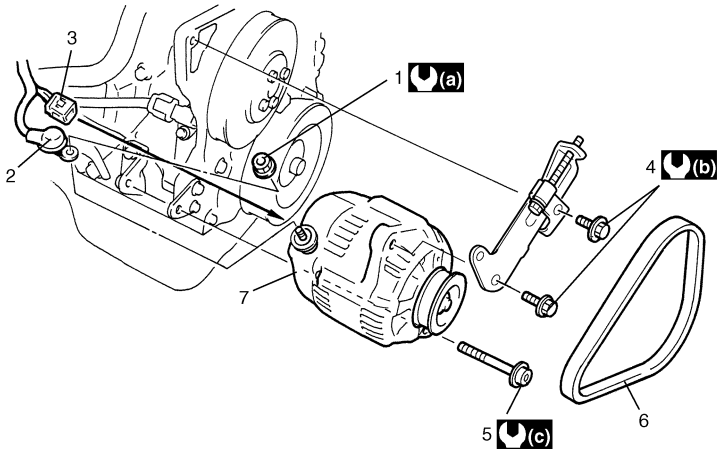

I6RW0D1A0004-01

1. “B” terminal nut	5. Generator pivot bolt	(b) : 25 N·m (2.5 kgf-m, 18.0 lb-ft)
2. “B” terminal wire	6. Generator drive belt	(c) : 50 N·m (5.0 kgf-m, 36.0 lb-ft)
3. Connector	7. Generator	
4. Generator bracket bolt	(a) : 5.0 N·m (0.5 kg·m, 4.0 lb-ft)	

Generator Components

S7RW0A1A06006

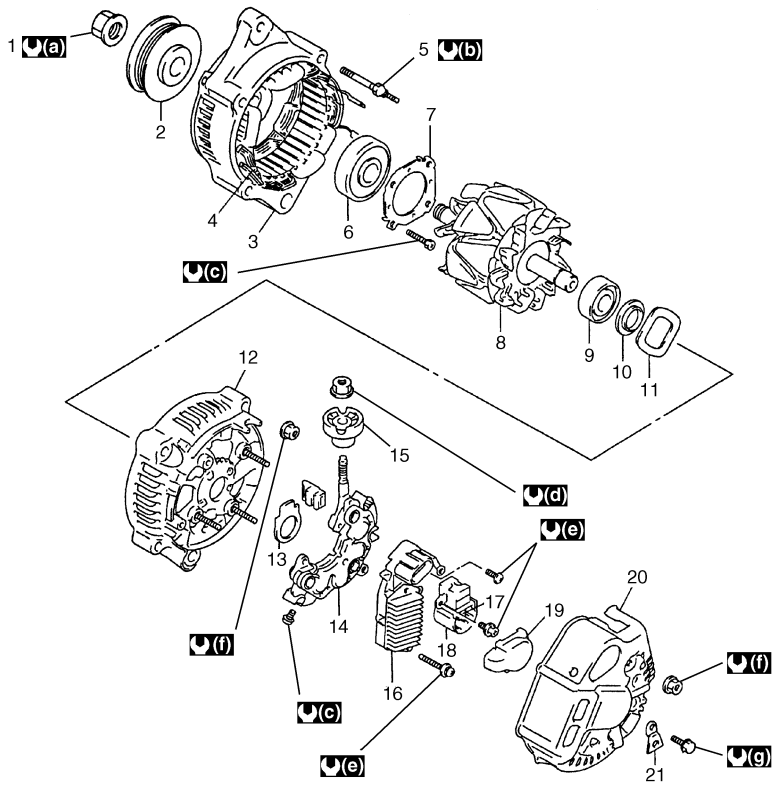

I4RS0A1A0004-01

1. Pulley nut	8. Rotor	15. Insulator	(a) : 111 N·m (11.1 kgf-m, 80.5 lb-ft)
2. Pulley	9. End housing bearing	16. Regulator	(b) : 9.8 N·m (0.98 kgf-m, 7.0 lb-ft)
3. Drive end frame	10. Bearing cover	17. Brush	(c) : 3.0 N·m (0.3 kgf-m, 2.5 lb-ft)
4. Stator	11. Wave washer	18. Brush holder	(d) : 3.6 N·m (0.36 kgf-m, 3.0 lb-ft)
5. Stud bolt	12. Rear end frame	19. Brush holder cover	(e) : 2.0 N·m (0.2 kgf-m, 1.5 lb-ft)
6. Drive end bearing	13. Seal plate	20. Rear end cover	(f) : 4.5 N·m (0.45 kgf-m, 3.5 lb-ft)
7. Bearing retainer	14. Rectifier	21. Terminal plate	(g) : 3.8 N·m (0.38 kgf-m, 3.0 lb-ft)

Generator Inspection

S7RW0A1A06007

Rotor

1) Using ohmmeter, connect positive terminal to “FR” terminal and connect negative terminal to “B” terminal of generator, check that continuity between “B” terminal and “FR” terminal. If there is no continuity, replace rotor or regulator.

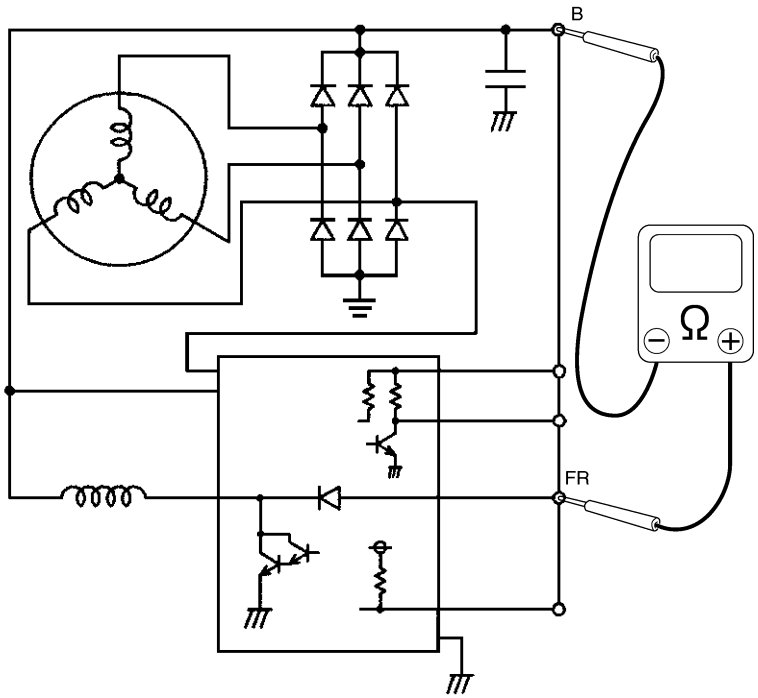

I5JB0A1A0012-01

2) Using an ohmmeter, check for continuity between slip rings of rotor. If there is no continuity, replace the rotor.

<u>Standard resistance between slip rings of rotor</u>
2.7 – 3.1 Ω at 20 °C (68 °F)

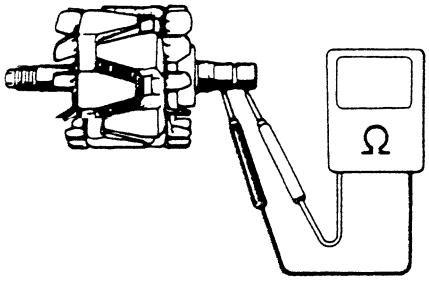

IYSQ011A0042-01

3) Using an ohmmeter, check that there is no continuity between slip ring and rotor. If there is continuity, replace the rotor.

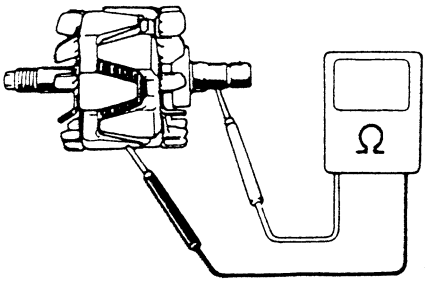

IYSQ011A0043-01

4) Check slip rings for roughness or scoring. If rough or scored, replace the rotor.
   Using a vernier caliper, measure the slip ring diameter. If the diameter is less than minimum, replace the rotor.

   Slip ring diameter
   Standard: 14.2 – 14.4 mm (0.560 – 0.566 in.)
   Limit: 12.8 mm (0.503 in.)

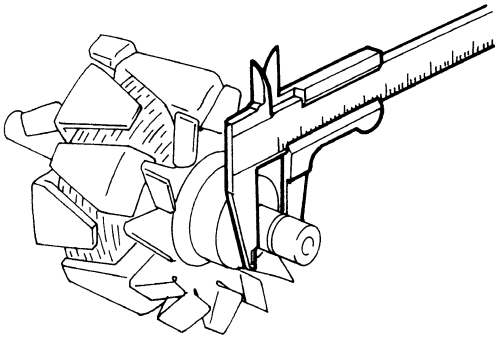

IYSQ011A0044-01

Stator

1) Using an ohmmeter, check all leads for continuity. If there is no continuity, replace the stator.

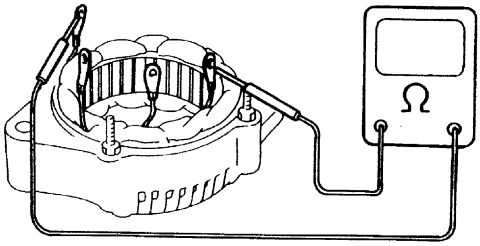

I2RH011A0014-01

2) Using an ohmmeter, check that there is no continuity between coil leads and stator core. If there is continuity, replace the stator.

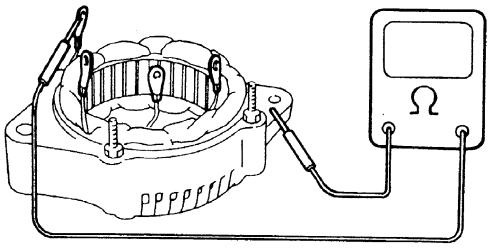

I2RH011A0015-01

Brush and Brush Holder

Check each brush for wear by measuring its length as shown. If the brush is found worn down to service limit, replace the brush.

Exposed brush length "a"
Standard: 10.5 mm (0.41 in.)
Limit: 1.5 mm (0.05 in.)

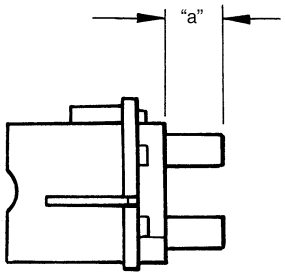

IYSQ011A0047-01

Rectifier

1) Using an ohmmeter, connect one tester probe to the "B" terminal (1) and the other to each rectifier terminal (2).

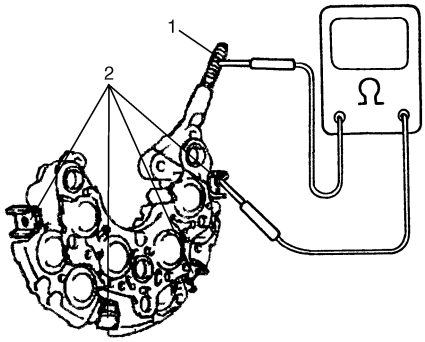

I1JA011A0002-01

2) Reverse the polarity of the tester probes and repeat Step 1).
3) Check that one shows continuity and the other shows no continuity.
   If there is continuity, replace the rectifier.
4) Using an ohmmeter, connect one tester probe to each negative terminal (1) and the other to each rectifier terminal (2).

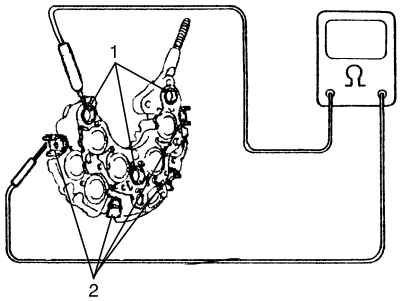

I2RH011A0017-01

5) Reverse the polarity of the tester probes and repeat Step 4).
6) Check that one shows continuity and the other shows no continuity.
   If there is continuity, replace the rectifier.

Specifications

Charging System Specifications

S7RW0A1A07001

Battery

NOTE

The battery used in each vehicle is one of the following two types, depending on specification.

Battery type		46B24R	55B24R
Rated capacity	AH/5HR, 12 Volts	40.6	42.5
Electrolyte	L (US / Imp pt.)	—	2.8 (5.92 / 4.93)

Battery
: 46B24R (40.6AH/5HR), 55B24R (42.5AH/5HR) 12V

Generator

Type	70 A type
Rated voltage	12 V
Nominal output	70 A
Permissible max. speed	18,000 r/min.
No-load speed	1020 r/min. (rpm)
Regulated voltage	14.2 – 14.8 V (Hi), 12.5 – 13.1 V (Lo)
Exposed brush length	Standard: 10.5 mm (0.41 in.) Limit: 1.5 mm (0.05 in.)
Permissible ambient temperature	–30 to 90 °C (–22 to 194 °F)
Polarity	Negative ground
Rotation	Clockwise viewed from pulley side

Tightening Torque Specifications

S7RW0A1A07002

Fastening part	Tightening torque			Note
	N·m	kgf-m	lb-ft	
Generator bracket bolt	25	2.5	18.0	☞
Generator pivot bolt	50	5.0	36.0	☞
Generator adjusting bolt	Tighten 7.0	0.7	5.0	by the specified procedure. ☞

NOTE

The specified tightening torque is also described in the following.
“Generator Dismounting and Remounting”
“Generator Components”

Reference:
For the tightening torque of fastener not specified in this section, refer to “Fasteners Information in Section 0A”.

Exhaust System

General Description

Exhaust System Description

S7RW0A1B01001

The exhaust system consists of an exhaust manifold, three-way catalytic converter (TWC) in catalyst case, exhaust pipes, a muffler and seals, gasket and etc.
The three-way catalytic converter is an emission control device added to the exhaust system to lower the levels of Hydrocarbon (HC), Carbon Monoxide (CO), and Oxides of Nitrogen (NOx) pollutants in the exhaust gas.

Diagnostic Information and Procedures

Exhaust System Check

S7RW0A1B04001

⚠ WARNING

To avoid the danger of being burned, do not touch the exhaust system when the system is hot. Any service on the exhaust system should be performed when the system is cool.

At every interval of periodic maintenance service, and when vehicle is raised for other service, check exhaust system as follows:

- Check rubber mountings for damage, deterioration, and out of position.

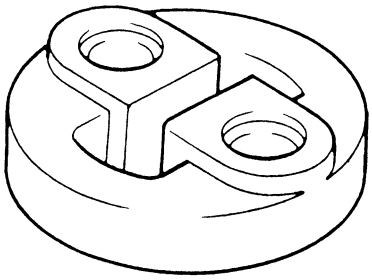

IYSY011B0003-01

- Check exhaust system for leakage, loose connection, dent and damage.
- If bolts or nuts are loosened, tighten them to specified torque referring to “Exhaust System Components”.
- Check nearby body areas damaged, missing, or mispositioned part, open seam, hole connection or any other defect which could permit exhaust fumes to seep into vehicle.
- Make sure that exhaust system components have enough clearance from underbody to avoid overheating and possible damage to vehicle underbody.
- Any defect should be fixed at once.

Repair Instructions

Exhaust System Components

S7RW0A1B06001

⚠ WARNING

To avoid the danger of being burned, do not touch the exhaust system when the system is hot. Any service on the exhaust system should be performed when the system is cool.

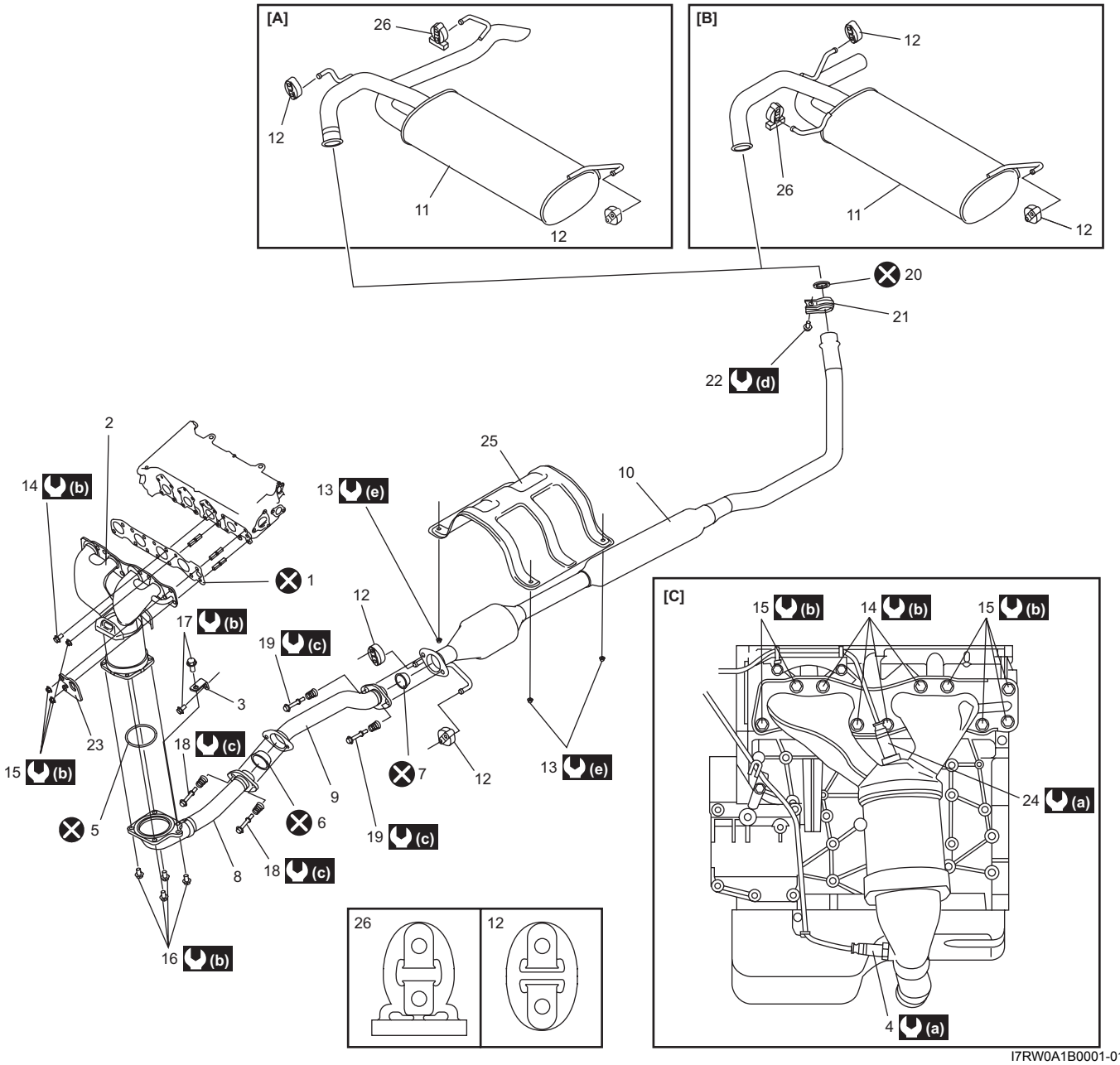

I7RW0A1B0001-01

[A]: Sedan model	10. Exhaust center pipe	22. Exhaust pipe clamp bolt
[B]: Hatchback model	11. Muffler	23. Engine hook
[C]: Installing location of exhaust manifold bolt and nut.	12. Mounting No.1	24. HO2S-1 (connector color: black)
1. Exhaust manifold gasket	13. Heat insulator nut	25. Heat insulator
2. Exhaust manifold	14. Exhaust manifold bolt	26. Mounting No.2
3. Exhaust manifold stiffener	15. Exhaust manifold nut	(a) : 45 N·m (4.5 kgf-m, 32.5 lb-ft)
4. HO2S-2 (connector color: green)	16. Exhaust No.1 pipe bolt	(b) : 50 N·m (5.0 kgf-m, 36.5 lb-ft)
5. Exhaust pipe No.1 gasket	17. Exhaust manifold stiffener bolt	(c) : 43 N·m (4.3 kgf-m, 31.0 lb-ft)
6. No.1 seal ring	18. Exhaust No.2 pipe bolt	(d) : 29 N·m (2.9 kgf-m, 21.0 lb-ft)
7. No.2 seal ring	19. Exhaust center pipe bolt	(e) : 2 N·m (0.2 kgf-m, 1.5 lb-ft)
8. Exhaust No.1 pipe	20. Exhaust pipe No.2 gasket	⊗ : Do not reuse.

9. Exhaust No.2 pipe	21. Exhaust pipe clamp	

Exhaust Manifold Removal and Installation

S7RW0A1B06002

Removal

⚠ WARNING

To avoid danger of being burned, do not service exhaust system while it is still hot. Service should be performed after system cools down.

1) Disconnect negative cable at battery.
2) Disconnect HO2S-1 connector (1) (connector color: black) and HO2S-2 connector (2) (connector color: green), and then detach it from its stay.

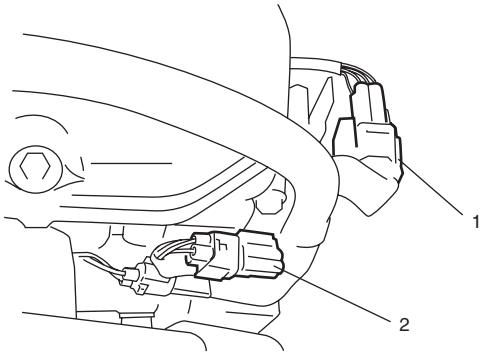

I5RW0C1B0002-01

3) Remove exhaust manifold stiffener (1).
4) Remove HO2S-2 (3) from exhaust manifold and exhaust No.1 pipe, if necessary.
5) Disconnect exhaust No.1 pipe (2) from exhaust manifold.

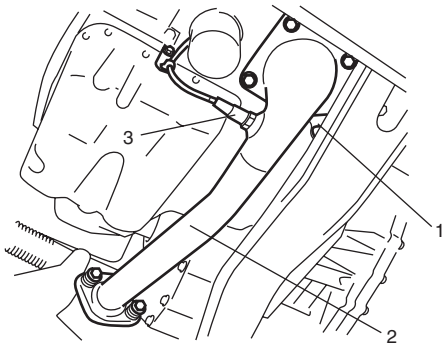

I5RW0A1B0003-01

6) Remove exhaust manifold (1) and its gasket from cylinder head.

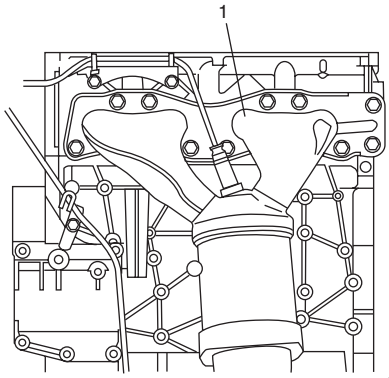

I5RW0A1B0004-01

Installation

1) Install new gasket to cylinder head. Then install exhaust manifold.
   Tighten manifold bolts (1) and nuts (2) to specified torque.

   Tightening torque
   Exhaust manifold bolt (a): 50 N·m (5.0 kgf-m, 36.5 lb-ft)
   Exhaust manifold nut (b): 50 N·m (5.0 kgf-m, 36.5 lb-ft)

   NOTE

   Be sure to install exhaust manifold bolts and nuts to proper location as shown in figure.

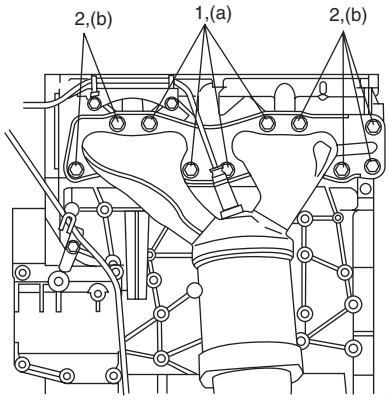

I5RW0A1B0005-01

2) Install new seal ring and connect exhaust No.1 pipe (1) to exhaust manifold.
   Tighten pipe fasteners to specified torque.

   Tightening torque
   Exhaust No.1 pipe bolt (a): 50 N·m (5.0 kgf-m, 36.5 lb-ft)

3) Install exhaust manifold stiffener (2).
Tighten exhaust manifold stiffener bolts to specified torque.

Tightening torque
Exhaust manifold stiffener bolt (b): 50 N·m (5.0 kgf-m, 36.5 lb-ft)

4) Install new seal ring and connect exhaust No.1 pipe (1) to exhaust No.2 pipe. Tighten pipe fasteners to specified torque.

Tightening torque
Exhaust No.2 pipe bolt (c): 43 N·m (4.3 kgf-m, 31.0 lb-ft)

5) Install HO2S-2 (3) and tighten HO2S-2 bracket bolt (4) referring to “Exhaust System Components”, if removed.

NOTE

Be sure to identify HO2S-1 and HO2S-2 by its connector color referring to “Exhaust System Components”.

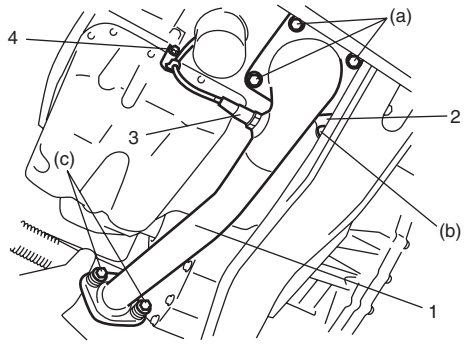

I5RW0A1B0006-01

6) Connect HO2S-1 connector (1) (connector color: black) and HO2S-2 connector (2) (connector color: green), and then fit coupler to bracket securely.

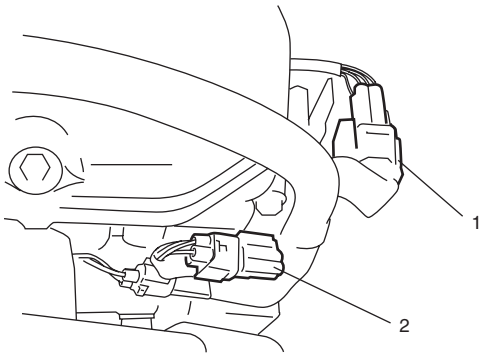

I5RW0C1B0002-01

7) Connect negative cable at battery.
8) Check exhaust system for exhaust gas leakage.

Exhaust Pipe and Muffler Removal and Installation

S7RW0A1B06003

For replacement of exhaust pipe, be sure to hoist vehicle and observe WARNING under “Exhaust System Components” and the following.

⚠ CAUTION

Exhaust manifold have three way catalytic converter in it, it should not be exposed to any impulse.
Be careful not to drop it or hit it against something.

- Tighten bolts and nuts to specified torque when reassembling. Refer to “Exhaust System Components”.
- After installation, start engine and check each joint of exhaust system for leakage.

Specifications

Tightening Torque Specifications

S7RW0A1B07001

Fastening part	Tightening torque			Note
	N·m	kgf-m	lb-ft	
Exhaust manifold bolt	50	5.0	36.5	☞
Exhaust manifold nut	50	5.0	36.5	☞
Exhaust No.1 pipe bolt	50	5.0	36.5	☞
Exhaust manifold stiffener bolt	50	5.0	36.5	☞
Exhaust No.2 pipe bolt	43	4.3	31.0	☞

NOTE

The specified tightening torque is also described in the following.
“Exhaust System Components”

Reference:
For the tightening torque of fastener not specified in this section, refer to “Fasteners Information in Section 0A”.

Section 2

Suspension

CONTENTS

Precautions 2-1
Precautions 2-1
Precautions on Suspension 2-1

Suspension General Diagnosis 2A-1
Diagnostic Information and Procedures 2A-1
Suspension, Wheels and Tires Symptom Diagnosis 2A-1

Front Suspension 2B-1
General Description 2B-1
Front Suspension Construction 2B-1
Front Wheel Alignment Construction 2B-2
Repair Instructions 2B-2
Front Wheel Alignment Inspection and Adjustment 2B-2
Camber and Caster Check 2B-3
Steering Angle Check and Adjustment 2B-4
Front Strut Assembly Components 2B-4
Front Strut Assembly Removal and Installation 2B-5
Front Strut Assembly Disassembly and Reassembly 2B-6
Front Strut Assembly Check 2B-7
Front Wheel Hub and Steering Knuckle Components 2B-8
Front Wheel Hub, Steering Knuckle and Wheel Bearing Removal and Installation 2B-8
Front Wheel Bearing and Wheel Hub Inspection 2B-12
Suspension Control Arm Removal and Installation 2B-13
Suspension Control Arm Bush Disassembly and Assembly 2B-13
Suspension Control Arm / Steering Knuckle Check 2B-14
Suspension Control Arm Bush Inspection 2B-14
Suspension Control Arm Joint Check 2B-14
Front Suspension Frame, Stabilizer Bar and/or Bush Components 2B-15
Front Suspension Frame, Stabilizer Bar and/or Bush Removal and Installation 2B-15
Front Suspension Frame Check 2B-18
Front Stabilizer Bar, Bush and/or Joint Check 2B-18
Front Suspension Fasteners Check 2B-18
Specifications 2B-19
Tightening Torque Specifications 2B-19
Special Tools and Equipment 2B-20
Recommended Service Material 2B-20
Special Tool 2B-20

Rear Suspension 2C-1
Repair Instructions 2C-1
Rear Suspension Components 2C-1
Rear Wheel Alignment Inspection 2C-2
Rear Shock Absorber Removal and Installation 2C-2
Rear Shock Absorber Inspection 2C-4
Rear Shock Absorber Bush Inspection 2C-4
Rear Coil Spring Removal and Installation 2C-4
Spring Upper Seat / Spring Lower Seat Inspection 2C-6
Rear Axle Removal and Installation 2C-6
Rear Axle and Coil Spring Inspection 2C-7
Rear Axle Bush Inspection 2C-7
Rear Wheel Hub Assembly Inspection 2C-8
Rear Wheel Hub Assembly Removal and Installation 2C-8
Specifications 2C-10
Tightening Torque Specifications 2C-10

Wheels and Tires 2D-1
Precautions 2D-1
Precautions in Wheels and Tires Servicing 2D-1
General Description 2D-1
Tires Description 2D-1
Wheels Description 2D-2
Irregular and/or Premature Wear Description 2D-3
Wear Indicators Description 2D-3
Radial Tire Waddle Description 2D-3
Radial Tire Lead / Pull Description 2D-4
Balancing Wheels Description 2D-4
Repair Instructions 2D-5
Wheel Discs Inspection 2D-5
Wheel Balance Inspection and Adjustment 2D-5
Tire Rotation 2D-5
Wheel (with Tire) Removal and Installation 2D-5
Tire Mounting and Dismounting 2D-6
Tire Repair 2D-6
Specifications 2D-6

Wheels and Tires Specifications 2D-6
Tightening Torque Specifications 2D-6

Precautions

Precautions

Precautions on Suspension

S7RW0A2000001

Suspension Caution
Refer to “Suspension Caution in Section 00”.

Wheels and Tires Caution
Refer to “Wheels and Tires Caution in Section 00”.

General Precautions
Refer to “General Precautions in Section 00”.

Vehicle Lifting Points
Refer to “Vehicle Lifting Points in Section 0A”.

Fastener Caution
Refer to “Fastener Caution in Section 00”.

Fastener Information
Refer to “Fasteners Information in Section 0A”.

Brake Caution
Refer to “Brake Caution in Section 00”.

Suspension General Diagnosis

Diagnostic Information and Procedures

Suspension, Wheels and Tires Symptom Diagnosis

S7RW0A2104001

Condition	Possible cause	Correction / Reference Item
Vehicle pulls (Leads)	Mismatched or uneven tires	*Replace tires.*
	Tires not adequately inflated	*Adjust tire pressure.*
	Broken or sagging coil springs	*Replace coil springs.*
	Radial tire lateral force	*Replace tire.*
	Disturbed wheel alignment	*Check and adjust wheel alignment.*
	Brake dragging in one road wheel	*Repair brake.*
	Loose, bent or broken front or rear suspension parts	*Tighten or replace related suspension parts.*
Abnormal or excessive tire wear	Sagging or broken coil springs	*Replace coil springs.*
	Tire out of balance	*Adjust balance or replace tire.*
	Disturbed wheel alignment	*Check and adjust wheel alignment.*
	Faulty strut (shock absorber)	*Replace strut (shock absorber).*
	Hard driving	*Replace tires.*
	Overloaded vehicle	*Replace tires.*
	Not rotated tires	*Replace or rotate tires.*
	Worn or loose wheel bearings	*Replace wheel bearings.*
	Wobbly wheel or tire	*Replace wheel or tire.*
	Tires not adequately inflated	*Adjust tire pressure.*
	Front suspension frame and/or suspension control arm are transformed	*Check and replace.*
Wheel tramp	Blister or bump on tire	*Replace tire.*
	Improper strut (shock absorber) action	*Replace strut (shock absorber).*
Shimmy, shake or vibration	Tire or wheel out of balance	*Balance wheel or replace tire and/or wheel.*
	Loosen wheel bearings	*Replace wheel bearings.*
	Worn tie-rod ends	*Replace tie-rod ends.*
	Worn lower ball joints	*Replace suspension control arms.*
	Excessive wheel runout	*Repair or replace wheel and/or tire.*
	Blister or bump on tire	*Replace tire.*
	Excessively loaded radial runout of tire / wheel assembly	*Replace tire or wheel.*
	Disturbed wheel alignment	*Check and adjust wheel alignment.*
	Loose or worn steering linkage	*Tighten or replace steering linkage.*
	Loose steering gear case bolts	*Tighten steering gear case bolts.*
Abnormal noise, front end	Worn, sticky or loose tie-rod ends, lower ball joints, tie-rod inside ball joints or drive shaft joints	*Replace tie-rod ends, suspension arms, tie-rods or drive shaft joints.*
	Damaged struts or mountings	*Repair or replace struts or mountings.*
	Worn suspension arm bushes	*Replace suspension arm bushes.*
	Loose stabilizer bar	*Tighten bolts or nuts and/or replace bushes.*
	Loose wheel bolts	*Tighten wheel bolts.*
	Loose suspension bolts or nuts	*Tighten suspension bolts or nuts.*
	Broken or damaged wheel bearings	*Replace wheel bearings.*
	Broken suspension springs	*Replace suspension springs.*
	Worn strut bearings	*Replace strut bearing.*
	Malfunction of Power Steering System	*Check and correct malfunction.*
Low or uneven trim height See NOTE *1.	Broken or sagging coil springs	*Replace coil springs.*
	Over loaded	*Check loading.*
	Incorrect coil springs	*Replace coil springs.*
	Tires not adequately inflated	*Adjust tire pressure.*
Ride too soft	Faulty strut (shock absorber)	*Replace strut (shock absorber).*

Condition	Possible cause	Correction / Reference Item
Suspension bottoms	Overloaded	*Check loading.*
	Faulty strut (shock absorber)	*Replace strut (shock absorber).*
	Incorrect, broken or sagging coil springs	*Replace coil springs.*
Body leans or sways in corners	Loose stabilizer bar	*Tighten stabilizer bar bolts or nuts, or replace bushes.*
	Faulty strut (shock absorber) or mounting	*Replace strut (shock absorber) or tighten mounting.*
	Broken or sagging coil springs	*Replace coil springs.*
	Overloaded	*Check loading.*
Cupped tires	Front struts defective	*Replace struts.*
	Worn wheel bearings	*Replace wheel bearings.*
	Excessive tire or wheel run-out	*Replace tire and/or wheel.*
	Worn ball joints	*Replace suspension control arms.*
	Tire out of balance	*Adjust tire balance.*

NOTE

***1: Right-to-left trim height ("H") difference should be within 15 mm (0.6 in.) with curb weight. (same with rear side.)**

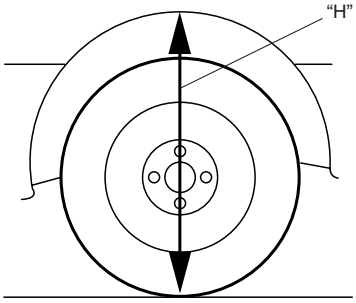

I2RH01210001-01

Front Suspension

General Description

Front Suspension Construction

S7RW0A2201001

⚠ CAUTION

There are two types of front suspension mounting bolt. One is pre-coated with friction stabilizer. The other is not. Never reuse pre-coated bolt to prevent it from loosening. Be sure to replace pre-coated bolt with a new one whenever loosening once.

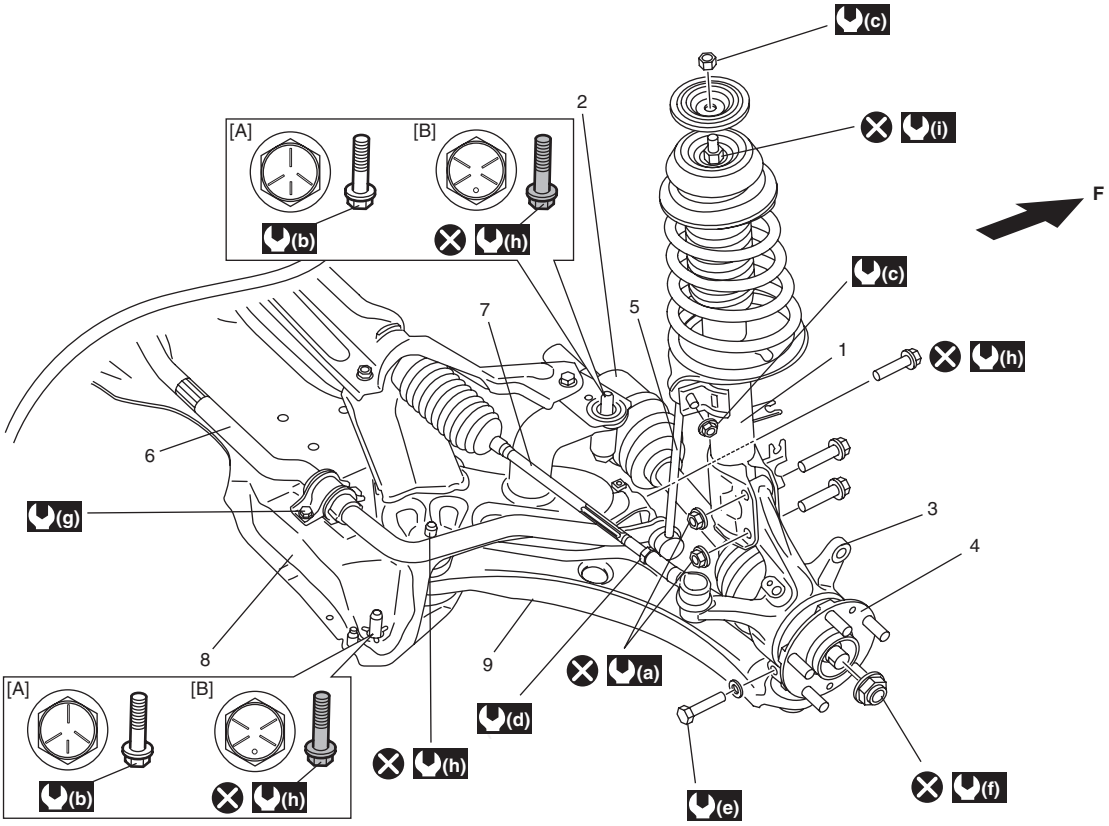

I8RW01220011-03

[A]: Non-pre-coated bolt	7. Tie-rod	(i) : 200 N·m (20.0 kgf-m, 145.0 lb-ft)
[B]: Pre-coated bolt with friction stabilizer	8. Front suspension frame	(g) : 23 N·m (2.3 kgf-m, 17.0 lb-ft)
1. Front strut assembly	9. Suspension control arm	(h) : 95 N·m (9.5 kgf-m, 69.0 lb-ft)
2. Front drive shaft	(a) : 140 N·m (14.0 kgf-m, 101.5 lb-ft)	(i) : 55 N·m (5.5 kgf-m, 40.0 lb-ft)
3. Steering knuckle	(b) : 150 N·m (15.0 kgf-m, 108.5 lb-ft)	⊗ : Do not reuse.
4. Front wheel hub	(c) : 50 N·m (5.0 kgf-m, 36.5 lb-ft)	F: Forward
5. Stabilizer joint	(d) : 45 N·m (4.5 kgf-m, 32.5 lb-ft)	
6. Stabilizer bar	(e) : 60 N·m (6.0 kgf-m, 43.5 lb-ft)	

Front Wheel Alignment Construction

S7RW0A2201002

Among factors for front wheel alignment, only toe setting can be adjusted. Camber and caster are not adjustable. Therefore, should camber or caster be out of specification due to the damage caused by hazardous road conditions or collision, whether the damage is in body or in suspension should be determined and damaged body should be repaired or damaged suspension should be replaced.

Preliminary Checks Prior to Adjustment Front Wheel Alignment

Steering and vibration complaints are not always the result of improper wheel alignment. An additional item to be checked is the possibility of tire lead due to worn or improperly manufactured tires. “Lead” is the vehicle deviation from a straight path on a level road without hand pressure on the steering wheel. Refer to “Radial Tire Lead / Pull Description in Section 2D” in order to determine if the vehicle has a tire lead problem. Before making any adjustment affecting wheel alignment, the following checks and inspections should be made to ensure correctness of alignment readings and alignment adjustments:

- Check all tires for proper inflation pressures and approximately the same tread wear.
- Check for loose of ball joints. Check tie-rod ends; if excessive looseness is noted, it must be corrected before adjusting.
- Check for run-out of wheels and tires.
- Check vehicle trim heights; if it is out of limit and a correction is needed, it must be done before adjusting toe.
- Check for loose of suspension control arms.
- Check for loose or missing stabilizer bar attachments.
- Consideration must be given to excess loads, such as tool boxes. If this excess load is normally carried in vehicle, it should remain in vehicle during alignment checks.
- Consider condition of equipment being used to check alignment and follow manufacturer’s instructions.
- Regardless of equipment used to check alignment, vehicle must be placed on a level surface.

NOTE

To prevent possible incorrect reading of toe, camber or caster, vehicle front and rear end must be moved up and down a few times before inspection.

Repair Instructions

Front Wheel Alignment Inspection and Adjustment

S7RW0A2206001

Toe Inspection and Adjustment

Preparation for toe inspection and adjustment.

- Place vehicle in unloaded state on level surface.
- Set steering wheel in straight state.
- Check that inflation pressure of each tire is adjusted properly and wheel is free from deflection.
- Check that each suspension part is free from bend, dent, wear or damage in any other form.
- Check that ground clearance at the right and left is just about the same.

Inspection

Measure toe with toe-in gauge (1).
If toe is not within specified value, adjust it at the tie-rod.

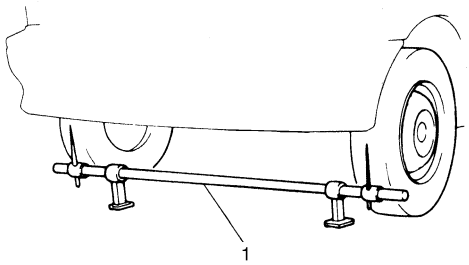

I2RH01220062-01

Toe (Total) ("b" – "a")
Front: IN 1.0 ± 1.0 mm (0.0394 ± 0.0394 in.)

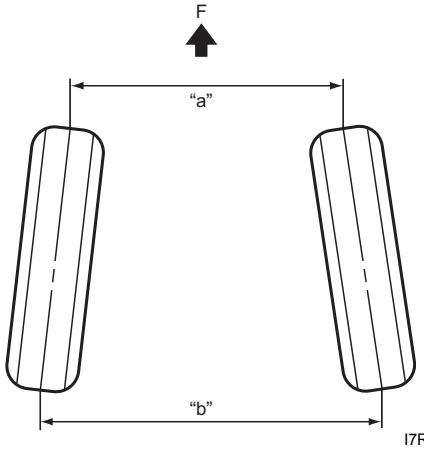

I7RW0A220002-01

F: Forward

Adjustment

⚠ CAUTION

- **Never adjust only right or left tie-rod, be sure to adjust both tie-rods by same amount.**
- **Make sure that rack boot is not twisted. Otherwise, rack boot may be broken.**

1) Check tie-rod length referring to "Tie-Rod End Initial Position Setting in Section 6C".
   If necessary, adjust tie-rod length.
2) Loosen tie-rod end lock nuts.
3) Adjust right and left tie-rods by same amount to align toe to specification.
4) After adjustment, tighten lock nuts to specified torque.

   Tightening torque
   Tie-rod end lock nut (a): 45 N·m (4.5 kgf-m, 32.5 lb-ft)

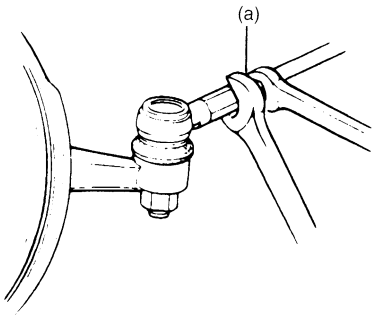

I3RM0A630030-01

Camber and Caster Check

S7RW0A2206019

Check camber and caster by camber caster kingpin gauge (1) and turning radius gauge (2). If measured value is out of specified value, check following items for damage, deformation and crack.

- Strut and component
- Suspension control arm and bush
- Suspension frame
- Wheel hub, steering knuckle or wheel bearing
- Vehicle body

Camber "a"
Front: –10' ± 1°

Caster "b"
Front: 3°40' ± 2°

NOTE

Camber and caster are not adjustable structure.

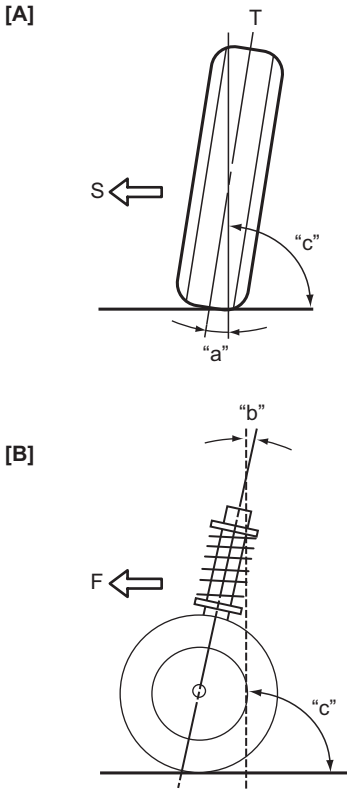

I7RW0A220003-01

[A]: Camber (Front view)	F: Forward
[B]: Caster (Side view)	S: Body center
"c": 90°	T: Center line of wheel

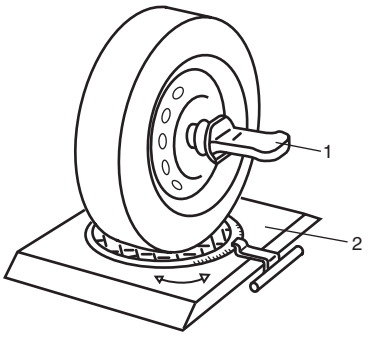

I7RW0A220004-01

Steering Angle Check and Adjustment

S7RW0A2206020

When tie-rod or tie-rod end was replaced, check toe and then also steering angle with turning radius gauge.
If measured value is out of specified value, perform inspection and adjustment of toe.

Steering angle
Inside: 36° ± 2°
Outside: 32°6' (Reference)

Reference information
Side slip
When checked with side slip tester, side slip should satisfy following specification.

Side slip (On one person)
IN 3.0 to 0 mm/m (IN 0.118 to 0 in./3.3 ft)

If side slip is greatly difference, front wheel alignment may not be correct.

Toe angle
When checked front toe angle with total wheel alignment tester or the like, refer to the following specification.

Toe angle (Each wheel)
Front: IN 1' ± 2'

If front toe angle is out of specification, measure toe with toe-in gauge and then adjust it at the tie-rod.

Front Strut Assembly Components

S7RW0A2206002

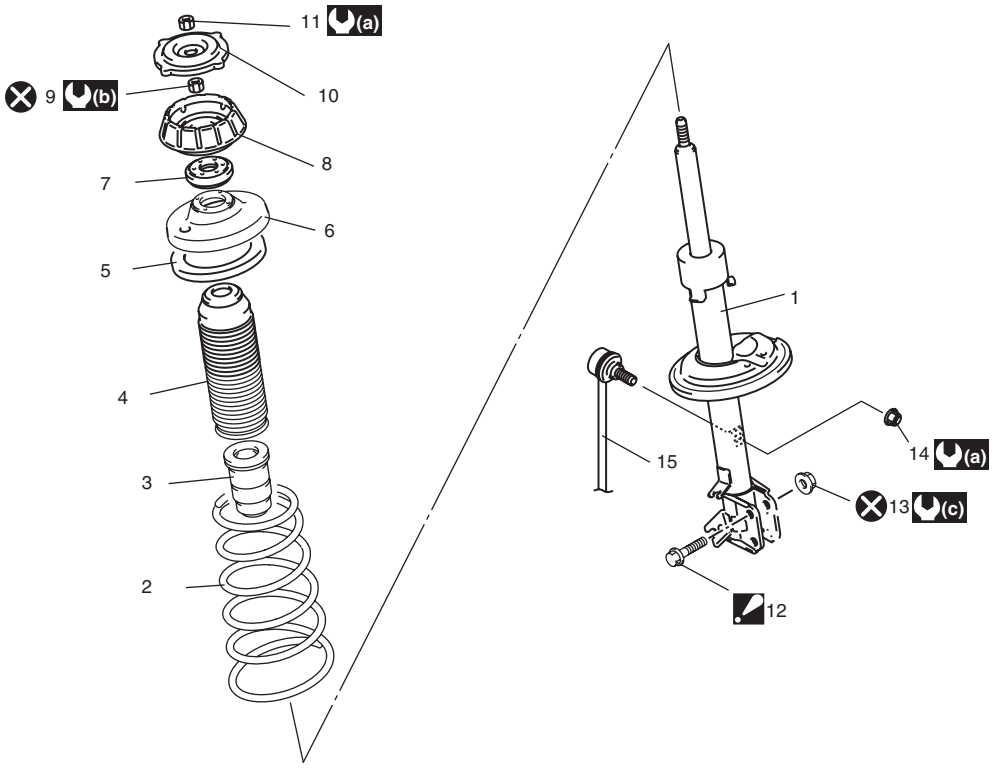

I7RW01220003-03

1. Front strut	6. Coil spring upper seat	11. Strut nut	(a) : 50 N·m (5.0 kgf-m, 36.5 lb-ft)
2. Coil spring	7. Strut bearing	12. Strut bracket bolt : Insert from vehicle front side.	(b) : 55 N·m (5.5 kgf-m, 40.0 lb-ft)
3. Bump stopper	8. Strut support	13. Strut bracket nut	(c) : 140 N·m (14.0 kgf-m, 101.5 lb-ft)
4. Strut dust cover	9. Strut support lower nut	14. Stabilizer joint nut	: Do not reuse.
5. Coil spring seat	10. Rebound stopper	15. Stabilizer joint	

Front Strut Assembly Removal and Installation

S7RW0A2206003

⚠ CAUTION

When rebound stopper and strut assembly were removed, check strut support lower nut for specified torque before installing strut assembly.

Removal

1) Remove hood rear seal (1), and then remove cowl top garnish (2) from vehicle.

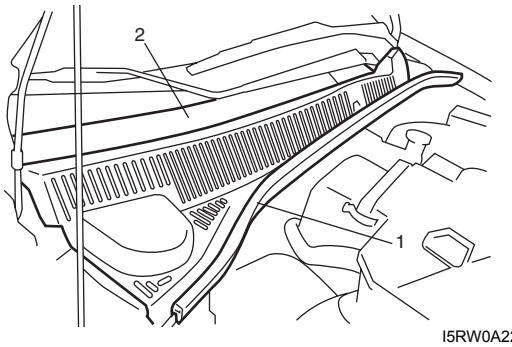

I5RW0A220003-01

NOTE

When servicing component parts of strut assembly, beforehand loosen strut nut a little before removing strut assembly. This will make service work easier. Note that the nut must not be removed at this point.

2) Hoist vehicle, allowing front suspension to hang free.
3) Remove wheel and disconnect stabilizer joint (1) from strut bracket.
   When loosening joint nut, hold stud with hexagon wrench (2).

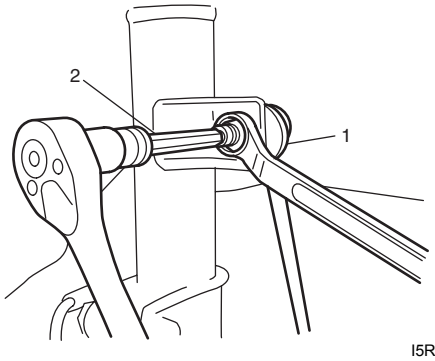

I5RW0A220004-01

4) Remove brake hose mounting bolt (1). Remove brake hose (2) from bracket and wheel speed sensor harness (3) from strut bracket as shown in figure.
5) Remove strut bracket bolts and nuts (4).

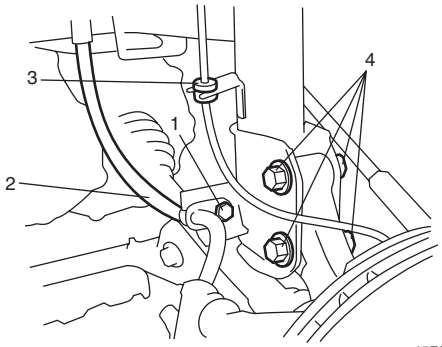

I5RW0A220005-01

6) Remove strut nut (1), and remove rebound stopper (2).

NOTE

Hold strut by hand so that it will not fall off.

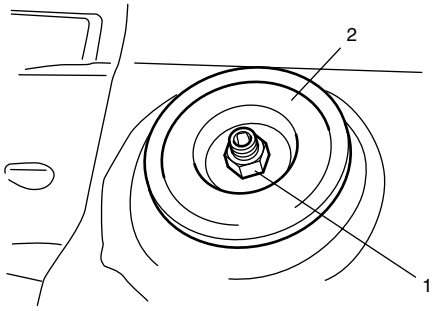

I4RS0A220006-01

7) Remove strut assembly.

Installation

⚠ CAUTION

Strut bracket nut is pre-coated with friction stabilizer. Never reuse the removed strut bracket nut. Otherwise, nut may loosen.

Install strut assembly by reversing removal procedure, noting the following instructions.

- Insert bolts in such direction as shown in figure.
- Tighten all fasteners to specified torque.

Tightening torque
Strut bracket nut (a): 140 N·m (14.0 kgf-m, 101.5 lb-ft)
Brake hose mounting bolt (c): 26 N·m (2.6 kgf-m, 19.0 lb-ft)
Stabilizer joint nut (d): 50 N·m (5.0 kgf-m, 36.5 lb-ft)

- Lower hoist and vehicle in unloaded condition, tighten strut nut (b) to specified torque.

  Tightening torque
  Strut nut (b): 50 N·m (5.0 kgf-m, 36.5 lb-ft)

  NOTE

  Don't twist brake hose and wheel speed sensor harness when installing them.

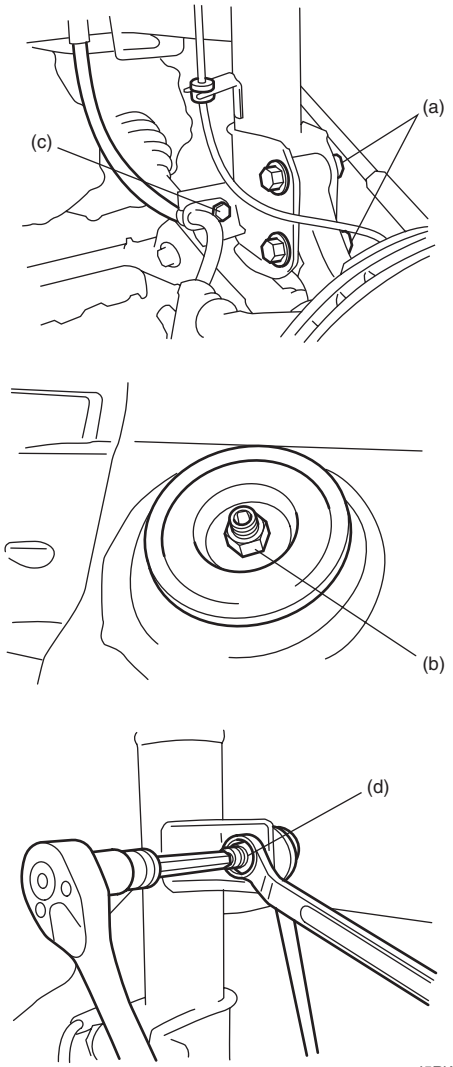

I5RW0A220006-01

- Tighten wheel nut to specified torque.

  Tightening torque
  Wheel nut: 85 N·m (8.5 kgf-m, 61.5 lb-ft)

- After installation, confirm front wheel alignment.

Front Strut Assembly Disassembly and Reassembly

S7RW0A2206004

Disassembly

1) Attach special tool (A) to coil spring as shown. Turn special tool bolts alternately until coil spring tension is released. Rotate the strut around its axis to confirm that the coil spring is released or not.

   Special tool
   (A): 09943–25010

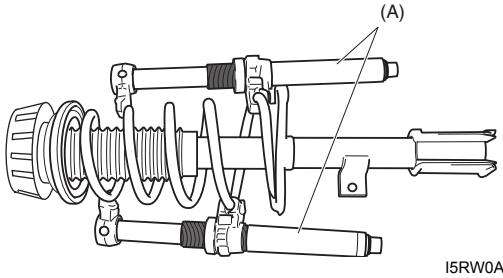

I5RW0A220007-01

2) While keeping coil spring compressed with special tools, remove strut support lower nut with hexagon wrench as shown figure.

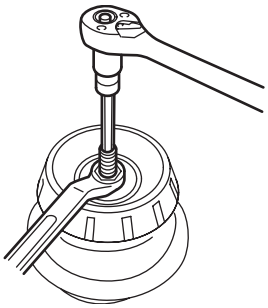

I5RW0A220008-01

3) Disassemble front strut assembly.

Reassembly

1) Compress coil spring using special tool (spring compressor) until total length becomes about 280 mm (11.0 in.) as shown.

   <u>Length</u>
   "a": 280 mm (11.0 in.)

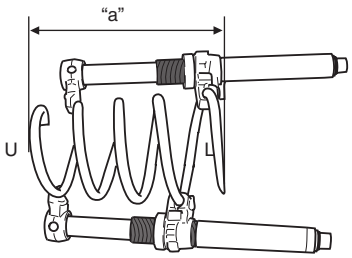

I5RW0A220009-01

U:	Upper side (small dia.)
L:	Lower side (large dia.)

2) Install compressed coil spring to strut, and place coil spring end (2) onto spring lower seat (1) as shown.

NOTE

End of coil spring must not interfere with step of spring lower seat.

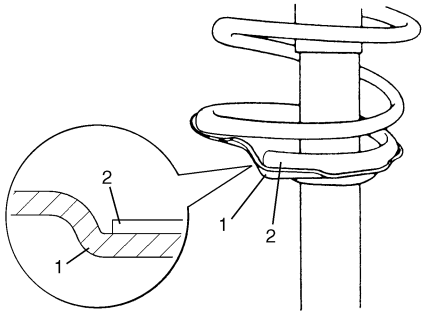

I4RS0A220011-01

3) Install bump stopper and strut dust cover onto strut rod. For installing direction, refer to the figure in “Front Strut Assembly Components”.
4) Pull strut rod as far up as possible and use care not to allow it to retract into strut.
5) Install spring seat on coil spring and then spring upper seat (1) aligning “OUT” mark (3) on spring upper seat and center of strut bracket (2).

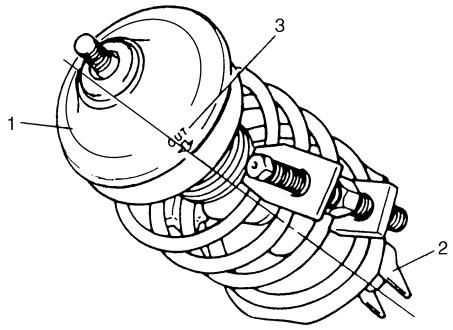

I4RS0A220012-01

6) Install bearing (3), strut support (2) and strut support lower nut (1) in this sequence.
Tighten strut support lower nut (1) to specified torque.
When tightening strut support lower nut, hold stud with hexagon wrench.

Tightening torque
Strut support lower nut (a): 55 N·m (5.5 kgf-m, 40.0 lb-ft)

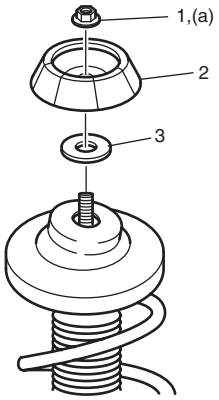

I5RW0A220010-02

Front Strut Assembly Check

S7RW0A2206005

- Inspect strut for oil leakage, damage or deformation. If defect is found, replace strut as an assembly unit, because it can not be disassembled.

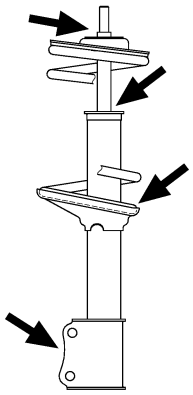

I4RS0A220014-01

- Inspect strut function referring to the following procedures:
  1) Check and adjust tire pressures as specified.
  2) Bounce vehicle body up and down 3 or 4 times continuously by pushing front end of the vehicle side body to check strut.
     Also, note how many times vehicle body rebounds to stop after force application.
  3) Repeat the same procedure to the other strut to confirm that the both side struts equally respond.

If conditions of struts are in doubt, compare them with known-good vehicle or strut.

- Inspect bearing for wear, abnormal noise or gripping. If defective, replace.
- Inspect coil spring seat for cracks or deformation. If defective, replace.
- Inspect bump stopper for deterioration. If defective, replace.
- Inspect rebound stopper and strut mount for wear, cracks or deformation. If defective, replace.

Front Wheel Hub and Steering Knuckle Components

S7RW0A2206006

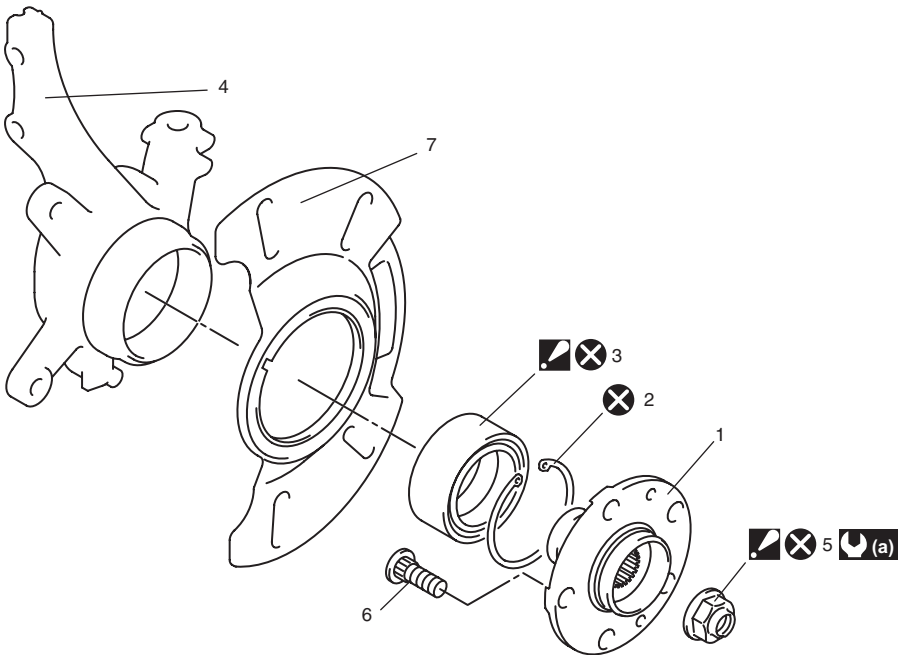

I7RW0A220005-01

1. Front wheel hub	4. Steering knuckle	7. Dust cover
2. Circlip	5. Drive shaft nut : Calk, after tightening.	(a) : 200 N·m (20.0 kgf-m, 145.0 lb-ft)
3. Wheel bearing : Face grooved rubber seal side to wheel hub.	6. Hub bolt	⊗ : Do not reuse.

Front Wheel Hub, Steering Knuckle and Wheel Bearing Removal and Installation

S7RW0A2206007

⚠ CAUTION

When removing and installing steering knuckle assembly, be careful not to damage dust boots of control arm joint by drive shaft dust cover and brake dust cover.

Removal

1) Hoist vehicle and remove wheel.
2) Uncaulk drive shaft nut (1).
3) Depress foot brake pedal and hold it. Remove drive shaft nut (1).

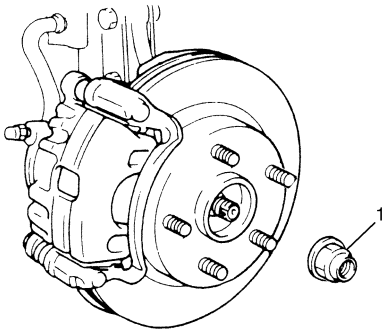

I5JB0A220013-01

4) Remove caliper carrier bolts and then caliper (1) with carrier.

NOTE

Hang removed caliper with a wire hook or the like (3) so as to prevent brake hose (4) from bending, twisting or tension.
Do not depress brake pedal during caliper removal.
Don't operate brake pedal with caliper removed.

5) Pull brake disc (2) off by using two 8 mm bolts.

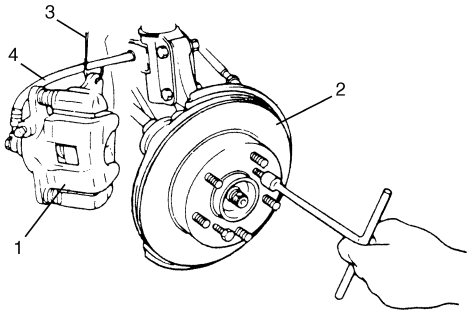

I5JB0A220014-01

6) Pull out wheel hub (1) with special tools.

Special tool
(A): 09943–17912
(B): 09942–15511

⚠ CAUTION

When wheel hub is removed, replace wheel bearing with new one.

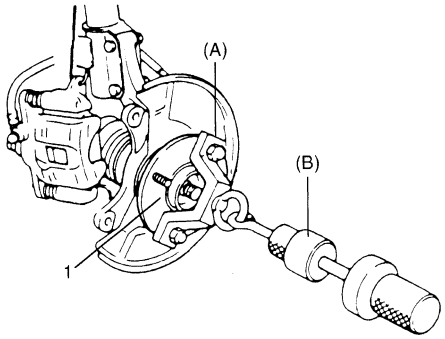

I2RH01220028-01

7) Disconnect tie-rod end from steering knuckle referring to “Tie-Rod End Removal and Installation in Section 6C”.
8) Remove wheel speed sensor (1) from knuckle.

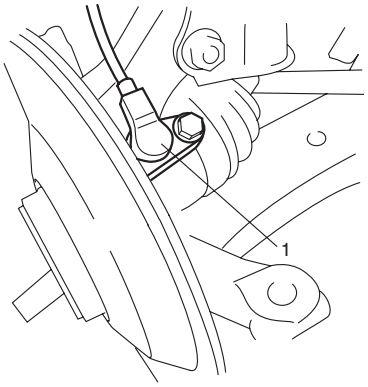

I5RW0A220013-01

9) Loosen strut bracket nuts (1).
10) Remove ball joint bolt (4) and washer (3).
11) Remove strut bracket bolts (5) from strut bracket and then steering knuckle (2).

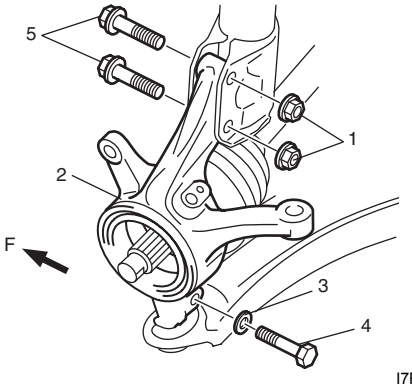

I7RW0A220006-01

F: Forward

12) Uncaulk and remove dust cover (1).

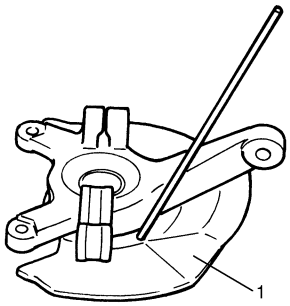

I2RH01220032-01

13) Remove circlip from knuckle.
14) Using hydraulic press (1) and special tool, remove wheel bearing.

Special tool
(A): 09913–75510
(B): 09943–37910

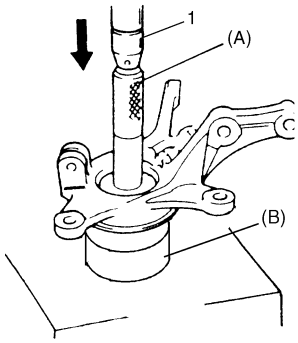

I5RW0A220014-01

15) Remove wheel bearing outside inner race (1).

Special tool
(A): 09913–65810
(B): 09913–85230

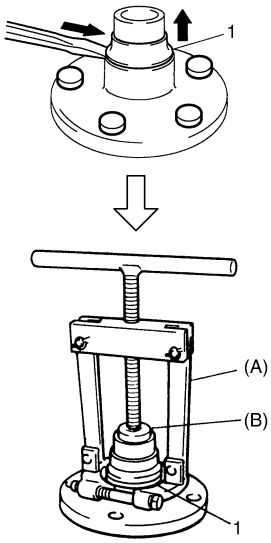

I7RW01220005-01

16) Remove hub bolts (1) with copper hammer or hydraulic press.

⚠ CAUTION

Never remove bolt unless replacement is necessary.
Be sure to use a new bolt for replacement.

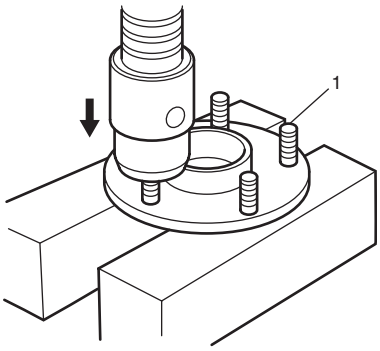

I7RW01220006-01

Installation

⚠ CAUTION

- **Never reuse wheel bearing and circlip. Otherwise, abnormal noise and abnormal vibration or any other abnormal condition may occur.**
- **Strut bracket nut is pre-coated with friction stabilizer. Never reuse the removed strut bracket nut.**
  Otherwise, nut may loosen.

For installation, reverse removal procedure, noting the following instructions.

1) Face grooved rubber seal side (1) of new wheel bearing (2) upward as shown in figure and press-fit it into knuckle (3) using special tool.

Special tool
(A): 09913–75510
(B): 09944–78220
(C): 09925–14520

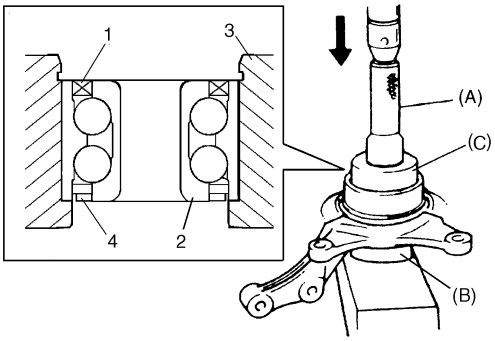

I5RW0A220016-01

4. Encoder

2) Install new circlip (1).

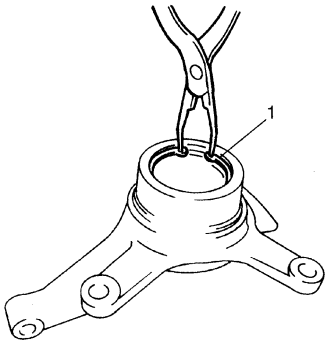

I2RH01220037-01

3) Insert new hub bolt (1) in hub hole. Rotate hub bolt slowly to assure that serrations are aligned with those made by original bolt.

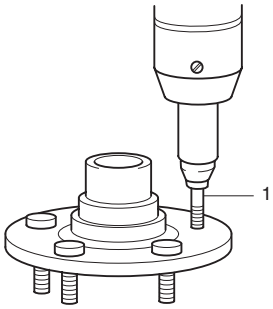

I7RW01220015-01

4) Drive in dust cover so that dimensions “a” and “b” become equal as shown in the figure.

⚠ CAUTION

When drive in dust cover, be careful not to deform it.

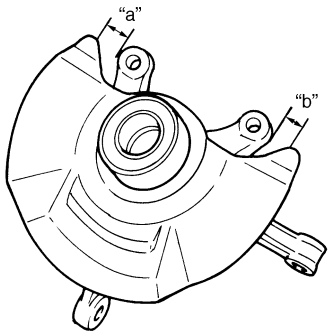

I2RH01220038-01

5) Caulk more than 6 places with a punch.

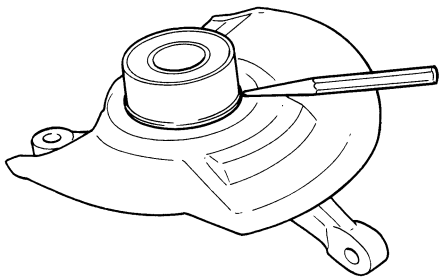

I2RH01220039-01

6) Using special tool and hydraulic press, press fit wheel hub (1) into wheel bearing (2) (Face grooved rubber seal side to wheel hub).

Special tool
(A): 09913–75510

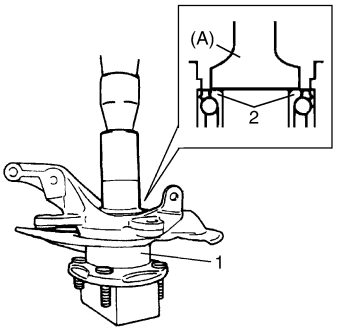

I7RW01220007-01

7) Apply grease lightly to end face of inner ring (1).

"A": Grease 99000–25121 (SUSZUKI Super Grease H)

NOTE

Do not apply the grease to the encoder section to avoid the encoder malfunction.

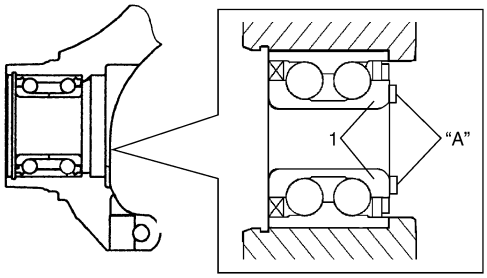

I5RW0B220001-01

8) Install steering knuckle with wheel hub and bearing (1) so that foreign material should not enter wheel speed sensing point "a".

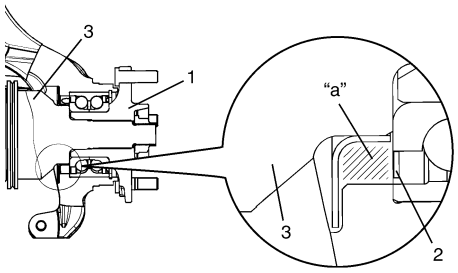

I7RW01220008-02

2.	Wheel encoder
3.	Drive shaft

9) Install ball joint bolt (1), washer (2), strut bracket bolts (4) and new nuts (3) from the direction shown in figure.

10) Tighten suspension arm ball joint bolt (2) to specified torque.

Tightening torque
Suspension arm ball joint bolt (a): 60 N·m (6.0 kgf-m, 43.5 lb-ft)

11) Tighten new strut bracket nuts (3) to specified torque.

Tightening torque
Strut bracket nut (b): 140 N·m (14.0 kgf-m, 101.5 lb-ft)

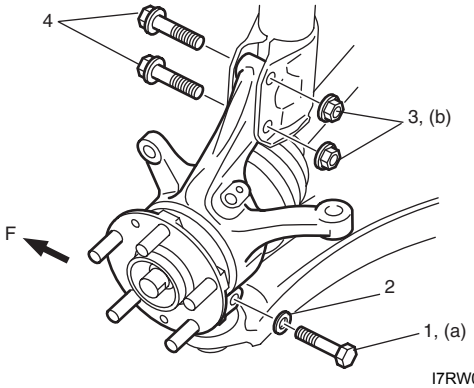

I7RW01220009-01

F:	Vehicle front

12) Install wheel speed sensor (1).

Tightening torque
Wheel speed sensor mounting bolt (a): 11 N·m (1.1 kgf-m, 8.0 lb-ft)

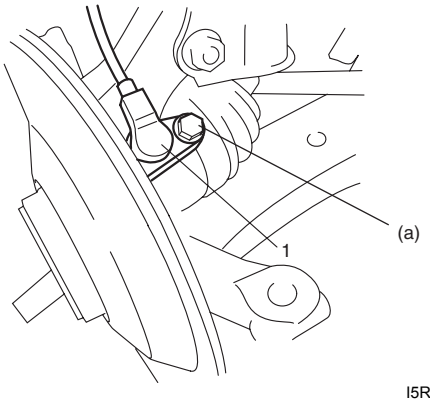

I5RW0A220017-01

13) Connect tie-rod end to steering knuckle, referring to “Tie-Rod End Removal and Installation in Section 6C”.
14) Install brake disc (2) and brake caliper (3).
15) Tighten caliper carrier bolt to specified torque.

Tightening torque
Caliper carrier bolt: 85 N·m (8.5 kgf-m, 61.5 lb-ft)

16) Depress foot brake pedal and hold it there.
Tighten new drive shaft nut (1) to specified torque.

Tightening torque
Drive shaft nut (a): 200 N·m (20.0 kgf-m, 145.0 lb-ft)

⚠ CAUTION

Never reuse drive shaft nut (1).

17) Caulk drive shaft nut (1) as shown.

⚠ CAUTION

Be careful not to damage the drive shaft nut while caulking it. If it is damaged, replace it with new one.

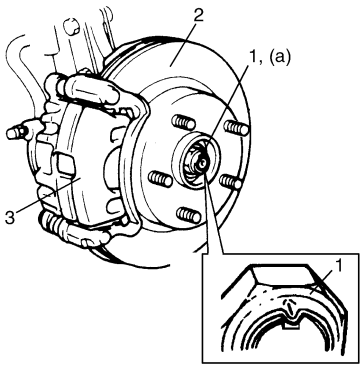

I7RW0A220007-01

18) Tighten wheel nuts to specified torque.

Tightening torque
Wheel nut: 85 N·m (8.5 kgf-m, 61.5 lb-ft)

19) Confirm front wheel alignment referring to “Front Wheel Alignment Inspection and Adjustment”.

Front Wheel Bearing and Wheel Hub Inspection

S7RW0A2206021

- Check wheel bearing noise and smooth wheel rotation by rotating wheel. If defective, replace bearing.

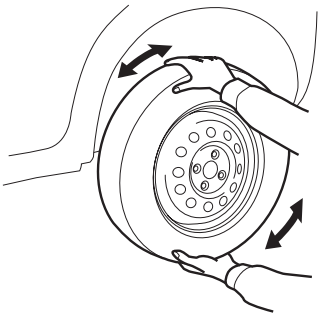
I7RW01440006-01

- Check wear of wheel bearing. When measuring thrust play, apply a dial gauge to wheel hub as shown in figure.

<u>Front wheel bearing thrust play</u>
Limit: 0.1 mm (0.004 in.)

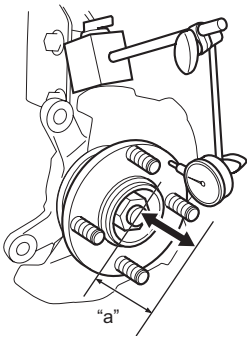

I8RW01220008-02

Suspension Control Arm Removal and Installation

S7RW0A2206009

⚠ CAUTION

When removing and installing steering knuckle assembly, be careful not to damage dust boots of control arm joint by drive shaft dust cover and brake dust cover.

Removal

1) Hoist vehicle and remove wheel.
2) Remove steering knuckle with front wheel hub referring to “Front Wheel Hub, Steering Knuckle and Wheel Bearing Removal and Installation”.
3) Remove suspension control arm bolts (1).
4) Remove suspension control arm (2).

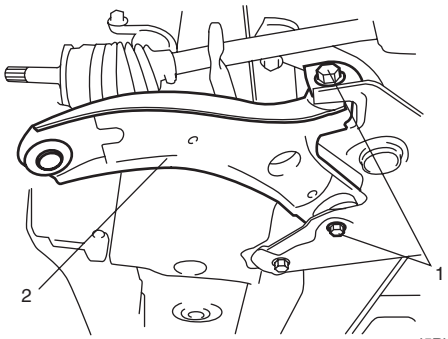

I5RW0A220019-01

Installation

⚠ CAUTION

Suspension control arm bolt is pre-coated with friction stabilizer. Never reuse the removed bolt.
Otherwise, bolt may loosen.

1) Install suspension control arm as shown but tighten suspension control arm bolts (1) only temporarily.

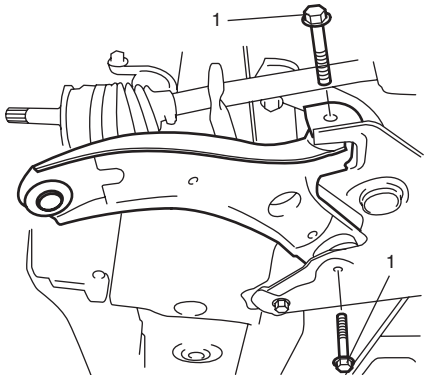

I5RW0A220020-01

2) Install steering knuckle with front wheel hub referring to “Front Wheel Hub, Steering Knuckle and Wheel Bearing Removal and Installation”.
3) Install wheel and tighten wheel nuts to specified torque.

   Tightening torque
   Wheel nut: 85 N·m (8.5 kgf-m, 61.5 lb-ft)

4) Lower hoist with vehicle in unloaded condition, tighten control arm bolts to specified torque.

   Tightening torque
   Suspension control arm bolt (a): 95 N·m (9.5 kgf-m, 69.0 lb-ft)

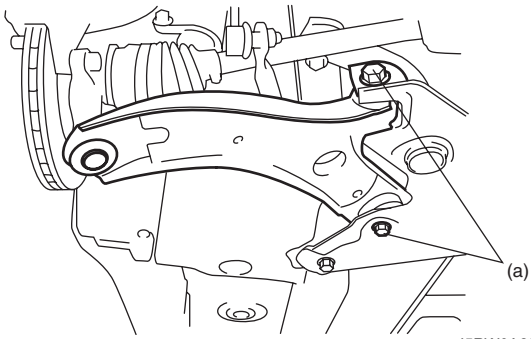

I5RW0A220021-01

5) Confirm front wheel alignment referring to “Front Wheel Alignment Inspection and Adjustment”.

Suspension Control Arm Bush Disassembly and Assembly

S7RW0A2206010

Disassembly

1) Cut off bush flange (rubber) (1) with knife.

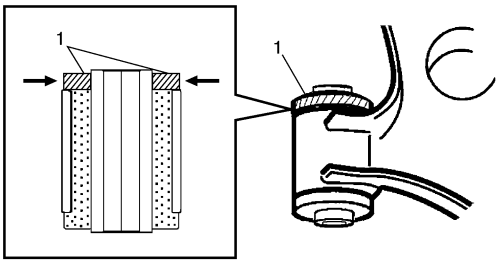

I4RS0B220019-01

2) Push out bush by using hydraulic press (2) and special tools.

   Special tool
   (A): 09943–76310
   (B): 09913–75821

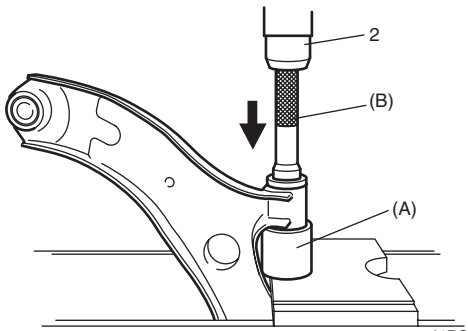

I4RS0B220020-01

Assembly

⚠ CAUTION

Be sure to use new bush.

1) Front bush
   Press-fit front bush (1) by using special tools and press (2).

   Special tool
   (A): 09943–76310
   (B): 09913–75821

   NOTE

   - **Before installing bush, apply soap water on its circumference to facilitate bush installation.**

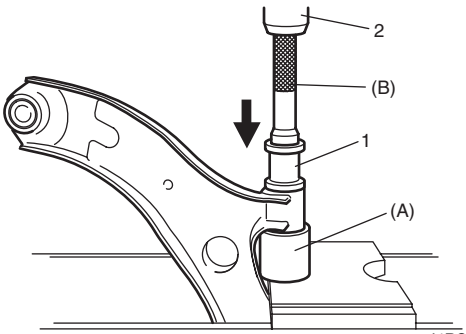

I4RS0B220021-01

2) Press-fit bush (1) so that dimensions “A” and “B” in figure become equal.

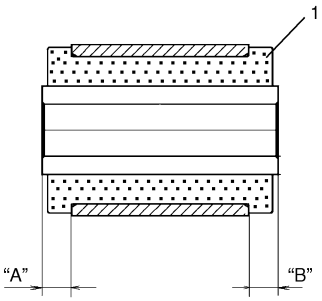

I4RS0A220033-01

Suspension Control Arm / Steering Knuckle Check

S7RW0A2206011

Inspect for cracks, deformation or damage.
If defective, replace.

Suspension Control Arm Bush Inspection

S7RW0A2206012

Inspect for damage, wear or deterioration.
If defective, replace.

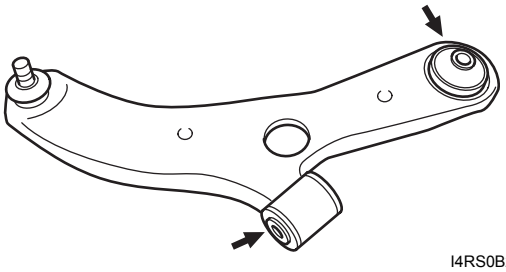
I4RS0B220022-01

Suspension Control Arm Joint Check

S7RW0A2206013

- Check smooth rotation of ball stud.
- Check damages of ball stud.
- Check damages of dust cover.

NOTE

Suspension control arm and arm joint cannot be separated.

If there is any damage to either parts, control arm must be replaced as a complete unit.

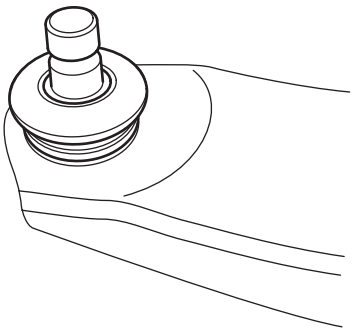
I4RS0B220023-01

Front Suspension Frame, Stabilizer Bar and/or Bush Components

S7RW0A2206014

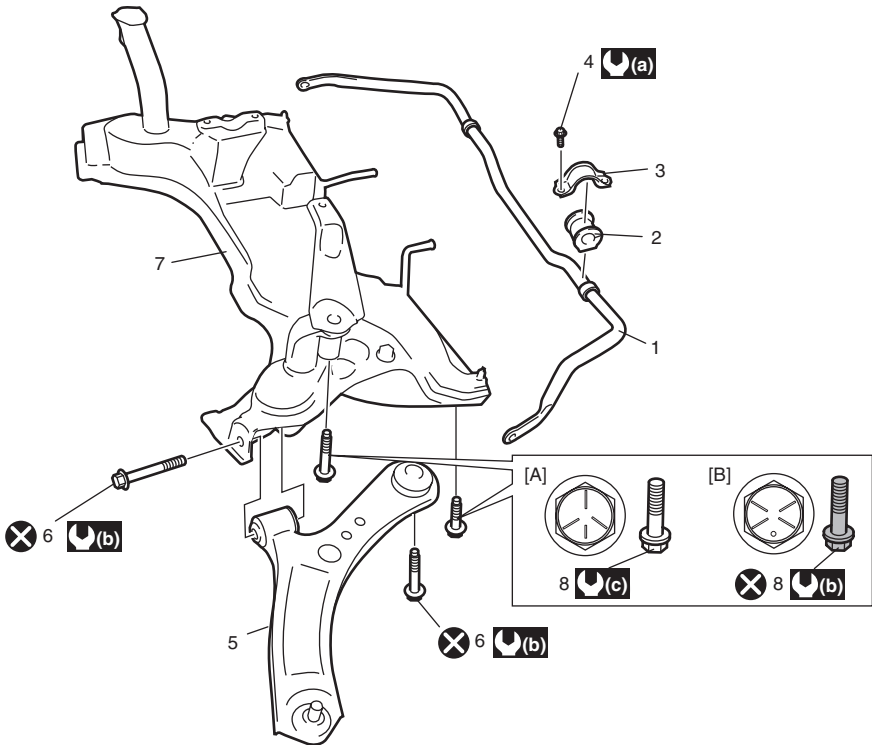

I8RW01220009-03

[A]: Non-pre-coated bolt	4. Stabilizer bar mounting bracket bolt	(a) : 23 N·m (2.3 kgf-m, 17.0 lb-ft)
[B]: Pre-coated bolt with friction stabilizer	5. Suspension control arm	(b) : 95 N·m (9.5 kgf-m, 69.0 lb-ft)
1. Stabilizer bar	6. Suspension control arm mounting bolt	(c) : 150 N·m (15.0 kgf-m, 108.5 lb-ft)
2. Stabilizer bush	7. Front suspension frame	⊗ : Do not reuse.
3. Stabilizer mounting bracket	8. Front suspension frame mounting bolt	

Front Suspension Frame, Stabilizer Bar and/or Bush Removal and Installation

S7RW0A2206015

⚠ WARNING

When supporting and installing front suspension frame, be sure to apply some supporting equipment (such as mission jack) at well-balanced position in the center section of front suspension frame so as to prevent from its drop. Otherwise drop and injure.

⚠ CAUTION

When removing and installing suspension control arm, be careful not to damage dust boots of suspension control arm joint by drive shaft dust cover and brake dust cover.

Removal

1) Disconnect negative (–) cable at battery.
2) Remove air cleaner assembly referring to “Air Cleaner Assembly Removal and Installation in Section 1D”.
3) Remove hood referring to “Hood Removal and Installation in Section 9J”.
4) Hoist vehicle and remove front wheels.
5) Remove exhaust No.1, No.2 and center pipes referring to “Exhaust System Components in Section 1K”.
6) Remove steering gear case mounting bolt referring to “Steering Gear Case Assembly Components in Section 6C”.
7) Fix steering gear case to body with rope to avoid the steering gear case fall off when front suspension frame is lowered.
8) Remove suspension control arms and disconnect stabilizer joints.
9) Support engine assembly by using chain hoist (1).

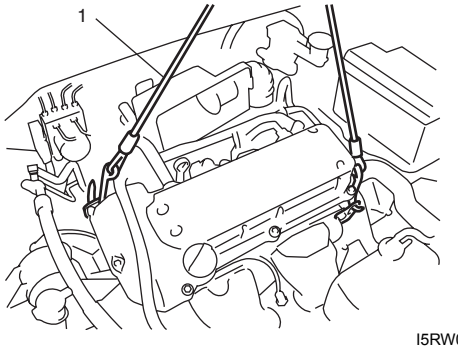

I5RW0A220026-01

10) Remove engine rear mounting nut and mounting member nut referring to “Engine Mountings Components in Section 1D”.
11) Support front suspension frame (2) with mission jack (1).

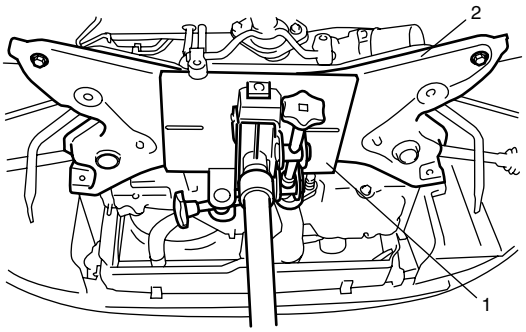

I4RS0A220042-01

12) Remove engine rear mounting, mounting member bolt and front suspension frame mounting bolts (1).

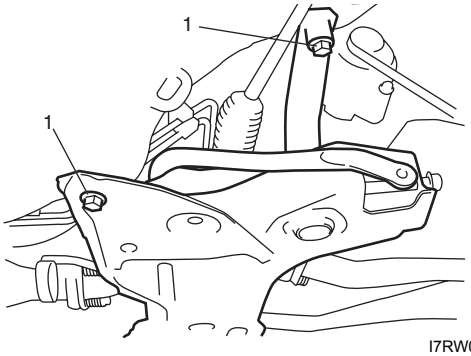

I7RW01220012-01

13) Lower front suspension frame.
14) Remove stabilizer bar (1) with stabilizer bush from suspension frame (2).

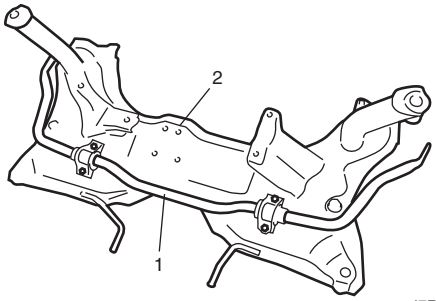

I7RW01220016-01

Installation

⚠ CAUTION

There are two types of front suspension mounting bolt. One is pre-coated with friction stabilizer. The other is not. Never reuse pre-coated bolt to prevent it from loosening. Be sure to replace pre-coated bolt with a new one whenever loosening once.

1) Install stabilizer bar (1), stabilizer bush (2) and stabilizer mounting bracket (3) to front suspension frame as shown in figure while ensuring that stabilizer is centered, side-to-side.

NOTE

- **For proper installing direction of stabilizer mounting bracket (3), place oblong to rear and circular hole to front.**
- **For correct installation of stabilizer bar, side-to-side, be sure that stopper ring (4) on stabilizer bar aligns with stabilizer bush, both right and left, as shown in figure.**

2) Tighten stabilizer bar mounting bracket bolts to specified torque.

NOTE

Tighten stabilizer bar mounting bracket rear bolt (5) after front bolt (6).

Tightening torque
Stabilizer bar mounting bracket bolt (a): Tighten 23 N·m (2.3 kgf-m, 17.0 lb-ft) to specified procedure

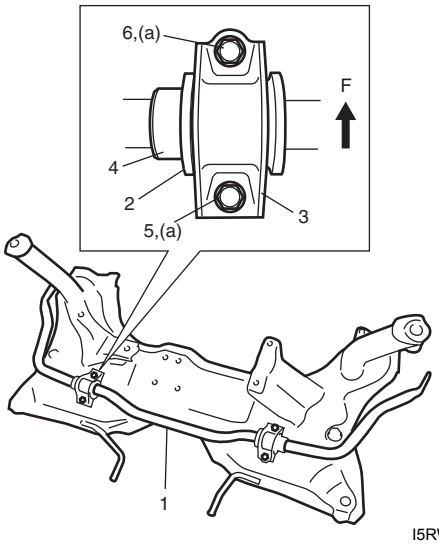

I5RW0A220029-02

F. Forward

3) Support front suspension frame (2) with mission jack (1) and jack up it.

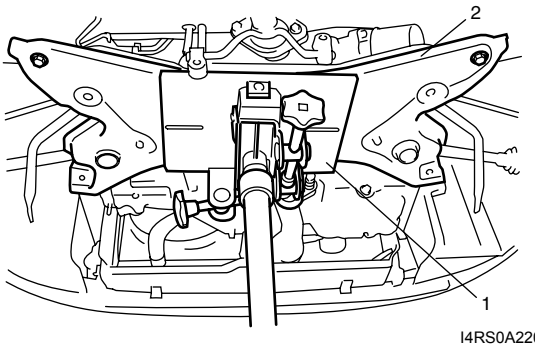

I4RS0A220042-01

4) Align lugs (1) (right and left) of front suspension frame with whole (2) in vehicle body.

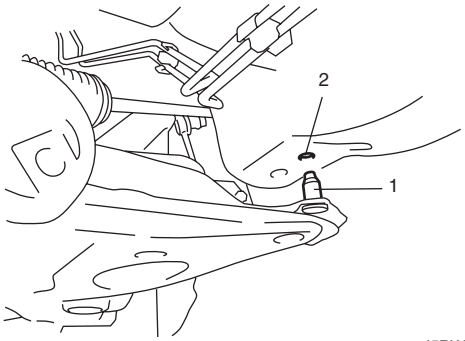

I5RW0A220030-01

5) Tighten front suspension frame bolts to specified torque.

Tightening torque
Front suspension frame mounting bolt (Non-pre-coated bolt): 150 N·m (15.0 kgf-m, 108.5 lb-ft)
Front suspension frame mounting bolt (Pre-coated bolt with friction stabilizer): 95 N·m (9.5 kgf-m, 69.0 lb-ft)

6) Remove mission jack from front suspension frame.
7) Install engine rear mounting and tighten mounting member bolts referring to “Engine Mountings Components in Section 1D”.
8) Remove chain hoist from engine assembly.
9) Tighten steering gear case mounting bolts referring to “Steering Gear Case Assembly Components in Section 6C”.
10) Install suspension control arms referring to “Suspension Control Arm Removal and Installation”.
11) Install stabilizer joint (1) and tighten nut to specified torque.
When tightening nut, hold stud with hexagon wrench (2).

Tightening torque
Stabilizer joint nut (a): 50 N·m (5.0 kgf-m, 36.5 lb-ft)

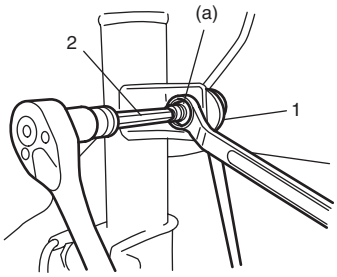

I5RW0A220033-01

12) Install exhaust No.1, No.2 and center pipe referring to “Exhaust System Components in Section 1K”.
13) Install wheel and tighten nut to specified torque.

Tightening torque
Wheel nut: 85 N·m (8.5 kgf-m, 61.5 lb-ft)

14) Install air cleaner assembly referring to “Air Cleaner Assembly Removal and Installation in Section 1D”.
15) Install hood referring to “Hood Removal and Installation in Section 9J”.
16) Lower hoist and vehicle in unloaded condition, tighten suspension control arm bolts to specified torque.

Tightening torque
Suspension control arm bolt: 95 N·m (9.5 kgf-m, 69.0 lb-ft)

17) Connect negative (–) cable at battery.
18) Confirm front wheel alignment referring to “Front Wheel Alignment Inspection and Adjustment”.

Front Suspension Frame Check

S7RW0A2206016

Inspect for cracks, deformation or damage.
If defective, replace.

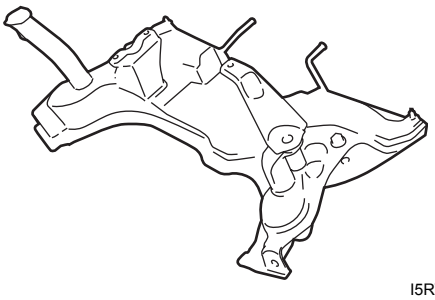

I5RW0A220034-01

Front Stabilizer Bar, Bush and/or Joint Check

S7RW0A2206017

Stabilizer Bar

Inspect for damage or deformation.
If defective, replace.

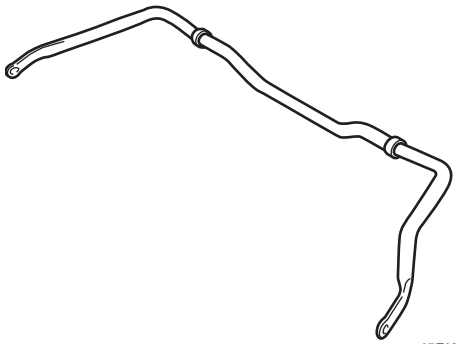

I5RW0A220035-01

Stabilizer Bush

Inspect for damage, wear or deterioration.
If defective, replace.

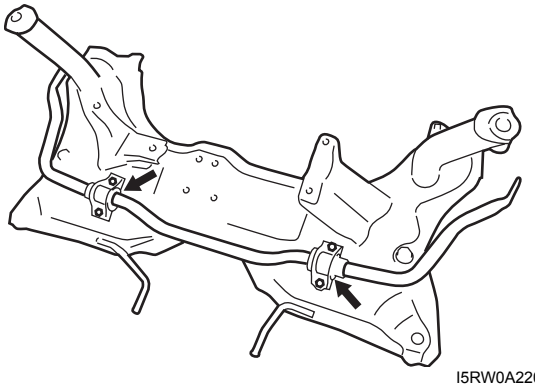

I5RW0A220036-01

Stabilizer Joint

1) Check for smooth rotation.
2) Check damages of ball stud.
3) Check damages of dust cover.

NOTE

Stabilizer joint (1) cannot be disassembled.

If there is any damage to either parts, stabilizer joint must be replaced as a complete unit.

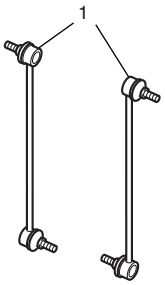

I4RH01220007-01

Front Suspension Fasteners Check

S7RW0A2206018

Check each bolt and nut fastening suspension parts for tightness. Tighten loose one, if any, to specified torque, referring to “Front Suspension Construction”.

Specifications

Tightening Torque Specifications

S7RW0A2207001

Fastening part	Tightening torque			Note
	N·m	kgf-m	lb-ft	
Tie-rod end lock nut	45	4.5	32.5	☞
Strut bracket nut	140	14.0	101.5	☞ / ☞
Brake hose mounting bolt	26	2.6	19.0	☞
Stabilizer joint nut	50	5.0	36.5	☞ / ☞
Strut nut	50	5.0	36.5	☞
Wheel nut	85	8.5	61.5	☞ / ☞ / ☞ / ☞
Strut support lower nut	55	5.5	40.0	☞
Suspension arm ball joint bolt	60	6.0	43.5	☞
Wheel speed sensor mounting bolt	11	1.1	8.0	☞
Caliper carrier bolt	85	8.5	61.5	☞
Drive shaft nut	200	20.0	145.0	☞
Suspension control arm bolt	95	9.5	69.0	☞ / ☞
Stabilizer bar mounting bracket bolt	Tighten 23 N·m (2.3 kgf-m, 17.0 lb-ft) to specified procedure			☞
Front suspension frame mounting bolt (Non-pre-coated bolt)	150	15.0	108.5	☞
Front suspension frame mounting bolt (Pre-coated bolt with friction stabilizer)	95	9.5	69.0	☞

NOTE

The specified tightening torque is also described in the following.
“Front Suspension Construction”
“Front Strut Assembly Components”
“Front Wheel Hub and Steering Knuckle Components”
“Front Suspension Frame, Stabilizer Bar and/or Bush Components”

Reference:
For the tightening torque of fastener not specified in this section, refer to “Fasteners Information in Section 0A”.

Special Tools and Equipment

Recommended Service Material

S7RW0A2208001

Material	SUZUKI recommended product or Specification		Note
Grease	SUZUKI Super Grease H	P/No.: 99000–25121	☞

Special Tool

S7RW0A2208002

09913–65810 Crankshaft bearing puller ☞ 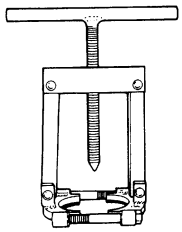	09913–75510 Bearing installer ☞ / ☞ / ☞ 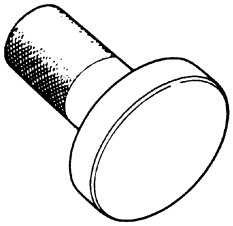
09913–75821 Bearing installer attachment ☞ / ☞ 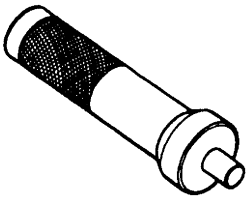	09913–85230 Bearing remover tool ☞ 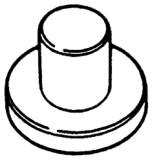
09925–14520 Bearing and oil seal installer (80 x 50 mm) ☞	09942–15511 Sliding hammer ☞ 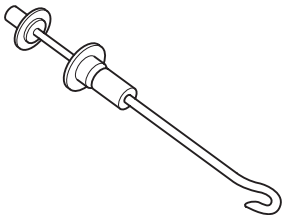
09943–17912 Wheel hub remover ☞ 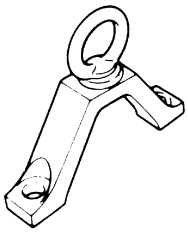	09943–25010 Spring compressor ☞ 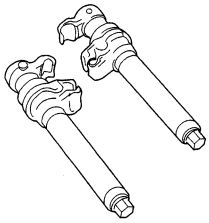
09943–37910 Bearing installer & remover ☞ 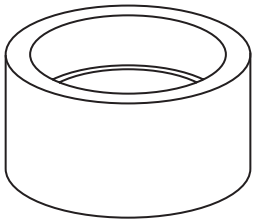	09943–76310 Bush remover ☞ / ☞ 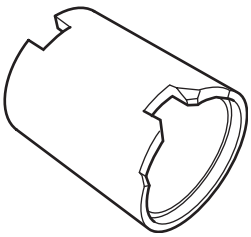
09944–78220 Bearing installer support ☞ 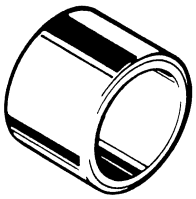	

Rear Suspension

Repair Instructions

Rear Suspension Components

S7RW0A2306001

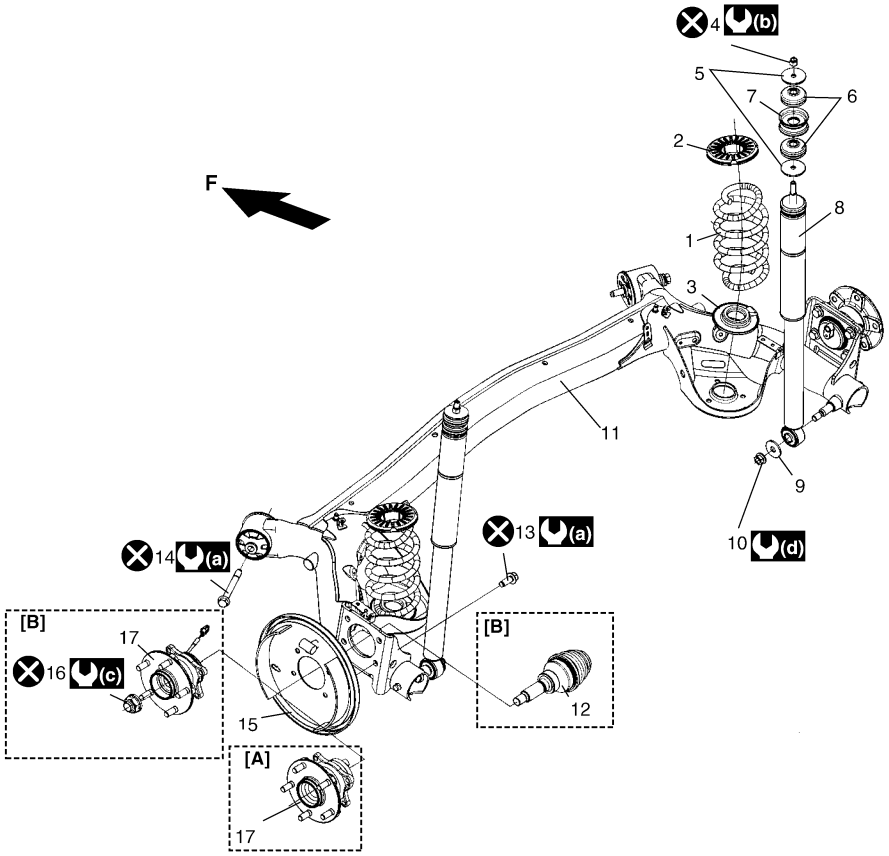

I7RW0A230001-01

F: Forward	7. Vehicle body	16. Rear drive shaft nut
[A]: 2WD model	8. Rear shock absorber	17. Rear wheel hub assembly
[B]: 4WD model	9. Lower washer	(a) : 73 N·m (7.3 kgf-m, 53.0 lb-ft)
1. Coil spring	10. Lower nut	(b) : 30 N·m (3.0 kgf-m, 22.0 lb-ft)
2. Spring upper seat	11. Rear axle	(c) : 175 N·m (17.5 kgf-m, 127.0 lb-ft)
3. Spring lower seat	12. Rear drive shaft	(d) : 90 N·m (9.0 kgf-m, 65.0 lb-ft)
4. Upper nut	13. Rear hub bolt	: Do not reuse.
5. Upper washer	14. Rear axle bolt	
6. Upper bush	15. Brake back plate	

Rear Wheel Alignment Inspection

S7RW0A2306012

Measure toe and camber referring to “Inspection” under “Front Wheel Alignment Inspection and Adjustment in Section 2B”.

NOTE

Rear suspension is not adjustable structure.

Toe (total)
Rear: IN 5.0 ± 5.0 mm (IN 0.1969 ± 0.1969 in.)

Camber
Rear: –1° ± 1°

If measured value is out of specified value, check following items for damage, deformation and crack.

- Rear axle (torsion beam)
- Wheel hub or wheel bearing
- Vehicle body

Reference information
Toe angle
When checked rear toe angle with total wheel alignment tester or the like, refer to the following specification.

Toe angle (Each wheel)
Rear: IN 17’ ± 17’

Rear Shock Absorber Removal and Installation

S7RW0A2306002

Removal

1) Hoist vehicle and remove rear wheel.
2) For hatchback model, remove access hole cover (1) in quarter inner trim (2).

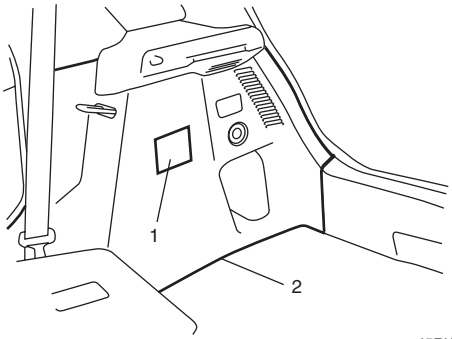

I5RW0A230002-02

3) For sedan model, remove quarter inner trim (1).

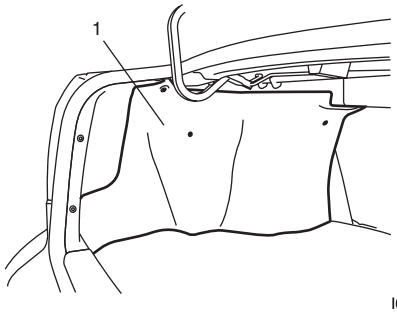

I6RW0B230002-02

4) Support rear axle by using floor jack to prevent it from lowering.
5) Remove absorber lower nut (1) and lower washer.
6) Remove absorber upper nut (2). Then remove shock absorber (3), upper washers.

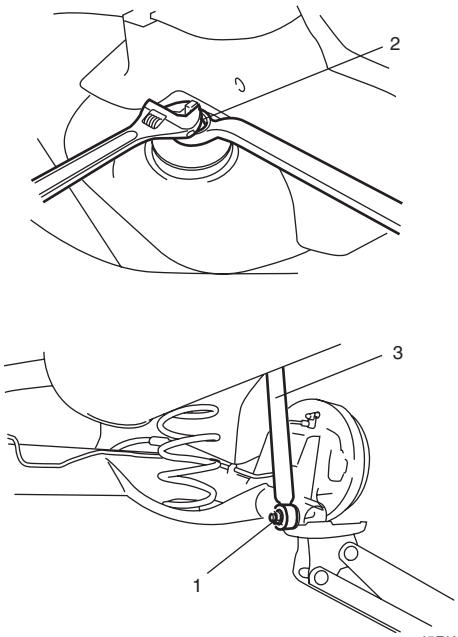

I5RW0A230003-01

7) Remove absorber upper bushes (1).

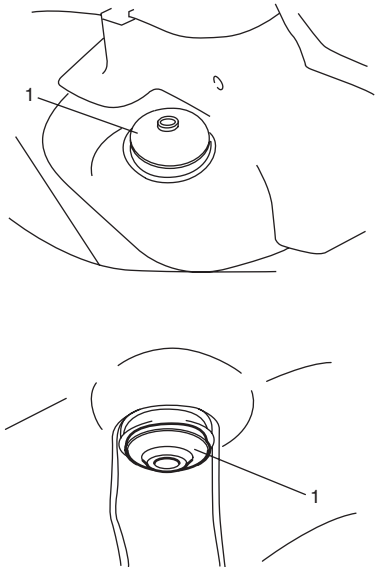

I5RW0A230004-01

Installation

1) Install absorber upper bushes (1).

NOTE

For proper installing direction of absorber upper bushes (1), refer to the figure.

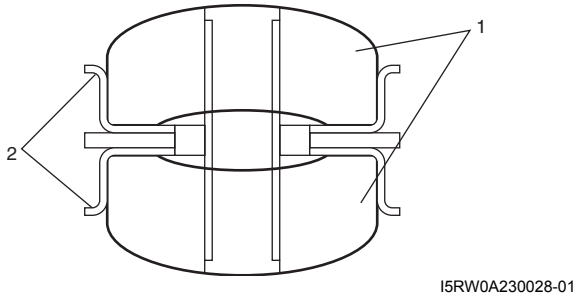

2. Body panel

2) Install shock absorber (1), upper washers (2). Tighten new rear shock absorber upper nut (4) and lower nut (5) temporarily at this step.

⚠ CAUTION

Use new rear shock absorber upper nut. Otherwise, nut may loosen.

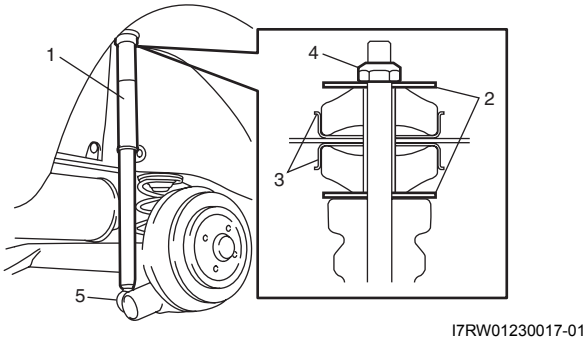

3. Body panel

3) Remove floor jack from rear axle.
4) Install rear wheel and tighten wheel nuts to specified torque.

Tightening torque
Wheel nut: 85 N·m (8.5 kgf-m, 61.5 lb-ft)

5) Lower hoist and bounce vehicle up and down several times to stabilize suspension.
6) Tighten nuts to specified torque.

Tightening torque
Rear shock absorber upper nut (a): 30 N·m (3.0 kgf-m, 22.0 lb-ft)
Rear shock absorber lower nut (b): 90 N·m (9.0 kgf-m, 65.0 lb-ft)

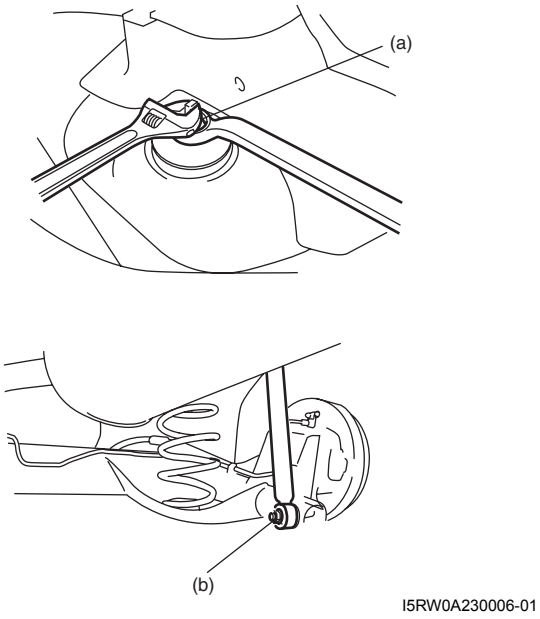

7) For hatchback model, install access hole cover in quarter inner trim.
8) For sedan model, install quarter inner trim.

Rear Shock Absorber Inspection

S7RW0A2306003

- Inspect for deformation or damage.
- Inspect bushes for wear or damage.
- Inspect for evidence of oil leakage.

Replace any defective parts.

⚠ WARNING

When handling rear shock absorber (1) in which high-pressure gas is sealed, make sure to observe the following precautions.

- **Don't disassemble it.**
- **Don't put it into the fire.**
- **Don't store it where it gets hot.**
- **Before disposing it, be sure to drill a hole (approximately 3 mm (0.12 in.) diameter) (2) in it where indicated by arrow in the figure and let gas and oil out.**
  Be sure to wear eye shield since the gas itself is harmless but the absorber drill hole debris maybe blown out.

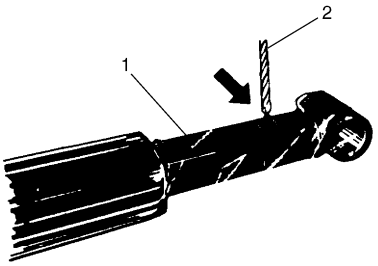

I5RW0A230007-01

Rear Shock Absorber Bush Inspection

S7RW0A2306004

Inspect for cracks, deformation or damage. Replace any defective parts.

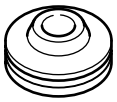

I4RS0A230008-01

Rear Coil Spring Removal and Installation

S7RW0A2306005

⚠ CAUTION

Removal and Installation both coil springs (right and left) at the same time to avoid rear axle twisting and other damage.

Removal

1) Hoist vehicle and remove rear wheels.
2) Dismount rear differential (4WD model) referring to "Rear Differential Dismounting and Remounting in Section 3B".
3) Remove rear fender lining (1) and then loosen rear axle bolt (2) a little.

⚠ CAUTION

Do not reuse rear axle bolt. Otherwise, bolt may loosen.

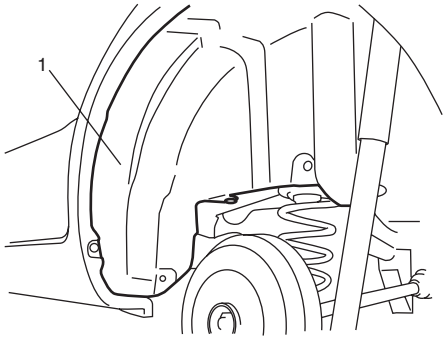

I5RW0A230008-01

4) Support both ends of rear axle (1) by using two floor jacks (2).

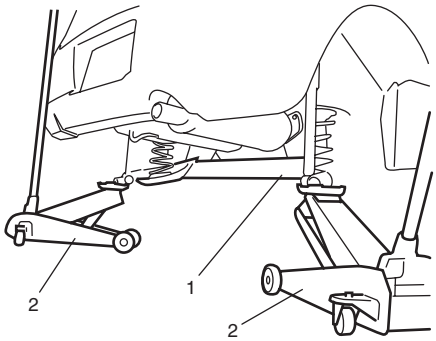

I5RW0A230009-01

5) Detach each lower end (2) of shock absorbers (1) (right and left) from rear axle.
6) Lower rear axle gradually as far down as the coil spring can be removed.

⚠ CAUTION

Be careful not to lower rear axle down too much.
It may cause damage to brake flexible hose, wheel speed sensor lead wire and parking brake cable.

7) Remove coil spring (3).

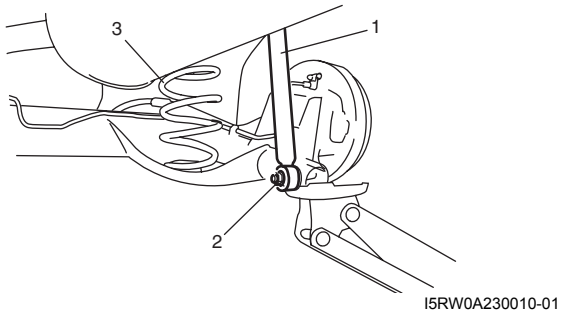

8) Remove spring upper seat (1) from vehicle body and lower seat (2) from rear axle.

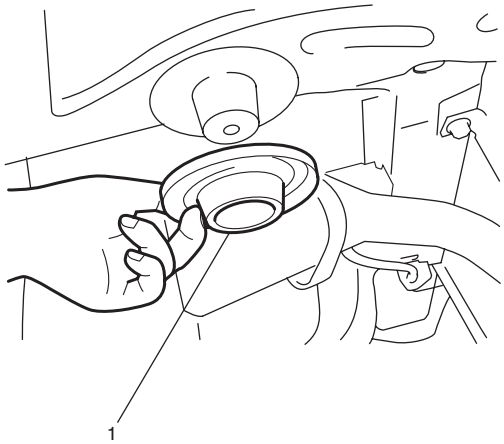

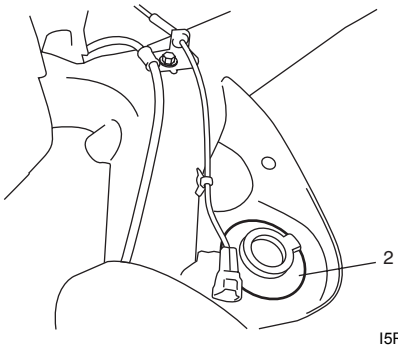

Installation

⚠ CAUTION

Install spring upper seat (1) and spring low seat (2) to specified direction. Otherwise, noise may occur from coil spring while the vehicle is moving.

1) Install spring upper seat (1) to vehicle body and lower seat (2) to rear axle.
2) Install coil spring (3) on spring lower seat (2) of rear axle and place coil spring end (4) onto spring lower seat (2) as shown in figure.

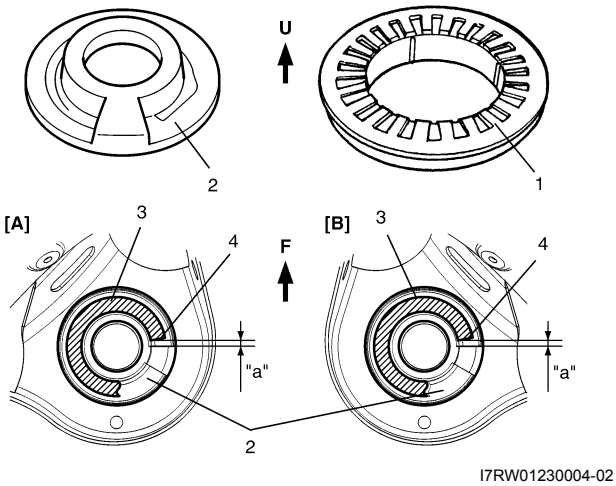

[A]: Left side	F: Forward
[B]: Right side	"a": 10 mm max
U: Upward	

3) Jack up rear axle and then install shock absorbers (1) lower end to rear axle.
Install washers and tighten shock absorber lower nuts (2) temporarily at this step.

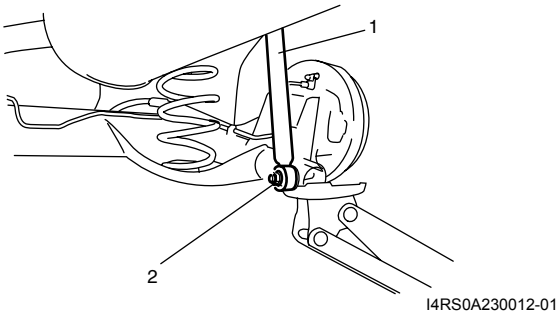

4) Remove floor jacks from rear axle.
5) Remount rear differential (4WD model) referring to “Rear Differential Dismounting and Remounting in Section 3B”.
6) Install wheel and tighten wheel nuts to specified torque.

Tightening torque
Wheel nut: 85 N·m (8.5 kgf-m, 61.5 lb-ft)

7) Lower hoist and bounce vehicle up and down several times to stabilize suspension.
8) Tighten absorber lower nuts and rear axle bolts to specified torque.

NOTE

When tightening these nuts and bolts, be sure that vehicle is not on hoist and in unloaded condition.

Tightening torque
Rear shock absorber lower nut: 90 N·m (9.0 kgf-m, 65.0 lb-ft)
Rear axle bolt: 73 N·m (7.3 kgf-m, 53.0 lb-ft)

9) Install rear fender lining.

Spring Upper Seat / Spring Lower Seat Inspection

S7RW0A2306006

Inspect for cracks, deformation or damage.
Replace any defective part.

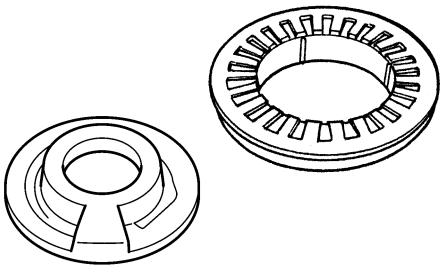

I4RS0A230015-01

Rear Axle Removal and Installation

S7RW0A2306007

⚠ CAUTION

Do not drop brake fluid onto painted surface. Painted surfaces will be damaged.

Removal

1) Hoist vehicle and remove exhaust center pipe and muffler.
2) Disconnect rear height sensor link (if equipped) from rear axle referring to “Height Sensor Removal and Installation (If Equipped) in Section 9B”.
3) Remove rear wheel, rear brake drum and rear wheel hub referring to “Removal” under “Rear Wheel Hub Assembly Removal and Installation”.
4) Disconnect brake pipe (1) from brake flexible hoses (2) and remove E-rings (3).

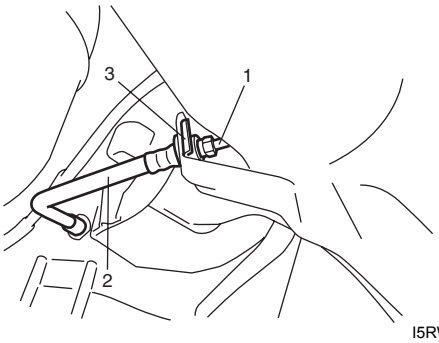

I5RW0A230013-01

5) Remove coil springs referring to “Rear Coil Spring Removal and Installation”.
6) Disconnect wheel speed sensor clamp (1) and parking brake cable nuts (2) from rear axle.

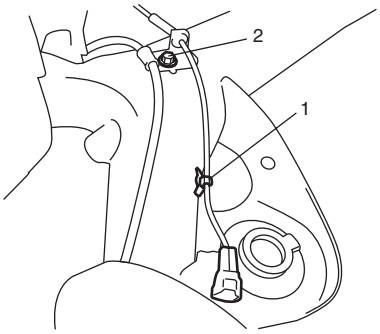

I5RW0A230015-01

7) While supporting rear axle at both ends, remove rear axle bolts and then remove rear axle from chassis by lowering floor jack gradually.
8) Remove brake pipes from rear axle, if necessary.

Installation

⚠ CAUTION

Never reuse rear axle bolts and rear hub bolts.

1) Install brake pipes to rear axle, if removed.
2) Using floor jacks, install rear axle and new rear axle bolts (1) and tighten bolts temporarily.

I5RW0A230017-01

3) Install coil spring referring to “Rear Coil Spring Removal and Installation”.
4) Install rear wheel hub and wheel speed sensor referring to “Installation” under “Rear Wheel Hub Assembly Removal and Installation”.
5) Connect brake flexible hoses (1) to bracket on rear axle with E-ring (2) and tighten brake pipe flare nuts (3) to specified torque.

   Tightening torque
   Brake pipe flare nut (a): 16 N·m (1.6 kgf-m, 11.5 lb-ft)

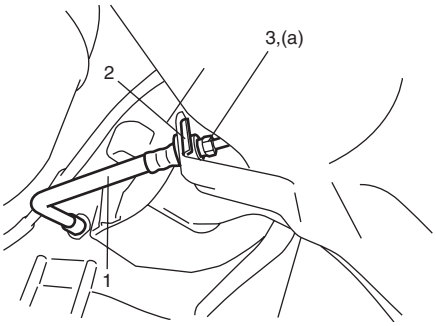

I5RW0A230019-01

6) Connect rear height sensor link (if equipped) to rear axle referring to “Height Sensor Removal and Installation (If Equipped) in Section 9B”.
7) Install exhaust center pipe and muffler.
8) After installing removed parts, bleed air from brake system referring to “Air Bleeding of Brake System in Section 4A”. And then adjust parking brake cable referring to “Parking Brake Inspection and Adjustment in Section 4D”.
9) Install wheel and tighten wheel nuts to specified torque.

   Tightening torque
   Wheel nut: 85 N·m (8.5 kgf-m, 61.5 lb-ft)

10) Lower hoist and bounce vehicle up and down several times to stabilize suspension.
11) Tightening shock absorber lower nuts and rear axle bolts to specified torque.

   NOTE

   When tightening these nuts and bolts, be sure that vehicle is not on hoist and in unloaded condition.

   Tightening torque
   Rear shock absorber lower nut: 90 N·m (9.0 kgf-m, 65.0 lb-ft)
   Rear axle bolt: 73 N·m (7.3 kgf-m, 53.0 lb-ft)

12) Perform brake test (foot brake and parking brake).
13) Check each installed parts for brake fluid leakage.

Rear Axle and Coil Spring Inspection

S7RW0A2306008

- Inspect for cracks, deformation or damage.
- Inspect bush for damage, wear or breakage.

Replace any defective part.

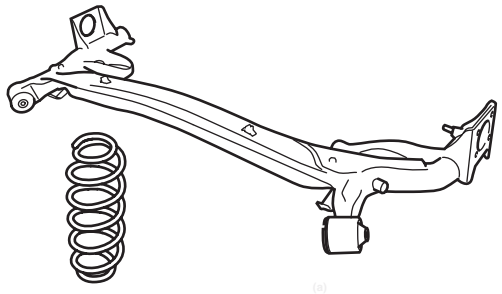

I5RW0A230022-01

Rear Axle Bush Inspection

S7RW0A2306009

Inspect for cracks, deformation or damage. If necessary, replace rear axle assembly.

Rear Wheel Hub Assembly Inspection

S7RW0A2306013

- Check noise and smooth rotation of wheel by rotating wheel.
  If it is defective, replace wheel hub assembly.

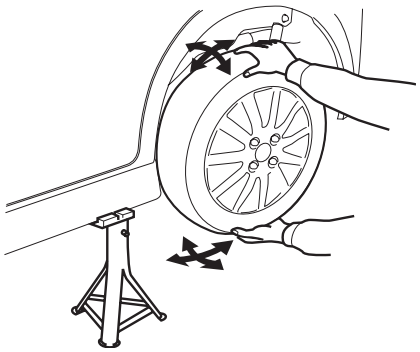

I7RW0A230002-01

- Measure thrust play of wheel hub using dial gauge as shown in figure.
  When the thrust play exceeds limit, replace wheel hub assembly.

  Rear wheel hub thrust play limit
  "a": 0.1 mm (0.004 in.)

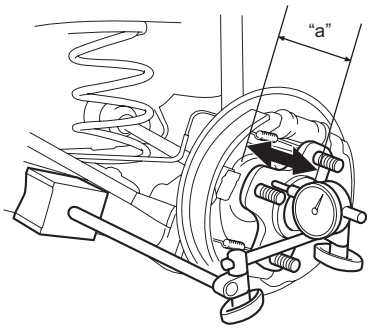

I8RW01230004-01

Rear Wheel Hub Assembly Removal and Installation

S7RW0A2306011

⚠ CAUTION

Do not allow brake fluid to get on painted surfaces. Painted surface will be damaged.

Removal

1) Hoist vehicle. Then remove rear wheel and brake drum.
2) For 4WD model, remove rear drive shaft referring to "Rear Drive Shaft Assembly Removal and Installation: Rear in Section 3A".
3) Remove rear brake shoe.
4) Disconnect brake pipe flare nut (1) from wheel cylinder (3) and put bleeder plug cap (4) onto pipe (2) to prevent fluid from spilling.

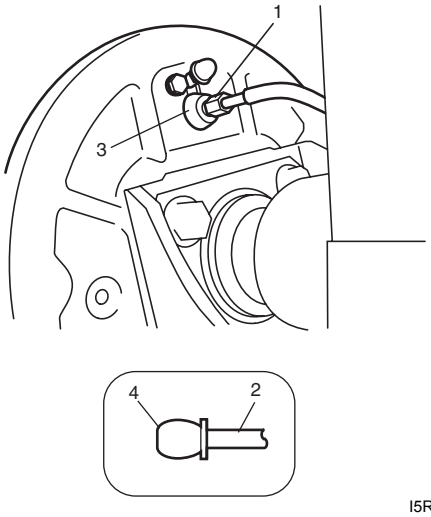

I5RW0A230024-01

5) Disconnect wheel speed sensor connector (1) (4WD model).
6) Remove wheel speed sensor (3) (2WD model).
7) Remove brake back plate (2) and rear wheel hub from rear axle.

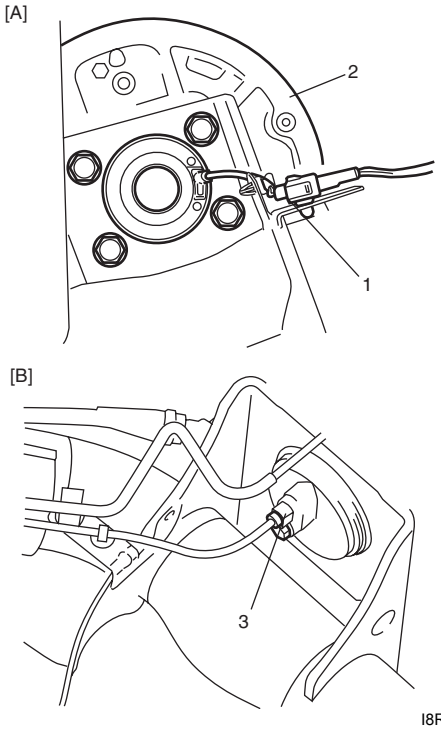

I8RW01230005-01

[A]:	4WD model
[B]:	2WD model

8) If necessary, remove wheel stud bolts (1) with copper hammer or hydraulic press.

⚠ CAUTION

Never remove bolt unless replacement is necessary.
Be sure to use a new bolt for replacement.

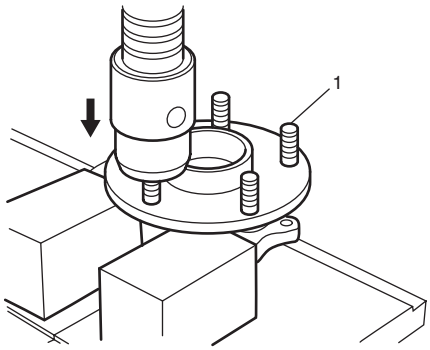

I5JB0A220016-01

Installation

⚠ CAUTION

Rear hub bolt is pre-coated with friction stabilizer.
Never reuse the removed bolt. Otherwise, bolt may loosen.

1) Insert wheel stud bolt (1) in hub hole. Rotate wheel stud bolt slowly to assure that serrations are aligned with those made by original bolt.

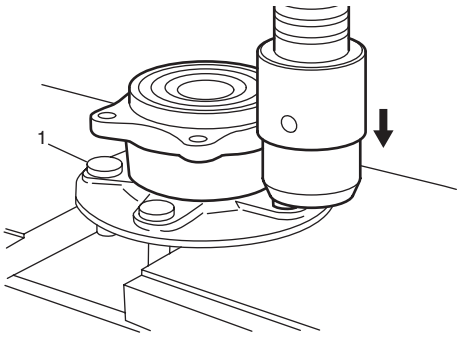

I5JB0A220017-01

2) Install brake back plate, rear wheel hub and new rear hub bolts and then tighten rear hub bolts to specified torque.

Tightening torque
Rear hub bolt (a): 73 N·m (7.3 kgf-m, 53.0 lb-ft)

3) Connect wheel speed sensor connector (1) (4WD model).
4) Install wheel speed sensor (2) and tighten wheel speed sensor bolt to specified torque (2WD model).

Tightening torque
Wheel speed sensor bolt (b): 11 N·m (1.1 kgf-m, 8.0 lb-ft)

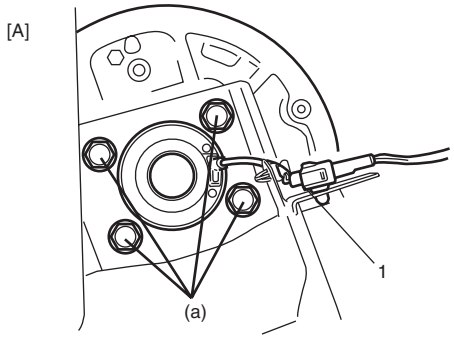

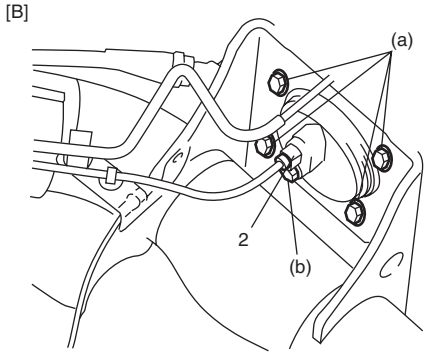

I8RW01230006-01

[A]:	4WD model
[B]:	2WD model

5) Connect brake pipe (1) to wheel cylinder and tighten brake pipe flare nut to specified torque.

Tightening torque
Brake pipe flare nut (a): 16 N·m (1.6 kgf-m, 11.5 lb-ft)

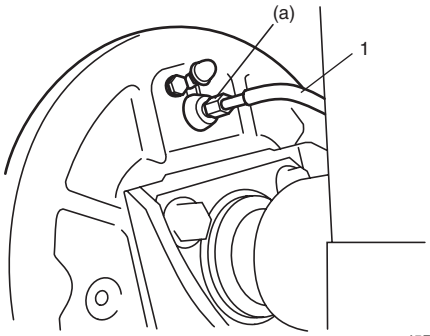

I5RW0A230018-01

6) Install brake drum referring to Step 1) and 2) of "Installation" under "Rear Brake Drum Removal and Installation in Section 4C".
7) Pull up parking brake lever.
   Install new rear drive shaft nut (1) to specified torque, and then caulk drive shaft nut (1) (4WD model).

⚠ CAUTION

- **Never reuse rear drive shaft nut.**
- **Be careful not to damage the rear drive shaft nut while caulking it. If it is damaged, replace it with new one.**

Tightening torque
Drive shaft nut (a): 175 N·m (17.5 kgf-m, 127.0 lb-ft)

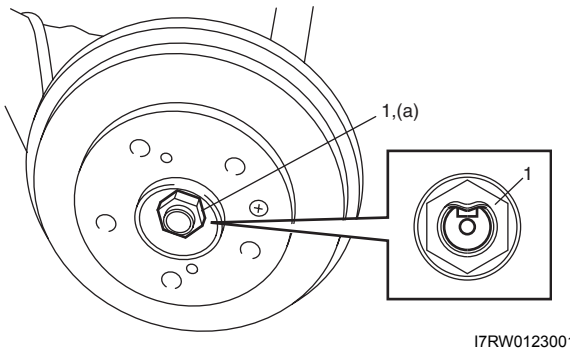

I7RW01230012-01

8) Fill reservoir with brake fluid and bleed brake system. For bleeding operation, refer to "Air Bleeding of Brake System in Section 4A".
9) Install wheel and tighten wheel nuts to specified torque.

   Tightening torque
   Wheel nut: 85 N·m (8.5 kgf-m, 61.5 lb-ft)

10) Adjust parking brake cable. For adjustment, refer to "Parking Brake Inspection and Adjustment in Section 4D".
11) Check to ensure that brake drum is free from dragging and proper braking is obtained.
12) Perform brake test (foot brake and parking brake).
13) Check each installed part for fluid leakage.

Specifications

Tightening Torque Specifications

S7RW0A2307001

Fastening part	Tightening torque			Note
	N·m	kgf-m	lb-ft	
Wheel nut	85	8.5	61.5	☞ / ☞ / ☞ / ☞
Rear shock absorber upper nut	30	3.0	22.0	☞
Rear shock absorber lower nut	90	9.0	65.0	☞ / ☞ / ☞
Rear axle bolt	73	7.3	53.0	☞ / ☞
Brake pipe flare nut	16	1.6	11.5	☞ / ☞
Rear hub bolt	73	7.3	53.0	☞
Wheel speed sensor bolt	11	1.1	8.0	☞
Drive shaft nut	175	17.5	127.0	☞

NOTE

The specified tightening torque is also described in the following.
"Rear Suspension Components"

Reference:
For the tightening torque of fastener not specified in this section, refer to "Fasteners Information in Section 0A".

Wheels and Tires

Precautions

Precautions in Wheels and Tires Servicing

S7RW0A2400001

- Wheel repairs that use welding, heating, or peeling are not approved. All damaged wheels should be replaced.

Studs

If a broken stud is found, replace it referring to “Front Wheel Hub, Steering Knuckle and Wheel Bearing Removal and Installation in Section 2B” or “Rear Wheel Hub Assembly Removal and Installation in Section 2C”.

General Description

Tires Description

S7RW0A2401001

The tire is of tubeless type. The tire is designed to operate satisfactorily with loads up to the full rated load capacity when inflated to the recommended inflation pressures.
Correct tire pressures and driving habits have an important influence on tire life. Heavy cornering, excessively rapid acceleration, and unnecessary sharp braking increase tire wear.

Tire Placard

The “Tire Placard” is located on the left or right door lock pillar and should be referred to tire information.
The placard lists the maximum load, tire size and cold tire pressure where applicable.

NOTE

Whether rim size and/or maximum load are listed or not depends on regulations of each country.

Inflation of Tires

The pressure recommended for any model is carefully calculated to give a satisfactory ride, stability, steering, tread wear, tire life and resistance to bruises.
Tire pressure, with tires cold, (after vehicle has set for 3 hours or more, or driven less than one mile) should be checked monthly or before any extended trip. Set to the specifications on the “Tire Placard” located on the left or right door lock pillar.
It is normal for tire pressure to increase when the tires become hot during driving.
Do not bleed or reduce tire pressure after driving.
Bleeding reduces the “Cold Inflation Pressure”.

Higher than recommended pressure can cause:

- Hard ride
- Tire bruising or carcass damage
- Rapid tread wear at center of tire

Unequal pressure on same axle can cause:

- Uneven braking
- Steering lead
- Reduced handling
- Swerve on acceleration

Lower than recommended pressure can cause:

- Tire squeal on turns
- Hard Steering
- Rapid and uneven wear on the edges of the tread
- Tire rim bruises and rupture
- Tire cord breakage
- High tire temperature
- Reduced handling
- High fuel consumption

Matched Tires and Wheels (Steel Type)

Tires and wheels are match mounted at the assembly plant.
This means that the radially stiffest part of the tire, or “high spot”, is matched to the smallest radius or “low spot” of the wheel.
This is done to provide the smoothest possible ride.
The “high spot” of the tire is originally marked by paint dot (1) on the outboard sidewall. This paint dot will eventually wash off the tire.
The “low spot” of the wheel is originally marked by paint dot (2) on the wheel rim-flange. Properly assembled, the wheel rims’ paint dot should be aligned with the tires’ paint dot as shown in figure.

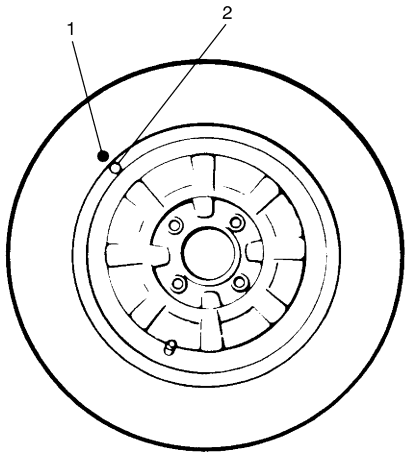

I2RH01240001-01

Whenever a tire is dismounted from its wheel, it should be remounted so that the tire and wheel are matched. If the tire's paint dot cannot be located, a line should be scribed on the tire and wheel before dismounting to assure that it is remounted in the same position.

Replacement Tires

When replacement is necessary, the original equipment type tire should be used. Refer to the Tire Placard. Replacement tires should be of the same size, load range and construction as those originally on the vehicle. Use of any other size or type tire may affect ride, handling, speedometer / odometer calibration, vehicle ground clearance and tire or snow chain clearance to the body and chassis.

It is recommended that new tires be installed in pairs on the same axle. If necessary to replace only one tire, it should be paired with the tire having the most tread, to equalize braking traction.

⚠ WARNING

Do not mix different types of tires on the same vehicle such as radial, bias and bias-belted tires except in emergencies, because handling may be seriously affected and may result in loss of control.

The metric term for tire inflation pressure is the kilo pascal (kPa). Tire pressures is usually printed in both kPa and kgf/cm^2 on the "Tire Placard".

Metric tire gauges are available from tool suppliers.

The chart, shown in the table, converts commonly used inflation pressures from kPa to kgf/cm^2 and psi.

	kPa	kgf/cm^2	psi
Conversion: 1 psi = 6.895 kPa 1 kgf/cm^2 = 98.066 kPa	160	1.6	23
	180	1.8	26
	200	2.0	29
	220	2.2	32
	240	2.4	35
	260	2.6	38
	280	2.8	41
	300	3.0	44
	320	3.2	47
	340	3.4	50

Wheels Description

S7RW0A2401002

Wheel Maintenance

Wheel repairs that use welding, heating, or peening are not approved. All damaged wheels should be replaced.

Replacement Wheels

Wheels must be replaced if they are bent, dented, have excessive lateral or radial runout, air leak through welds, have elongated bolt holes, if lug wheel bolts won't stay tight, or if they are heavily rusted. Wheels with greater runout than shown in the following may cause objectional vibrations.

Replacement wheels must be equivalent to the original equipment wheels in load capacity, diameter, rim with offset and mounting configuration. A wheel of improper size or type may affect wheel and bearing life, brake cooling, speedometer / odometer calibration, vehicle ground clearance and tire clearance to body and chassis.

How to Measure Wheel Runout

To measure the wheel runout, it is necessary to use an accurate dial indicator. The tire may be on or off the wheel. The wheel should be installed to the wheel balancer of the like for proper measurement.

Take measurements of both lateral runout "a" and radial runout "b" at both inside and outside of the rim flange. With the dial indicator set in place securely, turn the wheel one full revolution slowly and record every reading of the indicator.

When the measured runout exceeds the specification and correction by the balancer adjustment is impossible, replace the wheel. If the reading is affected by welding, paint or scratch, it should be ignored.

Lateral runout limit "a"
Aluminum wheel: 0.3 mm (0.012 in.)
Steel wheel: 0.9 mm (0.035 in.)

Radial runout limit "b"
Aluminum wheel: 0.3 mm (0.012 in.)
Steel wheel: 0.7 mm (0.028 in.)

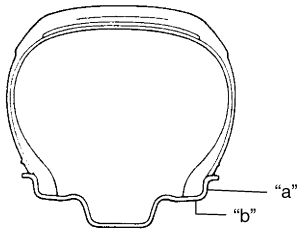

I4RS0A240001-01

Metric Lug Nuts and Wheel Studs

All models use metric lug nuts and wheel studs.

Metric lug nuts and wheel studs size
M12 x 1.25

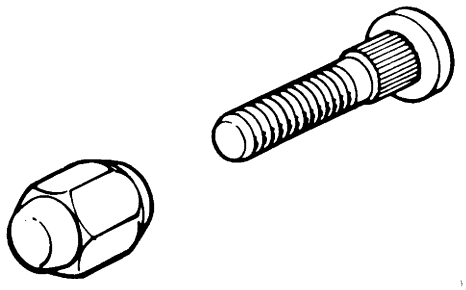

I2RH01240003-01

Irregular and/or Premature Wear Description

S7RW0A2401003

Irregular and premature wear has many causes. Some of them are as follows: incorrect inflation pressures, lack of tire rotation, driving habits, improper alignment.
If the following conditions are noted, tire rotation is necessary:

- Front tire wear is different from rear's.
- Uneven wear exists across tread of any tires.
- Both sides of front tire wears are not even.
- Both sides of rear tire wears are not even.
- There is cupping, flat spotting, etc.

A wheel alignment check is necessary if following conditions are noted:

- Both sides of front tire wears are not even.
- Wear is uneven across the tread of any front tire.
- Front tire treads have scuffed appearance with "feather" edges on one side of tread ribs or blocks.

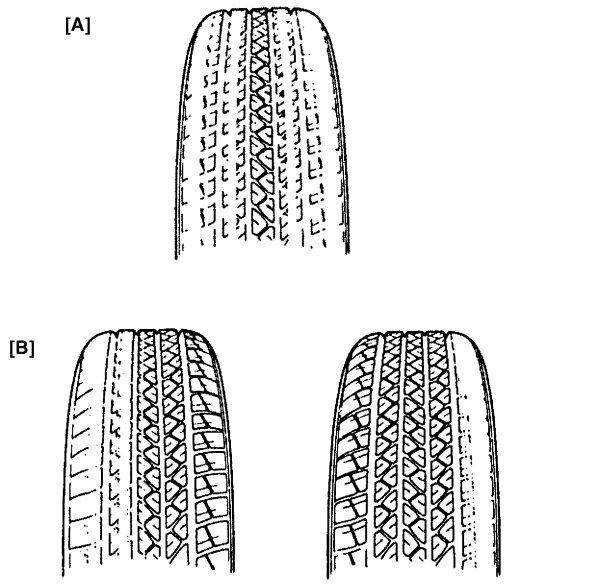

I3RH0A240002-01

[A]:	Hard Cornering, under inflation or lack of tire rotation
[B]:	Incorrect wheel alignment, tire construction not uniform or wheel heavy acceleration

Wear Indicators Description

S7RW0A2401004

Original equipment tires have built-in tread wear indicators (1) to show when they need replacement. These indicators (1) will appear as 12 mm (0.47 in.) wide bands when the tire tread depth becomes 1.6 mm (0.063 in.).
When the indicators (1) appear in 3 or more grooves at 6 locations, tire replacement is recommended.

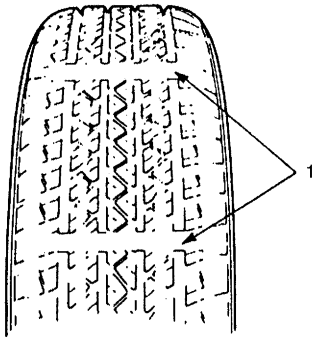

I2RH01240005-01

Radial Tire Waddle Description

S7RW0A2401005

Waddle is side to side movement at the front and/or rear of the vehicle. It is caused by the steel belt not being straight within the tire. It is most noticeable at a low speed, 8 to 48 kph (5 to 30 mph).
It is possible to locate the faulty tire by road testing the vehicle. If it is on the rear, the rear end of the vehicle shakes from side to side or "waddles". To the driver in the seat, it feels as though someone is pushing on the side of vehicle.
If the faulty tire is on the front, waddling is more visual. The front sheet metal appears to be moving back and forth and the driver feels as though he is at the pivot point in vehicle.
Waddle can be quickly diagnosed by using Tire Problem Detector (TPD) and following the equipment manufacture's recommendations.
If TPD is not available, an alternative method of substituting known-good tire / wheel assemblies can be used as follows, although it takes a longer time.

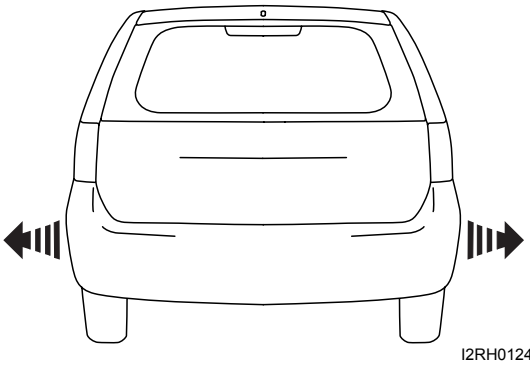

I2RH01240006-01

1) Ride vehicle to determine whether the front or rear waddles.
2) Install tires and wheels that are known to be good (on similar vehicle) in place of those on waddling end of vehicle. If waddling end cannot be identified, substitute rear ones.
3) Road test again. If improvement is noted, reinstall originals one at a time till waddle causal tire is found. If no improvement is noted, install known-good tires in place of all four. Then reinstall originals in the same manner.

Equipment manufacture's recommendations

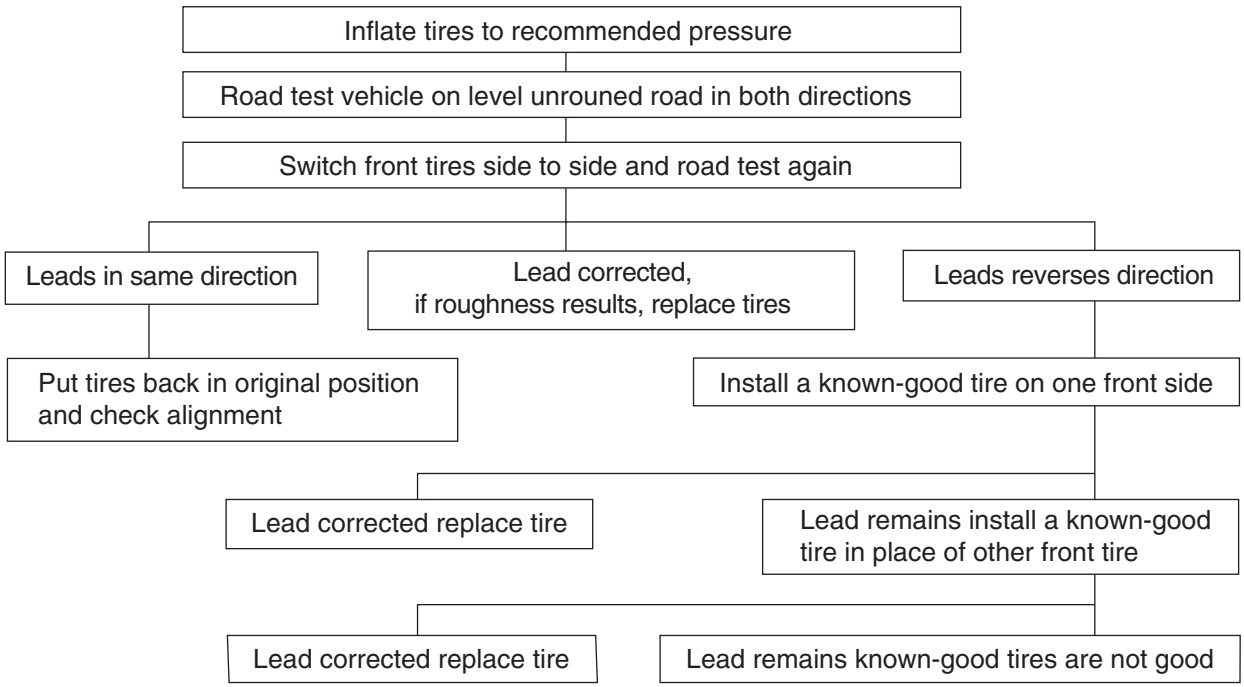

I2RH01240007-01

Radial Tire Lead / Pull Description

S7RW0A2401006

"Lead / Pull" is the deviation of the vehicle from a straight path on a level road even with no pressure on the steering wheel.

Lead is usually caused by the following conditions.

- Improper tire and wheel alignment.
- Uneven brake assemblies.
- Tire construction.

The way in which a tire is built can produce lead in a vehicle. An example of this is placement of the belt. Off center belts on radial tires can cause the tire to develop a side force while rolling straight down the road. If one side of the tire has a little larger diameter than the other, the tire will tend to roll to one side. This will develop a side force which can produce vehicle lead.

The procedure in the figure (Lead Diagnosis) should be used to make sure that wheel alignment is not mistaken for tire lead.

- Part of the lead diagnosis procedure is different from the proper tire rotation pattern currently in the owner and service manuals. If a medium to high mileage tire is moved to the other side of the vehicle, be sure to check that ride roughness has not developed
- Rear tires will not cause lead.

Balancing Wheels Description

S7RW0A2401007

There are two types of wheel and tire balance: static and dynamic. Static balance, as shown in figure, is the equal distribution of weight around the wheel. Wheels that are statically unbalanced cause a bouncing action called tramp. This condition will eventually cause uneven tire wear.

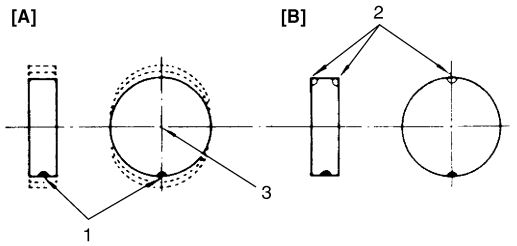

I2RH01240008-01

1. Heavy spot wheel tramp	[A]: Before correction
2. Balance weights addition point	[B]: Corrective weights
3. C/L of spindle	

Dynamic balance, as shown in figure, is the equal distribution of weight on each side of the wheel centerline so that when the tire spins there is no tendency for the assembly to move from side to side. Wheels that are dynamically unbalanced may cause shimmy.

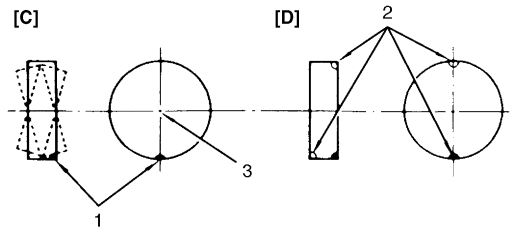

I2RH01240009-01

1. Heavy spot wheel shimmy	[C]: Before correction
2. Balance weights addition point	[D]: Corrective weights
3. C/L of spindle	

Repair Instructions

Wheel Discs Inspection

S7RW0A2406001

Inspect each wheel disc for dents, distortion and cracks. A disc in badly damaged condition must be replaced.

Wheel Balance Inspection and Adjustment

S7RW0A2406002

Refer to “Balancing Wheels Description”.
Deposits of mud, etc. must be cleaned from inside of rim.

⚠ WARNING

Stones should be removed from the tread in order to avoid operator injury during spin balancing and to obtain good balance.

Each tire should be inspected for any damage, then balanced according to equipment manufacturer’s recommendation.

Off-Vehicle Balancing

Most electronic off-vehicle balancers are more accurate than the on-vehicle spin balancers. They are easy to use and give a dynamic (two plane) balance. Although they do not correct for drum or disc unbalance as does on-vehicle spin balancing, this is overcome by their accuracy, usually to within 1/8 ounce.

On-Vehicle Balancing

On-vehicle balancing methods vary with equipment and tool manufacturers. Be sure to follow each manufacturer’s instructions during balancing operation.

⚠ WARNING

Wheel spin should be limited to 55 km/h (35 mph) as indicated on speedometer.
This limit is necessary because speedometer only indicates one-half of actual wheel speed when one drive wheel is spinning and the other drive wheel is stopped.
Unless care is taken in limiting drive wheel spin, spinning wheel can reach excessive speeds. This can result in possible tire disintegration or differential failure, which could cause serious personal injury or extensive vehicle damage.

⚠ CAUTION

For vehicle equipped with ABS, using on-vehicle balancing method with ignition switch ON may set malfunction diagnostic trouble code (DTC) of ABS even when system is in good condition.
Never turn ignition switch ON while spinning wheel.

Tire Rotation

S7RW0A2406003

To equalize wear, rotate tires periodically as shown in figure.
Refer to “Wheel (with Tire) Removal and Installation”.

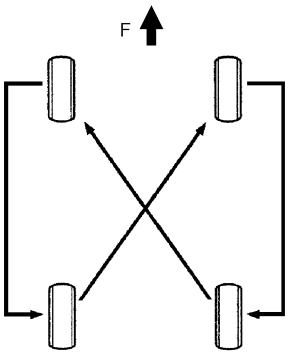

I7RW01240001-02

F: Forward

Wheel (with Tire) Removal and Installation

S7RW0A2406004

Removal

⚠ CAUTION

Never use heat to loosen tight wheel because the application of heat to wheel causes the wheel life shorter and the wheel bearing damage.

1) Loosen wheel nuts by approximately 180° (half a rotation).
2) Hoist vehicle.
3) Make sure that the vehicle will not fall off by trying to move vehicle body in both ways.
4) Remove wheel nuts except one.
5) Support the wheel and/or tire not to drop the wheel and then remove the nut left with the wheel.

Installation

For installation, reverse removal procedure, noting the following.

- Wheel nuts must be tightened in sequence and to specified torque to avoid bending wheel or brake disc or drum as shown in the figure.

NOTE

Before installing wheels, remove any build-up of corrosion on wheel mounting surface and brake disc or drum mounting surface by scraping and wire brushing. Installing wheels without good metal-to-metal contact at mounting surfaces can cause wheel bolts to loosen, which can later allow a wheel to come off while vehicle is moving.

Tightening order
"1" – "2" – "3" – "4" – "5"

Tightening torque
Wheel nut (a): 85 N·m (8.5 kgf-m, 61.5 lb-ft)

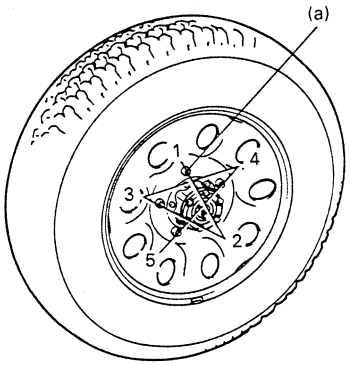

IYSQ01240008-01

Tire Mounting and Dismounting

S7RW0A2406005

⚠ WARNING

Do not stand over tire when inflating. Bead may break when bead snaps over rim's safety hump and cause serious personal injury.
Do not exceed specified pressure when inflating. If specified pressure will not seat beads, deflate, re-lubricate and reinflate. Over inflation may cause bead to break and cause serious personal injury.

Use a tire changing machine to mount or dismount tires. Follow equipment manufacturer's instructions. Do not use hand tools or tire irons alone to change tires as they may damage tire beads or wheel rim.
Rim bead seats should be cleaned with a wire brush or coarse steel wool to remove lubricants, old rubber and light rust. Before mounting or dismounting a tire, bead area should be well lubricated with approved tire lubricant.
After mounting, inflate 330 kPa (47.9 psi) pressure so that beads are completely seated. Then adjust pressure to specified shown in the tire placard.

Tire Repair

S7RW0A2406006

There are many different materials and techniques on the market to repair tires. As not all of these work on all types of tires, tire manufacturers have published detailed instructions on how and when to repair tires. These instructions can be obtained from each tire manufacturer.

Specifications

Wheels and Tires Specifications

S7RW0A2407001

Hatchback model

Tire size (Standard)
: 205/60 R16 92H

Wheel size (Standard)
: 16 x 6J (for 205/60 R16)

Sedan model

Tire size (Standard)
: 195/65 R15 91H

Wheel size (Standard)
: 15 x 6J (for 195/65 R15)

Tightening torque
Wheel nut: 85 N·m (8.5 kgf-m, 61.5 lb-ft)

NOTE

- **Tire inflation pressure should be checked when tires are cool.**
- **Specified tire inflation pressure should be found on tire placard or in owner's manual which came with the vehicle.**

Tightening Torque Specifications

S7RW0A2407002

Fastening part	Tightening torque			Note
	N·m	kgf-m	lb-ft	
Wheel nut	85	8.5	61.5	☞ / ☞

Reference:
For the tightening torque of fastener not specified in this section, refer to "Fasteners Information in Section 0A".

Section 3

Driveline / Axle

CONTENTS

Precautions 3-1
Precautions 3-1
Precautions on Driveline / Axle 3-1

Drive Shaft / Axle 3A-1
Front 3A-1
General Description 3A-1
Front Drive Shaft Construction 3A-1
Component Location 3A-1
Front Drive Shaft Assembly Components Location 3A-1
Diagnostic Information and Procedures 3A-2
Front Drive Shaft Symptom Diagnosis 3A-2
Repair Instructions 3A-2
Front Drive Shaft Components 3A-2
Front Drive Shaft Assembly On-Vehicle Inspection 3A-3
Front Drive Shaft Assembly Removal and Installation 3A-3
Front Drive Shaft Disassembly and Reassembly 3A-4
Center Shaft and Center Bearing Support Disassembly and Reassembly (If Equipped) .. 3A-12
Specifications 3A-13
Tightening Torque Specifications 3A-13
Special Tools and Equipment 3A-14
Recommended Service Material 3A-14
Special Tool 3A-14
Rear 3A-15
General Description 3A-15
Rear Drive Shaft Construction 3A-15
Repair Instructions 3A-15
Rear Drive Shaft Components 3A-15
Rear Drive Shaft Assembly Removal and Installation 3A-16
Rear Drive Shaft Disassembly and Reassembly 3A-16
Specifications 3A-18
Tightening Torque Specifications 3A-18
Special Tools and Equipment 3A-18
Recommended Service Material 3A-18
Special Tool 3A-18

Differential 3B-1
Precautions 3B-1
Precaution for Rear Differential Oil Leakage 3B-1
Precautions in Diagnosing Trouble 3B-1
General Description 3B-2
Rear Differential Description 3B-2
Coupling Description 3B-2
4WD Control System Description 3B-3
Function of 4WD Control System Component 3B-3
Input / Output Signal Table of 4WD Control Module 3B-4
On-Board Diagnostic System Description 3B-4
CAN Communication System Description 3B-5
Schematic and Routing Diagram 3B-6
4WD Control System Wiring Circuit Diagram 3B-6
Component Location 3B-8
4WD Control System Components Location 3B-8
Diagnostic Information and Procedures 3B-9
4WD Control System Check 3B-9
4WD Position Indicator Operation Check 3B-11
4WD Control System Operation Inspection 3B-11
Visual Inspection 3B-12
DTC Check 3B-12
DTC Clearance 3B-12
DTC Table 3B-13
Fail-Safe Table 3B-13
Scan Tool Data 3B-14
Rear Differential Symptom Diagnosis 3B-15
4WD Control Symptom Diagnosis 3B-15
4WD Position Indicator Does Not Come ON at Ignition Switch ON but Engine Stops 3B-16
4WD Position Indicator Remains ON Steady at Ignition Switch ON 3B-17
DTC C1240: 4WD Control Module Power Supply Circuit Malfunction 3B-18
DTC C1243: Internal Circuit Malfunction of 4WD Control Module 3B-19
DTC C1250: Coupling Air Temperature Sensor Circuit Open 3B-19
DTC C1251: Coupling Air Temperature Sensor Circuit Short 3B-21
DTC C1252: Coupling Assembly Circuit Open .. 3B-22
DTC C1253: Coupling Assembly Circuit Short .. 3B-24
DTC C1254: 2WD/4WD Switch Malfunction 3B-25
DTC U0073: Control Module Communication Bus Off 3B-27

DTC U0100: Lost Communication with ECM 3B-27
DTC U0121: Lost Communication with ABS / ESP® Control Module 3B-27
DTC U0155: Lost Communication with Instrument Panel Cluster (IPC) Control Module 3B-27
Inspection of 4WD Control Module and Its Circuits 3B-27
Repair Instructions 3B-30
Rear Differential Oil Level Check 3B-30
Rear Differential Oil Change 3B-30
2WD/4WD Switch Removal and Installation 3B-31
2WD/4WD Switch Inspection 3B-31
4WD Control Module Removal and Installation 3B-31
Coupling Air Temperature Sensor Removal and Installation 3B-31
Coupling Air Temperature Sensor Inspection 3B-32
Coupling Assembly Inspection 3B-32
Rear Differential Mountings Components 3B-33
Front Mounting Arm and/or Rear Mounting Bracket Assembly Removal and Installation 3B-34
Rear Mounting Bracket Assembly Disassembly and Reassembly 3B-34
Rear Differential Dismounting and Remounting 3B-34
Rear Differential Components 3B-35
Rear Differential Disassembly and Reassembly 3B-36
Rear Differential Inspection 3B-47
Specifications 3B-48
Tightening Torque Specifications 3B-48
Special Tools and Equipment 3B-48
Recommended Service Material 3B-48
Special Tool 3B-49

Transfer 3C-1

General Description 3C-1
Transfer Description 3C-1
Diagnostic Information and Procedures 3C-1
Transfer Symptom Diagnosis 3C-1
Repair Instructions 3C-2
Transfer Oil Level Check 3C-2
Transfer Oil Change 3C-2
Transfer Dismounting and Remounting 3C-3
Transfer Assembly Components 3C-4
Transfer Assembly Disassembly and Reassembly 3C-5
Reduction Drive Gear Assembly Disassembly and Reassembly 3C-7
Reduction Driven Gear Assembly Disassembly and Reassembly 3C-8
Transfer Right Case and Left Case Disassembly and Reassembly 3C-9
Transfer Output Retainer Assembly Disassembly and Reassembly 3C-10
Transfer Assembly Inspection 3C-14
Bevel Gear Tooth Contact Inspection 3C-14
Specifications 3C-16
Tightening Torque Specifications 3C-16
Special Tools and Equipment 3C-17
Recommended Service Material 3C-17
Special Tool 3C-17

Propeller Shaft 3D-1

Precautions 3D-1
Propeller Shaft Caution 3D-1
General Description 3D-1
Propeller Shaft Construction 3D-1
Diagnostic Information and Procedures 3D-1
Propeller Shaft Symptom Diagnosis 3D-1
Repair Instructions 3D-2
Propeller Shaft Joint Check 3D-2
Propeller Shaft Assembly Removal and Installation 3D-2
Propeller Shaft Inspection 3D-2
Specifications 3D-3
Tightening Torque Specifications 3D-3

Precautions

Precautions

Precautions on Driveline / Axle

S7RW0A3000001

Precaution for Rear Differential Oil Leakage
Refer to “Precaution for Rear Differential Oil Leakage in Section 3B”.

Precaution in Diagnosing Trouble
Refer to “Precautions in Diagnosing Trouble in Section 3B”.

Precaution on CAN Troubleshooting
Refer to “Precaution on CAN Troubleshooting in Section 1A”.

Drive Shaft / Axle

Front

General Description

Front Drive Shaft Construction

S7RW0A3111001

A constant velocity ball joint is used on the wheel side of both right and left side drive shaft assemblies. For A/T vehicle, a tripod type constant velocity joint is used on the differential side and center shaft side. For M/T vehicle, a double offset type constant velocity joint (DOJ) is used on the differential side and center shaft side. The drive shaft can slide through the tripod joint or the double offset joint (DOJ) in the extension/contraction direction.

Component Location

Front Drive Shaft Assembly Components Location

S7RW0A3113001

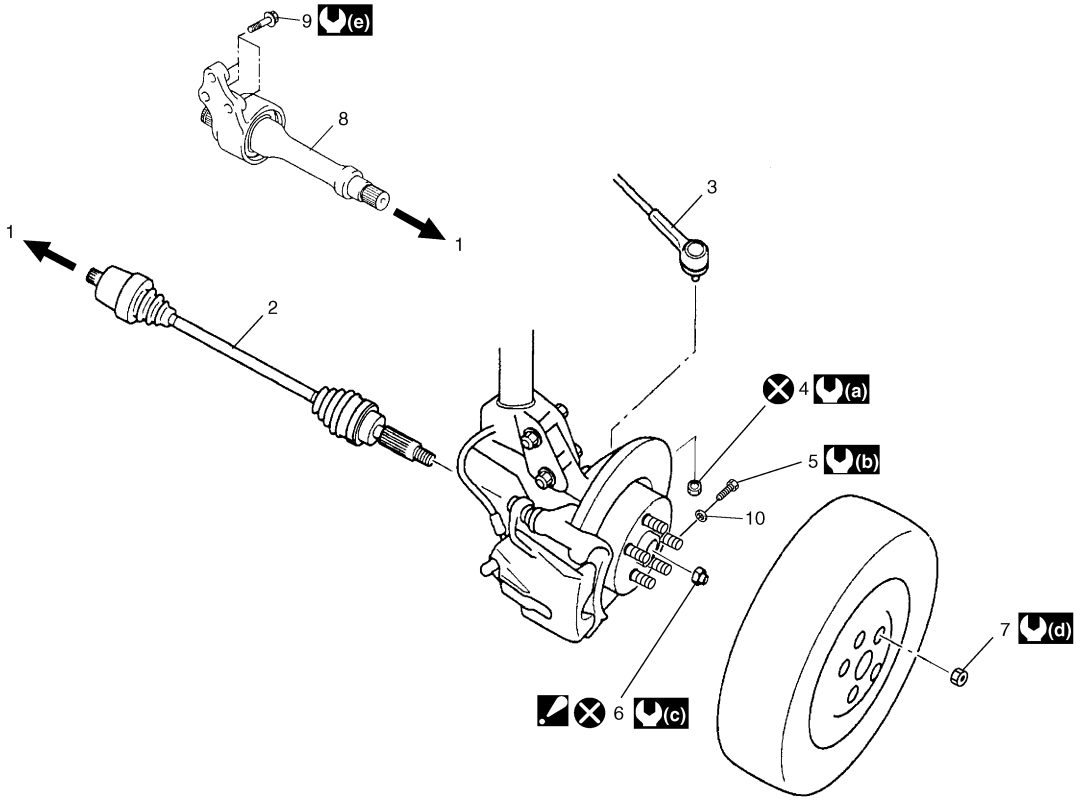

I6RW0D311001-01

1. To transaxle	7. Wheel nut	(c) : 200 N·m (20.0 kgf-m, 145.0 lb-ft)
2. Drive shaft assembly	8. Center shaft assembly (if equipped)	(d) : 85 N·m (8.5 kgf-m, 61.5 lb-ft)
3. Tie-rod end	9. Center bearing support bolts (if equipped)	(e) : 55 N·m (5.5 kgf-m, 40.0 lb-ft)
4. Tie-rod end nut	10. Washer	⊗ : Do not reuse.
5. Ball stud bolt	(a) : 45 N·m (4.5 kgf-m, 32.5 lb-ft)	
6. Drive shaft nut : After tightening nut to specified torque, caulk nut securely.	(b) : 60 N·m (6.0 kgf-m, 43.5 lb-ft)	

Diagnostic Information and Procedures

Front Drive Shaft Symptom Diagnosis

S7RW0A3114001

Condition	Possible cause	Correction / Reference Item
Abnormal noise	Worn or breakage of the drive shaft joint	*Replace.*
	Worn or breakage of the center bearing	*Replace.*

Repair Instructions

Front Drive Shaft Components

S7RW0A3116001

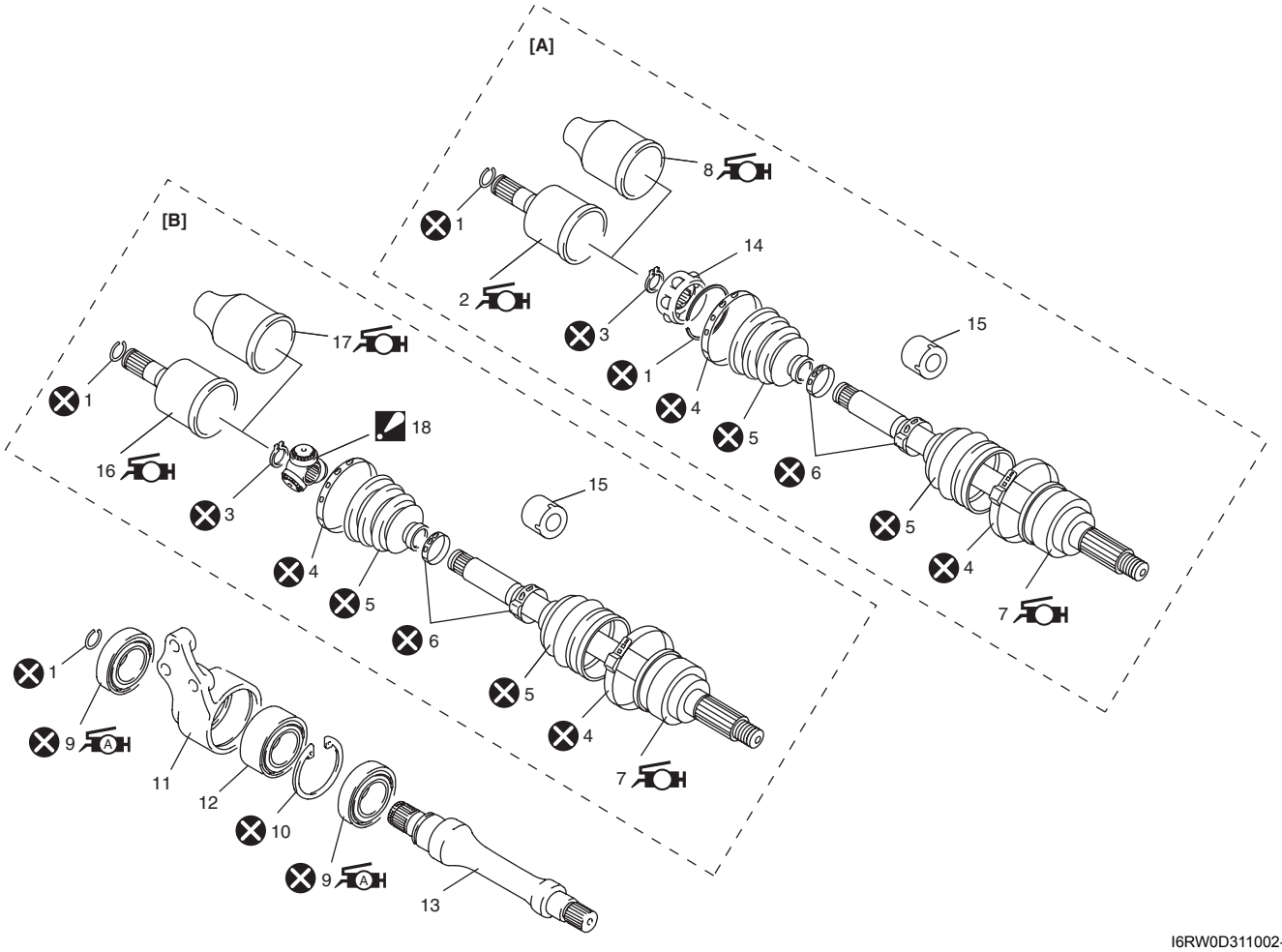

I6RW0D311002-01

[A]: M/T model	10. Center bearing support circlip
[B]: A/T model	11. Center bearing support
1. Circlip	12. Center bearing
2. Differential side joint (Constant velocity DOJ) : Apply dark gray grease included in spare part to joint.	13. Center shaft
3. Snap ring	14. Cage
4. Boot band (Large)	15. Damper (if equipped)
5. Boot	16. Differential side joint (Constant velocity tripod joint) : Apply dark gray grease included in spare part to joint.
6. Boot band (Small)	17. Center shaft side joint (Constant velocity tripod joint) : Apply dark gray grease included in spare part to joint.
7. Wheel side joint (Constant velocity ball joint) : Apply black grease included in spare part to joint.	18. Tripod joint spider : Never disassemble.
8. Center shaft side joint (Constant velocity DOJ) : Apply dark gray grease included in spare part to joint.	: Do not reuse.
9. Oil seal : Apply grease to oil seal lip.	

Front Drive Shaft Assembly On-Vehicle Inspection

S7RW0A3116002

- Check boots for breakage or deterioration.
- Check wheel side joint for rattle or smooth rotation.
- Check differential side (or center shaft side) joint for smooth rotation.
  If any abnormality is found, replace.

Front Drive Shaft Assembly Removal and Installation

S7RW0A3116003

Removal

1) Hoist vehicle and remove front wheel.
2) Undo caulking and remove drive shaft nut (1) with brake pedal depressed.

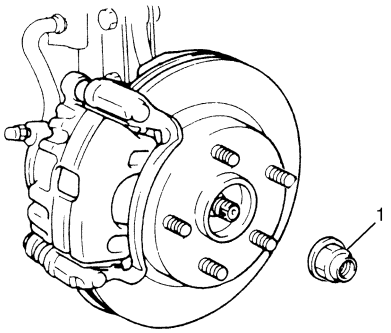

I6RW0B310005-01

3) Drain transaxle oil and transfer oil (4WD model).
4) Disconnect tie-rod end (1) from steering knuckle (2) using puller (3).

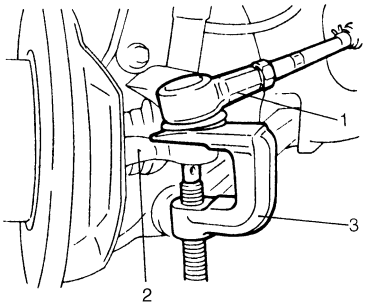

I3RM0A310003-01

5) Remove brake hose mounting bolt (1) and brake hose (2) from bracket and then detach wheel speed sensor harness (3) from strut bracket.
6) Remove suspension control arm ball joint bolt (4) from knuckle.

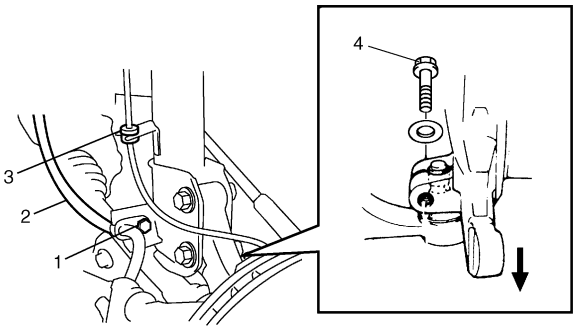

I6RW0D311003-01

7) Disconnect front suspension control arm ball joint stud from steering knuckle.
8) Using tire lever (1) or plastic hammer (3), pull out drive shaft joint (2) so as to release snap ring fitting of joint spline at differential side, at center shaft or at transfer side.

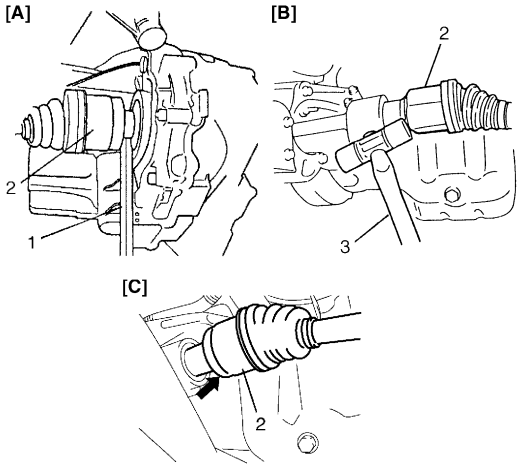

I5RW0A311003-01

[A]:	Left side shaft
[B]:	Right side shaft of 2WD vehicle
[C]:	Right side shaft of 4WD vehicle

9) Remove drive shaft assembly.
10) Remove center bearing support bolts (3) and remove center bearing support (2) with center shaft (1) from differential side gear, if equipped.

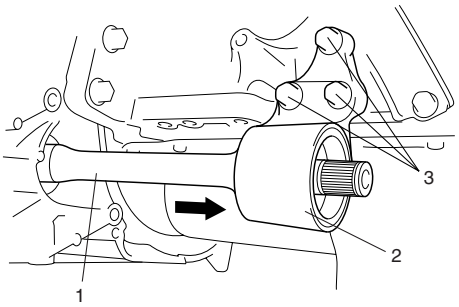

I2RH01310007-01

Installation

⚠ CAUTION

- **Be careful not to damage oil seals and boots when installing drive shaft.**
- **Do not hit joint boot with hammer. Inserting joint only by hands is allowed.**
- **Make sure that differential side joint is inserted fully and its snap ring is seated as it was.**

Install drive shaft assembly by reversing removal procedure and noting the following points.

- Tighten each bolt and nut to the specified torque referring to “Front Drive Shaft Assembly Components Location: Front”.
- Tighten brake hose mounting bolt to specified torque.

  Tightening torque
  Brake hose mounting bolt: 25 N·m (2.5 kgf-m, 18.0 lb-ft)

- Fill transaxle with oil as specified referring to “Manual Transaxle Oil Change in Section 5B” or “A/T Fluid Change in Section 5A” and “Transfer Oil Change in Section 3C” (4WD model).
- Check toe setting referring to “Front Wheel Alignment Inspection and Adjustment in Section 2B” and adjust as required.

Front Drive Shaft Disassembly and Reassembly

S7RW0A3116004

Disassembly
For DOJ type

⚠ CAUTION

Disassembly of wheel side joint is not allowed. If any noise or damage exists in it, replace it as assembly.

1) Remove differential side (or center shaft side) boot big band (1) as follows.
   - For boot big band without joint [A]:
     Remove boot big band by tapping boot and band with plastic hammer. If it is hard to remove boot big band, cut it using a nipper or an iron saw with care not to damage joint housing.
   - For boot big band with joint [B]:
     Draw hooks of boot big band together and remove band.

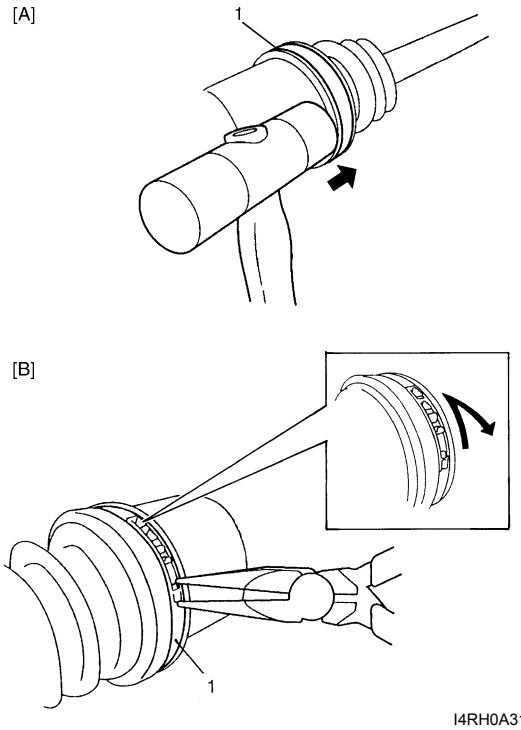

I4RH0A310004-01

2) Remove differential side (or center shaft side) boot small band (1) using flat end rod (2) or the like.

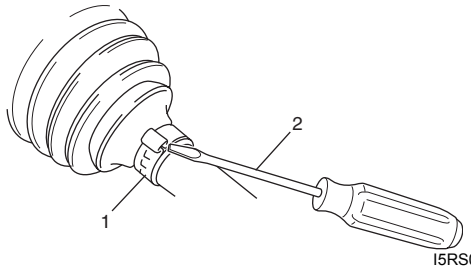

I5RS0B310005-01

3) Slide boot (1) toward the center of shaft and remove snap ring (2) from outer race, and then take shaft out of outer race (3).

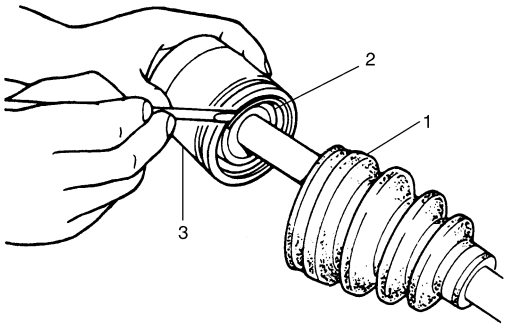

I2RH01310012-01

4) Wipe off grease and remove circlip (1) used to fix cage (2) by using snap ring pliers (3).

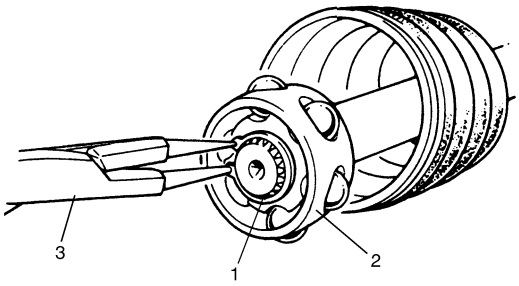

I5RS0B310006-01

5) Draw away cage (1) by using bearing puller (2), and remove boot (3) from shaft.

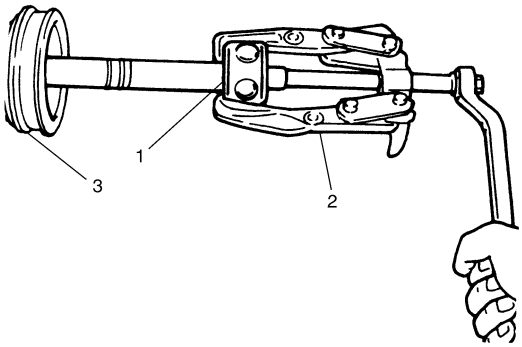

I2RH01310014-01

6) Pull out differential side (or center shaft side) boot and damper from shaft.

7) Undo caulking (5) of wheel side boot big band (1) and small band (3) using flat end rod (2) or the like, then pull out wheel side boot (4) from shaft.

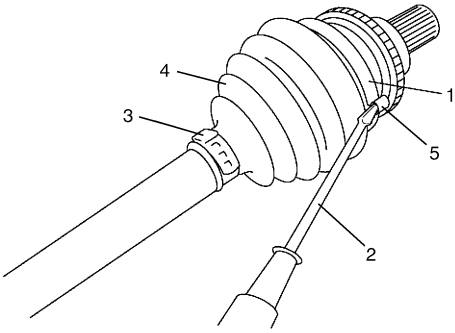

I4RS0A310006-01

For tripod joint type

⚠ CAUTION

- **Disassembly of wheel side joint is not allowed. If any noise or damage exists in it, replace it as assembly.**
- **Do not disassemble tripod joint spider. If any malcondition is found in it, replace it as differential side joint assembly.**

1) Remove differential side (or center shaft side) boot big band (1) as follows.
   - For boot big band without joint:
     Remove boot big band by tapping boot and band with plastic hammer. If it is hard to remove boot big band, cut it using a nipper or an iron saw with care not to damage joint housing.
   - For boot big band with joint:
     Draw hooks of boot big band together and remove band.

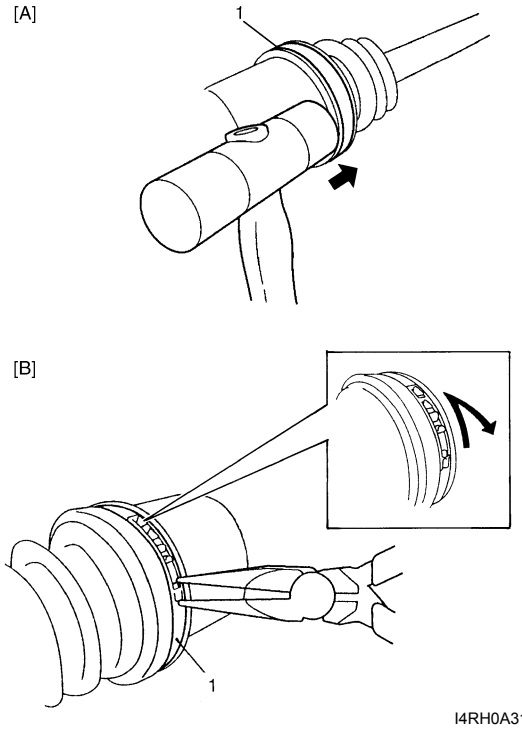

I4RH0A310004-01

[A]:	For boot big band without joint
[B]:	For boot big band with joint

2) Wipe off grease from shaft and take off snap ring (1) using snap ring pliers (2).

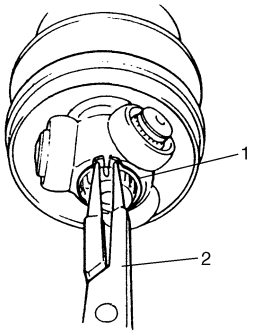

I7RW01311003-01

3) Remove tripod joint spider (1) using 3 arms puller (2).

⚠ CAUTION

To prevent any problem caused by washing solution, do not wash tripod joint except its housing. Degreasing of tripod joint with cloth is allowed.

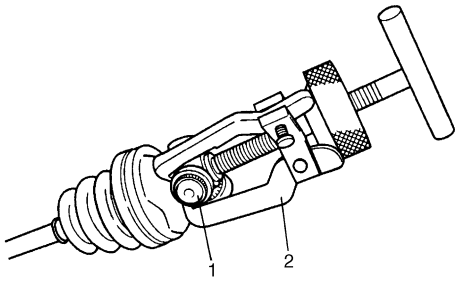

I3RH0A311004-01

4) Remove differential side (or center shaft side) boot small band, and then pull out differential side (or center shaft side) boot from shaft.
5) Remove damper from shaft, if equipped.
6) Undo caulking (5) of wheel side boot big band (1) and small band (3) using flat end rod (2) or the like, then pull out wheel side boot (4) from shaft.

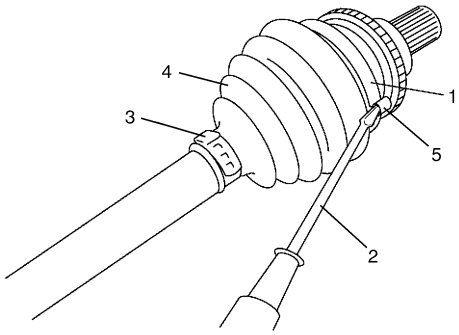

I4RS0A310006-01

Reassembly

For DOJ type

Judging from abnormality noted before disassembly and what is found through visual check of component parts after disassembly, prepare replacing parts and proceed to reassembly.
Make sure that wheel side joint assembly and DOJ housing are washed thoroughly and air dried.
Replace boot(s) with new one(s).

⚠ CAUTION

- **Do not wash boots in degreaser such as gasoline or kerosene. etc. Washing in degreaser causes deterioration of boot.**
- **To ensure full performance of joint as designed, be sure to distinguish between two types of grease in repair set and apply specified volume to respective joint referring to the followings for identification of the grease.**

1) Wash disassembled parts (except boots). After washing, dry parts completely by blowing air.
2) Clean boots with cloth.
3) Apply grease to wheel side joint. Use specified grease in tube in wheel side boot set as a spare parts.

   Grease color
   : Black

   Amount
   : 55 – 75 g (1.9 – 2.6 oz)

4) Install wheel side boot on shaft.
5) Fill up boot inside with specified grease.
6) Fit boot (1) to grooves of shaft and housing (2).
7) Insert screw driver into boot and allow air to enter boot so that air pressure in boot becomes the same as atmospheric pressure.

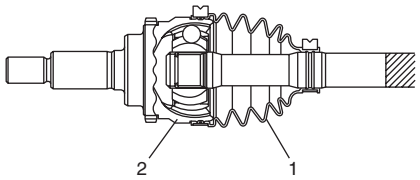

I5RS0B310007-01

8) Place new wheel side boot big band (3) and small band (4) onto boot putting band outer end (1) against forward rotation (2) as shown in figure.

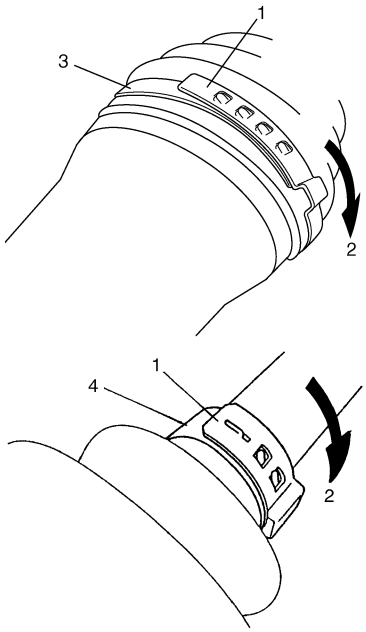

I4RS0A310009-01

9) Fasten boot bands (1) using special tool as shown in figure.

⚠ CAUTION

Do not squeeze or distort boot when fastening it with bands.
Distorted boot caused by squeezing air may reduce its durability.

Distance "a"
: 2.6 ± 1.4 mm (0.102 ± 0.055 in.)

Special tool
(A): 09943–57010

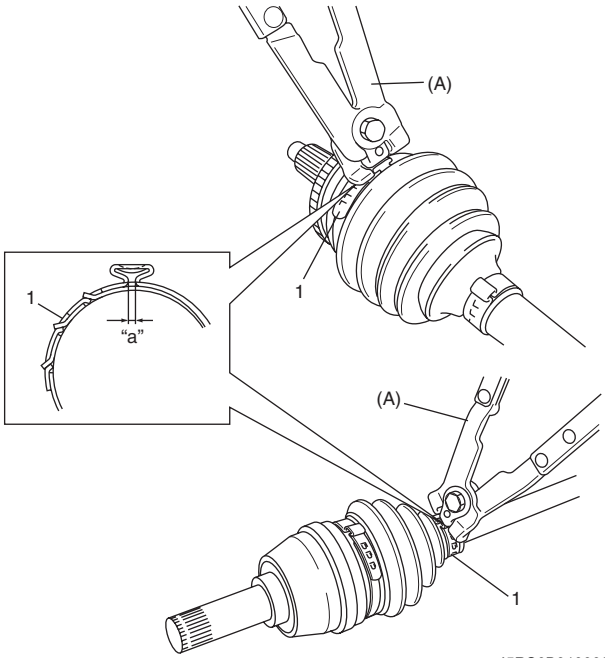

I5RS0B310008-01

10) Install damper (1) to specified position on drive shaft.

Drive shaft damper installing position
"a": 354 mm (13.9 in.) (right side)
"a": 252 mm (9.9 in.) (left side)

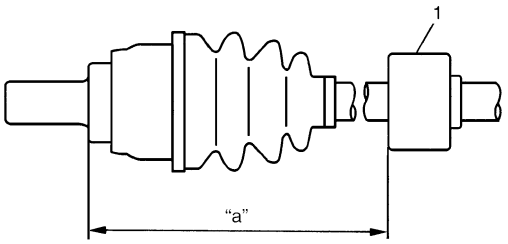

I5RW0A311004-01

11) Set new differential side (or center shaft side) small band and new differential side (or center shaft side) boot on shaft temporarily.

12) Drive in the cage (1) by using special tool.

Special tool
(A): 09913–84510

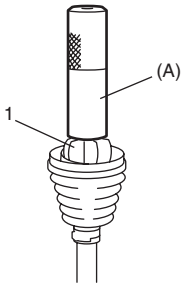

I5RS0B310009-01

13) Install circlip (1) by using snap ring pliers (2).

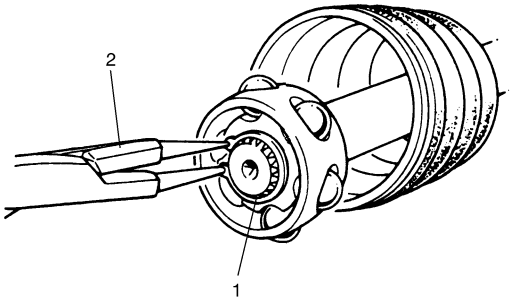

I5RS0B310010-01

14) Apply grease to entire surface of cage. Use specified grease in tube included in spare parts.

15) Insert cage into joint housing (2) and fit snap ring (1) into groove of joint housing (2).

⚠ CAUTION

Position opening of snap ring "c" so that it will not be lined up with a ball.

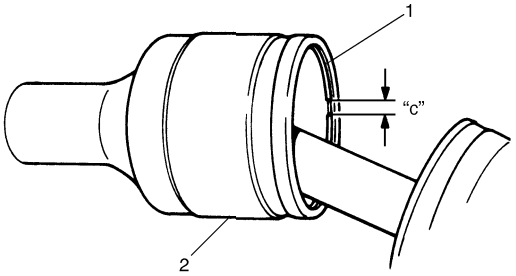

I2RH01310036-01

16) Apply grease (including in spare parts) to inside of joint housing (1).

Grease color
"A": Dark gray

Amount
"A": 75 – 95 g (2.6 – 3.4 oz) (right side)
"A": 70 – 90 g (2.5 – 3.2 oz) (left side)

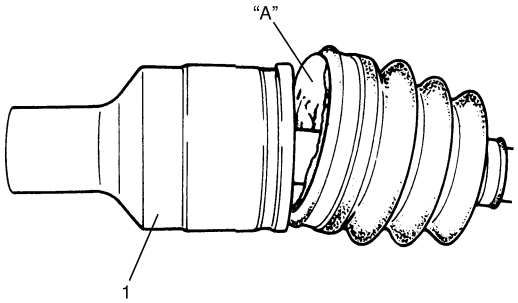

I5RS0B310011-02

17) Fit boot (1) to grooves of shaft and housing (2) and adjust length to specification below.
Insert screw driver into boot and allow air to enter boot so that air pressure in boot becomes the same as atmospheric pressure.

Drive shaft boot fixing position (distance between housing end and small boot band center)
Left side drive shaft "a": 170 mm (6.69 in.)
Right side drive shaft "b": 189 mm (7.44 in.)

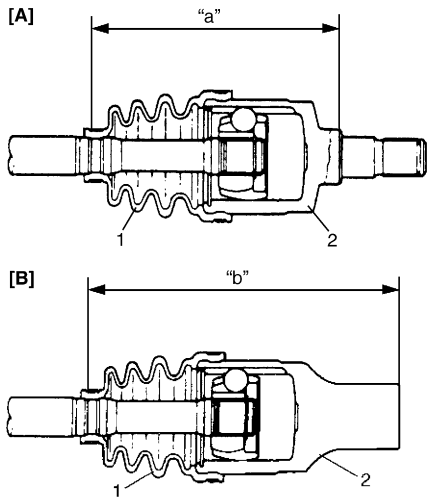

I5RW0A311005-01

[A]:	Left side drive shaft
[B]:	Right side drive shaft

⚠ CAUTION

- **Bend each boot band against forward rotation.**
- **Do not squeeze or distort boot when fastening it with bands. Distorted boot caused by squeezing air may reduce its durability.**

18) Place differential side boot (or center shaft side) new big band (3) and new small band (4) onto boot putting band outer end (1) against forward rotation (2) as shown in figure.

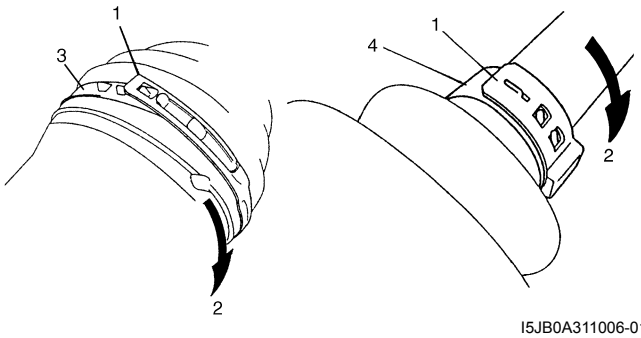

I5JB0A311006-01

19) Fasten differential side (or center shaft side) boot band.

- For differential side (or center shaft side) boot big band
  Fasten band (1) by drawing hooks (2) with special tool and engage hooks (3) in slot and window (4).

  Special tool
  (A): 09943–57021

- For differential side (or center shaft side) boot small band
  Fasten band (5) using special tool as shown in figure.

  Distance "a"
  : 2.6 ± 1.4 mm (0.102 ± 0.055 in.)

  Special tool
  (B): 09943–57010

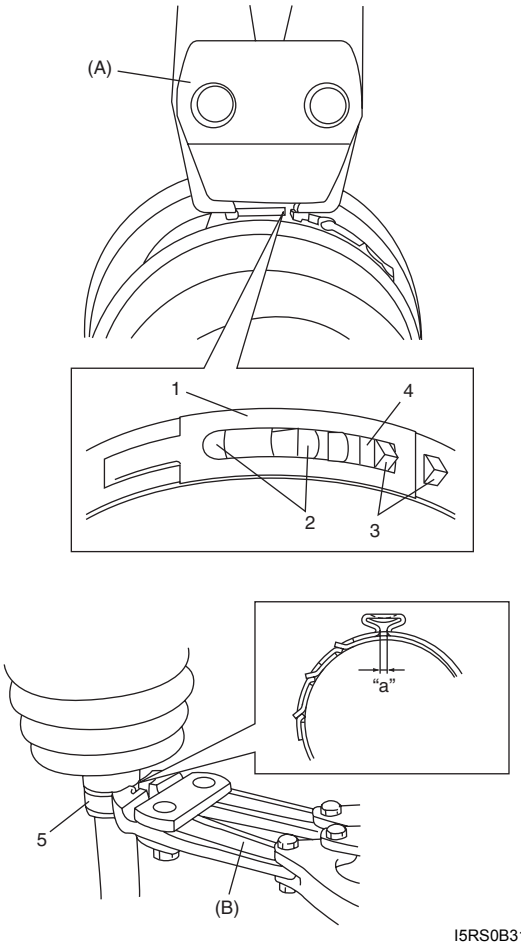

I5RS0B310013-01

For tripod joint type

Judging from abnormality noted before disassembly and what is found through visual check of component parts after disassembly, prepare replacing parts and proceed to reassembly.

Make sure that wheel side joint assembly (1) and tripod joint housing (2) are washed thoroughly and air dried.

Replace boot(s) (3) with new one(s).

⚠ CAUTION

- **Do not wash boots in degreaser such as gasoline or kerosene. etc. Washing in degreaser causes deterioration of boot.**
- **To ensure full performance of joint as designed, be sure to distinguish between two types of grease in repair set and apply specified volume to respective joint referring to the followings for identification of the grease.**

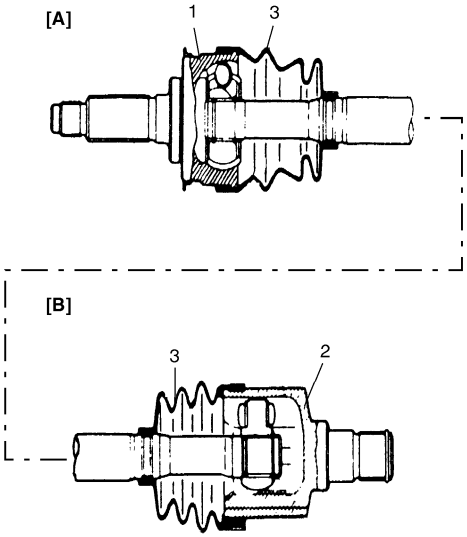

I4RS0A310007-01

[A]:	Wheel side
[B]:	Differential side (or center shaft side)

1) Wash disassembled parts (except boots). After washing, dry parts completely by blowing air.
2) Clean boots with cloth.
3) Apply grease to wheel side joint. Use specified grease in tube in wheel side boot set as a spare parts.

   Grease color
   : Black

   Amount
   : 55 – 75 g (1.9 – 2.6 oz)
4) Install wheel side boot on shaft.
5) Fill up boot inside with specified grease.
6) Place new wheel side boot big band (3) and small band (4) onto boot putting band outer end (1) against forward rotation (2) as shown in figure.

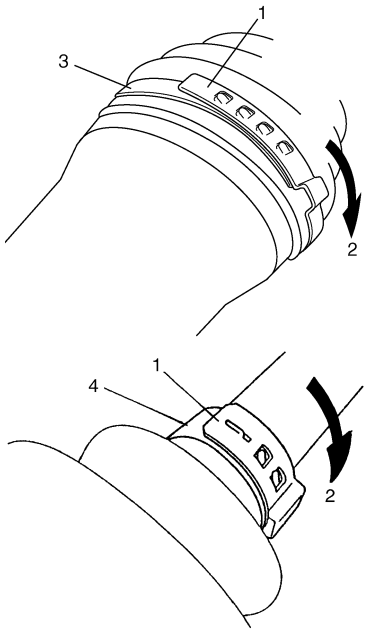

I4RS0A310009-01

7) Fasten boot bands (1) securely using special tool as shown in figure.

⚠ CAUTION

Do not squeeze or distort boot when fastening it with bands.
Distorted boot caused by squeezing air may reduce its durability.

Distance "a"
: 2.6 ± 1.4 mm (0.102 ± 0.055 in.)

Special tool
(A): 09943–57010

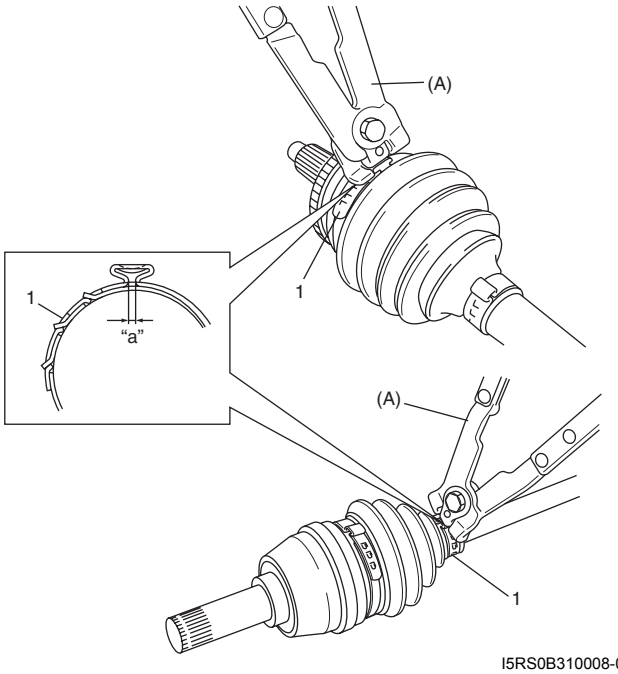

I5RS0B310008-01

8) Install damper (1) to specified position on drive shaft, if equipped.

Drive shaft damper installing position
“a”: 354 mm (13.9 in.) (right side)
“a”: 252 mm (9.9 in.) (left side)

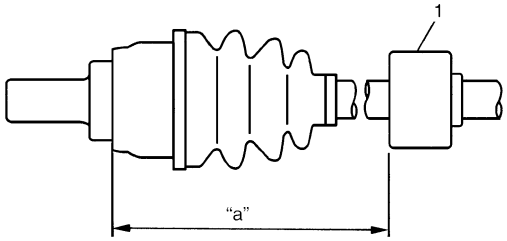

I4RS0B310002-01

9) Set new differential side (or center shaft side) small band and new differential side (or center shaft side) boot (1) on shaft temporarily, and then apply grease to tripod joint (2). Use specified grease in tube included in spare parts.

10) Install tripod joint spider (3) on shaft using special tool with hammer, directing its chamfered spline toward wheel side, and then fasten it with new snap ring (4) using snap ring pliers (5).

Special tool
(A): 09925–98221

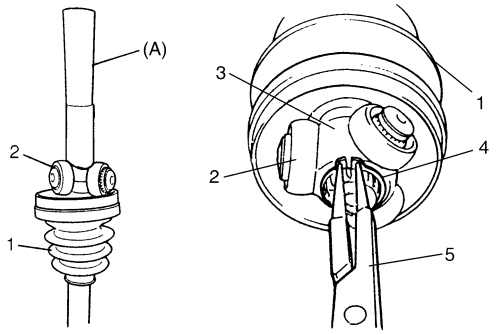

I7RW01311004-01

11) Apply grease (including in spare parts) to inside of tripod joint housing (1), joint it with tripod joint.

Grease color
“A”: Dark gray

Amount
“A”: 70 – 90 g (2.5 – 3.2 oz)

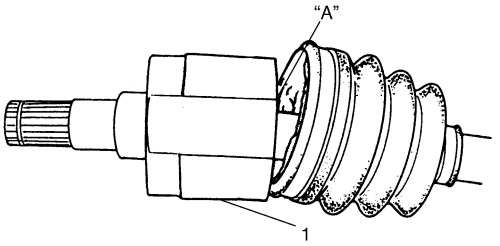

I4RS0B310003-01

12) Fit boot (1) to grooves of shaft and housing (2) adjust length to specification below.

13) Insert screw driver into boot and allow air to enter boot so that air pressure in boot becomes the same as atmospheric pressure.

Drive shaft boot fixing position (distance between housing end and small boot band)
Left side drive shaft “a”: 153.9 mm (6.06 in.)
Right side drive shaft “b”: 178 mm (7.01 in.)

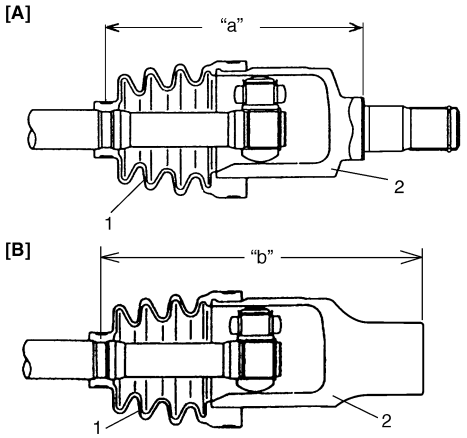

I4RS0B310004-01

[A]:	Drive shaft inserted into differential side
[B]:	Drive shaft inserted into center shaft side

⚠ CAUTION

- **Bend each boot band against forward rotation.**
- **Do not squeeze or distort boot when fastening it with bands. Distorted boot caused by squeezing air may reduce its durability.**

14) Place differential side (or center shaft side) boot new big band (3) and new small band (4) onto boot putting band outer end (1) against forward rotation (2) as shown in figure.

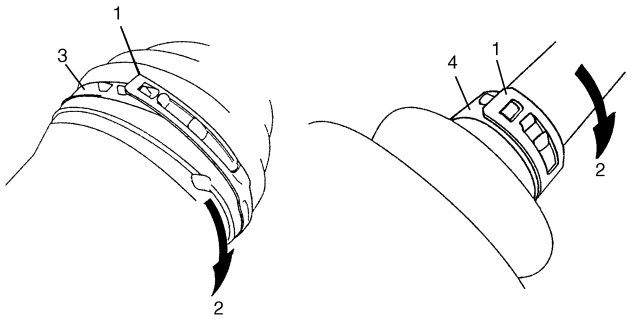

I4RS0B310007-01

15) Fasten differential side (or center shaft side) boot big band (1) and small band (5) by drawing hooks (2) with special tool and engage hooks (3) in slot and window (4).

Special tool
(A): 09943–57021

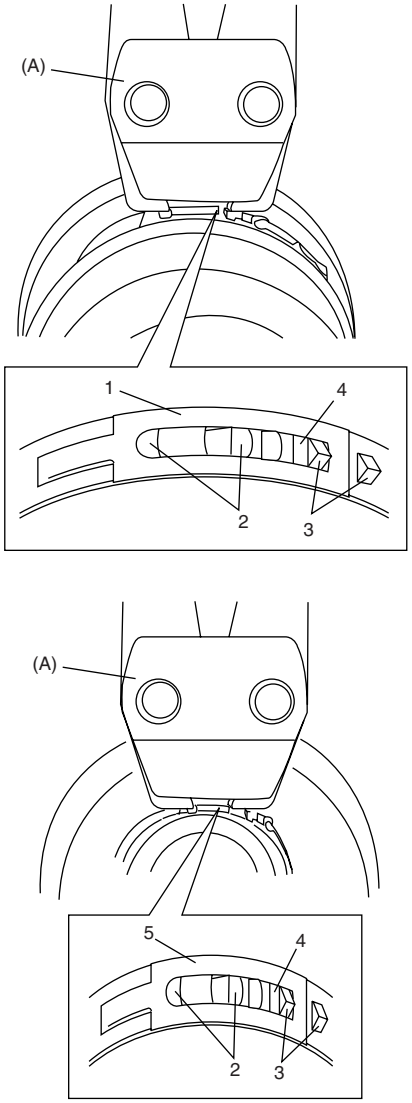

I4RS0B310008-02

Center Shaft and Center Bearing Support Disassembly and Reassembly (If Equipped)

S7RW0A3116005

Disassembly

1) Using hydraulic press (1), draw out center shaft (2) from center bearing.
2) Remove oil seals from center bearing support (3).

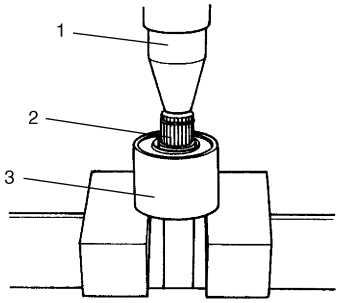

I3RM0A310012-01

3) Remove bearing support circlip (1) using snap ring pliers (2).

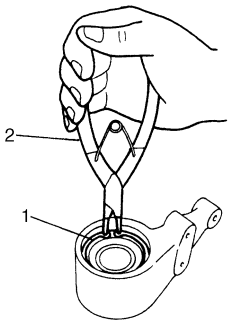

I7RW01311005-01

4) Remove center bearing from center bearing support.

Reassembly

Install center shaft by reversing removal procedure and noting the following points.

- When installing bearing support circlip (1), make sure that if fits in circlip groove in center bearing support (2) securely as shown.

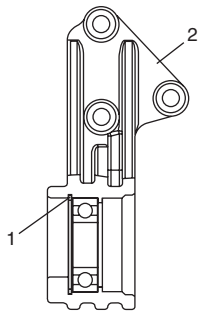

I5RW0A311006-01

- When installing left oil seal (1) and right oil seal (2) using special tool, use care so that oil seals in proper direction and position as shown in the figure.

  Special tool
  : 09925–15410

  Distance
  “a”: 0 – 1 mm (0 – 0.04 in.)
  “b”: 8 – 9 mm (0.13 – 0.35 in.)

- Be sure to apply grease to oil seal lip and bearing side space indicated in the figure.

  “A”: Grease 99000–25011 (SUZUKI Super Grease A)

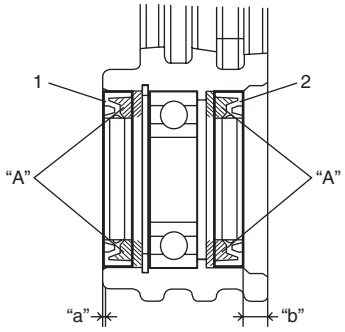

I5RW0A311007-01

- Press-fit center shaft (1) from left oil seal (2) side.

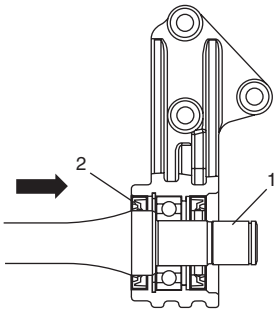

I5RW0A311008-01

Specifications

Tightening Torque Specifications

S7RW0A3117001

Fastening part	Tightening torque			Note
	N·m	kgf-m	lb-ft	
Brake hose mounting bolt	25	2.5	18.0	☞

NOTE

The specified tightening torque is also described in the following.
“Front Drive Shaft Assembly Components Location: Front”

Reference:
For the tightening torque of fastener not specified in this section, refer to “Fasteners Information in Section 0A”.

Special Tools and Equipment

Recommended Service Material

S7RW0A3118001

Material	SUZUKI recommended product or Specification		Note
Grease	SUZUKI Super Grease A	P/No.: 99000–25011	☞

NOTE

Required service material is also described in the following.
“Front Drive Shaft Components: Front”

Special Tool

S7RW0A3118002

09913–84510 Bearing installer ☞ 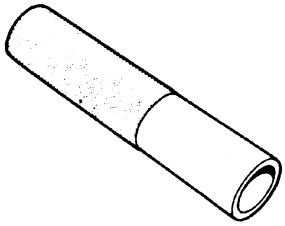	09925–15410 Oil seal installer ☞ 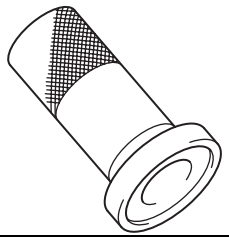
09925–98221 Bearing installer ☞ 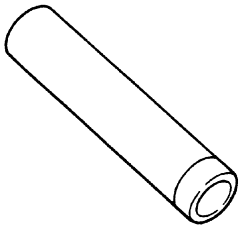	09943–57010 Band compressor ☞ / ☞ / ☞ 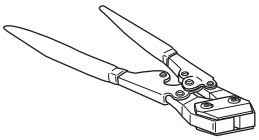
09943–57021 Pliers, Low-Profile Clamp ☞ / ☞ 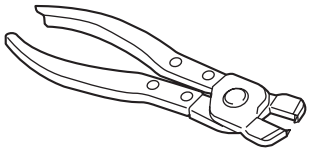	

Rear

General Description

Rear Drive Shaft Construction

S7RW0A3121001

Refer to “Front Drive Shaft Construction: Front”.

Repair Instructions

Rear Drive Shaft Components

S7RW0A3126001

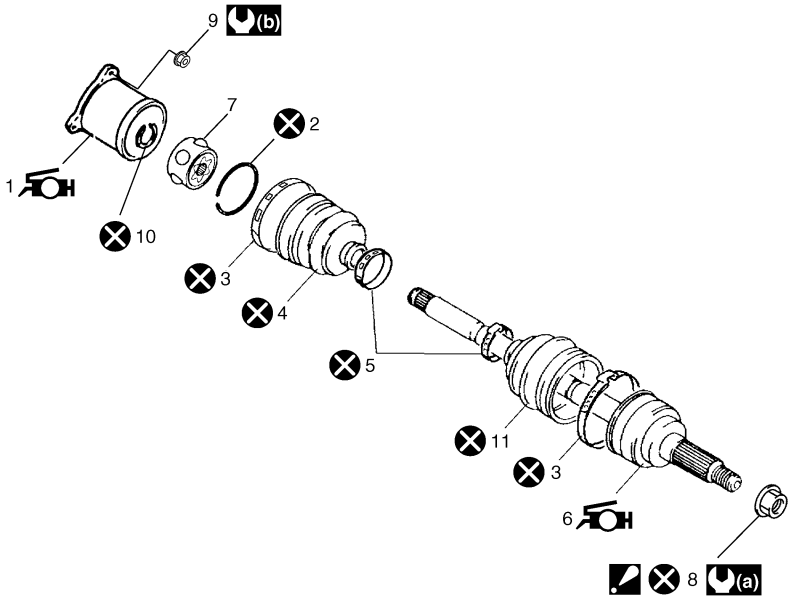

I5RW0A312001-01

1. Differential side joint (Constant velocity DOJ joint) : Apply dark gray grease included in spare part to joint.	6. Wheel side joint (Constant velocity ball joint) : Apply black grease included in spare part to joint.	11. Boot (wheel side)
2. Snap ring	7. Cage	(a) : 175 N·m (17.5 kgf-m, 126.5 lb-ft)
3. Boot band (Large)	8. Drive shaft nut : After tightening nut, caulk nut securely.	(b) : 80 N·m (8.0 kgf-m, 58.0 lb-ft)
4. Boot (Differential side)	9. Rear drive shaft flange nut	: Do not reuse.
5. Boot band (Small)	10. Circrip	

Rear Drive Shaft Assembly Removal and Installation

S7RW0A3126002

Removal

1) Hoist vehicle and remove rear wheel.
2) Undo caulking of drive shaft nut (1) and then remove drive shaft nut with pull up parking brake lever.

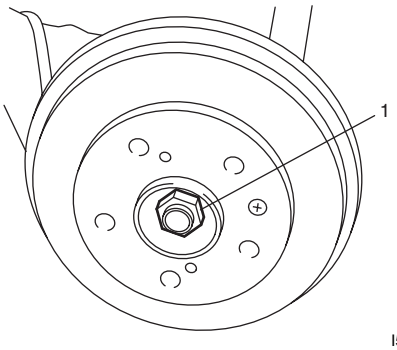

I5RW0A230023-01

3) Remove rear drive shaft flange nuts (1), and then remove rear drive shaft.

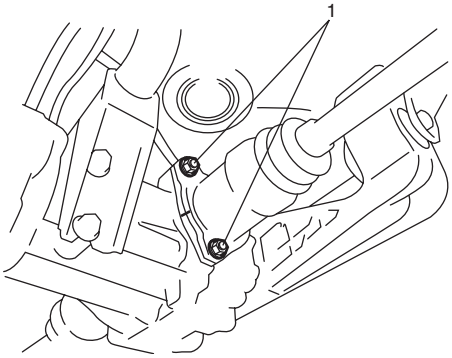

I5RW0A312006-02

Installation

Install drive shaft assembly by reversing removal procedure and noting the following points.

⚠ CAUTION

- **Protect boots from any damage, preventing them from unnecessary contact while installing drive shaft.**
- **Do not hit joint boot with hammer. Inserting joint only by hands is allowed.**

- Tighten each nuts to specified torque referring to “Rear Drive Shaft Components: Rear”.

Rear Drive Shaft Disassembly and Reassembly

S7RW0A3126003

Disassembly

Refer to “Front Drive Shaft Disassembly and Reassembly: Front” note the following point which is different from the front drive shaft is described.

- Remove differential side boot big band and small band as follows.
  - For boot big band (and small band) without joint [A]: Remove boot big band (and small band) by tapping boot and band with plastic hammer. If it is hard to remove boot big band (and small band), cut it using a nipper or an iron saw with care not to damage joint housing.
  - For boot big band (and small band) with joint [B]: Draw hooks of boot big band (and small band) together and remove band.

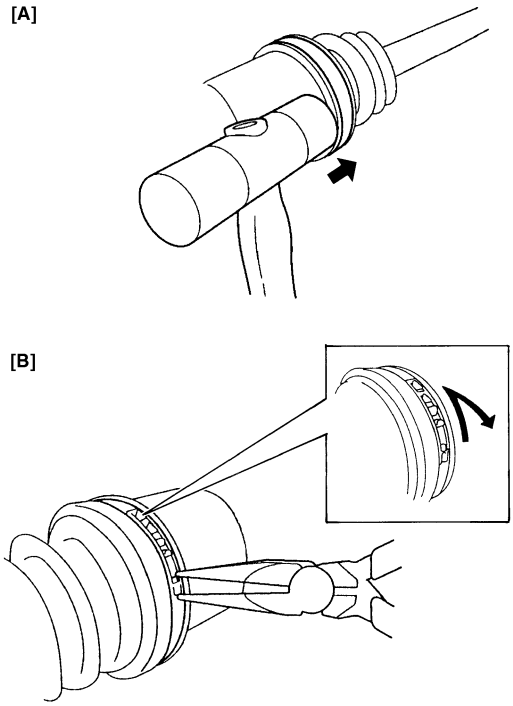

I5RW0A312003-01

Reassembly

Refer to “Front Drive Shaft Disassembly and Reassembly: Front” note the following points which is different from the front drive shaft is described.

- Apply grease to each joint.

  Grease color
  Wheel side: Black
  Differential side: Dark gray

  Amount
  Wheel side: 50 – 70 g (1.8 – 2.5 oz)
  Differential side: 70 – 90 g (2.5 – 3.2 oz)

- Drive in the cage (1) by using special tool.

  Special tool
  (A): 09913–84510

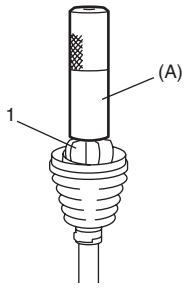

I5RS0B310009-01

- Fit differential side boot as follows.
  – Fit boot (1) to grooves of shaft and housing (2) adjust length to specification below.
  – Insert screw driver into boot and allow air to enter boot so that air pressure in boot becomes the same as atmospheric pressure.

  Drive shaft boot fixing position (distance between housing end and small boot band center)
  Left side and right side drive shafts “a”: 142.5 mm (5.61 in.)

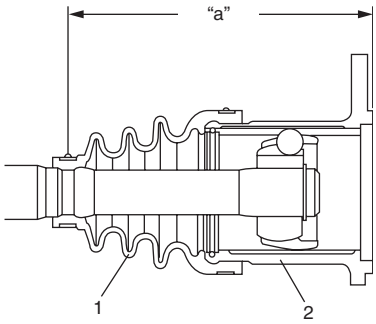

I5RW0A312007-01

- Fasten differential side boot band as follows.

  ⚠ **CAUTION**

  - **Bend each boot band against forward rotation.**
  - **Do not squeeze or distort boot when fastening it with bands. Distorted boot caused by squeezing air may reduce its durability.**

  – Place differential side boot new big band (3) and new small band onto boot putting band outer end (1) against forward rotation (2) as shown in figure.

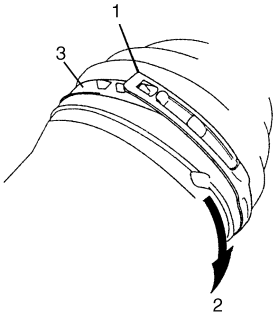

I5RW0A312004-01

  – Fasten differential side boot new big band (1) and new small band by drawing hooks (2) with special tool and engage hooks (3) in slot and window (4).

  Special tool
  (A): 09943–57021

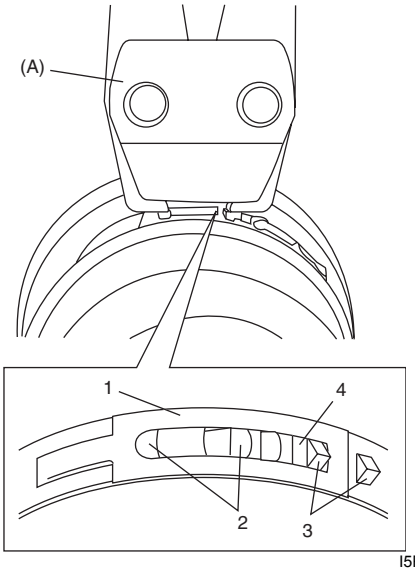

I5RW0A312005-01

Specifications

Tightening Torque Specifications

S7RW0A3127001

NOTE

The specified tightening torque is also described in the following.
“Rear Drive Shaft Components: Rear”

Reference:
For the tightening torque of fastener not specified in this section, refer to “Fasteners Information in Section 0A”.

Special Tools and Equipment

Recommended Service Material

S7RW0A3128001

NOTE

Required service material is also described in the following.
“Rear Drive Shaft Components: Rear”

Special Tool

S7RW0A3128002

09913–84510 Bearing installer ☞ 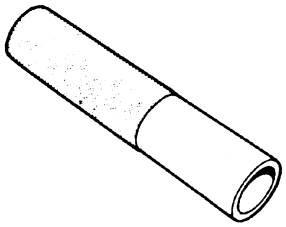	09943–57021 Pliers, Low-Profile Clamp ☞ 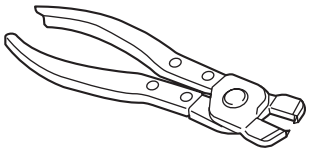

Differential

Precautions

Precaution for Rear Differential Oil Leakage

S7RW0A3200001

Whenever vehicle is hoisted for any other service work than oil change, also be sure to check for oil leakage.

Precautions in Diagnosing Trouble

S7RW0A3200002

- Do not disconnect the following parts before confirming diagnostic information (DTC, etc.) stored in 4WD control module memory. These actions will erase memorized information in 4WD control module memory.
  - Disconnection of coupler from 4WD control module
  - Disconnection of battery cable from battery
  - Disconnection of ground wire harness of 4WD control module
  - Disconnect main fuse from fuse box
- Diagnostic information stored in 4WD control module memory can be cleared as well as checked by using SUZUKI scan tool. Before using scan tool, read its Operator's (Instruction) Manual carefully to have good understanding as to what functions are available and how to use it.
- Be sure to read "Precautions for Electrical Circuit Service:" before inspection and observe what is written there.

General Description

Rear Differential Description

S7RW0A3201001

The differential assembly uses a hypoid bevel pinion and gear.
The differential assembly is decisive in that the drive power is concentrated there. Therefore, use of genuine parts and specified torque is compulsory. Further, because of sliding tooth meshing with high pressure between hypoid bevel pinion and gear, it is mandatory to lubricate them by hypoid gear oil.

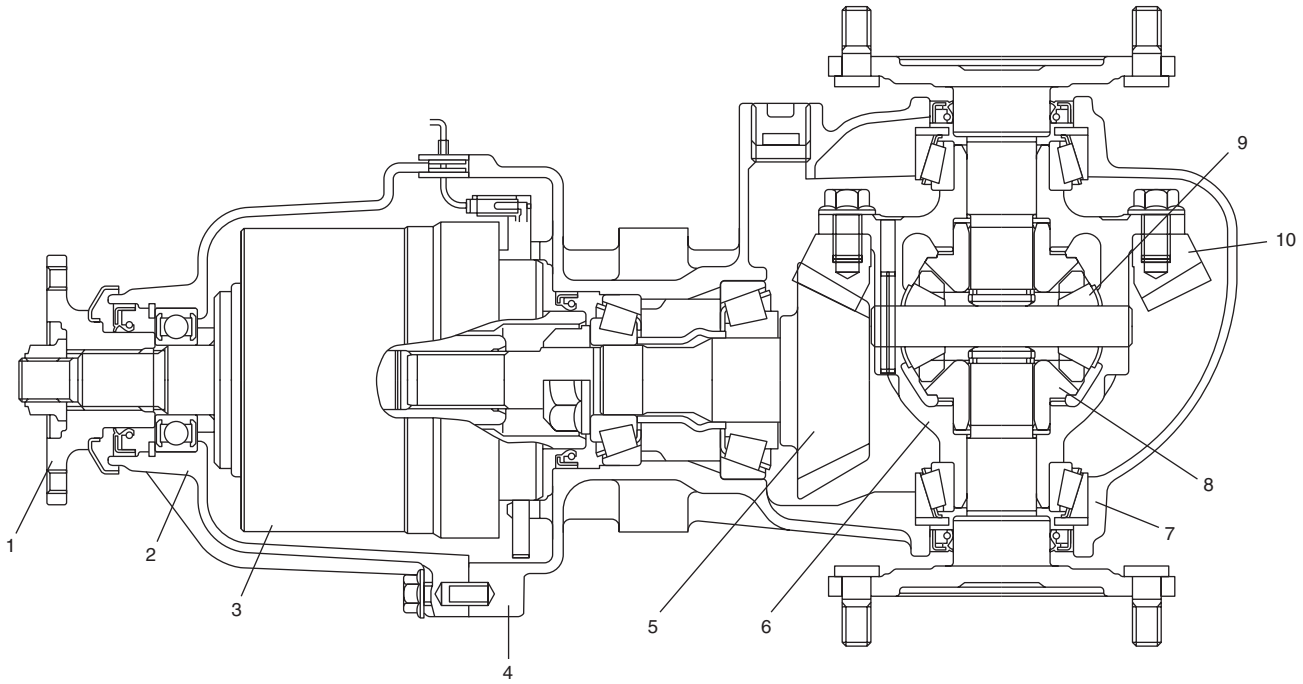

I5RW0A320001-01

1. Companion flange	5. Drive bevel pinion (hypoid gear)	9. Differential pinion
2. Coupling case	6. Differential case	10. Drive bevel gear (hypoid gear)
3. Coupling assembly	7. Differential cover	
4. Differential carrier	8. Differential side gear	

Coupling Description

S7RW0A3201002

Coupling is installed in the forward of Rear differential. The road situation and driving are judged with 4WD control module based on information from sensor and each control module, and the distribution of driving force of the front and rear wheel has been changed by controlling the current to coupling. Coupling air temperature sensor is installed in coupling case and measures the temperature in coupling.
4WD system has three driving positions (2WD, 4WD-auto, 4WD-lock). The position corresponding to the running situation can be selected by 2WD/4WD switch.

4WD Control System Description

S7RW0A3201004

4WD Shift Control

The 4WD control module operates the coupling assembly according to the 2WD/4WD switch operation to the selected position (2WD, 4WD-auto or 4WD-lock). Also, the 4WD control system has 4WD AUTO indicator and 4WD LOCK indicator in order to inform the 4WD control system condition.

Indicator Operation

The 4WD control module output operation signal of the 4WD AUTO indicator and the 4WD LOCK indicator. Indicators as follows in order to inform what state the 4WD control system is.

Operation		Condition
Indicator		
4WD AUTO indicator	OFF	• Ignition switch is OFF. • Vehicle is at “2WD” position or “4WD-lock” position.
	ON	• Within 2 seconds after ignition switch is turn ON (checking indicator operation). • Vehicle is at “4WD-auto” position. • 4WD control module detects DTC of 4WD control system.
	Blinking at intervals of 2 seconds continuously	• 4WD control module detects the rotation difference of front wheel and rear wheel and/or temperature of transfer more than specified temperature.
4WD LOCK indicator	OFF	• Ignition switch is OFF. • Vehicle is at “2WD” position or “4WD-auto” position.
	ON	• Within 2 seconds after ignition switch is turn ON (checking indicator operation). • Vehicle is at “4WD-lock” position. • 4WD control module detects DTC of 4WD control system.

Function of 4WD Control System Component

S7RW0A3201005

Part Name	Function
2WD/4WD switch	Output ON and OFF signal of 2WD/4WD switch to 4WD control module.
4WD AUTO indicator	Indicates vehicle is at 4WD-auto position or not.
4WD LOCK indicator	Indicates vehicle is at 4WD-lock position or not.
4WD control module	• Controlled of current to coupling assembly and vehicle switching to each position. • Diagnosis 4WD control system components. • Output operation signal of indicator to BCM.
Coupling assembly	The driving force of corresponding to the signal from 4WD control module transmitted to the rear wheel.

Input / Output Signal Table of 4WD Control Module

S7RW0A3201008

4WD control module outputs the following signals to coupling assembly, indicators, according to the 2WD/4WD switch operation.

		Output signal (to each component parts)		
		Coupling assembly	4WD AUTO indicator	4WD LOCK indicator
Input signal	2WD/4WD switch	○	○	○
	Coupling air temperature sensor		○	
	ECM	○		
	ABS / ESP® control module	○	○	○

On-Board Diagnostic System Description

S7RW0A3201009

For 4WD control system, 4WD control module has the following functions.

- When ignition switch is turned ON with engine at stop, 4WD AUTO indicator (1) and 4WD LOCK indicator (2) turn on at the same time for 2 seconds in order to check operation of these indicators.
- When 4WD control module detects any malfunction in the following area, 4WD AUTO indicator (1) and 4WD LOCK indicator (2) flash continuously or turn on and 4WD control module comes into fail-safe mode. For details of fail safe mode, refer to “Fail-Safe Table”.
  - 2WD/4WD switch
  - Coupling air temperature sensor
  - Coupling assembly
- DTC can be checked by using SUZUKI scan tool (3) connected to DLC (4).
- When 4WD control module detects any malfunction, 4WD control module will switch off the current to coupling assembly and vehicle is changed to 2WD position.

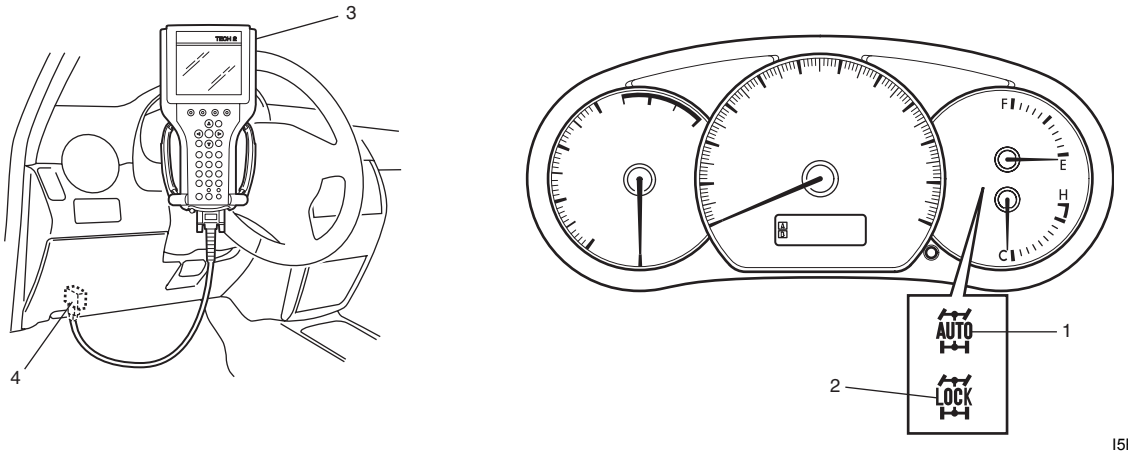

I5RW0A320004-01

DLC (Data Link Connector)

Refer to “Data Link Connector (DLC)” under “On-Board Diagnostic System Description in Section 1A”.

CAN Communication System Description

S7RW0A3201010

Refer to “CAN Communication System Description in Section 1A” for CAN communication system description.
When 4WD control module receive the signal of abnormal as following information, vehicle is not changed to 4WD-auto and 4WD-lock position.

4WD Control Module Transmission Data

				ECM	Combination Meter	ESP® hydraulic unit / control module (if equipped)
4WD control module	Transmit	DATA	4WD mode status	○		
			4WD auto mode indication status		○	
			4WD lock mode indication status		○	
			4WD diagnostic trouble codes		○	
			4WD clutch control request impossibility			○
			4WD clutch engagement percent			○

I7RW01320013-01

4WD Control Module Reception Data

				ECM	ABS hydraulic unit /control module (if equipped)	ESP® hydraulic unit /control module (if equipped)
4WD control module	Receive	DATA	Accelerator position	○		
			Engine speed	○		
			Brake pedal switch signal	○		
			Engine type signal	○		
			Engine torque signal	○		
			Wheel speed signal (front right)		○	○
			Wheel speed signal (front left)		○	○
			Wheel speed signal (rear right)		○	○
			Wheel speed signal (rear lef)		○	○
			ABS active		○	○
			ESP® status signal			○
			Clutch control request for 4WD active			○
			Clutch control request percent			○

I7RW01320002-03

Schematic and Routing Diagram

4WD Control System Wiring Circuit Diagram

S7RW0A3202007

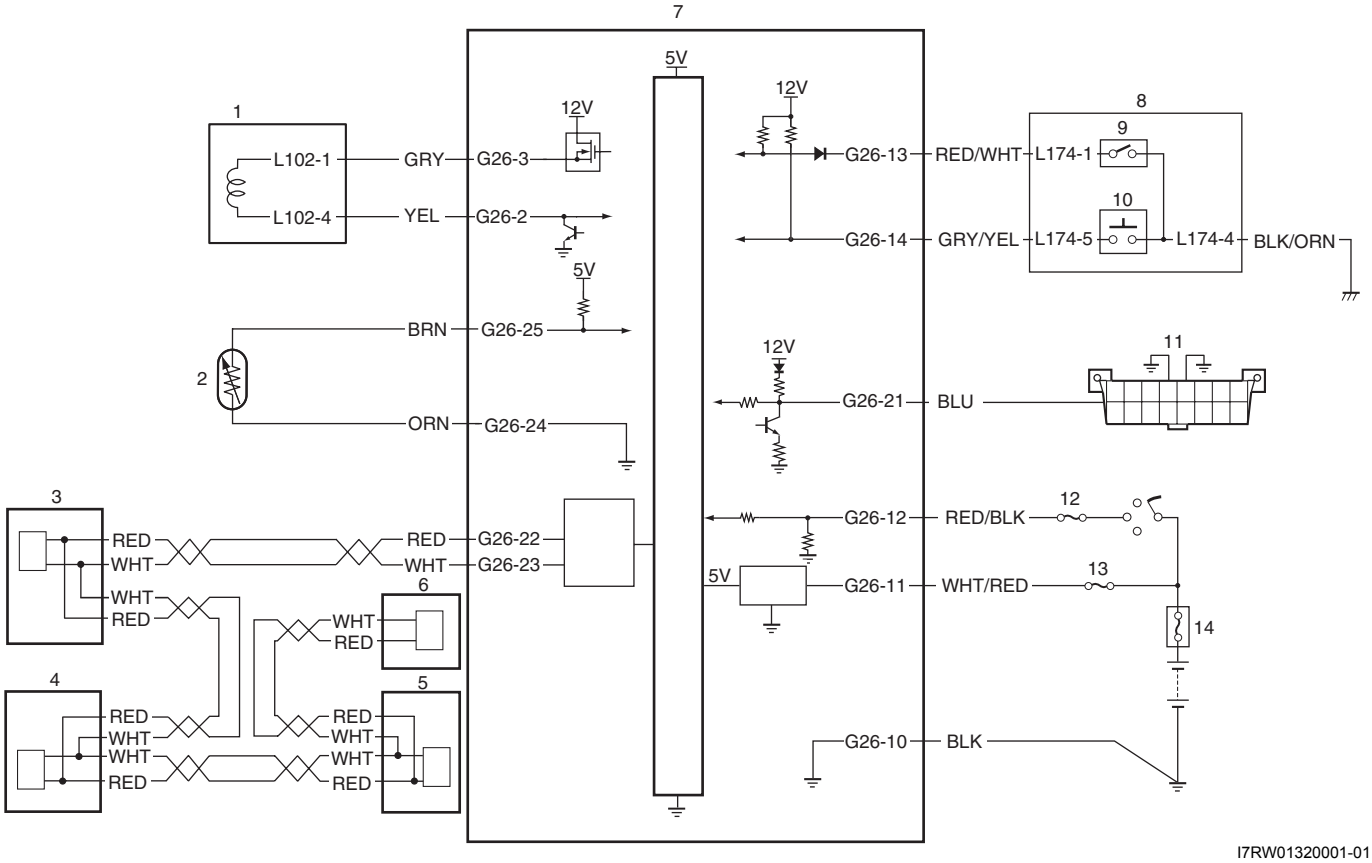

I7RW01320001-01

1. Coupling assembly	6. ECM	11. Data link connector (DLC)
2. Coupling air temperature sensor	7. 4WD control module	12. “IG COIL” fuse
3. Combination meter	8. 2WD/4WD switch	13. “4WD” fuse
4. BCM	9. “4WD” switch	14. Main fuse box
5. ABS / ESP® control module	10. “4WD lock” switch	

Terminal Arrangement of 4WD Control Module

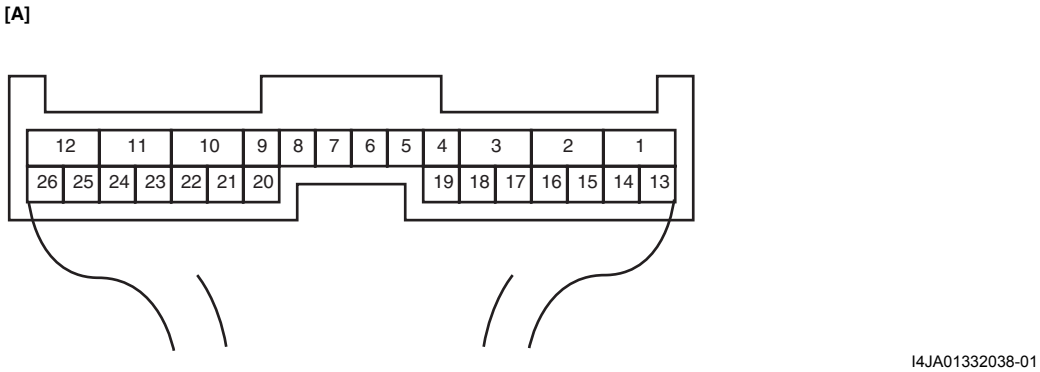

[A]: Connector “G26” viewed from harness side

Terminal	Circuit	Terminal	Circuit
G26-2	Coupling assembly (power)	G26-14	“4WD lock” switch
G26-3	Coupling assembly (ground)	G26-21	Data link connector (DLC)
G26-10	Ground	G26-22	CAN communication line (high)
G26-11	Power source for internal memory	G26-23	CAN communication line (low)
G26-12	Power source	G26-24	Coupling air temperature sensor (ground)
G26-13	“4WD” switch	G26-25	Coupling air temperature sensor (power)

Component Location

4WD Control System Components Location

S7RW0A3203004

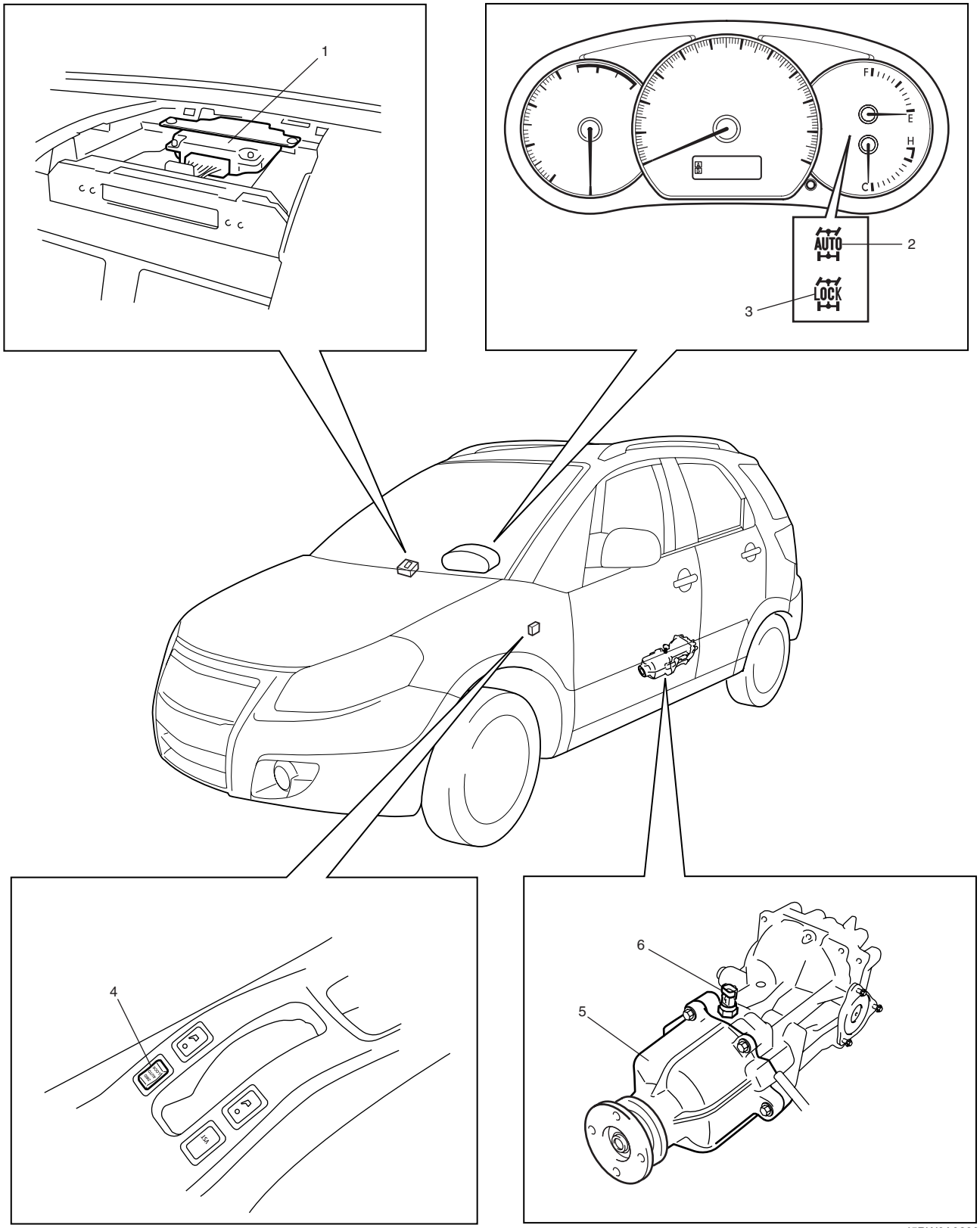

I5RW0A320002-04

1. 4WD control module	3. 4WD LOCK indicator	5. Coupling assembly
2. 4WD AUTO indicator	4. 2WD/4WD switch	6. Coupling air temperature sensor

Diagnostic Information and Procedures

4WD Control System Check

S7RW0A3204001

Refer to the following items for the details of each step.

Step	Action	Yes	No
1	☞ **Customer complaint analysis** 1) Perform customer complaint analysis. *Was customer complaint analysis performed?*	Go to Step 2.	Perform customer complaint analysis.
2	☞ **DTC check, record and clearance** 1) Check for DTC. *Is there any DTC(s)?*	Print DTC or write them down and clear them by referring to “DTC Clearance”. Go to Step 3.	Go to Step 4.
3	☞ **Visual inspection** 1) Perform visual inspection. *Is there any faulty condition?*	Repair or replace malfunction part. Go to Step 11.	Go to Step 5.
4	☞ **Visual inspection** 1) Perform visual inspection. *Is there any faulty condition?*	Repair or replace malfunction part. Go to Step 11.	Go to Step 8.
5	☞ **Trouble symptom confirmation** 1) Select 2WD/4WD switch to “2WD”, “4WD-auto” and “4WD-lock” positions referring to “4WD Control System Operation Inspection”. 2) Confirm trouble symptom. *Is trouble symptom identified?*	Go to Step 6.	Go to Step 7.
6	☞ **Rechecking and record of DTC** 1) Recheck for DTC referring to “DTC Check”. *Is there any DTC(s)?*	Go to Step 9.	Go to Step 8.
7	☞ **Rechecking and record of DTC** 1) Recheck for DTC referring to “DTC Check”. *Is there any DTC(s)?*	Go to Step 9.	Go to Step 10.
8	☞ **4WD control symptom diagnosis** 1) Check and repair according to “4WD Control Symptom Diagnosis”. *Are check and repair complete?*	Go to Step 11.	Check and repair malfunction part(s). Go to Step 11.
9	☞ **Troubleshooting for DTC** 1) Check and repair according to applicable DTC flow. *Are check and repair complete?*	Go to Step 11.	Check and repair malfunction part(s). Go to Step 11.
10	☞ **Check for intermittent problems** 1) Check for intermittent problems referring to “Intermittent and Poor Connection Inspection in Section 00”. *Is there any faulty condition?*	Repair or replace malfunction part(s). Go to Step 11.	Go to Step 11.
11	☞ **Final confirmation test** 1) Clear DTC if any. 2) Perform final confirmation test. *Is there any problem symptom, DTC or abnormal condition?*	Go to Step 6.	END.

Detail of 4WD Control System Check

Step 1. Customer complaint analysis

Record details of the problem (failure, complaint) and how it occurred as described by the customer.
For this purpose, use of such a questionnaire form as shown in the following will facilitate collecting information to the point required for proper analysis and diagnosis.

Customer questionnaire (Example)

Customer's name:	Model:	VIN:	
Date of issue:	Date of Reg:	Date of problem:	Mileage:

Problem Symptoms	• 4WD position indicator abnormal: fails to turn on / fails to turn off / flashes • Abnormal noise while vehicle running: from coupling assembly other _____ • No changed to "2WD" position • No changed to "4WD-lock" position • No changed to "4WD-auto" position
Frequency of Occurrence	• Continuous / Intermittent (times a day, a month) / other _____
Conditions for Occurrence of Problem	• When starting: at initial start only / at every start / other _____ • Vehicle speed: while accelerating / while decelerating / at stop / while turning / while running at constant speed / other _____ • Road surface condition: Paved road / rough road / snow-covered road / other _____
Environmental Condition	• Wheather: fine / cloudy / rain / snow / other • Temperature: °F (°C)
Diagnostic Trouble Code	• First check: Normal code / malfunction code ( ) • Second check after test drive: Normal code / malfunction code ( )

I5RW0A320007-02

NOTE

The form is a standard sample. It should be modified according to conditions characteristic of each market.

Step 2. DTC check, record and clearance
First, referring to “DTC Check”, check DTC and pending DTC. If DTC exists, print or write down DTC and then clear malfunction DTC(s) by referring to “DTC Clearance”. Malfunction DTC indicates malfunction in the system but it is not possible to know from it whether the malfunction is occurring now or it occurred in the past and normal condition has been restored. In order to know that, check symptom in question according to Step 5 and then recheck DTC according to Step 6.
Diagnosing a trouble based on the DTC in this step only or failure to clear the DTC in this step may result in an faulty diagnosis, trouble diagnosis of a normal circuit or difficulty in troubleshooting which is otherwise unnecessary.

Step 3 and 4. Visual inspection
As a preliminary step, be sure to perform visual check of the items that support proper function of the 4WD control system referring to “Visual Inspection”.

Step 5. Trouble symptom confirmation
Check trouble symptoms based on information obtained in “Step 1. Customer complaint analysis: ” and “Step 2. DTC check, record and clearance: ”.
Also, reconfirm DTC according to “DTC Confirmation Procedure” described in each DTC flow.

Step 6 and 7. Rechecking and record of DTC
Refer to “DTC Check” for checking procedure.

Step 8. 4WD control symptom diagnosis
Check the parts of the system suspected as a possible cause referring to “4WD Control Symptom Diagnosis”.

Step 9. Troubleshooting for DTC
Based on the DTC indicated in Step 6 / 7 and referring to “applicable DTC flow”, locate the cause of the trouble, namely in a sensor, switch, wire harness, connector, coupling assembly, 4WD control module or other part and repair or replace faulty parts.

Step 10. Check for intermittent problem
Check parts where an intermittent trouble is easy to occur (e.g. wire harness, connector, etc.), referring to “Intermittent and Poor Connection Inspection in Section 00” and related circuit of DTC recorded in Step 2.

Step 11. Final confirmation test
Confirm that the problem symptom has gone and the vehicle is free from any abnormal conditions. If what has been repaired is related to the malfunction DTC, clear the DTC once and check to ensure that no malfunction DTC is indicated.

4WD Position Indicator Operation Check

S7RW0A3204002

1) Turn ignition switch to OFF position.
2) Check that 4WD position indicators turn on for about 2 seconds and then turns off.
   If any faulty condition is found, proceed to “4WD Position Indicator Does Not Come ON at Ignition Switch ON but Engine Stops” or “4WD Position Indicator Remains ON Steady at Ignition Switch ON”.

4WD Control System Operation Inspection

S7RW0A3204003

NOTE

- **It automatically changes into “4WD-auto” position, when the vehicle speed becomes specified speed or more at “4WD-lock” position. It is “4WD-auto” position until switch will be selected to “4WD-lock” position at next time.**
- **When ABS operates while changed of each position, it is discontinued of change. End of the ABS operation, and then returned to the position of before.**

1) Inspect switch operation from “4WD-auto” to “2WD” as follows.
   a) Start engine.
   b) Push 2WD/4WD switch to “2WD” position.
   c) Check that 4WD AUTO indicator and 4WD LOCK indicator not come ON.
2) Inspect switch operation from “2WD” to “4WD-auto” as follows.
   a) Start engine.
   b) Push 2WD/4WD switch to “AUTO” position.
   c) Check that 4WD AUTO indicator comes ON steady and 4WD LOCK indicator not come ON.
3) Inspect switch operation from “4WD-auto” to “4WD-lock” as follows.
   a) Start engine.
   b) Push 2WD/4WD switch to “LOCK” position, and keep it for 3 seconds or more.
   c) Check that 4WD AUTO indicator not come ON and 4WD LOCK indicator comes ON steady.
4) Inspect switch operation from “4WD-lock” to “4WD-auto” as follows.
   a) Start engine.
   b) Push 2WD/4WD switch to “AUTO” position.
   c) Check that 4WD AUTO indicator comes ON steady and 4WD LOCK indicator not come ON.

Visual Inspection

S7RW0A3204004

Check the following parts and systems visually.

Inspection Item	Referring
• Rear differential oil ---- level, leakage	"Rear Differential Oil Change"
• Transfer gear oil ---- level, leakage	"Transfer Oil Change in Section 3C"
• Manual transmission oil ---- level, leakage	"Manual Transaxle Oil Change in Section 5B"
• Rear differential mounting(s) ---- wear and looseness	
• Fuses ---- burning	
• Battery ---- fluid level, corrosion of terminal	"Battery Inspection in Section 1J"
• Connectors of electric wire harness ---- disconnection, friction	"Intermittent and Poor Connection Inspection in Section 00"
• Other parts that can be checked visually	

DTC Check

S7RW0A3204005

1) Turn ignition switch to OFF position.
2) Connect SUZUKI scan tool to data link connector (DLC) (1) located on underside of instrument panel.

   Special tool
   (A): SUZUKI scan tool

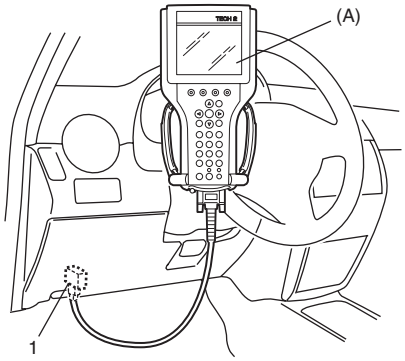

I5RW0A320008-01

3) Turn ignition switch to ON position.
4) Read DTC according to instructions displayed on SUZUKI scan tool and print it or write it down. Refer to SUZUKI scan tool operator's manual for further details.
   If communication between SUZUKI scan tool and 4WD control module is not possible, check if SUZUKI scan tool is communicable by connecting it to 4WD control module in another vehicle. If communication is possible in this case, SUZUKI scan tool is in good condition. Then check data link connector and serial data line (circuit) in the vehicle with which communication was not possible.
5) After completing the check, turn ignition switch OFF and disconnect SUZUKI scan tool from data link connector (DLC).

DTC Clearance

S7RW0A3204006

1) Turn ignition switch to OFF position.
2) Connect SUZUKI scan tool to data link connector (DLC) (1) located on underside of instrument panel.

   Special tool
   (A): SUZUKI scan tool

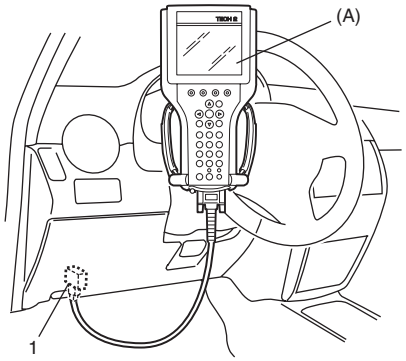

I5RW0A320008-01

3) Turn ignition switch to ON position.
4) Erase DTC according to instructions displayed on SUZUKI scan tool. Refer to SUZUKI scan tool operator's manual for further details.
5) After completing clearance, turn ignition switch OFF and disconnect SUZUKI scan tool from data link connector (DLC).
6) Perform "DTC Check" and confirm that NO CODES is displayed.

NOTE

DTC stored in 4WD control module memory are also cleared in the following cases. Be careful not to clear them before keeping their record.

- **When power to 4WD control module is cut off (by disconnecting battery cable, removing fuse or disconnecting 4WD control module connectors).**
- **When the same malfunction (DTC) is not detected again during 40 engine warm-up cycles.**

DTC Table

S7RW0A3204007

DTC No.	Detecting item	Detecting condition (DTC will set when detecting)	4WD position Indicator
☞ C1240	4WD control module power supply circuit malfunction	Battery voltage is lower than lower limit voltage for 4WD control module diagnosis.	○
☞ C1243	Internal circuit malfunction of 4WD control module	Internal power supply malfunction of 4WD control module	○
☞ C1250	Coupling air temperature sensor open	Sensor output voltage too high	○
☞ C1251	Coupling air temperature sensor short	Sensor output voltage too low	○
☞ C1252	Coupling assembly open	2WD/4WD switch is changed of 4WD lock position, and then vehicle is not changed for more than 5 seconds.	○
☞ C1253	Coupling assembly short	2WD/4WD switch is changed of 4WD lock position, and then vehicle is not changed for more than 5 seconds.	○
☞ C1254	2WD/4WD switch malfunction	Different switch combination from specification is detected more than 5 seconds.	○
☞ U0073	Control module communication bus off	Transmitting and receiving error of 4WD control module for specified time continuously	○
☞ U0100	Lost communication with ECM	Receiving error of 4WD control module from ECM for specified time continuously	○
☞ U0121	Lost communication with ABS / ESP® control module	Receiving error of 4WD control module from ABS / ESP® control module for specified time continuously	○
☞ U0155	Lost communication with instrument panel cluster control module	Receiving error of 4WD control module from combination meter for specified time continuously	○

NOTE

“O” in transfer position indicator column of the above table means indicator lights up when DTC is detected.

Fail-Safe Table

S7RW0A3204008

This function is provided by the safe mechanism that assures safe driveability even when the coupling assembly, switch, sensor or its circuit fails. The following table shows the fail safe function for each fail condition of sensor, coupling assembly, switch, 4WD control module or its circuit.

DTC No.	Trouble Area	Fail-Safe Operation
☞C1240	4WD control module power supply circuit malfunction	4WD control module controls the current and fixed the vehicle to 2WD position.
☞C1243	Internal circuit malfunction of 4WD control module	
☞C1250	Coupling air temperature sensor open	
☞C1251	Coupling air temperature sensor short	
☞C1252	Coupling assembly open	
☞C1253	Coupling assembly short	
☞C1254	2WD/4WD switch malfunction	
☞U0073	Control module communication bus off	
☞U0100	Lost communication with ECM	
☞U0121	Lost communication with ABS / ESP® control module	
☞U0155	Lost communication with instrument panel cluster control module	

Scan Tool Data

S7RW0A3204009

Scan tool data	Vehicle condition		Normal condition / reference values
☞ Accel pedal Pos	Ignition switch ON after warmed up engine	Accelerator pedal released	0 – 5%
		Accelerator pedal depressed fully	90 – 100%
☞ Engine speed	At engine idle speed		Engine idle speed is display
☞ 4WD mode	2WD/4WD switch selected to 2WD position		2WD
	2WD/4WD switch selected to AUTO position		AUTO
	2WD/4WD switch selected to LOCK position		LOCK
	ABS operating		ABS mode
	Ignition switch ON and engine stop		Relay off
	Stability control operating		Yaw cont
	ESP® operating		ESP® mode
☞ 4WD current	Engine running		0 – 200 mA
☞ Battery voltage	At engine idle speed		10 – 14 V
☞ Coupling temp	Engine running		–40 °C – 100 °C (–40 °F – 212 °F)
☞ Wheel speed (F)	Vehicle stop		0 km/h, 0 MPH
☞ Wheel speed (R)	Vehicle stop		0 km/h, 0 MPH
☞ F-R Wheel speed Diff	Vehicle stop		0 rpm
☞ 4WD duty	Ignition switch ON and 2WD/4WD switch selected to 2WD position		0%

Scan Tool Data Definitions

Accel pedal Pos (Accelerator pedal position) (%)
Accelerator pedal opening ratio detected by signal on CAN communication line fed from ECM.

Engine Speed (RPM)
This parameter indicates engine revolution calculated by 4WD control module.

4WD mode (2WD / AUTO / LOCK / ABS mode / Yaw cont / ESP® req)
This parameter indicates 4WD mode according to 2WD/4WD switch signal status detected by 4WD control module.

4WD current (A)
This parameter indicates input current of coupling assembly.

Battery voltage (V)
This parameter indicates battery voltage detected by 4WD control module.

Coupling temp (°C, °F)
Coupling temperature detected by coupling air temperature sensor installed in coupling assembly.

Wheel speed (F), Wheel speed (R) (km/h, mph)
Wheel speed is an ABS / ESP® control module internal parameter. It is computed by reference pulses from the wheel speed sensor.

F-R Wheel speed diff (Front-rear wheel speed differential) (rpm)
This parameter indicates rotation difference between front wheel and rear wheel detected by 4WD control module.

4WD duty (%)
This parameter indicates operation rate of coupling assembly.

Rear Differential Symptom Diagnosis

S7RW0A3204010

Condition	Possible cause	Correction / Reference Item
Gear noise	Deteriorated or water mixed lubricant	*Repair and replenish referring to “Rear Differential Oil Change”.*
	Inadequate or insufficient lubricant	*Repair and replenish referring to “Rear Differential Oil Change”.*
	Maladjusted backlash between drive bevel pinion and gear	*Adjust as prescribed referring to “Rear Differential Disassembly and Reassembly”.*
	Improper tooth contact in the mesh between drive bevel pinion and gear	*Adjust or replace referring to “Rear Differential Disassembly and Reassembly”.*
	Loose drive bevel gear securing bolts	*Replace or retighten referring to “Rear Differential Disassembly and Reassembly”.*
	Damaged differential gear(s) or differential pinion(s)	*Replace referring to “Rear Differential Inspection”.*
Bearing noise	(Constant noise) Deteriorated or water mixed lubricant	*Repair and replenish referring to “Rear Differential Oil Change”.*
	(Constant noise) Inadequate or insufficient lubricant	*Repair and replenish referring to “Rear Differential Oil Change”.*
	(Noise while coasting) Damaged bearing(s) of drive bevel pinion	*Replace referring to “Rear Differential Inspection”.*
	(Noise while turning) Damaged differential side bearing(s) or axle bearing(s)	*Replace referring to “Rear Differential Inspection”.*
Oil leakage	Clogged breather plug	*Clean.*
	Worn or damaged oil seal	*Replace.*
	Excessive oil	*Adjust oil level referring to “Rear Differential Oil Change”.*
	Loose differential carrier bolts	*Replace or retighten.*

4WD Control Symptom Diagnosis

S7RW0A3204011

Diagnose 4WD system after performing the following inspections.

- Perform 4WD control system check referring to “4WD Control System Check”.

Condition	Possible cause	Correction / Reference Item
4WD system does not operate	2WD/4WD switch faulty	*Check switch referring to “2WD/4WD Switch Inspection”.*
	Coupling air temperature sensor faulty	*Check coupling air temperature sensor referring to “Coupling Air Temperature Sensor Inspection”.*
	Coupling assembly faulty	*Check coupling assembly referring to “Coupling Assembly Inspection”.*
	Wiring or grounding faulty	*Repair as necessary.*
	4WD control module faulty	*Check 4WD control module referring to “Inspection of 4WD Control Module and Its Circuits”.*
	MAF sensor faulty	*Check MAF sensor and its circuit.*
	Accelerator pedal position (APP) sensor faulty	*Check accelerator pedal position (APP) sensor and its circuit.*
	CKP sensor faulty	*Check CKP sensor and its circuit.*
	Front and/or rear wheel speed sensor faulty	*Check front and/or rear wheel speed sensor and its circuit.*
	Steering angle sensor faulty	*Check steering angle sensor and its circuit.*
	ABS / ESP® control module faulty	*Check ABS / ESP® control module and its circuit.*
	ECM faulty	*Check ECM and its circuit.*
Noise	Damaged or worn bearing(s)	*Refer to “Rear Differential Inspection”.*

4WD Position Indicator Does Not Come ON at Ignition Switch ON but Engine Stops

S7RW0A3204012

Wiring Diagram

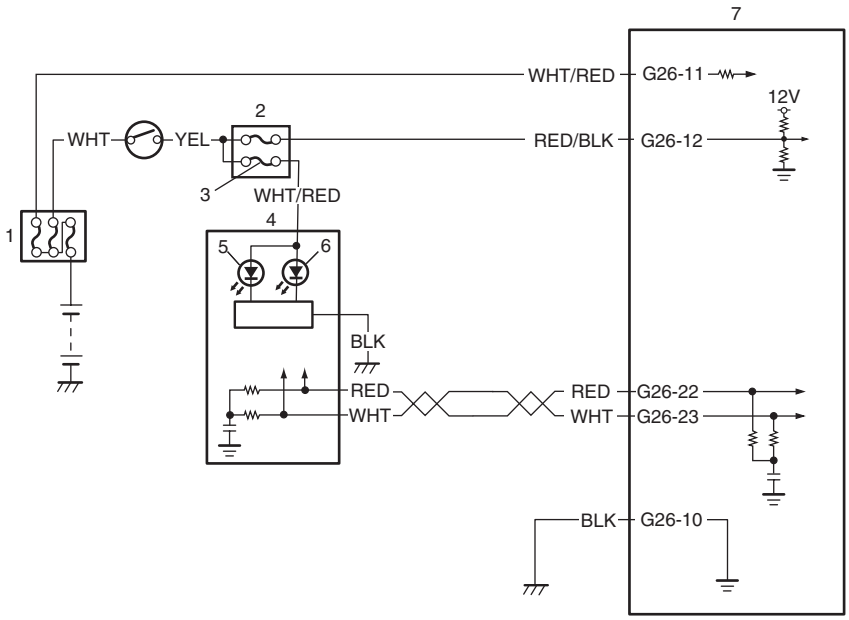

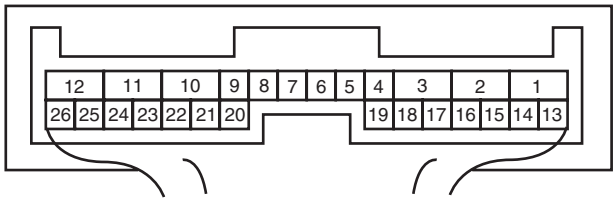

I7RW01320004-01

[A]: 4WD control module connector “G26” (viewed from harness side)	4. Combination meter
1. Main fuse box	5. 4WD AUTO indicator
2. Junction block assembly	6. 4WD LOCK indicator
3. “METER” fuse	7. 4WD control module

Circuit Description

4WD position indicator operates according to the signal from 4WD control module. If the 4WD control system is in good condition, 4WD position indicator light up for 2 seconds when ignition switch is turned to ON position, and then turned to OFF position. If an abnormality is detected in the system, 4WD position indicator remains lighting.

Troubleshooting

Step	Action	Yes	No
1	**4WD position indicator power supply check** 1) Turn ignition switch to ON position. *Do other indicators come ON?*	Go to Step 2.	Go to Step 3.
2	**Check DTC** 1) Connect scan tool to DLC with ignition switch OFF. 2) Turn ignition switch to ON position and check DTC. *Is there DTC(s) U0073, U0100, U0121 and/or U0155?*	Go to applicable DTC diag. flow.	Substitute a known-good combination meter and recheck. If 4WD position indicator still remains off, substitute a known-good 4WD control module and recheck.

Step	Action	Yes	No
3	**CAN communication circuit check** 1) Check CAN communication circuit between combination meter and 4WD control module referring to “DTC U0073: Control Module Communication Bus Off”. *Is CAN communication circuit in good condition?*	Go to Step 4.	Repair or replace.
4	**“METER” fuse check** 1) Turn ignition switch to OFF position. 2) Check for fuse blown to “METER” fuse in junction block assembly. *Is “METER” fuse in good condition?*	Go to Step 5.	Replace “METER” fuse and check for short.
5	**Combination meter power supply check** 1) Remove combination meter referring to “Combination Meter Removal and Installation in Section 9C”. 2) Check proper connection to “WHT/RED” and “BLK” wire terminal of combination meter connector. 3) If OK, then turn ignition switch to ON position and measure voltage between “WHT/RED” wire terminal of combination meter connector and vehicle body ground. *Is it 10 – 14 V?*	Go to Step 6.	“WHT/RED” wire is open circuit.
6	**Combination meter ground circuit check** 1) Turn ignition switch to OFF position. 2) Measure resistance between “BLK” wire terminal of combination meter connector and vehicle body ground. *Is resistance 1 Ω or less?*	Substitute a known-good combination meter and recheck. If 4WD position indicator still remains OFF, substitute a known-good 4WD control module and recheck.	“BLK” wire is open or high resistance circuit.

4WD Position Indicator Remains ON Steady at Ignition Switch ON

S7RW0A3204013

Wiring Diagram

Refer to “4WD Position Indicator Does Not Come ON at Ignition Switch ON but Engine Stops”.

Circuit Description

Transfer position indicator operates according to the signal from 4WD control module. If the 4WD control system is in good condition, 4WD position indicator light up for 2 seconds when ignition switch is turned to ON position, and then turned to OFF position. If an abnormality is detected in the system, 4WD position indicator remains lighting.

Troubleshooting

Step	Action	Yes	No
1	**Check DTC** 1) Check DTC referring to “DTC Check”. *Is there any DTC(s)?*	Perform DTC flow to repair and retry.	Go to Step 2.
2	**CAN communication circuit check** 1) Check CAN communication circuit between combination meter and 4WD control module referring to “DTC U0073: Control Module Communication Bus Off”. *Is CAN communication circuit in good condition?*	Substitute a known-good combination meter and recheck. If 4WD position indicator still remains off, substitute a known-good 4WD control module and recheck.	Repair or replace.

DTC C1240: 4WD Control Module Power Supply Circuit Malfunction

S7RW0A3204014

Wiring Diagram

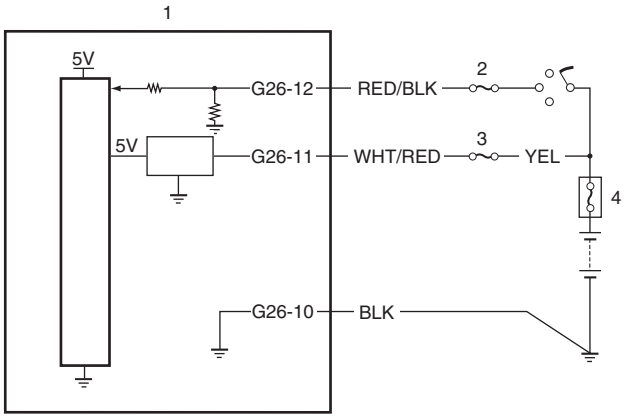

[A]

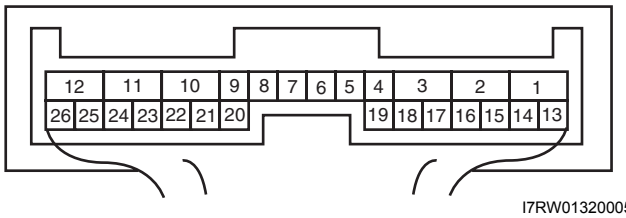

I7RW01320005-01

[A]: 4WD control module connector “G26” (viewed from harness side)	3. “4WD” fuse
1. 4WD control module	4. Main fuse box
2. “IG COIL” fuse	

DTC Detecting Condition and Trouble Area

DTC detecting condition	Trouble area
4WD control module power supply voltage is out of specification.	4WD control module power supply circuit

DTC Confirmation Procedure

1) Clear DTC using scan tool.
2) Turn ignition switch to ON position for 10 seconds.
3) Check DTC.

Troubleshooting

Step	Action	Yes	No
1	*Was “4WD control system check” performed?*	Go to Step 2.	Go to “4WD Control System Check”.
2	**4WD control module power circuit check** 1) Disconnect 4WD control module connector with ignition switch OFF. 2) Check for proper connection to “G26” terminal of 4WD control module connector. 3) If connection is OK, measure voltage between “G26-11” terminal of 4WD control module connector and vehicle body ground with ignition switch ON. *Is it 10 – 14 V?*	Poor “G26-11” connection or intermittent trouble. Check for intermittent referring to “Intermittent and Poor Connection Inspection in Section 00”. If wire and connections are OK, substitute a known-good 4WD control module and recheck.	“4WD” fuse blown, “WHT/RED” or “YEL” wire is circuit open or circuit short.

Step	Action	Yes	No
3	**Ground circuit check** 1) Turn ignition switch to OFF position. 2) Check for proper connection to “G26-10” terminal of 4WD control module connector. 3) If OK, measure resistance between “G26-10” terminal of 4WD control module connector and vehicle body ground. *If resistance 1 Ω or less?*	Substitute a known-good 4WD control module and recheck.	Repair ground circuit.

DTC C1243: Internal Circuit Malfunction of 4WD Control Module

S7RW0A3204015

DTC Detecting Condition and Trouble Area

DTC detecting condition	Trouble area
Internal power supply malfunction of 4WD control module	4WD control module

DTC Confirmation Procedure

1) Clear DTC using scan tool.
2) Start engine and run it for 10 seconds. or more.
3) Stop vehicle and check DTC.

Troubleshooting

Substitute a known-good 4WD control module and recheck.

DTC C1250: Coupling Air Temperature Sensor Circuit Open

S7RW0A3204016

Wiring Diagram

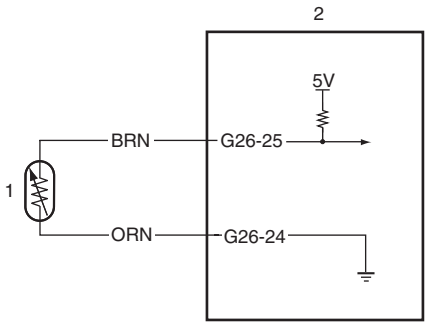

[A]

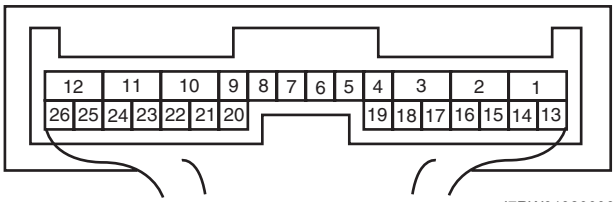

I7RW01320006-01

[A]: 4WD control module connector “G26” (viewed from harness side)	2. 4WD control module
1. Coupling air temperature sensor	

DTC Detecting Condition and Trouble Area

DTC detecting condition	Trouble area
Input signal from coupling air temperature sensor is higher than specified value.	• Coupling air temperature sensor • Coupling air temperature sensor circuit • 4WD control module

DTC Confirmation Procedure

1) Clear DTC using scan tool.
2) Turn ignition switch to ON position for 10 seconds.
3) Check DTC.

Troubleshooting

Step	Action	Yes	No
1	*Was "4WD control system check" performed?*	Go to Step 2.	Go to "4WD Control System Check".
2	**Coupling air temperature sensor circuit check** 1) Disconnect connector from coupling air temperature sensor with ignition switch turned OFF. 2) Check for proper connection to "BRN" and "ORN" terminals of coupling air temperature sensor connector. 3) If connection is OK, measure voltage between "BRN" terminal of coupling air temperature sensor connector and vehicle body ground with ignition switch turned ON. *Is it 4 – 6 V?*	Go to Step 3.	Go to Step 5.
3	**Coupling assembly ground circuit check** 1) Disconnect connector from 4WD control module with ignition switch turned OFF. 2) Measure resistance between "ORN" terminal of coupling air temperature sensor connector and "G26-24" terminal of 4WD control module connector with ignition switch turned OFF. *Is resistance below 5 Ω?*	Go to Step 4.	"ORN" wire is open or high resistance.
4	**Coupling air temperature sensor check** 1) Check coupling air temperature sensor referring to "Coupling Air Temperature Sensor Inspection". *Is it in good condition?*	Substitute a known-good 4WD control module and recheck.	Replace coupling air temperature sensor.
5	**Coupling assembly circuit check** 1) Disconnect connector from 4WD control module with ignition switch turned OFF. 2) Check for proper connection to "G26-25" and "G26-24" terminals of 4WD control module connector. 3) If connection is OK, measure resistance between "G26-25" terminal of 4WD control module connector and vehicle body ground. *Is resistance below 5 Ω?*	"BRN" wire is open or high resistance circuit.	Substitute a known-good 4WD control module and recheck.

DTC C1251: Coupling Air Temperature Sensor Circuit Short

S7RW0A3204017

Wiring Diagram

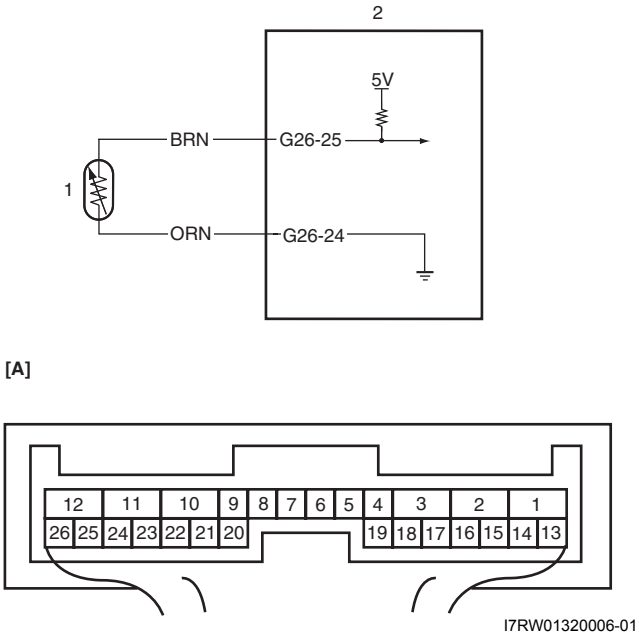

[A]: 4WD control module connector “G26” (viewed from harness side)	2. 4WD control module
1. Coupling air temperature sensor	

DTC Detecting Condition and Trouble Area

DTC detecting condition	Trouble area
Input signal from coupling air temperature sensor is lower than specified value.	• Coupling air temperature sensor • Coupling air temperature sensor circuit • 4WD control module

DTC Confirmation Procedure

1) Clear DTC using scan tool.
2) Turn ignition switch to ON position for 10 seconds.
3) Check DTC.

Troubleshooting

Step	Action	Yes	No
1	*Was “4WD control system check” performed?*	Go to Step 2.	Go to “4WD Control System Check”.
2	**Coupling air temperature sensor circuit check** 1) Disconnect connector from coupling air temperature sensor with ignition switch turned OFF. 2) Check for proper connection to “BRN” and “ORN” terminals of coupling air temperature sensor connector. 3) If connection is OK, measure voltage between “BRN” terminal of coupling air temperature sensor connector and vehicle body ground with ignition switch turned ON. *Is it 4 – 6 V?*	Go to Step 3.	Go to Step 5.

Step	Action	Yes	No
3	**Coupling assembly ground circuit check** 1) Disconnect connector from 4WD control module with ignition switch turned OFF. 2) Measure resistance between “ORN” terminal of coupling air temperature sensor connector and “G26-24” terminal of 4WD control module connector with ignition switch turned OFF. *Is resistance above 1 MΩ?*	Go to Step 4.	“ORN” wire is shorted to ground circuit.
4	**Coupling air temperature sensor check** 1) Check coupling air temperature sensor referring to “Coupling Air Temperature Sensor Inspection”. *Is it in good condition?*	Substitute a known-good 4WD control module and recheck.	Replace coupling air temperature sensor.
5	**Coupling assembly circuit check** 1) Disconnect connector from 4WD control module with ignition switch turned OFF. 2) Check for proper connection to “G26-25” and “G26-24” terminals of 4WD control module connector. 3) If connection is OK, measure resistance between “G26-25” terminal of 4WD control module connector and vehicle body ground. *Is resistance above 1 MΩ?*	“BRN” wire is shorted to ground circuit.	Substitute a known-good 4WD control module and recheck.

DTC C1252: Coupling Assembly Circuit Open

S7RW0A3204018

Wiring Diagram

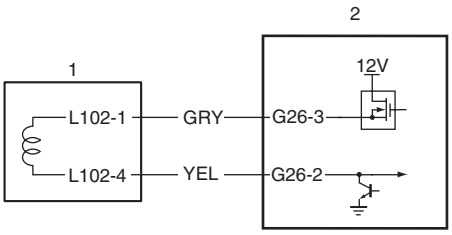

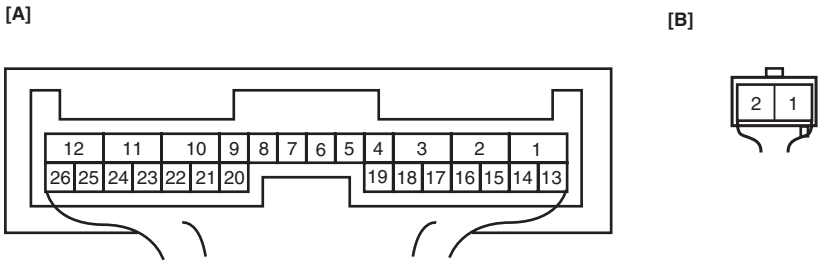

I7RW01320007-01

[A]: 4WD control module connector “G26” (viewed from harness side)	1. Coupling assembly
[B]: Coupling assembly connector “L102” (viewed from harness side)	2. 4WD control module

DTC Detecting Condition and Trouble Area

DTC detecting condition	Trouble area
2WD/4WD switch is changed of 4WD lock position, and then vehicle is not changed for more than 5 seconds.	• Coupling assembly • Coupling assembly circuit • 4WD control module

DTC Confirmation Procedure

1) Clear DTC using scan tool.
2) Start engine and select 2WD/4WD switch to “LOCK” position.
3) Keep engine running at 2000 rpm for 10 seconds. or more.
4) Stop engine and check DTC.

Troubleshooting

Step	Action	Yes	No
1	*Was “4WD control system check” performed?*	Go to Step 2.	Go to “4WD Control System Check”.
2	**Coupling assembly circuit check** 1) Disconnect coupling assembly connector “L102” with ignition switch turned OFF. 2) Check for proper connection to “L102-1” and “L102-4” terminals of coupling assembly connector. 3) If connection is OK, measure voltage between “L102-1” terminal of coupling assembly connector and vehicle body ground. *Is it 10 – 14 V?*	Go to Step 3.	Go to Step 6.
3	**Coupling assembly ground circuit check** 1) Measure resistance between “L102-4” terminal of coupling assembly connector and vehicle body ground with ignition switch turned OFF. *Is resistance below 5 Ω?*	Go to Step 4.	Go to Step 5.
4	**Coupling assembly check** 1) Check coupling assembly referring to “Coupling Assembly Inspection”. *Is it in good condition?*	Substitute a known-good 4WD control module and recheck.	Replace coupling assembly.
5	**Coupling assembly circuit check** 1) Disconnect connector from 4WD control module connector “G26” with ignition switch turned OFF. 2) Check for proper connection to “G26-2” and “G26-3” terminals of 4WD control module connector. 3) If connection is OK, measure resistance between “G26-2” terminal of 4WD control module connector and vehicle body ground. *Is resistance below 5 Ω?*	“YEL” wire is open or high resistance circuit.	Substitute a known-good 4WD control module and recheck.
6	**Coupling assembly circuit check** 1) Disconnect connector from 4WD control module connector “G26” with ignition switch turned OFF. 2) Check for proper connection to “G26-3” terminal of 4WD control module connector. 3) If connection is OK, measure resistance between “G26-3” terminal of 4WD control module connector and “L102-1” terminal of coupling assembly connector. *Is resistance below 5 Ω?*	Substitute a known-good 4WD control module and recheck.	“GRY” wire is open or high resistance circuit.

DTC C1253: Coupling Assembly Circuit Short

S7RW0A3204019

Wiring Diagram

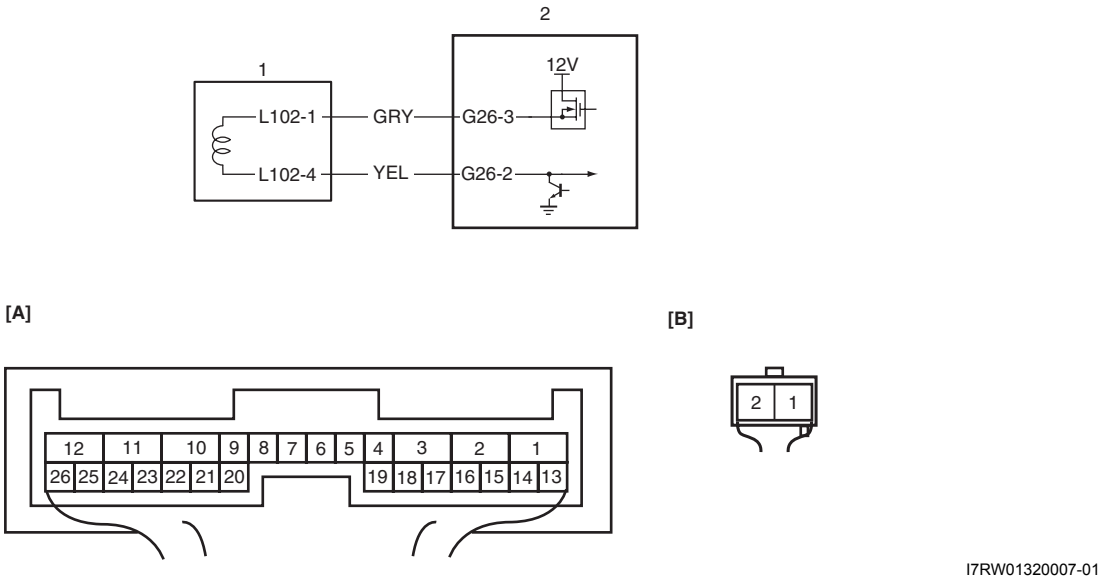

I7RW01320007-01

[A]: 4WD control module connector “G26” (viewed from harness side)	1. Coupling assembly
[B]: Coupling assembly connector “L102” (viewed from harness side)	2. 4WD control module

DTC Detecting Condition and Trouble Area

DTC detecting condition	Trouble area
2WD/4WD switch is changed of 4WD lock position, and then vehicle is not changed for more than 5 seconds.	• Coupling assembly • Coupling assembly circuit • 4WD control module

DTC Confirmation Procedure

1) Clear DTC using scan tool.
2) Start engine and select 2WD/4WD switch to “LOCK” position.
3) Keep engine running at 2000 rpm for 10 seconds. or more.
4) Stop engine and check DTC.

Troubleshooting

Step	Action	Yes	No
1	*Was “4WD control system check” performed?*	Go to Step 2.	Go to “4WD Control System Check”.
2	**Coupling assembly circuit check** 1) Disconnect coupling assembly connector “L102” with ignition switch turned OFF. 2) Check for proper connection to “L102-1” and “L102-4” terminals of coupling assembly connector. 3) If connection is OK, measure voltage between “L102-1” terminal of coupling assembly connector and vehicle body ground. *Is it 10 – 14 V?*	Go to Step 3.	Go to Step 6.
3	**Coupling assembly ground circuit check** 1) Measure resistance between “L102-4” terminal of coupling assembly connector and vehicle body ground with ignition switch turned OFF. *Is resistance below 5 Ω?*	Go to Step 4.	Go to Step 5.

Step	Action	Yes	No
4	**Coupling assembly check** 1) Check coupling assembly referring to “Coupling Assembly Inspection”. *Is it in good condition?*	Substitute a known-good 4WD control module and recheck.	Replace coupling assembly.
5	**Coupling assembly circuit check** 1) Disconnect connector from 4WD control module connector “G26” with ignition switch turned OFF. 2) Check for proper connection to “G26-2” and “G26-3” terminals of 4WD control module connector. 3) If connection is OK, measure resistance between “G26-2” terminal of 4WD control module connector and vehicle body ground. *Is resistance above 1 MΩ?*	“YEL” wire is shorted to ground circuit.	Substitute a known-good 4WD control module and recheck.
6	**Coupling assembly circuit check** 1) Disconnect connector from 4WD control module connector “G26” with ignition switch turned OFF. 2) Check for proper connection to “G26-3” terminal of 4WD control module connector. 3) If connection is OK, measure resistance between “G26-3” terminal of 4WD control module connector and “L102-1” terminal of coupling assembly connector. *Is resistance above 1 MΩ?*	Substitute a known-good 4WD control module and recheck.	“GRY” wire is shorted to ground circuit.

DTC C1254: 2WD/4WD Switch Malfunction

S7RW0A3204020

Wiring Diagram

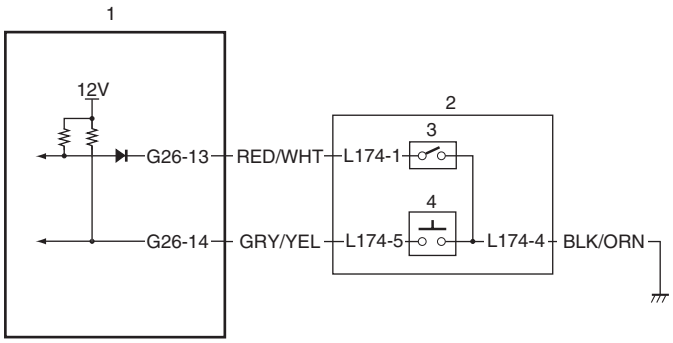

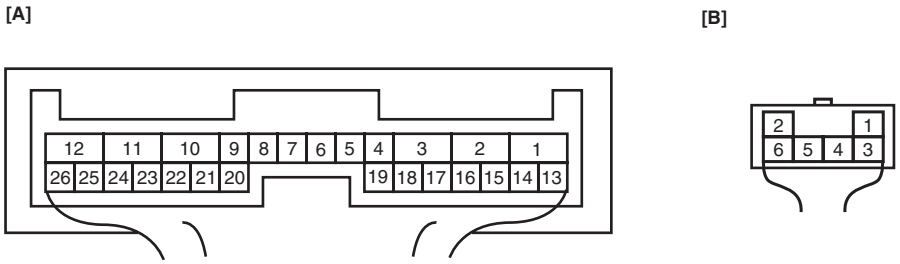

I7RW01320008-01

[A]: 4WD control module connector “G26” (viewed from harness side)	2. 2WD/4WD switch
[B]: 2WD/4WD switch connector “L174” (viewed from harness side)	3. “4WD” switch
1. 4WD control module	4. “4WD-lock” switch

DTC Detecting Condition and Trouble Area

DTC detecting condition	Trouble area
2WD/4WD switch combination different from specification is detected for more than 5 seconds.	• 2WD/4WD switch • 2WD/4WD switch circuit • 4WD control module

DTC Confirmation Procedure

1) Clear DTC using scan tool.
2) Select 2WD/4WD switch to “2WD” position and keep its position for 10 seconds. Similarly select 2WD/4WD switch to “AUTO” and “LOCK” position.
3) Check DTC.

Troubleshooting

Step	Action	Yes	No
1	*Was “4WD control system check” performed?*	Go to Step 2.	Go to “4WD Control System Check”.
2	**2WD/4WD switch circuit check** 1) Disconnect 2WD/4WD switch connector “L174” with ignition switch turned OFF. 2) Check for proper connection to “L174-1” and “L174-5” terminals of 2WD/4WD switch connector. 3) If connection is OK, measure voltage between “L174-1” terminal or “L174-5” terminal of 2WD/4WD switch connector and vehicle body ground. *Is it 10 – 14 V?*	Go to Step 3.	Go to Step 5.
3	**2WD/4WD switch ground circuit check** 1) Measure resistance between “L174-4” terminal of 2WD/4WD switch connector and vehicle body ground with ignition switch turned OFF. *Is resistance below 5 Ω?*	Go to Step 4.	“BLK/ORN” wire is shorted to ground.
4	**2WD/4WD switch check** 1) Check 2WD/4WD switch referring to “2WD/4WD Switch Inspection”. *Is it in good condition?*	Substitute a known-good 4WD control module and recheck.	Replace 2WD/4WD switch.
5	**2WD/4WD switch circuit check** 1) Disconnect connector from 4WD control module connector “G26” with ignition switch turned OFF. 2) Check for shorted to ground in related circuits. • Between “G26-13” terminal of 4WD control module connector and “L174-1” terminal of 2WD/4WD switch connector. • Between “G26-14” terminal of 4WD control module connector and “L174-5” terminal of 2WD/4WD switch connector. *Are they in good condition?*	Substitute a known-good 4WD control module and recheck.	Repair circuit.

DTC U0073: Control Module Communication Bus Off

S7RW0A3204021

Refer to “Troubleshooting for CAN-DTC in Section 1A”.

DTC U0100: Lost Communication with ECM

S7RW0A3204022

Refer to “Troubleshooting for CAN-DTC in Section 1A”.

DTC U0121: Lost Communication with ABS / ESP® Control Module

S7RW0A3204023

Refer to “Troubleshooting for CAN-DTC in Section 1A”.

DTC U0155: Lost Communication with Instrument Panel Cluster (IPC) Control Module

S7RW0A3204024

Refer to “Troubleshooting for CAN-DTC in Section 1A”.

Inspection of 4WD Control Module and Its Circuits

S7RW0A3204025

4WD control module and its circuits can be checked at coupler connected to 4WD control module by measuring voltage, pulse signal.

⚠ CAUTION

4WD control module cannot be checked by itself. It is strictly prohibited to connect voltmeter or ohmmeter to 4WD control module with couplers disconnected from it.

Voltage and Signal Check

1) Check voltage using voltmeter (1) connected to each terminal of couplers.
2) Check signal using oscilloscope (2) connected to each terminal of couplers.

NOTE

- **As each terminal voltage is affected by the battery voltage, confirm that it is 11 V or more when ignition switch is turned ON.**
- **Pulse signal cannot be measured by voltmeter. It can be measured by oscilloscope.**
- **Item with asterisk (*) in normal voltage column can be read only by oscilloscope.**

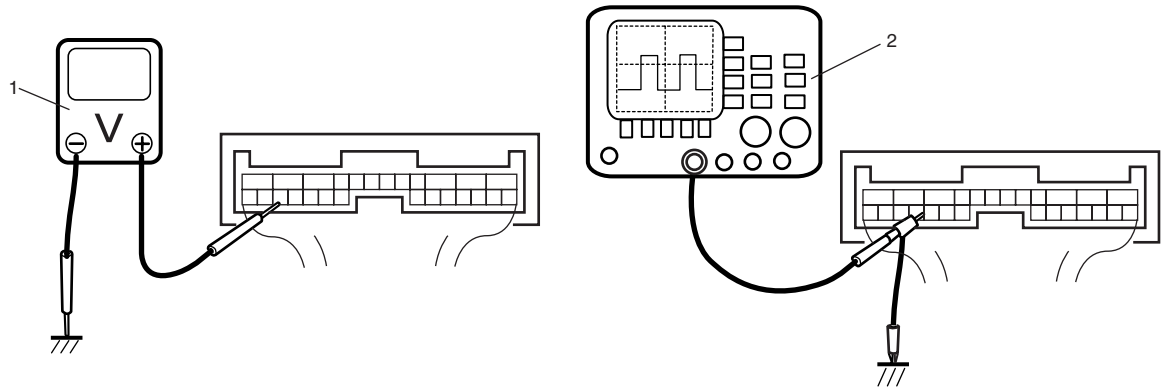

I4JA01332053-01

Terminal arrangement of 4WD control module connector (Viewed from harness side)

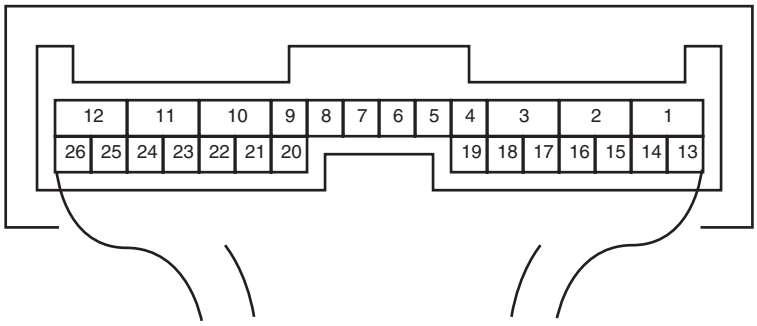

I4JA01332054-01

Terminal Number	Wire Color	Circuit	Normal Voltage	Condition
G26-1	—	—	—	—
G26-2	GRN	Coupling assembly (ground)	About 5 V	Ignition switch turned ON position
G26-3	YEL	Coupling assembly (power)	10 – 12 V	• Run engine at idle speed and 2WD/4WD switch at 4WD lock position • Selector lever at “P” or “N” range (A/T model)
			*0 – 12 V (“Reference waveform No.1: ”)	• Run engine at idle speed and 2WD/4WD switch at 4WD lock position • Selector lever at other than “P” or “N” range (A/T model) or depress accelerator pedal (M/T model)
			About 5 V	Above-mentioned condition
G26-4	—	—	—	—
G26-5	—	—	—	—
G26-6	—	—	—	—
G26-7	—	—	—	—
G26-8	—	—	—	—
G26-9	—	—	—	—
G26-10	BLK	Ground	0 – 1 V	—
G26-11	WHT/RED	Power source for internal memory	10 – 14 V	—
G26-12	RED/BLK	Power source	10 – 14 V	Ignition switch turned ON position
G26-13	RED/WHT	4WD switch	0 – 1 V	Ignition switch turned ON position and 2WD/4WD switch at 4WD auto or 4WD lock position
			10 – 14 V	Ignition switch turned ON position and 2WD/4WD switch at 2WD position
G26-14	GRN/YEL	4WD lock switch	0 – 1 V	Ignition switch turned ON position and 2WD/4WD switch kept pushing at 4WD lock position
			10 – 14 V	Ignition switch turned ON position and 2WD/4WD switch released at 4WD lock position
G26-15	—	—	—	—
G26-16	—	—	—	—
G26-17	—	—	—	—
G26-18	—	—	—	—
G26-19	—	—	—	—
G26-20	—	—	—	—
G26-21	BLU	Data link connector (DLC)	10 – 14 V	Ignition switch turned ON position
G26-22	RED	CAN communication line (High)	*2.5 – 3.6 V (“Reference waveform No.2: ”)	Ignition switch turned ON position
G26-23	WHT	CAN communication line (Low)	*1.6 – 2.5 V (“Reference waveform No.2: ”)	Ignition switch turned ON position

Terminal Number	Wire Color	Circuit	Normal Voltage	Condition
G26-24	ORN	Coupling air temperature sensor (ground)	0 – 1 V	Ignition switch turned ON position
G26-25	BRN	Coupling air temperature sensor (power)	About 2.5 V	Ignition switch turned ON position
G26-26	—	—	—	—

Reference waveform No.1

Coupling assembly signal

Measurement terminal	CH1: “G26-3” to “G26-2”
Oscilloscope setting	CH1: 5 V / DIV TIME: 400 μs / DIV
Measurement condition	• Run engine at idle speed and 2WD/4WD switch at 4WD lock position • Selector lever at other than “P” or “N” range (A/T model) • Depress accelerator pedal (M/T model)

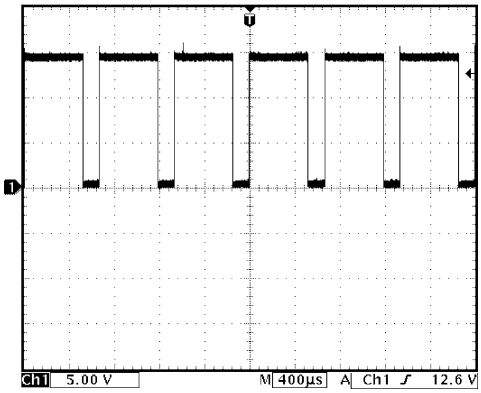

I7RW01320011-01

Reference waveform No.2

CAN communication signal

Measurement terminal	CH1: “G26-22” to “G26-10” CH2: “G26-23” to “G26-10”
Oscilloscope setting	CH1: 1 V / DIV, CH2: 1 V / DIV TIME: 400 μs / DIV
Measurement condition	Ignition switch ON position

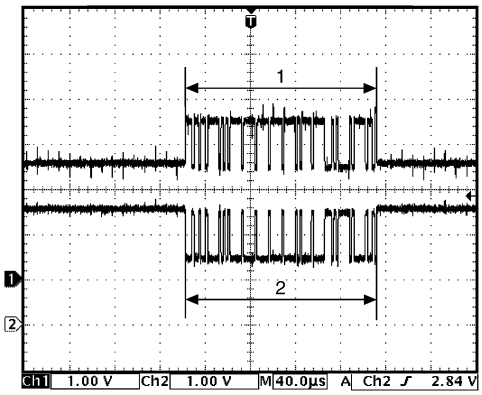

I7RW01320012-01

1.	CAN communication line signal (high)
2.	CAN communication line signal (low)

Repair Instructions

Rear Differential Oil Level Check

S7RW0A3206001

1) Lift up vehicle and check oil leakage. Repair leaky point, if any.
2) Remove oil level / filler plug (1) and check oil contamination and oil level is lower end of oil level / filler plug hole (2).
   If oil is excessive dirty or insufficient, replace oil or pour specified oil up to plug hole.
3) Apply sealant to thread of level / filler plug, and then tighten it to specified torque.

   "A": Sealant 99000–31260 (SUZUKI Bond No.1217G)

   Tightening torque
   Differential oil level / filler plug (a): 23 N·m (2.3 kgf-m, 17.0 lb-ft)

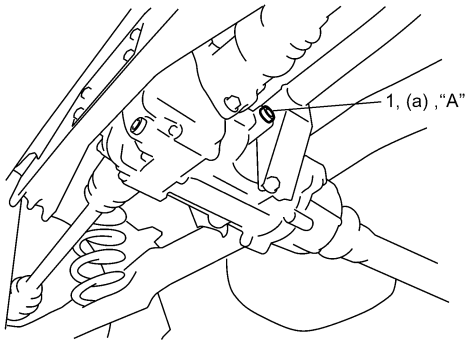

I5RW0A320015-01

Rear Differential Oil Change

S7RW0A3206002

1) Before changing or inspecting oil, be sure to stop engine and lift vehicle horizontally.
2) With vehicle lifted up, check leakage.
   If leakage exists, correct it.

   NOTE

   Whenever vehicle is hoisted for any other service work than oil change, also be sure to check for oil leakage.

3) Remove oil filler plug (2).
4) Remove drain plug (1), and drain old oil.
5) Apply sealant to thread of drain plug (1), and tighten it to specified torque.

   "A": Sealant 99000–31260 (SUZUKI Bond No.1217G)

   Tightening torque
   Differential oil drain plug (a): 23 N·m (2.3 kgf-m, 17.0 lb-ft)

6) Pour new specified oil until oil level reaches bottom of oil filler plug hole (3) as shown in figure.

   NOTE

   - **Hypoid gear oil must be used for differential.**
   - **It is highly recommended to use API GL-5 80W-90 gear oil.**

   Differential oil specification
   : API GL-5 (For SAE classification, refer to viscosity chart [A] in figure.)

   Rear differential oil capacity
   Reference: 0.7 – 0.9 liters (1.5/1.2 – 1.9/1.6 US/ Imp. pt.)

7) Apply sealant to thread of level / filler plug, and then tighten it to specified torque.

   "A": Sealant 99000–31260 (SUZUKI Bond No.1217G)

   Tightening torque
   Differential oil level / filler plug (b): 23 N·m (2.3 kgf-m, 17.0 lb-ft)

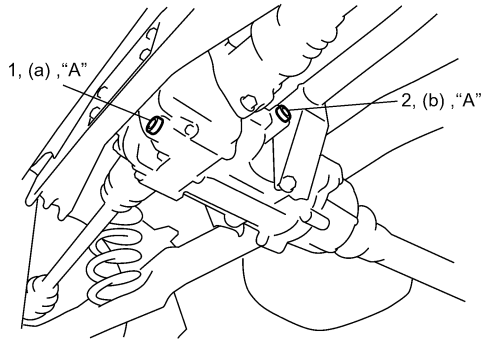

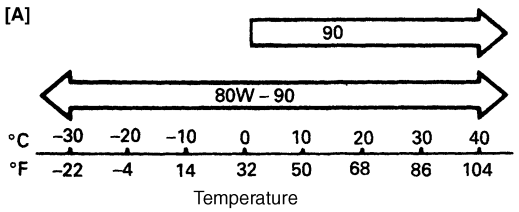

I5RW0A320016-02

2WD/4WD Switch Removal and Installation

S7RW0A3206003

Removal

1) Disconnect negative cable at battery.
2) Remove console box (2).
3) Remove 2WD/4WD switch (1) from console box.

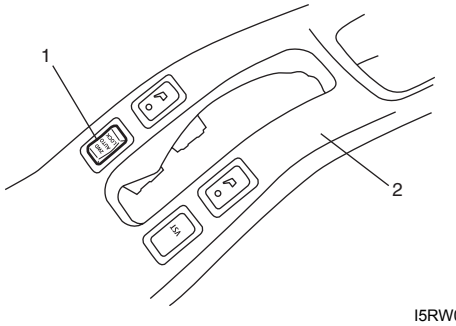

I5RW0A320017-02

Installation

Reverse removal procedure for installation.

2WD/4WD Switch Inspection

S7RW0A3206004

Check 2WD/4WD switch for continuity between terminals at each switch position.
If check result is not as specified, replace switch.

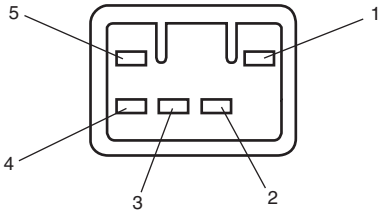

Terminal / Switch position	1	2	3	4	5
2WD				○	○
AUTO		○	○	○	○
LOCK	○	○	○	○	○

I5RW0A320018-02

4WD Control Module Removal and Installation

S7RW0A3206005

Removal

1) Disconnect negative cable at battery.
2) Remove center ventilation louver referring to “Center Ventilation Louver Removal and Installation in Section 7A”.
3) Disconnect connector (1) from 4WD control module.
4) Remove 4WD control module (2).

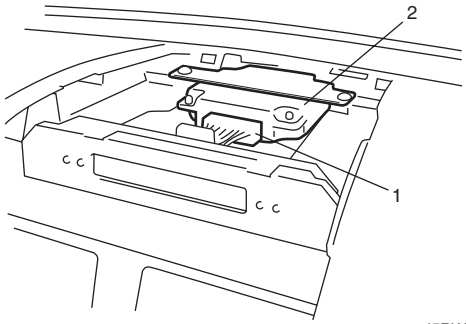

I5RW0A320019-01

Installation

Reverse removal procedure for installation.

Coupling Air Temperature Sensor Removal and Installation

S7RW0A3206006

Removal

1) Dismount rear differential referring to “Rear Differential Dismounting and Remounting”.
2) Remove coupling air temperature sensor (1) from rear differential (2).

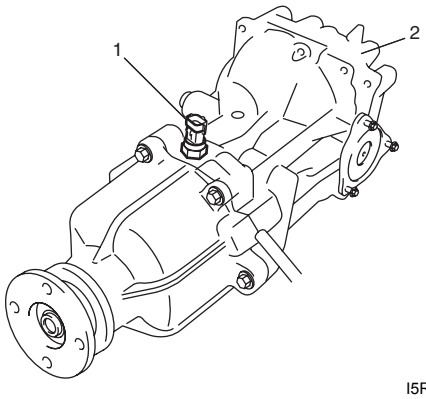

I5RW0A320020-02

Installation

Reverse removal procedure for installation, noting the following point.

- Tighten coupling air temperature sensor to specified torque.

  Tightening torque
  Coupling air temperature sensor: 18 N·m (1.8 kgf-m, 13.0 lb-ft)

Coupling Air Temperature Sensor Inspection

S7RW0A3206007

⚠ CAUTION

Do not heat up coupling air temperature sensor more than 100 °C (212 °F). Otherwise, coupling air temperature sensor will be damaged.

- Blow hot air to temperature sensing part (2) of coupling air temperature sensor (3) using hot air drier (4) and measure resistance between sensor terminals while heating air gradually.
  If measured resistance does not show such characteristic as shown, replace air temperature sensor.

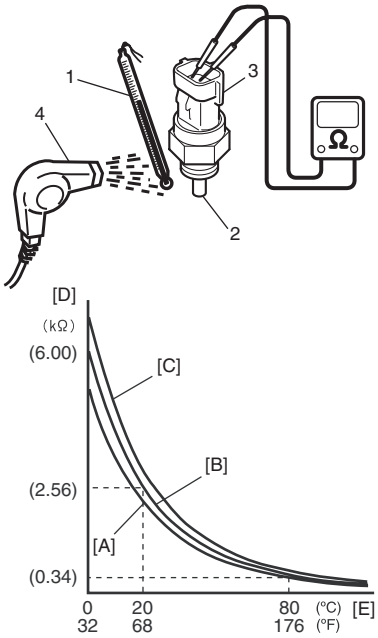

I5RW0A320021-01

[A]: Lower limit	[D]: Resistance
[B]: Normal	[E]: Temperature
[C]: Upper limit	1. Temperature gauge

Coupling Assembly Inspection

S7RW0A3206008

- Check coupling assembly for oil leakage. If leakage exists, replace it.
- Measure resistance between “a” terminal and “b” terminal of coupling connector (1).
  If measured resistance is out of specification, check harness for open or short.
  If OK, replace coupling assembly.

Coupling assembly resistance
: 2 – 3 Ω

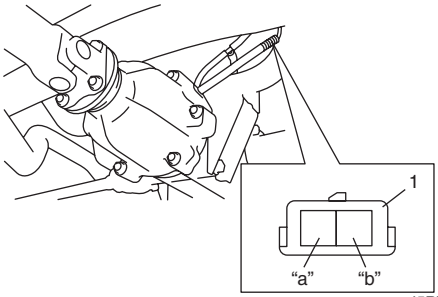

I5RW0A320064-01

Rear Differential Mountings Components

S7RW0A3206009

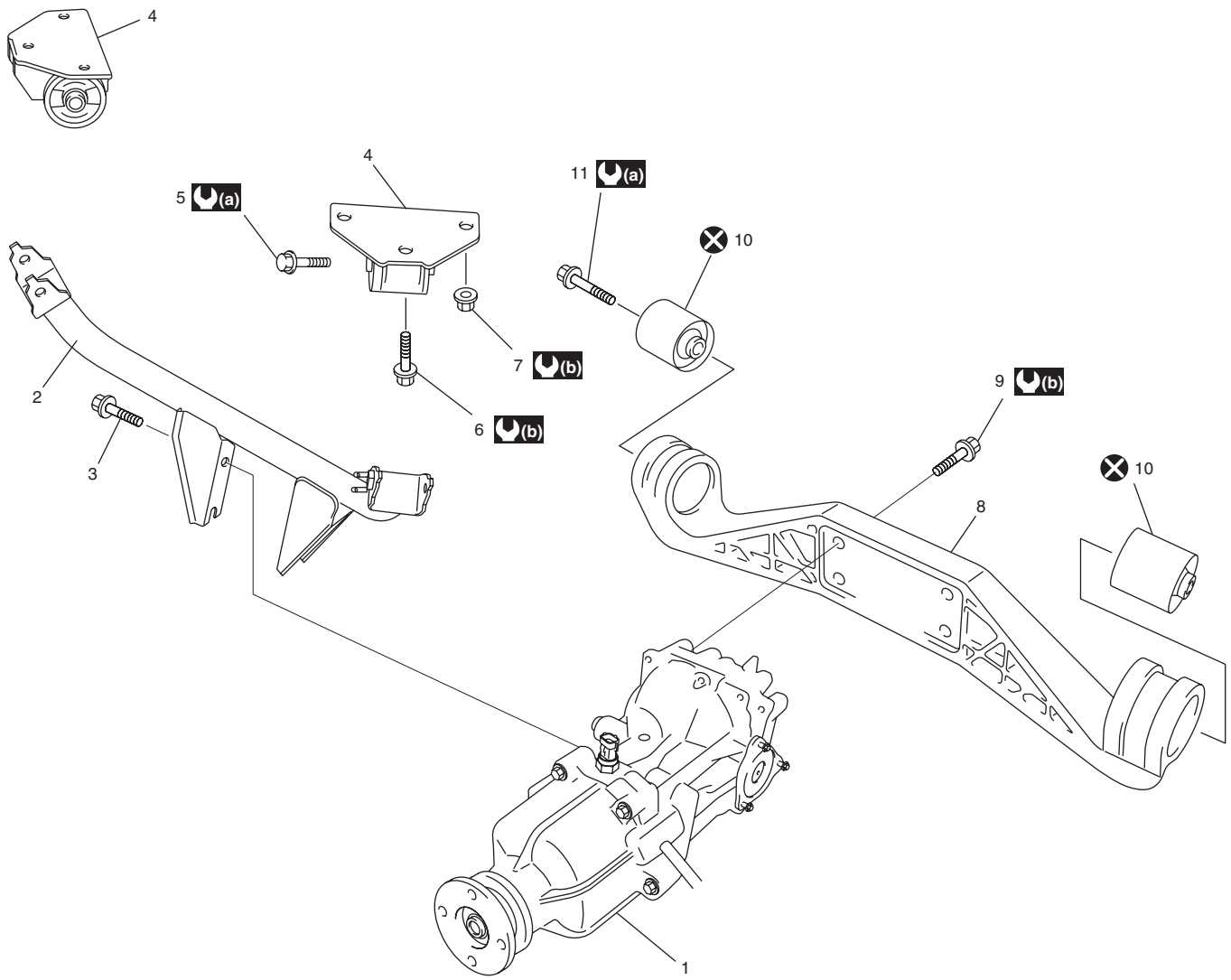

I5RW0A320022-04

1. Rear differential	6. Front mounting to body bolt	11. Rear mounting bolt
2. Front mounting arm	7. Front mounting to body nut	(a) : 80 N·m (8.0 kgf-m, 58.0 lb-ft)
3. Mounting arm bolt	8. Rear mounting bracket	(b) : 50 N·m (5.0 kgf-m, 36.0 lb-ft)
4. Front mounting	9. Rear mounting bracket bolt	⊗ : Do not reuse.
5. Front mounting bolt	10. Rear mounting	

Front Mounting Arm and/or Rear Mounting Bracket Assembly Removal and Installation

S7RW0A3206010

Remove and install front mounting arm and/or rear mounting bracket after rear differential removed.
For tightening torque of each bolt and nut, refer to “Rear Differential Mountings Components”.

Rear Mounting Bracket Assembly Disassembly and Reassembly

S7RW0A3206011

Disassembly

Drive out mountings from rear mounting bracket using special tool and hydraulic press.

Special tool
(A): 09913–70123
(B): 09951–26020

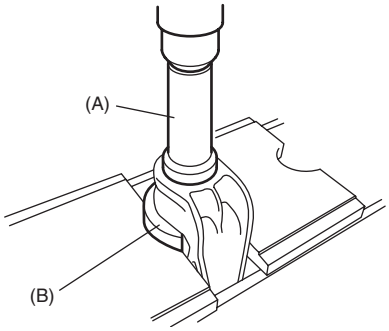

I5RW0A320023-02

Reassembly

Press mountings in rear mounting bracket using special tool and hydraulic press with caring its installation position shown in figure.

Special tool
(A): 09913–85210
(B): 09951–26020

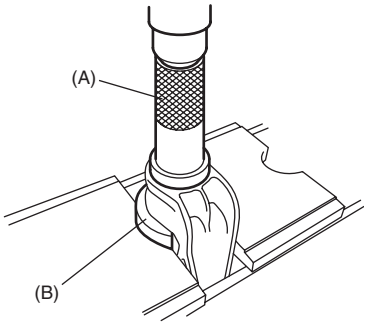

I5RW0A320024-02

Rear Differential Dismounting and Remounting

S7RW0A3206012

Dismounting

1) Lift up vehicle and drain oil from rear differential.
2) Remove propeller shaft referring to “Propeller Shaft Assembly Removal and Installation in Section 3D”.
3) Remove rear drive shafts assembly referring to “Rear Drive Shaft Assembly Removal and Installation: Rear in Section 3A”.
4) Support rear differential (3) with transmission jack (4).
5) Remove mounting arm bolts (2) and rear mounting bolts (1), and then lower rear differential with rear mounting bracket.

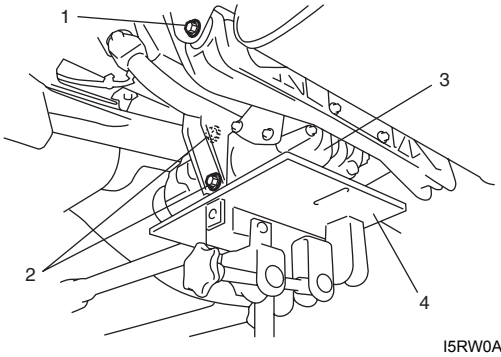

I5RW0A320025-01

Remounting

Reverse dismounting procedure for remounting of rear differential, noting the following points.

- Tighten each bolt to specified torque referring to “Rear Differential Mountings Components”.
- Fill gear oil to rear differential referring to “Rear Differential Oil Change”.

Rear Differential Components

S7RW0A3206013

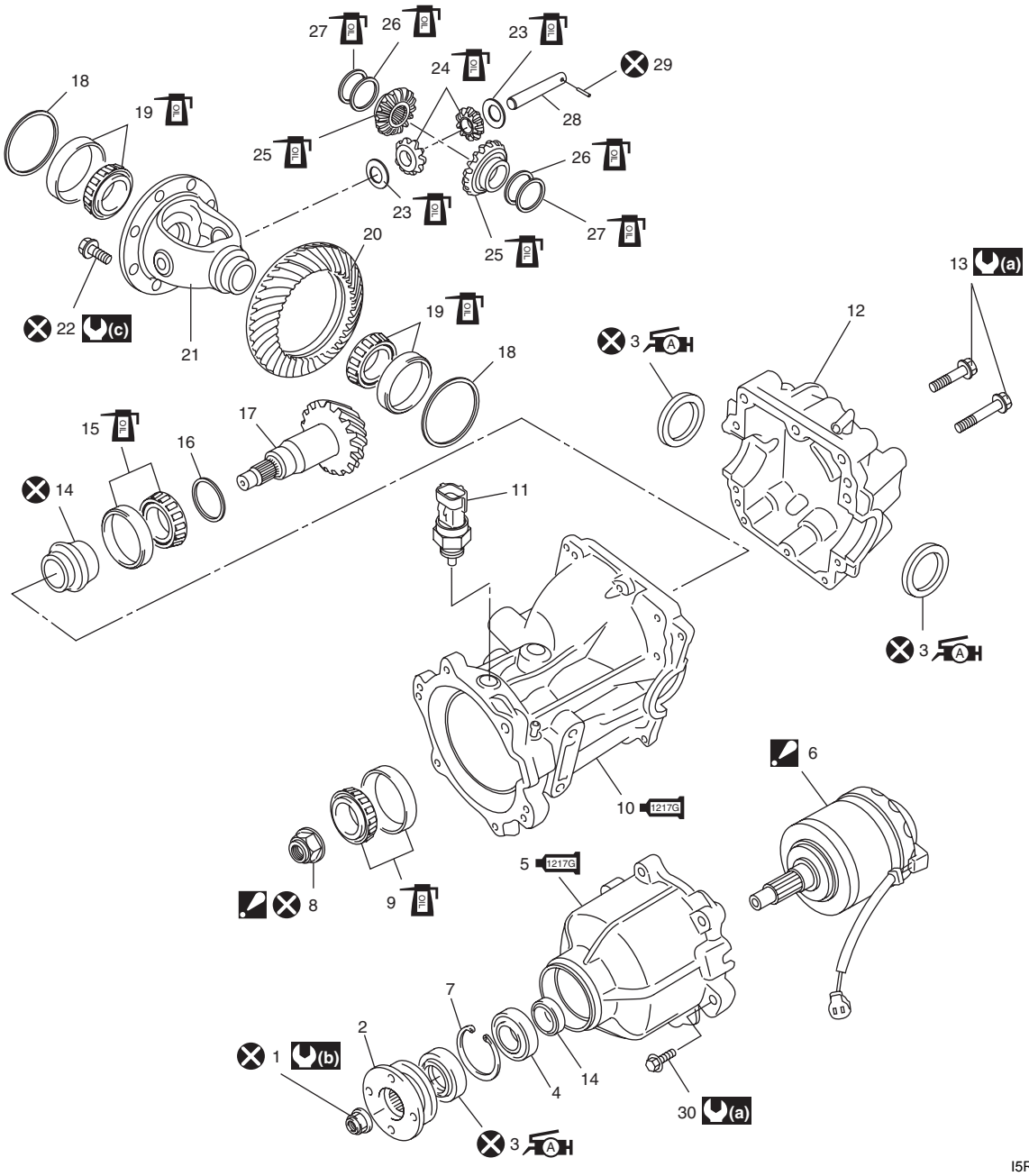

I5RW0A320026-02

1. Flange nut	13. Differential cover bolt	25. Differential gear
2. Companion flange	14. Spacer	26. Spring washer
3. Oil seal : Apply grease 99000-25010 to oil seal lip.	15. Rear bearing	27. Thrust washer
4. Coupling front bearing	16. Shim	28. Pinion shaft
1217G 5. Coupling case : Apply sealant 99000-31260 to mating surface of carrier and coupling case.	17. Bevel pinion	29. Pinion shaft pin
6. Coupling assembly : Never disassemble.	18. Shim	30. Coupling case bolt
7. Snap ring	19. Differential side bearing	(a) : 23 N·m (2.3 kgf-m, 17.0 lb-ft)
8. Bevel pinion nut : Tighten nut so as rotation torque of bevel pinion to be in specified value.	20. Bevel gear	(b) : 125 N·m (12.5 kgf-m, 90.5 lb-ft)
9. Front bearing	21. Differential case	(c) : 78 N·m (7.8 kgf-m, 56.5 lb-ft)
1217G 10. Differential carrier : Apply sealant 99000-31260 to mating surface of carrier and rear cover.	22. Bevel gear bolt	: Do not reuse.
11. Coupling air temperature sensor	23. Pinion washer	: Apply differential oil.
12. Differential cover	24. Pinion	

Rear Differential Disassembly and Reassembly

S7RW0A3206014

Disassembly

1) Remove rear mounting bracket from rear differential referring to “Front Mounting Arm and/or Rear Mounting Bracket Assembly Removal and Installation”.
2) Remove drive shaft flanges.
3) Separate coupling case from differential carrier using special tool.

   Special tool
   : 09912–34510

4) Hold companion flange with special tool and then remove flange nut.

   Special tool
   (A): 09930–40113

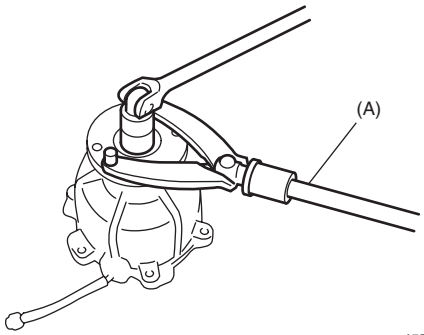

I5RW0A320027-01

5) Remove companion flange (1) from pinion. Use special tool if it is hard to remove.

   Special tool
   (A): 09913–65135

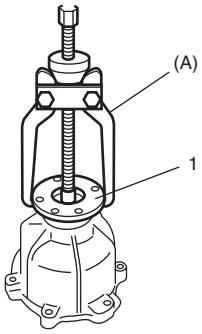

I5RW0A320028-01

6) Remove coupling assembly (1) by using hydraulic press.

⚠ CAUTION

Do not drop coupling assembly. If it is dropped, replace it with a new one.

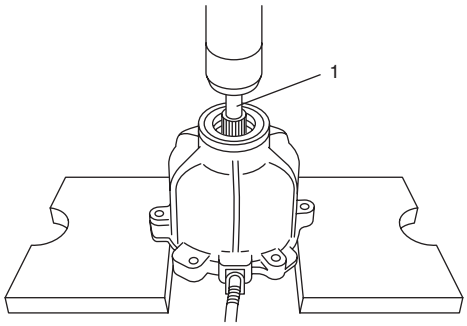

I5RW0A320029-01

7) Disassemble coupling case as follows, if necessary.
   a) Remove oil seal using special tool.

      Special tool
      (A): 09913–50121

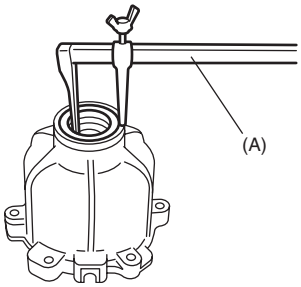

I5RW0A320030-01

   b) Remove snap ring using snap ring pliers.
   c) Remove bearing using special tool and hydraulic press.

      Special tool
      (A): 09913–75830

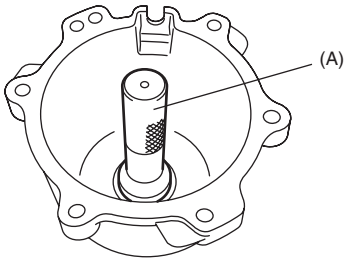

I5RW0A320031-01

8) Remove oil seals from rear differential (1) using special tool.

Special tool
(A): 09913–50121

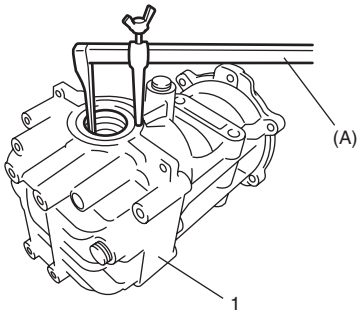

I5RW0A320032-01

9) Remove differential cover (1) using special tool, and then take out differential assembly, outer race and shim all at once.

Special tool
(A): 09912–34510

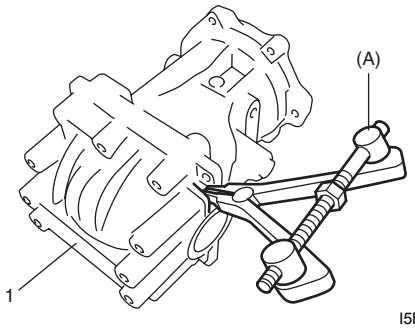

I5RW0A320033-01

10) Pull out differential side bearings (1) using special tools.

Special tool
(A): 09913–60910
(B): 09925–88210

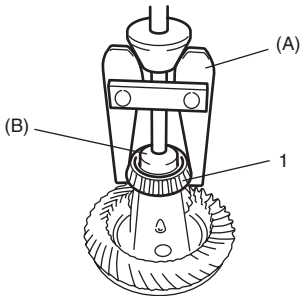

I5RW0A320034-02

11) Remove drive bevel gear (hypoid gear), differential gears, differential pinions and pinion shaft as follows.

a) With aluminum plates (2) placed on vise first, grip differential case with it and remove drive bevel gear (hypoid gear) (3) by removing its bolts (1).

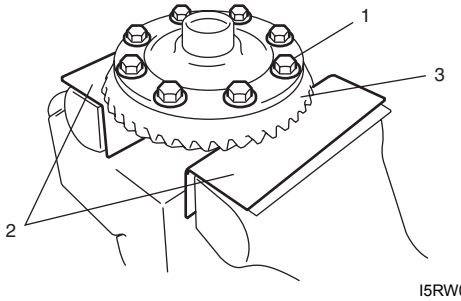

I5RW0A320035-01

b) Drive out differential side pinion shaft pin with special tool and hammer.

Special tool
(B): 09922–85811

c) Disassemble differential gears (2), pinions (3), washers and shaft (4) in differential case (1).

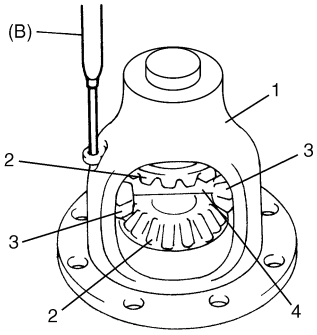

I5RW0A320036-01

12) Remove bevel pinion nut with special tool.

Special tool
(A): 09927–27910

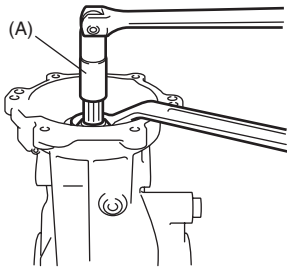

I5RW0A320037-04

13) Remove rear bearing (2) from drive bevel pinion (1) by using bearing puller (3) and hydraulic press.

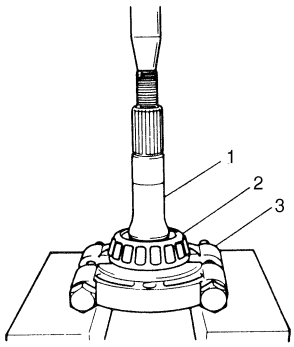

I3RH01322026-01

14) Using a hammer and brass bar (1), drive out front bearing outer race (2).

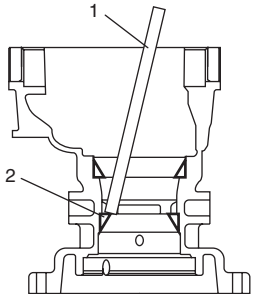

I5RW0A320038-01

15) Using a hammer and brass bar (1), drive out rear bearing outer race (2).

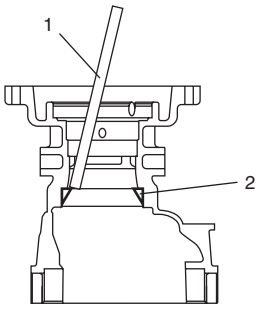

I5RW0A320039-01

Reassembly

Judging from faulty conditions noted before disassembly and what is found through visual check of bearing and gear tooth etc. after disassembly, prepare replacing parts and proceed to reassembly according to procedures as described in the following.

⚠ CAUTION

- **Bevel gear and pinion must be replaced as a set when either replacement becomes necessary.**
- **When replacing taper roller bearing, replace as inner race & outer race assembly.**

1) Press-fit bevel pinion bearing outer races to differential carrier (1) by using special tools and hydraulic press as shown in the figure.

Special tool
(A): 09913–85210
(B): 09913–75510

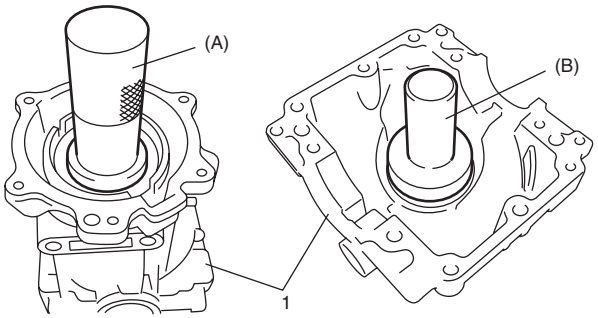

I5RW0A320040-02

2) After applying differential oil to differential gears (4), pinions (5), pinion shaft (3), side washers (1), spring washers (7) and pinion washers (2), install them in differential case (6).
For correct installing direction of side washers and spring washers, refer to figure.

NOTE

Used left and right differential side washers are not interchangeable.

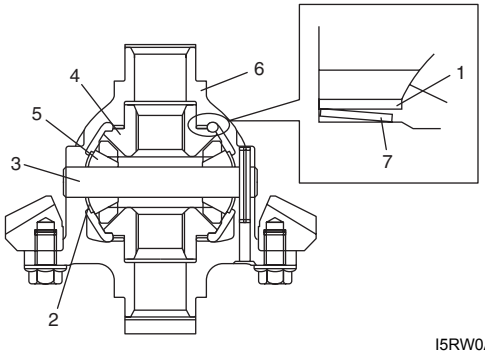

I5RW0A320041-01

3) Check pinion gear (1) for smooth rotation.

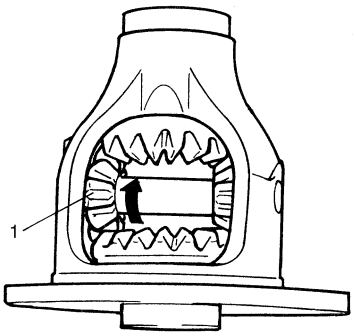

I3RH01322031-01

4) Align holes of pinion shaft and differential case and drive in differential pinion shaft pin till they are flush with end surface of case.

Special tool
(A): 09922–85811

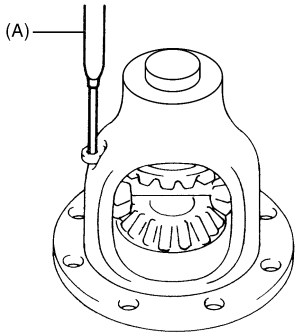

I5RW0A320042-01

5) Put bevel gear (2) on differential case (3) and tighten new bolts (1) to specified torque.

⚠ CAUTION

Use of any other bolts than that specified is prohibited.

Tightening torque
Bevel gear bolt (a): 73 N·m (7.3 kgf-m, 52.0 lb-ft)

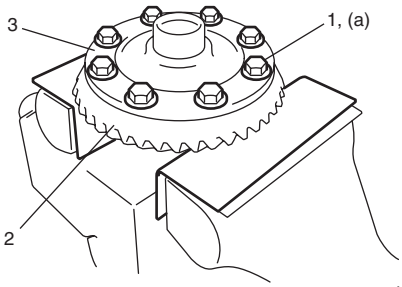

I5RW0A320043-01

6) Press-fit differential right side bearing (1) with special tools and hydraulic press.

Special tool
(A): 09913–80113
(B): 09926–48010

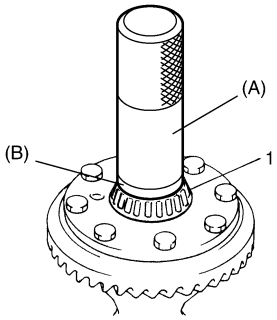

I5RW0A320044-01

7) Hold differential right side bearing (2) with special tool and press-fit differential left side bearing (1) with special tools and hydraulic press.

NOTE

Be sure to use bearing holder for the purpose of protecting lower bearing.

Special tool
(A): 09913–80113
(B): 09926–48010
(C): 09925–88210

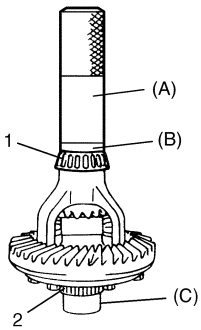

I5RW0A320045-01

8) To engage drive bevel pinion and gear correctly, it is pre-required to install drive bevel pinion to differential carrier properly by using adjusting shim as described on the followings. Shown below is relative positions of drive bevel pinion, differential carrier and mounting dummy.

Special tool
(A): 09922–76120
(B): 09922–76250
(C): 09922–76140
(D): 09922–76420
(E): 09922–76330
(F): 09922–76150
(G): 09922–76340
(H): 09922–76530

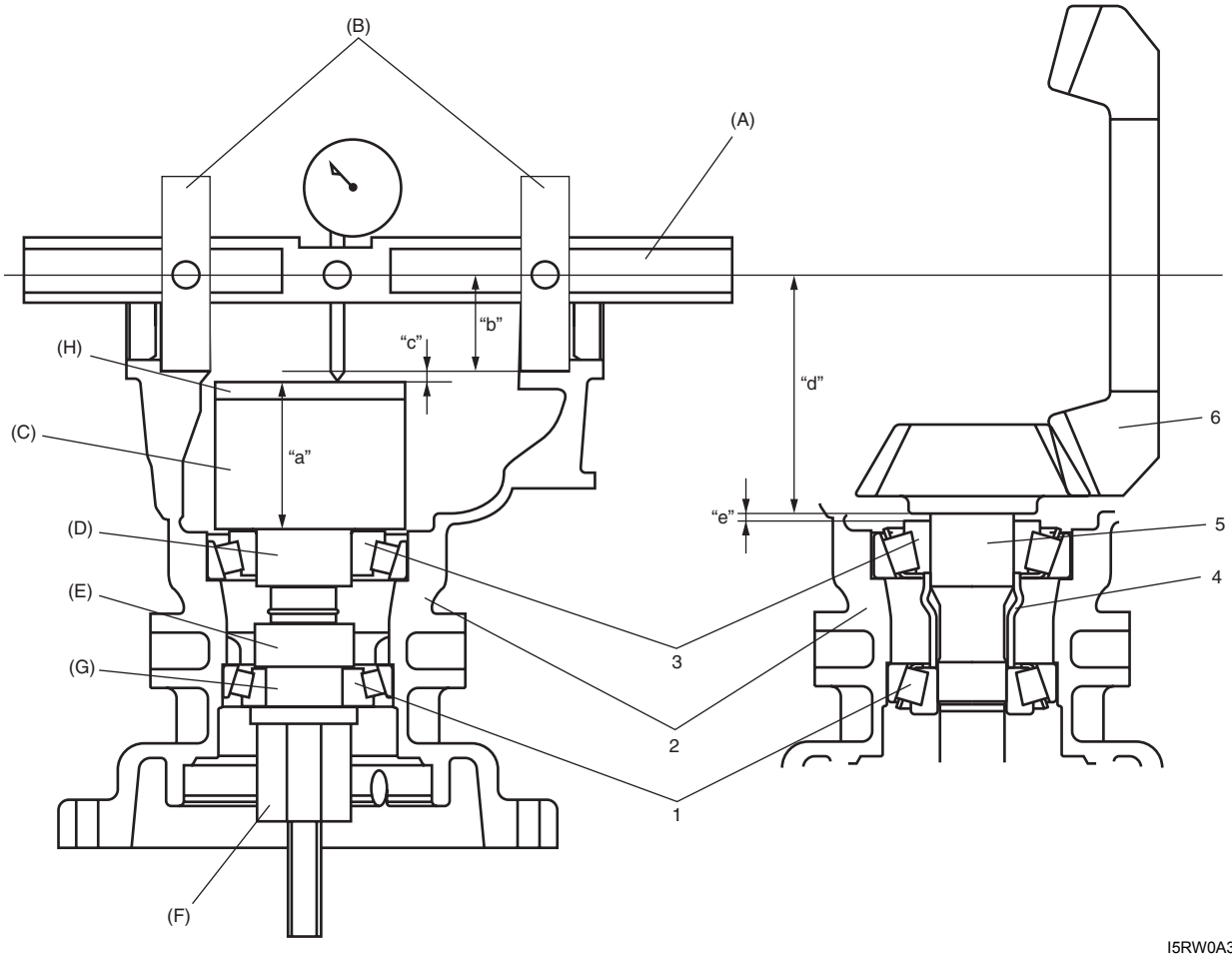

I5RW0A320046-03

1. Front bearing	"a": Pinion dummy height + Attachment height 49 mm/1.929 in.
2. Differential carrier	"b": Axle dummy radius 31 mm/1.220 in.
3. Rear bearing	"a" + "b": Mounting dummy size 80 mm/3.149 in.
4. Spacer	"c": Measured dimension
5. Drive bevel pinion	"d": Drive bevel pinion mounting distance 80 mm/3.149 in.
6. Drive bevel gear	"e": Shim size for mounting distance adjustment ("e" = "c")

9) Set special tools and make drive bevel pinion mounting dummy.

Special tool
(A): 09922–76120
(B): 09922–76250

10) Install dial gauge (1) to mounting dummy as shown in figure.

Special tool set distance
“a”: 38.0 mm (1.496 in.)
“b”: 0 mm (0.000 in.)

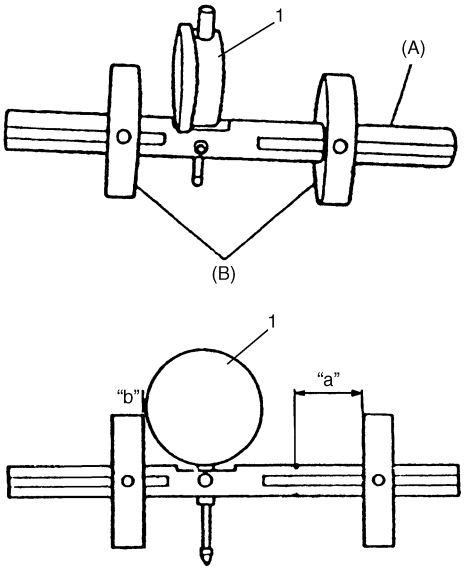

I5RW0A320047-01

11) Set special tools and make drive bevel pinion dummy.

Special tool
(A): 09922–76140
(B): 09922–76420
(C): 09922–76330
(D): 09922–76340

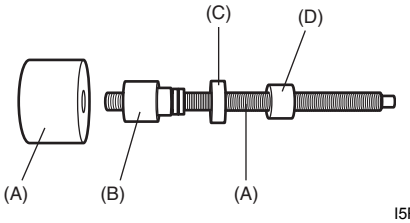

I5RW0A320048-01

12) Apply gear oil to drive bevel pinion bearings, install special tools with bearings to differential carrier as shown in figure.

Special tool
(A): 09922–76140
(B): 09922–76420
(C): 09922–76330
(D): 09922–76340
(E): 09922–76150
(F): 09922–76530

NOTE

This installation requires no spacer or oil seal.

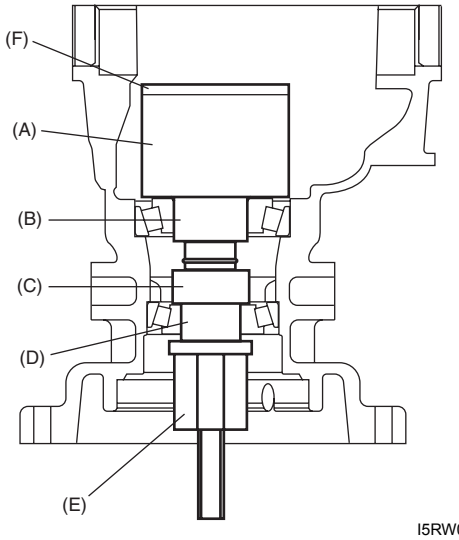

I5RW0A320049-01

13) Tighten bevel pinion nut (special tool) (1) so that specified bearing preload is obtained.

NOTE

Before taking measurement, check for rotation by hand more than 15 revolutions.

Pinion bearing preload (at 50 r/min)
: 1.3 – 2.6 N·m (13.0 – 26.0 kgf-cm, 11.3 – 22.6 lb-in.)

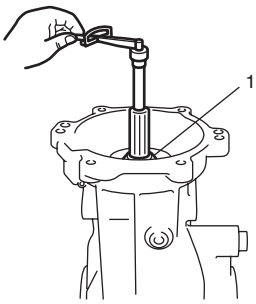

I5RW0A320050-01

14) Set dial gauge to bevel pinion mounting dummy and make 0 (zero) adjustment on surface plate.

NOTE

- **When setting dial gauge to mounting dummy, tighten screw lightly. Be careful not to overtighten it, which will cause damage to dial gauge.**
- **With dial gauge set, turn dummy back and forth by hand a couple of times and attain accurate 0 (zero) adjustment.**
- **It is desirable that short pointer indicates beyond 2 mm when long one is at 0 (zero).**

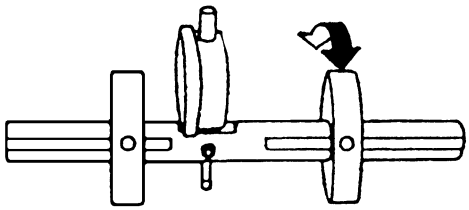

I5RW0A320051-01

15) Place zero-adjusted mounting dummy (1) and dial gauge set on pinion dummy (2) and take measurement between zero position and extended dial gauge measuring tip.

NOTE

- **Repeat turning back and forth of dummy and measure distance as far as top surface of pinion dummy accurately.**
- **When dial gauge measuring tip extends from 0 (zero) position, pointer turns counterclockwise.**

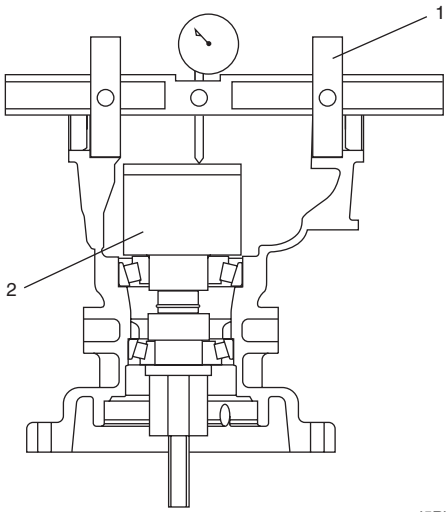

I5RW0A320052-01

16) Necessary adjusting shim thickness is the same value as measured value by dial gauge.

Necessary shim thickness "e" = Dial gauge measured value "c"

17) Select adjusting shim(s) (2) closest to obtained value from among the following available sizes and put it in place and then press-fit rear bearing (1) to bevel pinion (3).

Available shim thickness
0.30, 0.60, 0.63, 0.66, 0.69, 0.72, 0.75, 0.78, 0.81, 0.84 and 0.87 mm (0.012, 0.023, 0.024, 0.026, 0.027, 0.028, 0.030, 0.031, 0.032, 0.033 and 0.034 in.)

Special tool
(D): 09925–18011

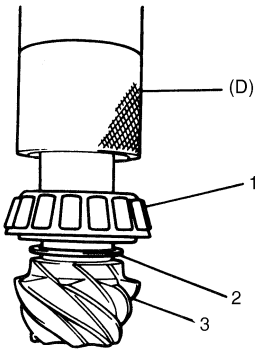

I3RH01322055-01

18) With new pinion spacer (2) inserted as shown in figure, install front bearing (1) to differential carrier (3).

NOTE

Apply differential oil to front and rear bearings.

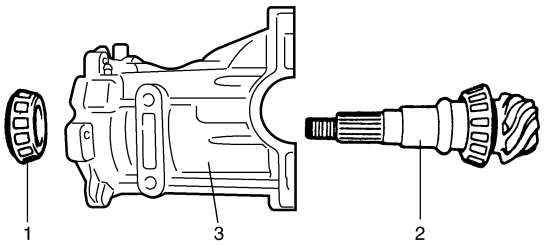

I5RW0A320053-01

19) Using special tool and plastic hammer, drive oil seal (2) into differential carrier (1) as shown in figure. Then apply grease to oil seal lip.

NOTE

Install oil seal horizontally to surface of differential carrier.

"A": Grease 99000–25010 (SUZUKI Super Grease A)

Distance between differential carrier and oil seal "a"
: 0.5 – 1.5 mm (0.02 – 0.06 in.)

Special tool
(A): 09913–85210

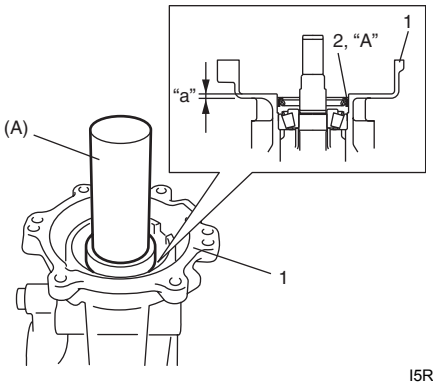

I5RW0A320054-02

20) Tighten bevel pinion nut (1) gradually with special tool to specified torque while turning bevel pinion. Set bearing preload of bevel pinion to specification.

NOTE

- **Before taking measurement with torque wrench, check for smooth rotation with turning bevel pinion 15 revolutions or more by hand.**
- **Be sure to tighten gradually and carefully till specified pinion bearing preload is obtained. Turning back overtightened flange nuts should be avoided.**
- **Measure pinion bearing preload while turning bevel pinion about 50 rpm.**
- **Write down measured value of bevel pinion bearing preload for differential side bearing shim adjustment.**

Special tool
(A): 09927–27910

Tightening torque
Bevel pinion nut: 230 – 340 N·m (23.0 – 34.0 kgf-m, 166.5 – 246.0 lb-ft)

Bevel pinion bearing preload (Bevel pinion rotational torque)
: 1.3 – 2.6 N·m (13.0 – 26.0 kgf-cm, 11.3 – 22.6 lb-in.)

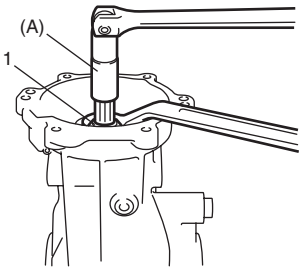

I5RW0A320055-03

21) Install differential case assembly, bearing outer races, removed shim and differential cover, temporarily.

NOTE

- **Used left and right outer races are not interchangeable.**
- **When measuring bevel pinion bearing preload, install differential cover with sealant not applied.**

22) Select differential side bearing shim so that bevel pinion bearing preload may be specified value.

NOTE

Select shims so that thickness of right side shims and left side shims become almost even.

Bevel pinion bearing preload
Preload measured in Step 20) + 0.3 – 0.7 N·m (3 – 7 kgf-cm, 2.6 – 6.0 lb-in.)

Available shim thickness
0.45, 2.30, 2.35, 2.40, 2.45, 2.50, 2.55, 2.60, 2.65 and 2.70 mm (0.017, 0.090, 0.092, 0.094, 0.096, 0.098, 0.100, 0.102, 0.104 and 0.106 in.)

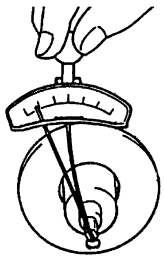

I5RW0A320056-01

23) Remove differential cover.

24) To measure bevel gear backlash, set dial gauge at right angle to bevel gear tooth, fix drive bevel pinion and read dial gauge while moving bevel gear.
If bevel gear backlash is out of specification, repeat Step 22).

NOTE

- **Be sure to apply measuring tip of dial gauge at right angles to convex side of tooth.**
- **Measure at least 4 points on drive bevel gear periphery.**

Drive bevel gear back lash
0.1 – 0.2 mm (0.004 – 0.008 in.)

Special tool
(A): 09900–20607
(B): 09900–20701

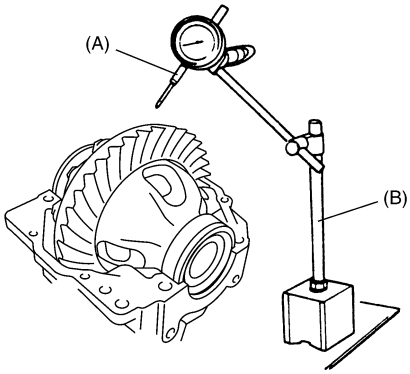

I5RW0A320057-01

25) As final step, check gear tooth contact as follows.
   a) After cleaning 10 drive bevel gear teeth, paint them with gear marking compound evenly by using brush (1) or sponge etc.
   b) Turn gear to bring its painted part in mesh with drive bevel pinion and turn it back and forth by hand to repeat their contact.
   c) Bring painted part up and check contact pattern, referring to the following table. If contact pattern is not normal, readjust or replace as necessary according to instruction in the table.

NOTE

Be careful not to turn drive bevel gear more than one full revolution, for it will hinder accurate check.

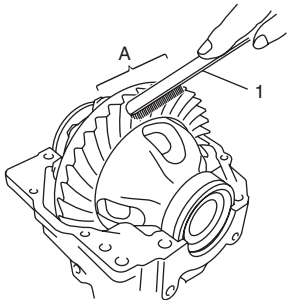

I5JB0A321040-02

A:	Paint gear marking compound evenly

Tooth Contact Pattern	Diagnosis and Remedy	
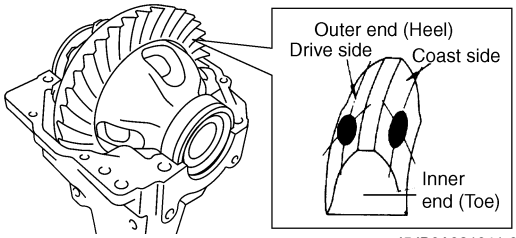 I5JB0A321041-05	Normal	
 IYSQ01321072-01	High Contact Pinion is positioned too far from the center of drive bevel gear (1). • Increase thickness of pinion (2) height adjusting shim and position pinion closer to gear center. • Adjust drive bevel gear backlash to specification.	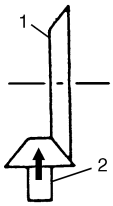 IYSQ01321073-01
 IYSQ01321074-01	Low Contact Pinion is positioned too close to the center of drive bevel gear (1). • Decrease thickness of pinion (2) height adjusting shim and position pinion farther from gear center. • Adjust drive bevel gear backlash to specification.	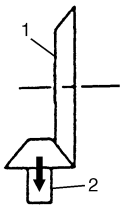 IYSQ01321076-01
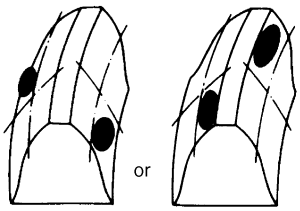 IYSQ01321077-01	If adjustment is impossible, replace differential carrier.	
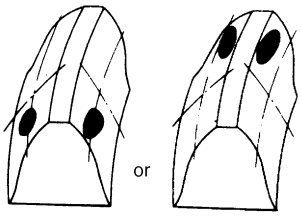 IYSQ01321078-01	• Check seating of bevel gear or differential case. (Check bevel gear for runout.) • If adjustment is impossible, replace drive bevel gear and pinion set or differential carrier.	
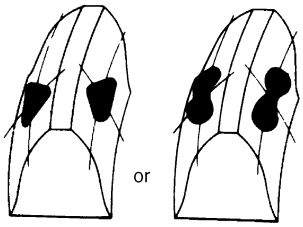 IYSQ01321079-01	Replace drive bevel gear and pinion set or differential case.	

26) Clean mating surface of differential carrier (1) and differential cover, apply sealant to carrier as shown in figure by such amount that its section is 1.5 mm (0.059 in.) in diameter, mate differential cover with differential carrier, and then tighten bolts to specified torque.

"A": Sealant 99000–31260 (SUZUKI Bond No.1217G)

Tightening torque
Differential cover bolt: 23 N·m (2.3 kgf-m, 17.0 lb-ft)

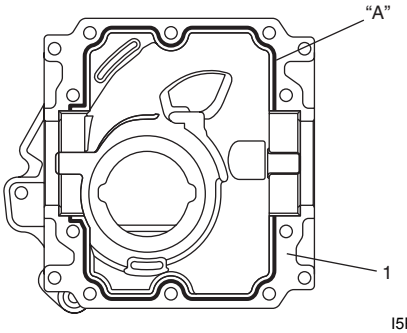

I5RW0A320058-02

27) Assemble coupling case as follows.

a) Install bearing using special tool and hydraulic press.

Special tool
(A): 09913–75830

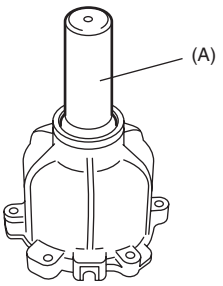

I5RW0A320059-02

b) Install snap ring using snap ring pliers.

c) Apply grease to oil seal lip, install oil seal (2) to coupling case (1) using special tool as shown in figure.

NOTE

Install oil seal horizontally to surface of coupling case.

"A": Grease 99000–25010 (SUZUKI Super Grease A)

Distance between case and oil seal "a"
: 1.5 – 2.5 mm (0.06 – 0.10 in.)

Special tool
(A): 09913–75810

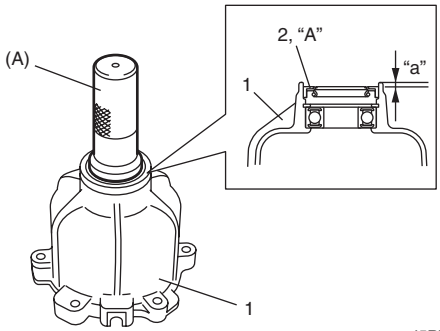

I5RW0A320060-02

28) Install spacer (1) to coupling assembly (2) as shown in figure.

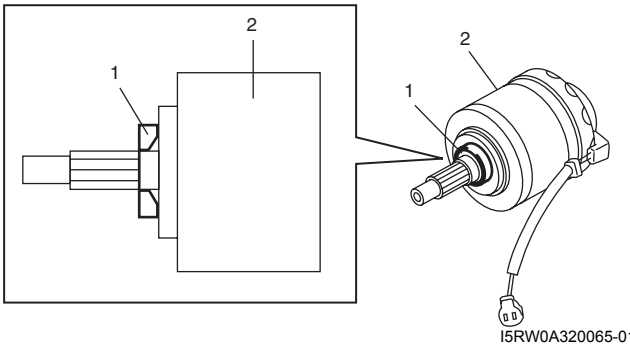

I5RW0A320065-01

29) Install grommet of coupling harness into groove of coupling case and then install coupling assembly by using hydraulic press.

30) Install companion flange to pinion, and then hold companion flange with special tool and tighten flange nut.

Tightening torque
Flange nut: 110 N·m (11.0 kgf-m, 79.5 lb-ft)

Special tool
(A): 09930–40113

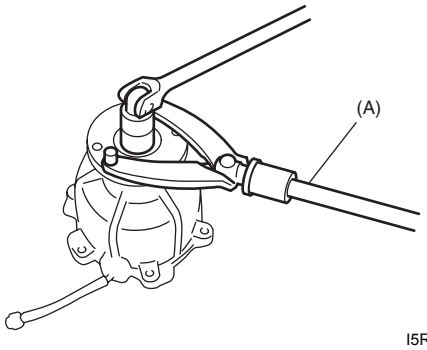

I5RW0A320061-01

31) Clean mating surface of differential carrier (1) and coupling case (2), apply sealant to carrier as shown in figure by such amount that its section is 1.5 mm (0.059 in.) in diameter, mate coupling case with differential carrier as shown in figure, and then tighten bolts to specified torque.

"A": Sealant 99000–31260 (SUZUKI Bond No.1217G)

Tightening torque
Coupling case bolt (a): 23 N·m (2.3 kgf-m, 17.0 lb-ft)

NOTE

Install coupling pin (3) by fitting it to groove (4) of coupling case.

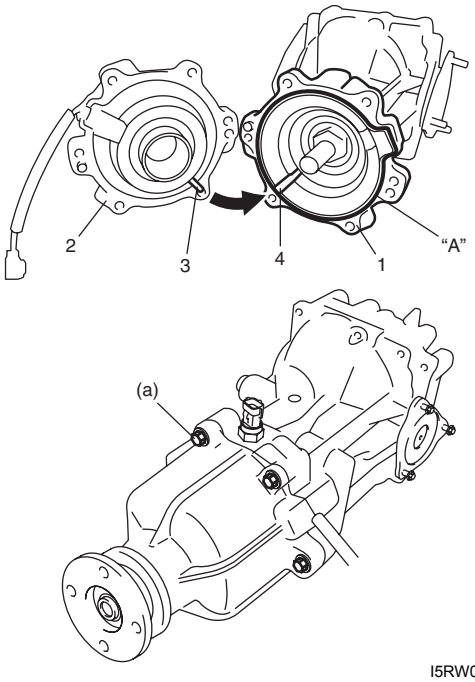

I5RW0A320062-04

32) Apply grease to oil seal lip, and then install oil seals (1) to rear differential (2) using special tool as shown in figure.

NOTE

Install oil seal horizontally to surface of rear differential case.

"A": Grease 99000–25010 (SUZUKI Super Grease A)

Distance between rear differential and oil seal "a"
: 1.0 – 2.0 mm (0.04 – 0.08 in.)

Special tool
(A): 09913–75810

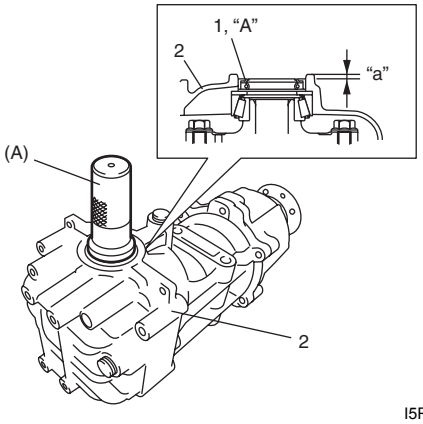

I5RW0A320063-02

33) Install drive shaft flange.

34) Install rear mounting bracket to rear differential referring to "Front Mounting Arm and/or Rear Mounting Bracket Assembly Removal and Installation".

Rear Differential Inspection

S7RW0A3206015

- Check companion flange for wear or damage.
- Check bearings for wear or discoloration.
- Check differential carrier for cracks.
- Check drive bevel pinion and bevel gear for wear or cracks.
- Check side gears, pinion gears and pinion shaft for wear or damage.
- Check side gear spline for wear or damage.

Specifications

Tightening Torque Specifications

S7RW0A3207001

Fastening part	Tightening torque			Note
	N·m	kgf-m	lb-ft	
Differential oil level / filler plug	23	2.3	17.0	☞ / ☞
Differential oil drain plug	23	2.3	17.0	☞
Coupling air temperature sensor	18	1.8	13.0	☞
Bevel gear bolt	73	7.3	52.0	☞
Bevel pinion nut	230 – 340	23.0 – 34.0	166.5 – 246.0	☞
Differential cover bolt	23	2.3	17.0	☞
Flange nut	110	11.0	79.5	☞
Coupling case bolt	23	2.3	17.0	☞

NOTE

The specified tightening torque is also described in the following.
“Rear Differential Mountings Components”
“Rear Differential Components”

Reference:
For the tightening torque of fastener not specified in this section, refer to “Fasteners Information in Section 0A”.

Special Tools and Equipment

Recommended Service Material

S7RW0A3208001

Material	SUZUKI recommended product or Specification		Note
Grease	SUZUKI Super Grease A	P/No.: 99000–25010	☞ / ☞ / ☞
Sealant	SUZUKI Bond No.1217G	P/No.: 99000–31260	☞ / ☞ / ☞ / ☞ / ☞

NOTE

Required service material is also described in the following.
“Rear Differential Components”

Special Tool

S7RW0A3208002

09900–20607 Dial gauge ☞ 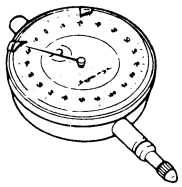	09900–20701 Magnetic stand ☞ 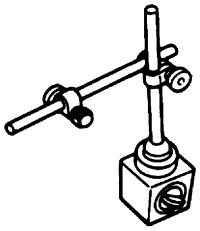
09912–34510 Case separator ☞ / ☞ 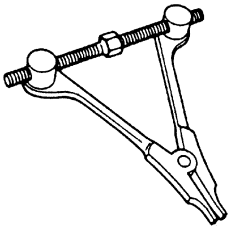	09913–50121 Oil seal remover ☞ / ☞ 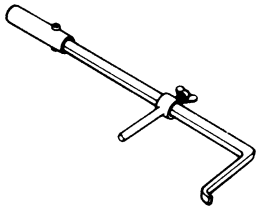
09913–60910 Bearing and gear puller (40-60mm) ☞ 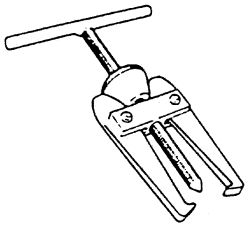	09913–65135 Bearing puller ☞ 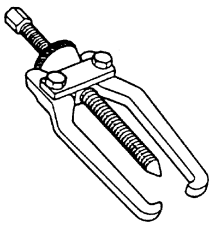
09913–70123 Bearing installing tool ☞ 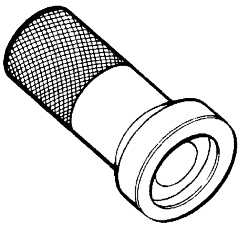	09913–75510 Bearing installer ☞ 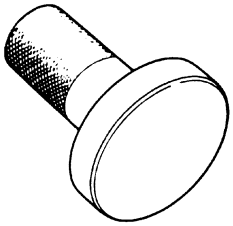
09913–75810 Bearing installer ☞ / ☞ 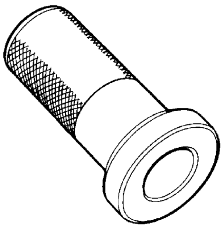	09913–75830 Steering pinion bush installer ☞ / ☞ 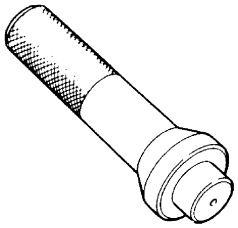
09913–80113 Bearing installer ☞ / ☞	09913–85210 Bearing installer ☞ / ☞ / ☞ 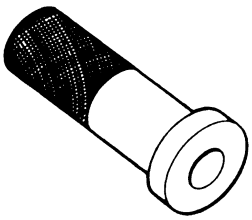
09922–76120 Mounting dummy shaft ☞ / ☞ 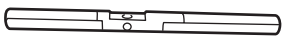	09922–76140 Bevel pinion shaft ☞ / ☞ / ☞ 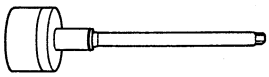

09922–76150 Bevel pinion nut ☞ / ☞	09922–76250 Bevel gear dummy ☞ / ☞
09922–76330 Bevel pinion rear collar ☞ / ☞ / ☞	09922–76340 Bevel pinion rear collar ☞ / ☞ / ☞
09922–76420 Bevel pinion front collar ☞ / ☞ / ☞	09922–76530 Bevel pinion gauge block ☞ / ☞
09922–85811 Spring pin remover (4.5 mm) ☞ / ☞	09925–18011 Transmission gear, bush and bearing installer ☞
09925–88210 Bearing puller attachment ☞ / ☞	09926–48010 Universal joint assembling tool ☞ / ☞
09927–27910 Holder, bevel pinion ☞ / ☞	09930–40113 Flywheel rotor holder ☞ / ☞
09951–26020 Bush remover & installer support ☞ / ☞	SUZUKI scan tool — This kit includes following items. 1. Tech 2, 2. PCMCIA card, 3. DLC cable, 4. SAE 16/19 adapter, 5. Cigarette cable, 6. DLC loop back adapter, 7. Battery power cable, 8. RS232 cable, 9. RS232 adapter, 10. RS232 loop back connector, 11. Storage case, 12. ☞ / ☞

Transfer

General Description

Transfer Description

S7RW0A3301001

The transfer is mounted on transaxle case by fastening bolt with reduction drive gear in transfer and differential case in transaxle coupled by involute spline. Driving force from transaxle is transmitted to propeller shaft through reduction drive gear, reduction driven gear and bevel gear of transfer. As bevel gears, which change the direction of driving torque axis to the direction of the angle with 90 degrees, hypoid gears are provided. Hypoid gears have an advantage of preventing gear noise, at the same time, they require accurate adjustment of tooth contact and backlash.

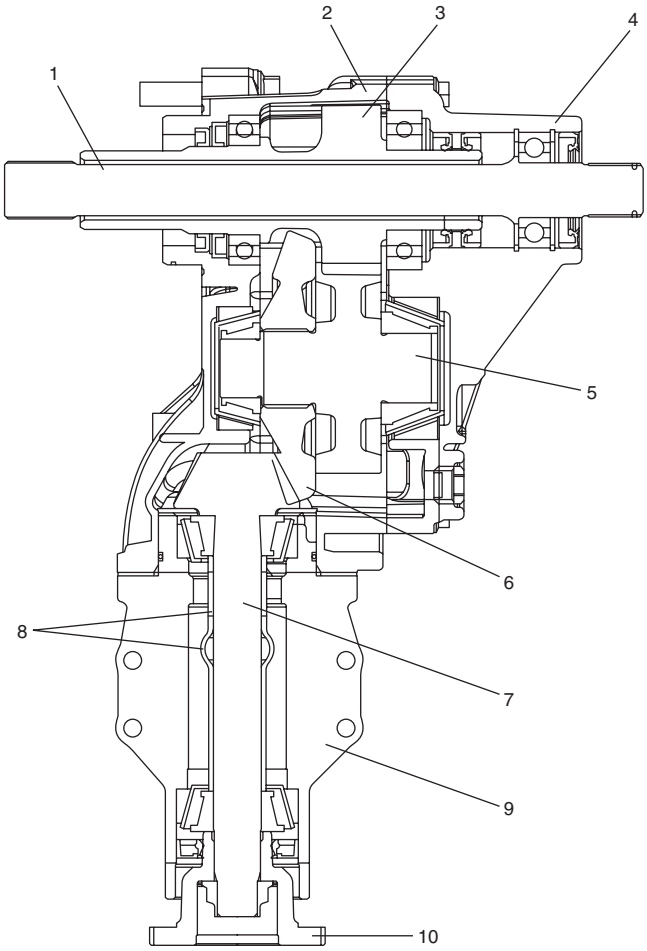

I5RW0A330001-01

1. Intermediate shaft	5. Reduction driven gear	9. Transfer output retainer
2. Left case	6. Bevel gear	10. Transfer output flange
3. Reduction drive gear	7. Bevel pinion	
4. Right case	8. Spacer	

Diagnostic Information and Procedures

Transfer Symptom Diagnosis

S7RW0A3304001

Condition	Possible cause	Correction / Reference Item
Noise	Inadequate or insufficient lubricant	*Replenish.*
	Damaged or worn bearing(s)	*Replace.*
	Damaged or worn gear(s)	*Replace.*
	Preload of taper roller bearing is reduced	*Adjust.*

Repair Instructions

Transfer Oil Level Check

S7RW0A3306001

1) Lift up vehicle and check oil leakage. Repair leaky point, if any.
2) Remove oil level / filler plug (1) and check oil contamination and oil level is lower end of oil level / filler plug hole (2).
   If oil is excessive dirty or insufficient, replace oil or pour specified oil up to plug hole.
3) Apply sealant to thread of level / filler plug, and then tighten it to specified torque.

   "A": Sealant 99000–31260 (SUZUKI Bond No.1217G)

   Tightening torque
   Transfer oil level / filler plug (a): 23 N·m (2.3 kgf-m, 17.0 lb-ft)

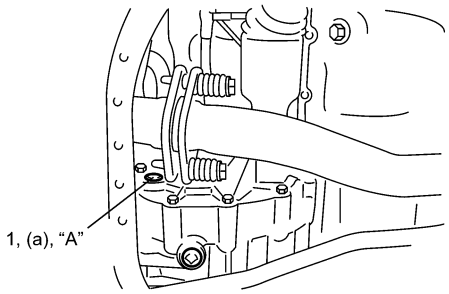

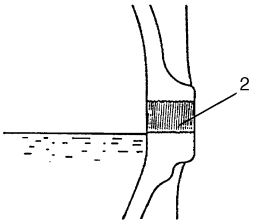

I5RW0A330002-01

Transfer Oil Change

S7RW0A3306002

1) Before changing or inspecting oil, be sure to stop engine and lift vehicle horizontally.
2) Check leakage.
   If leakage exists, correct it.

   NOTE

   Whenever vehicle is hoisted for any other service work than oil change, also be sure to check for oil leakage.

3) Remove oil filler plug (2).
4) Remove drain plug (1), and drain oil.
5) Apply sealant to thread of drain plug (1), and tighten it to specified torque.

   "A": Sealant 99000–31260 (SUZUKI Bond No.1217G)

   Tightening torque
   Transfer oil drain plug (a): 23 N·m (2.3 kgf-m, 17.0 lb-ft)

6) Pour new specified oil up to lower end of oil level / filler plug hole (3).

   NOTE

   It is highly recommended to use API GL-5 80W-90 gear oil.

   Transfer oil specification
   : API GL-5 (For SAE classification, refer to viscosity chart [A] in figure.)

   Transfer oil capacity
   Reference: 0.6 liters (1.2/1.0 US/Imp. pt)

7) Apply sealant to thread of level / filler plug, and then tighten it to specified torque.

   "A": Sealant 99000–31260 (SUZUKI Bond No.1217G)

   Tightening torque
   Transfer oil level / filler plug (b): 23 N·m (2.3 kgf-m, 17.0 lb-ft)

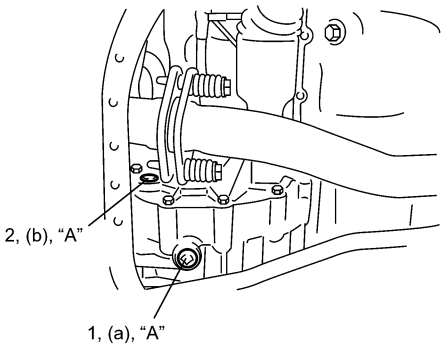

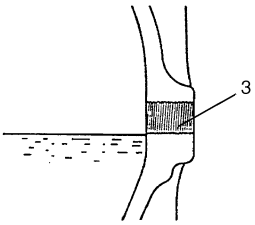

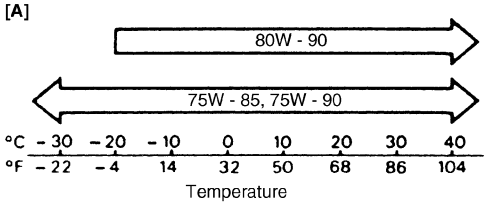

I5RW0A330003-01

Transfer Dismounting and Remounting

S7RW0A3306003

Dismounting

1) Disconnect negative cable at battery.
2) Drain transaxle oil and transfer oil.
3) Remove drive shafts assembly referring to “Front Drive Shaft Assembly Removal and Installation: Front in Section 3A”.
4) Remove exhaust No.1, No.2 and center pipes referring to “Exhaust Pipe and Muffler Removal and Installation in Section 1K”.
5) Remove suspension frame, engine front mounting member and mounting member referring to “Front Suspension Frame, Stabilizer Bar and/or Bush Removal and Installation in Section 2B” and “Engine Assembly Removal and Installation in Section 1D”.
6) Remove engine rear mounting bracket (1) and stiffeners (2) from transfer.

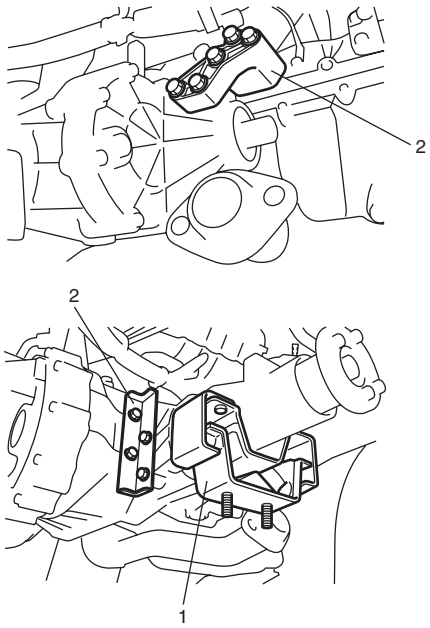

I5RW0A330004-01

7) Support transfer with transmission jack.
8) Remove transfer to transaxle bolts (1), and then lower transfer assembly (2).

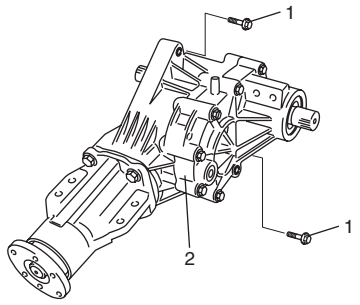

I5RW0A330005-02

Remounting

Reverse dismounting procedure for remounting of transfer, noting the following points.

- Apply grease to left case (1) as shown in figure.

  “A”: Grease 99000–25010 (SUZUKI Super Grease A)

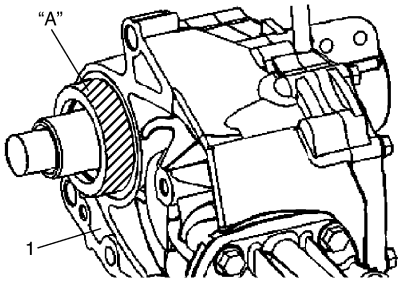

I5RW0C330001-01

- Tighten engine rear mounting bracket nut to specified torque referring to “Engine Mountings Components in Section 1D”.
- Tighten bolts to specified torque as follows.

  Tightening torque
  Stiffener No.1 bolt and No.2 bolt (a): 55 N·m (5.5 kgf-m, 40.0 lb-ft)
  Transfer to transaxle bolt (b): 98 N·m (9.8 kgf-m, 71.0 lb-ft)

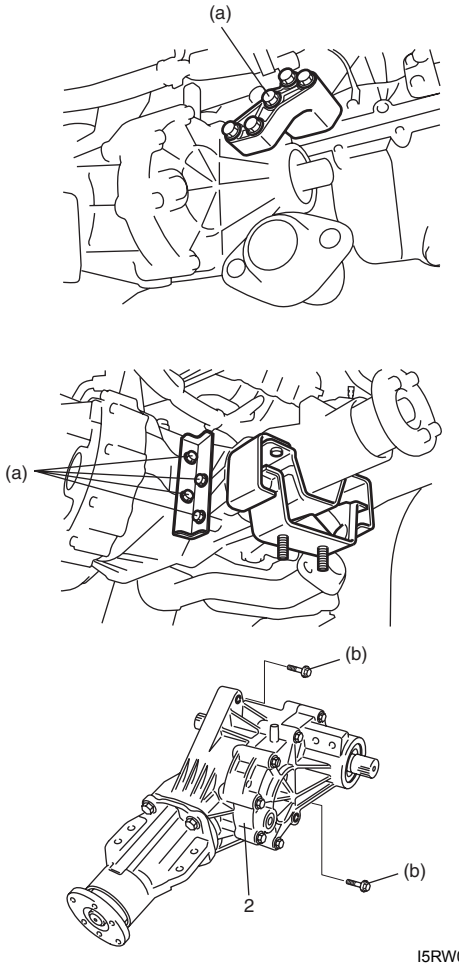

I5RW0A330006-02

- Pour transaxle oil and transfer oil referring to “Manual Transaxle Oil Change in Section 5B” and “Transfer Oil Change”.

Transfer Assembly Components

S7RW0A3306004

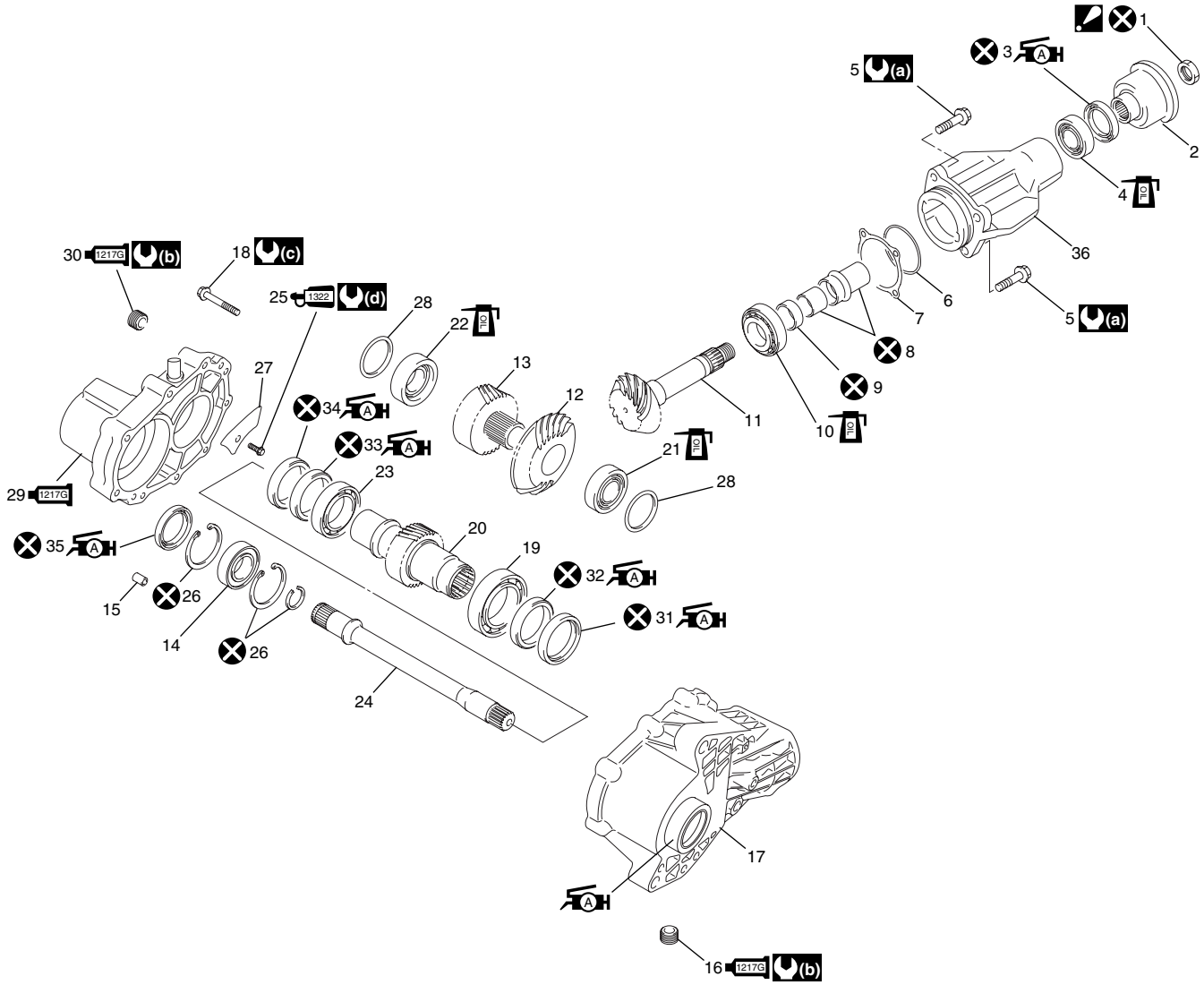

I5RW0A330007-05

1. Transfer output flange nut : After tightening nut so as rotational torque of bevel pinion to be in specified value, caulk nut securely.	15. Dowel pin	1217G 29. Transfer right case : Apply sealant 99000-31260 to mating surface with right case.
2. Transfer output flange	1217G 16. Oil drain plug : Apply sealant 99000-31260 to thread part.	1217G 30. Oil level / filler plug : Apply sealant 99000-31260 to thread part.
A H 3. Oil seal : Apply grease 99000-25010 to oil seal lip.	A H 17. Transfer left case : Apply grease 99000-25010 to left case.	A H 31. Left case oil seal No.1 : Apply grease 99000-25010 to oil seal lip.
4. Pinion shaft rear taper roller bearing	18. Transfer case bolt	A H 32. Left case oil seal No.2 : Apply grease 99000-25010 to oil seal lip.
5. Transfer output retainer bolt	19. Reduction drive gear left bearing	A H 33. Right case oil seal No.3 : Apply grease 99000-25010 to oil seal lip.
A H 6. O-ring : Apply grease 99000-25010 to all around surface.	20. Reduction drive gear	A H 34. Right case oil seal No.2 : Apply grease 99000-25010 to oil seal lip.
7. Shim	21. Reduction driven gear left taper roller bearing	A H 35. Right case oil seal No.1 : Apply grease 99000-25010 to oil seal lip.
8. Spacer	22. Reduction driven gear right taper roller bearing	36. Transfer output retainer

9. Pump seal	23. Reduction drive gear right bearing	(a) : 55 N·m (5.5 kgf-m, 40.0 lb-ft)
10. Pinion shaft front taper roller bearing	24. Intermediate shaft	(b) : 21 N·m (2.1 kgf-m, 15.5 lb-ft)
11. Bevel pinion	1322 25. Oil protect plate bolt : Apply thread lock cement 99000-32110 to thread part.	(c) : 23 N·m (2.3 kgf-m, 17.0 lb-ft)
12. Bevel gear	26. Snap ring	(d) : 9 N·m (0.9 kgf-m, 6.5 lb-ft)
13. Reduction driven gear	27. Oil protect plate	⊗ : Do not reuse.
14. Intermediate shaft bearing	28. Shim	Oil : Apply transfer oil.

Transfer Assembly Disassembly and Reassembly

S7RW0A3306005

Disassembly

NOTE

It is possible to disassemble transfer assembly without removing intermediate shaft with Step 1) to 4) performed if not necessary.

1) Remove right case oil seal No.1 (1) from transfer right case using special tool.

Special tool
: 09913–50121

2) Remove snap ring (2) by using snap ring pliers.
3) Remove intermediate shaft (4) with intermediate shaft bearing (3) from transfer assembly.
4) Remove intermediate shaft bearing (3) from intermediate shaft (4) by using bearing puller and hydraulic press.

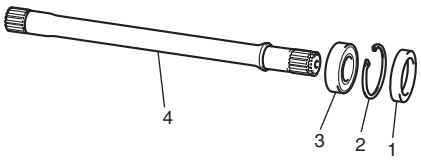

I5RW0A330008-01

5) Remove transfer output retainer assembly (1) and shim (3) by removing retainer bolts (2).
6) Remove transfer case bolts (4).
7) Separate transfer right case (5) from transfer left case (6) by using special tool.

Special tool
(A): 09912–34510

8) Remove reduction drive gear assembly (7) and reduction driven gear assembly (9).
9) Remove shim (10) and bearing outer races (8).

NOTE

When it is difficult to remove bearing outer races from cases, remove them with special tool.

Special tool
(B): 09944–96011

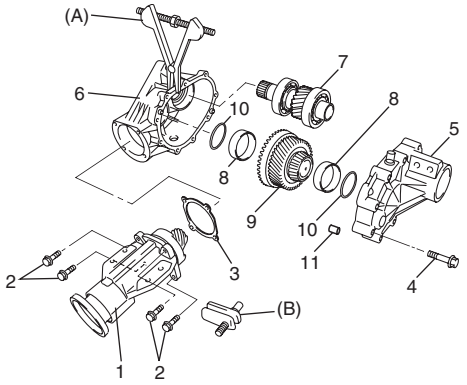

I5RW0A330009-03

11. Dowel pin

Reassembly

1) Select appropriate shim as follows.
   a) Measure distance “a” between taper roller bearing outer races of reduction driven gear assembly (1).
   b) Measure depth “b” of left case (2) and “c” of right case (3).
   c) Obtain adjusting shim thickness by the following equation.

Necessary shim thickness	=	Depth “b”	+	Depth “c”	–	Distance “a”	+	0.1 mm (0.004 in.)

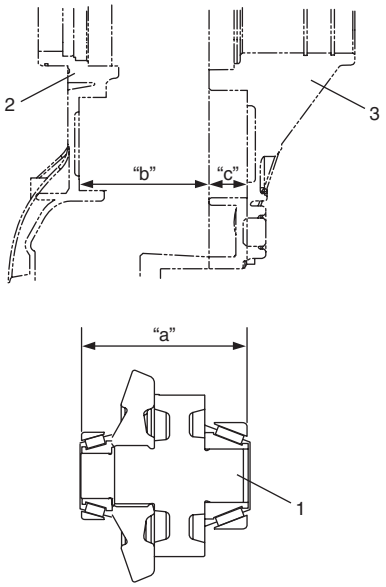

I5RW0A330010-01

d) Select a shim which is close to half thickness of the calculated value (necessary shim thickness) from among the available shims to install it between bearing and case at each of right and left sides.
For example:
Measure distance “a” is 110.75 mm (4.360 in.).
Measure depth “b” is 85.8 mm (3.378 in.).
Measure depth “c” is 26.55 mm (1.045 in.).
Necessary shim thickness = 85.8 mm (3.378 in.) + 26.55 mm (1.045 in.) – 110.75 mm (4.360 in.) + 0.1 mm (0.004 in.) = 1.7 mm (0.067 in.)
1.7 mm (0.067 in.) ÷ 2 = 0.85 mm (0.033 in.)
Calculated thickness of new shim = 0.85 mm (0.033 in.)

Available reduction driven gear shim thickness
0.60, 0.65, 0.70, 0.75, 0.80, 0.85, 0.90, 0.95, 1.00 and 1.05 mm (0.024, 0.026, 0.028, 0.030, 0.031, 0.033, 0.035, 0.037, 0.039 and 0.041 in.)

2) Clean mating surface of right and left cases, and apply sealant to right case (1) as shown in figure by such amount that its section is 1.2 mm (0.047 in.) in diameter.

“A”: Sealant 99000–31260 (SUZUKI Bond No.1217G)

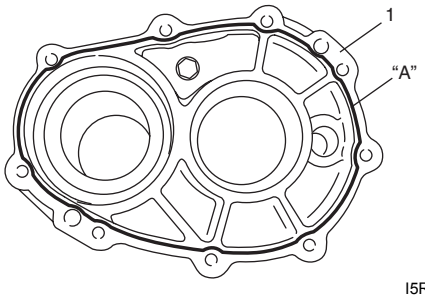

I5RW0A330011-01

3) Assemble the following parts in right and left cases by reversing disassembling procedure.
- Reduction drive gear assembly (1)
- Reduction driven gear assembly (3)
- Bearing outer races (2)
- Reduction driven gear shims (5)
- Dowel pin (6)

4) Tighten transfer case bolts (4) to specified torque.

Tightening torque
Transfer case bolt (a): 23 N·m (2.3 kgf-m, 17.0 lb-ft)

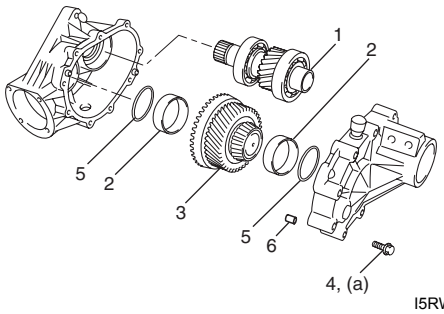

I5RW0A330012-02

5) Select bevel pinion shim (3) referring to step 1) of “Reassembly” under “Transfer Output Retainer Assembly Disassembly and Reassembly”.
6) Inspect tooth contact according to “Bevel Gear Tooth Contact Inspection”.
7) Install transfer output retainer assembly (2) with bevel pinion shim (3) to transfer left case (4) by tightening retainer bolt (1) to specified torque.

Tightening torque
Transfer output retainer bolt (a): 55 N·m (5.5 kgf-m, 40.0 lb-ft)

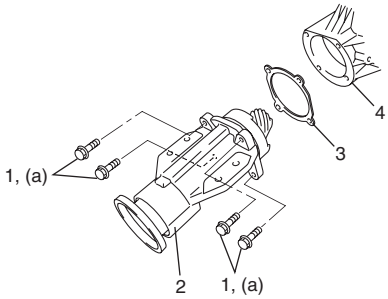

I5RW0A330013-02

8) Install bolt to bolt hole of flange (2), set dial gauge measuring tip at right angles to bolt (1) as shown in figure. Holding reduction driven gear by hand, take measurement backlash of pinion and bevel gear.

NOTE

If backlash exceeds specification given below, adjust it by changing thickness ratio of shims assembled in right and left cases in Step 3).

Special tool
(A): 09900–20607
(B): 09900–20701

Bevel pinion & bevel gear backlash
: 0.1 – 0.2 mm (0.0039 – 0.0078 in.)

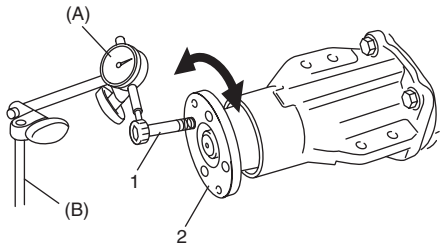

I5RW0A330014-02

9) Install intermediate shaft bearing (1) to intermediate shaft (2) by using special tool.

Special tool
(A): 09913–84510

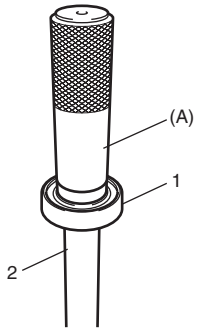

I5RW0A330015-01

10) Install intermediate shaft (2) with bearing (3) in transfer.

11) Install new snap ring (1) to transfer right case by using snap ring pliers.

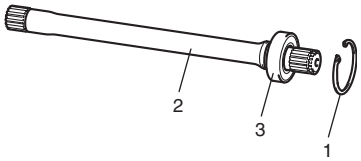

I5RW0A330016-02

12) Apply grease to new right case oil seal No.1 lip.

"A": Grease 99000–25010 (SUZUKI Super Grease A)

13) Drive right case oil seal No.1 (1) in transfer right case (2) by using special tool and hammer.

Special tool
(A): 09925–15410

<u>Intermediate output oil seal installing depth</u>
"a": 1.0 – 1.5 mm (0.04 – 0.06 in.)

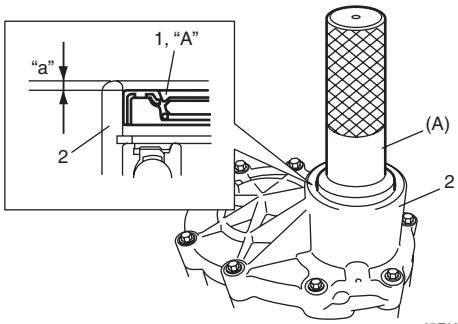

I5RW0A330017-02

Reduction Drive Gear Assembly Disassembly and Reassembly

S7RW0A3306006

Disassembly

Remove bearings (1) from reduction drive gear (2) using special tool, bearing puller (3) and hydraulic press (4).

Special tool
(A): 09913–85230

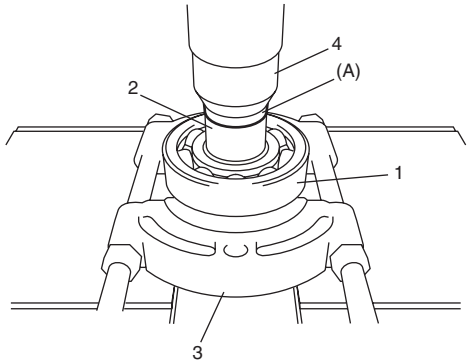

I5RW0A330018-01

Reassembly

1) Clean all components thoroughly, inspect them for any abnormality and replace with new one as necessary.

2) Install bearings (1) to reduction drive gear (2) using special tool, bearing puller (3) and hydraulic press (4).

Special tool
(A): 09913–85230

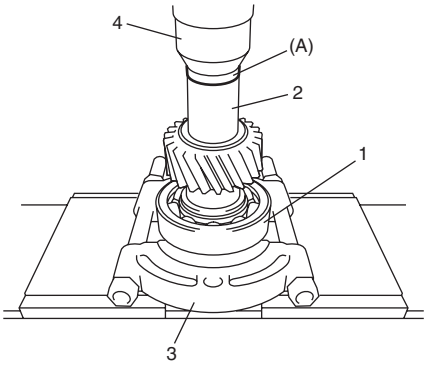

I5RW0A330019-01

Reduction Driven Gear Assembly Disassembly and Reassembly

S7RW0A3306007

Disassembly

1) Remove left bearing (1) and bevel gear (2) using special tool, bearing puller (3) and hydraulic press (4).

Special tool
(A): 09925–98221

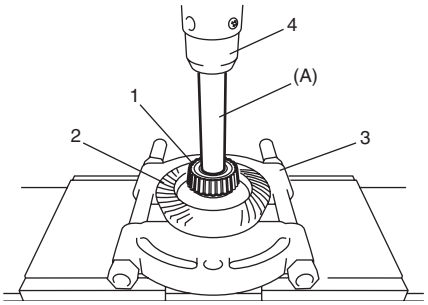

I5RW0A330020-02

2) In order to remove right bearing (1) from reduction driven gear (2), grind with a grinder (3) one part “a” of bearing as illustrated till it becomes thin.

⚠ CAUTION

Be careful not to grind too far not to damage reduction driven gear.

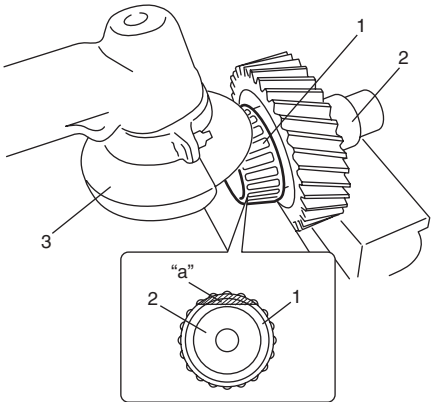

I5RW0A330021-01

3) Break with a chisel (1) the thin ground bearing (2), and it can be removed.

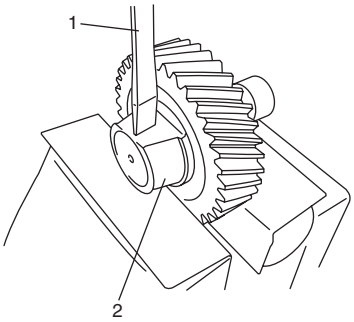

I5RW0A330022-01

Reassembly

⚠ CAUTION

- **Bevel gear and pinion must be replaced as a set when either replacement becomes necessary.**
- **When replacing taper roller bearing, replace as inner race and outer race assembly.**

1) Install right bearing (1) to reduction driven gear (2) using special tools and hydraulic press.

Special tool
(A): 09924–74510
(B): 09925–16310

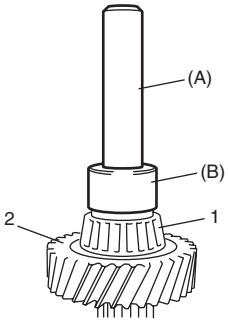

I5RW0A330023-01

2) Install bevel gear (1) to reduction driven gear (2) using special tools and hydraulic press.

Special tool
(A): 09924–07710
(B): 09924–84510–005
(C): 09925–15410

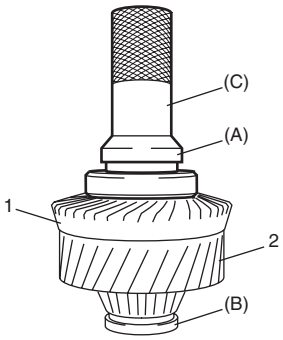

I5RW0A330024-01

3) Install left bearing (1) to reduction driven gear (2) using special tools and hydraulic press.

Special tool
(A): 09913–84510
(B): 09924–84510–005

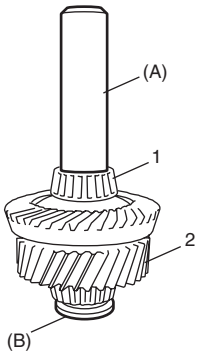

I5RW0A330025-02

Transfer Right Case and Left Case Disassembly and Reassembly

S7RW0A3306008

Disassembly

1) Remove oil seals from right case (1) using special tool, if necessary.

Special tool
(A): 09925–15410

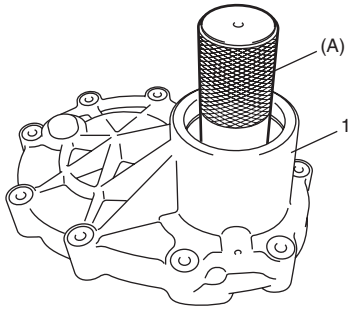

I5RW0A330026-01

2) Remove oil plate (1) from right case (2), if necessary.

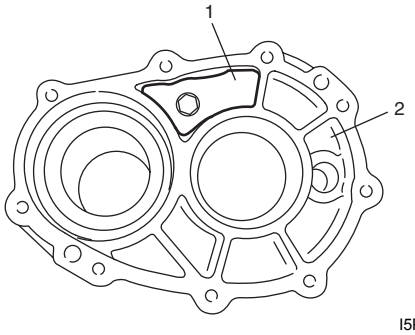

I5RW0A330027-01

3) Remove oil seals from left case using flat end rod or the like, if necessary.

Reassembly

1) When installing oil seal No.2 (1) and No.3 (2) to right case (3) using special tool, use care so that oil seals in proper direction and position as shown in figure. Apply grease to oil seal lip.

Special tool
(A): 09925–15410

"A": Grease 99000–25010 (SUZUKI Super Grease A)

<u>Oil seals installing depth</u>
"a": 23.5 – 24.0 mm (0.925 – 0.945 in.)
"b": 38.0 – 39.0 mm (1.496 – 1.535 in.)

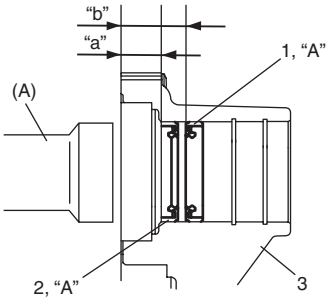

I5RW0A330028-01

2) Install oil plate to right case.

Tightening torque
Oil plate bolt: 9 N·m (0.9 kgf-m, 6.5 lb-ft)

3) When installing new oil seal No.1 (1) and No.2 (2) to left case (3) using special tool, use care so that oil seals in proper direction as shown in figure. Apply grease to oil seal lip.

Special tool
(A): 09913–85210 (For oil seal No.1)
(A): 09944–88210 (For oil seal No.2)

"A": Grease 99000–25010 (SUZUKI Super Grease A)

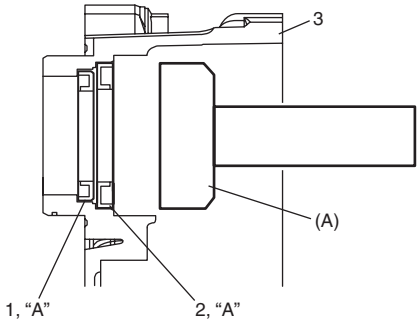

I5RW0A330029-01

Transfer Output Retainer Assembly Disassembly and Reassembly

S7RW0A3306009

Disassembly

1) Uncaulk transfer output flange nut.
2) Remove transfer output flange nut while holding flange (1) by using special tool.

   Special tool
   (A): 09930–40113

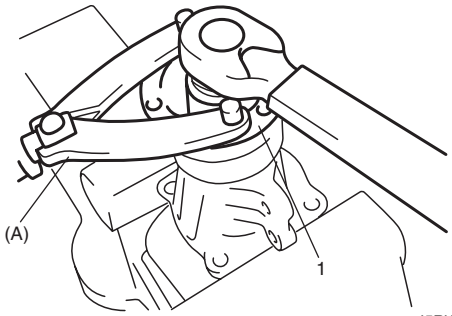

I5RW0A330030-01

3) Remove transfer output flange (1) by bearing puller (2).

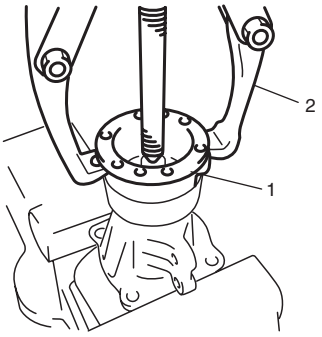

I5RW0A330031-01

4) Drive out bevel pinion (1) from transfer output retainer by tapping it with plastic hammer (2).

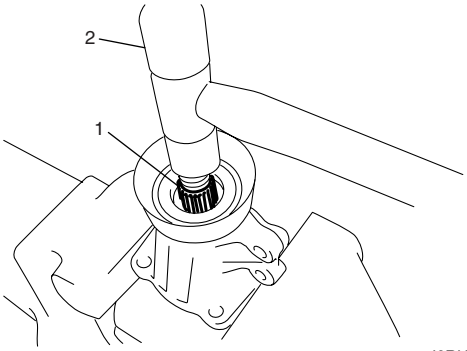

I3RH01332019-01

5) Drive out front taper roller bearing (1) from bevel pinion (3) by using bearing puller (2) and hydraulic press.

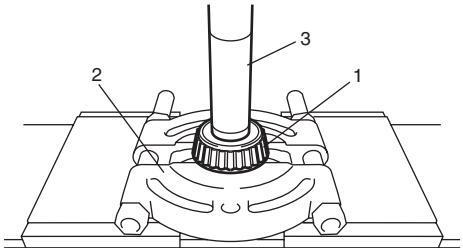

I5RW0A330032-01

6) Remove oil seal (1) by using special tool.

   Special tool
   (A): 09913–50121

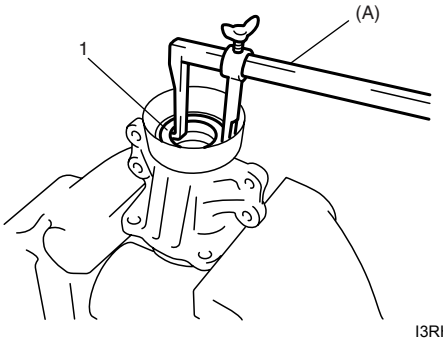

I3RH01332020-01

7) Remove rear taper roller bearing (1), pump seal (3) and spacers (2).

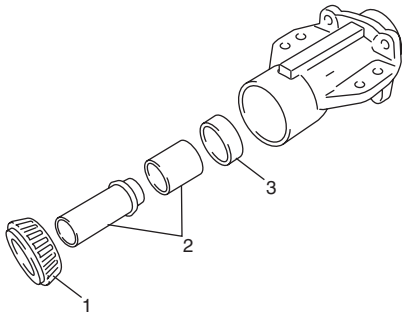

I5RW0A330033-03

8) Drive out outer races (2) (front and rear) by using brass bar (1).

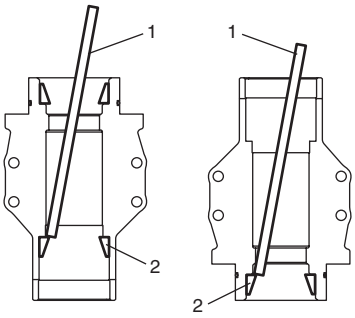

I5RW0A330034-01

Reassembly

⚠ CAUTION

- **Bevel gear and pinion must be replaced as a set when either replacement becomes necessary.**
- **When replacing taper roller bearing, replace as inner race and outer race assembly.**

1) To mesh bevel gears correctly, it is prerequired to install bevel pinion to transfer output retainer properly by using adjusting shim (bevel pinion shim) as follows.
   a) Install front taper roller bearing (1) to bevel pinion dummy (special tools).

      Special tool
      (A): 09922–76140
      (B): 09922–76430

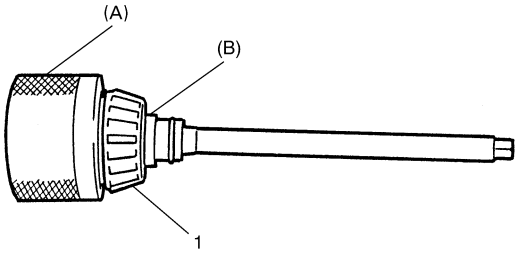

I3RH01332053-01

   b) Install bevel pinion dummy (1), rear taper roller bearing (2) and special tools to transfer output retainer (3).

      Special tool
      (A): 09922–76140
      (B): 09922–76430
      (C): 09922–76340
      (D): 09922–76150

NOTE

This installation requires no spacer or oil seal.

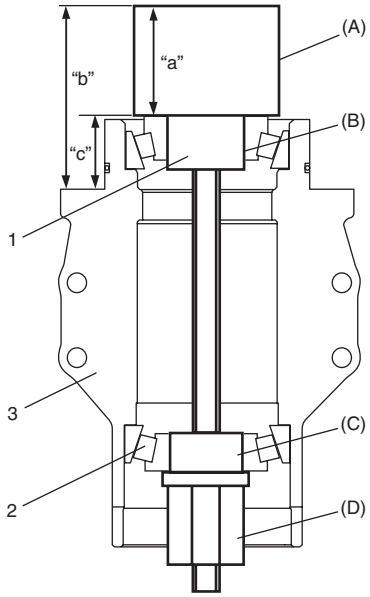

I5RW0A330035-01

"a":	Pinion dummy height 40 mm (1.575 in.)
"b":	Height from retainer installation face to top surface of pinion dummy
"c":	Distance from retainer installation face to end face of bearing race

c) Tighten bevel pinion nut (special tool) so that specified bearing preload is obtained.

NOTE

Before taking measurement, check for rotation by hand more than 15 revolutions.

Tightening torque
Rotational torque of bevel pinion (Bearing preload): 0.50 – 1.30 N·m (0.05 – 0.13 kgf-m, 0.35 – 0.95 lb-ft)

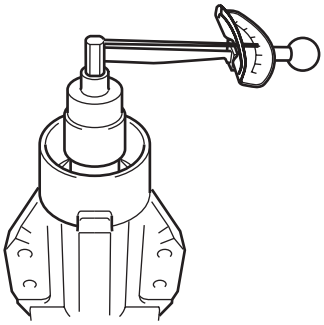

I5RW0A330036-02

d) Measure height “b” in figure by using vernier caliper.
Calculate “c” by using measured value.

Distance “c”	=	Height “b”	–	Height “a” 40 mm (1.575 in.)

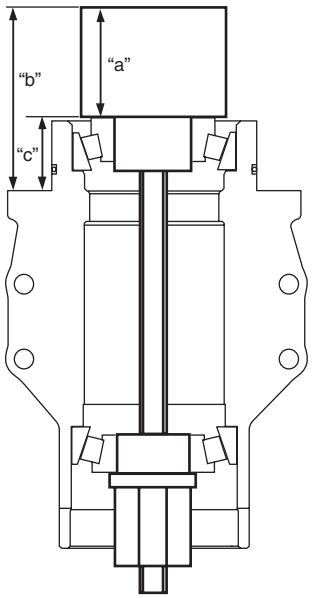

I5RW0A330046-01

e) Obtain adjusting shim thickness by the following equation.

Necessary shim thickness “f”	=	Distance “c”	+	Distance “d” 74.0 mm (2.913 in.)	–	Distance “e” 101.95 mm (4.014 in.)

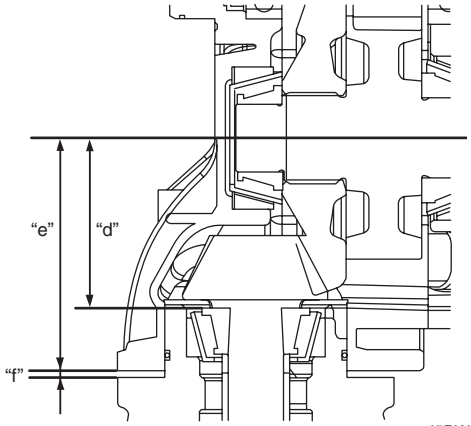

I5RW0A330037-01

“d”:	Pinion shaft mounting distance 74.0 mm (2.913 in.)
“e”:	Distance from end face of left case to axis of reduction driven gear 101.95 mm (4.014 in.)
“f”:	Necessary shim thickness

f) Select a shim closest to the calculated value (necessary shim thickness) from among the available shims or combine shims to become closest to calculated value.
For example:
Measure distance “b” is 69.95 mm (2.754 in.).
“c” = 69.95 mm (2.754 in.) – 40.0 mm (1.757 in.) = 29.95 mm (1.179 in.)
“f” = 29.95 mm (1.179 in.) + 74.0 mm (2.913 in.) – 101.95 mm (4.014 in.) = 2.0 mm (0.079 in.)
Calculated thickness of new shim = 2.0 mm (0.079 in.)

Available bevel pinion shim thickness
0.30, 1.85, 1.88, 1.91, 1.94, 1.97, 2.00, 2.03, 2.06, 2.09, 2.12 and 2.15 mm (0.012, 0.072, 0.074, 0.075, 0.076, 0.077, 0.078, 0.079, 0.081, 0.082, 0.083 and 0.084 in.)

2) Press-fit outer races (front and rear) by using special tool and hydraulic press.

Special tool
(A): 09913–75520

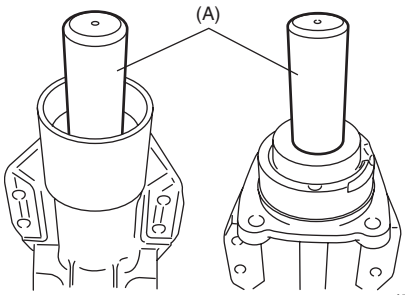

I5RW0A330038-01

3) Press-fit front taper roller bearing (1) by using special tool and hydraulic press.

Special tool
(A): 09925–18011

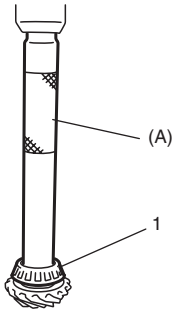

I5RW0A330039-01

4) Install bevel pinion with new pinion shaft spacers (1) and new pump seal (2) to transfer output retainer (3).

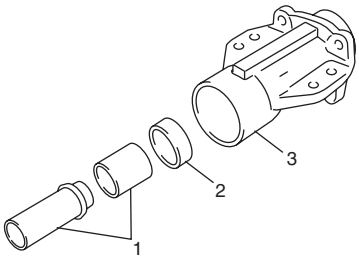

I5RW0A330040-02

5) Drive in rear taper roller bearing by using special tool and tapping lightly with plastic hammer.

Special tool
(A): 09913–84510

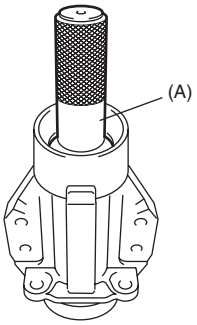

I5RW0A330041-02

6) Apply grease to new oil seal lip.

"A": Grease 99000–25010 (SUZUKI Super Grease A)

7) Drive in oil seal (1) by using special tools and hammer.

Special tool
(A): 09940–54910
(B): 09913–76010

<u>Transfer output flange oil seal installing depth</u>
"a": 21.0 – 22.0 mm (0.82 – 0.86 in.)

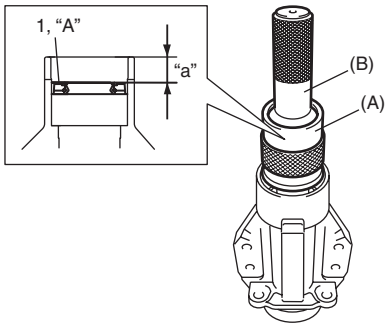

I5RW0A330042-02

8) Install transfer output flange (1) by tapping with plastic hammer and tighten transfer output flange nut gradually so as rotational torque of bevel pinion to be in specified value.

NOTE

- **If rotational torque of bevel pinion exceeds specification given in the following, replace pinion shaft spacers and tighten flange nut.**
- **Before taking measurement of rotational torque, rotate pinion over ten rounds in advance.**

Bevel pinion bearing preload
: 0.5 – 1.3 N·m (0.05 – 0.13 kgf-m, 0.35 – 0.95 lb-ft)

Special tool
(A): 09930–40113

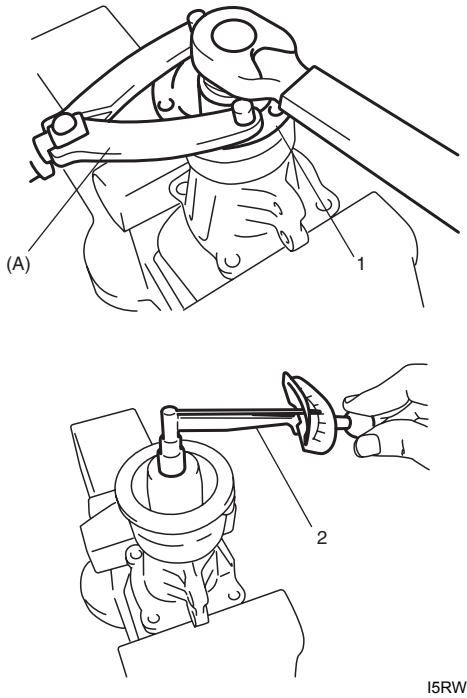

I5RW0A330043-01

2. Torque wrench

9) Caulk transfer output flange nut (1).

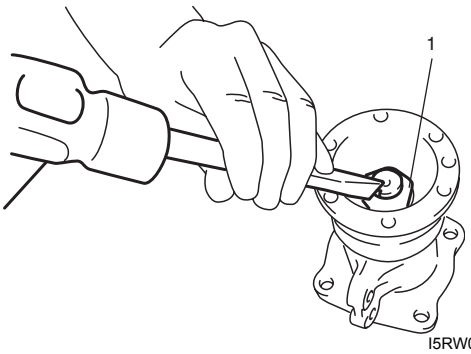

I5RW0A330044-01

Transfer Assembly Inspection

S7RW0A3306010

- Check each bearing for smooth rotation, wear or discoloration
  If found abnormal, replace.
- Check oil seal for leakage and its lip for excessive hardness
  If either is found, replace.
- Check transfer case for cracks.
- Check bevel pinion and bevel gears for wear or cracks.

Bevel Gear Tooth Contact Inspection

S7RW0A3306011

1) After cleaning tooth surface of bevel gear (1), paint them with gear marking compound evenly by using brush or sponge etc.

NOTE

When applying red lead paste to teeth, be sure to paint tooth surfaces uniformly. The paste must not be too dry or too fluid.

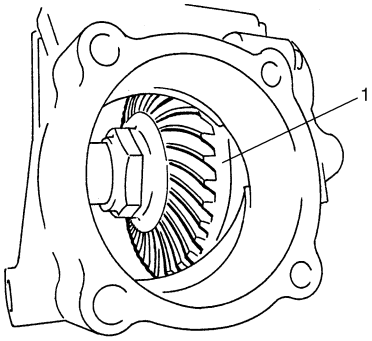

I3RH01332043-01

2) Install transfer output retainer assembly referring to “Transfer Assembly Disassembly and Reassembly”.
3) Turn transfer output flange clockwise and counterclockwise repeatedly, and remove transfer output retainer assembly and bevel gear shims from transfer assembly.

4) Bring painted part up and check contact pattern referring to the following chart. If contact pattern is not normal, readjust or replace as necessary according to instruction in chart.

NOTE

- **Be careful not to turn bevel gear more than one full revolution, for it will hinder accurate check.**
- **If bevel gear back lash and bevel pinion shims are adjusted properly, correct tooth contact should be provided.**
  If correct tooth contact is not provided even when they are adjusted properly, however, there may be an abnormal condition in worn tooth, transfer case or retainer. Check each component and replace as necessary.

Gear tooth contact table

Tooth contact pattern	Diagnosis and remedy
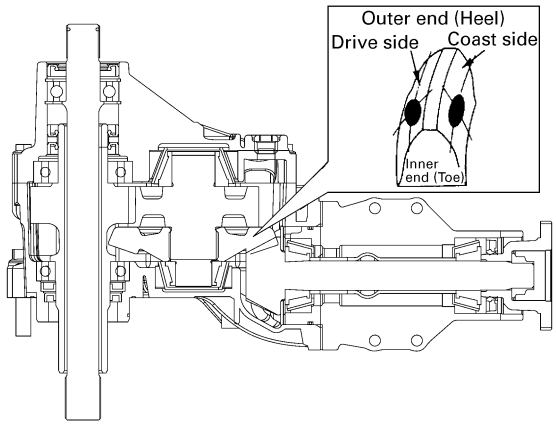 I5RW0A330045-01	Normal
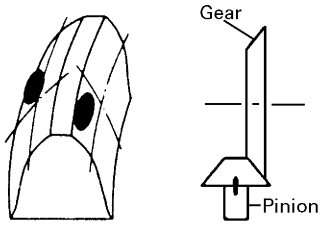 I3RH01332045-01	**High contact** Pinion is positioned too far from the center of drive bevel gear. • Decrease thickness of bevel pinion shim and position pinion closer to gear center. • Adjust drive bevel gear backlash to specification.
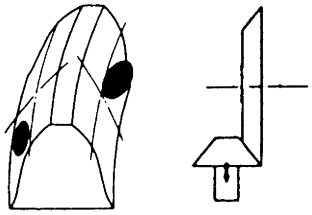 I3RH01332046-01	**Low contact** Pinion is positioned too close to the center of drive bevel gear. • Increase thickness of bevel pinion shim and position pinion farther from gear center. • Adjust drive bevel gear backlash to specification.
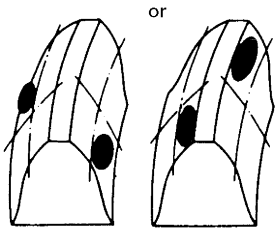 I3RH01332047-01	These contact patterns indicate that the “offset” of reduction driven gear is too much or too little. The remedy is to change the division of the bevel gear shim(s).

Tooth contact pattern	Diagnosis and remedy
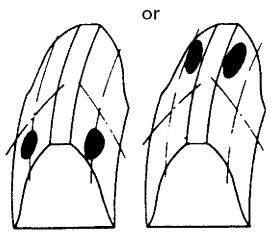 I3RH01332048-01	These contact patterns, located on toe or heel on both drive and coast sides, mean that 1) both pinion and gear are defective, 2) retainer is not true, or 3) gear is not properly seated on transfer case. The remedy is to replace the defective member.
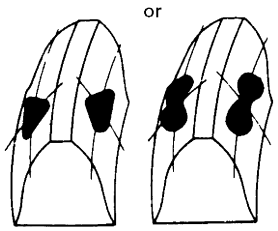 I3RH01332049-01	Irregular patterns: If the pattern is not oval, it means that bevel gear is defective. High or low spots on tooth surfaces or on the seat of bevel gear are the cause of irregular patterns appearing on some teeth. The remedy is to replace the pinion and gear set and, if the seat is defective, so is transfer case.

Specifications

Tightening Torque Specifications

S7RW0A3307001

Fastening part	Tightening torque			Note
	N·m	kgf-m	lb-ft	
Transfer oil level / filler plug	23	2.3	17.0	☞ / ☞
Transfer oil drain plug	23	2.3	17.0	☞
Stiffener No.1 bolt and No.2 bolt	55	5.5	40.0	☞
Transfer to transaxle bolt	98	9.8	71.0	☞
Transfer case bolt	23	2.3	17.0	☞
Transfer output retainer bolt	55	5.5	40.0	☞
Oil plate bolt	9	0.9	6.5	☞
Rotational torque of bevel pinion (Bearing preload)	0.50 – 1.30	0.05 – 0.13	0.35 – 0.95	☞

NOTE

The specified tightening torque is also described in the following.
“Transfer Assembly Components”

Reference:
For the tightening torque of fastener not specified in this section, refer to “Fasteners Information in Section 0A”.

Special Tools and Equipment

Recommended Service Material

S7RW0A3308001

Material	SUZUKI recommended product or Specification		Note
Grease	SUZUKI Super Grease A	P/No.: 99000–25010	☞ / ☞ / ☞ / ☞ / ☞
Sealant	SUZUKI Bond No.1217G	P/No.: 99000–31260	☞ / ☞ / ☞ / ☞

NOTE

Required service material is also described in the following.
“Transfer Assembly Components”

Special Tool

S7RW0A3308002

09900–20607 Dial gauge ☞ 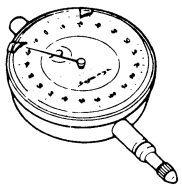	09900–20701 Magnetic stand ☞ 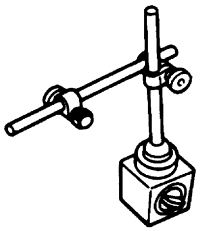
09912–34510 Case separator ☞ 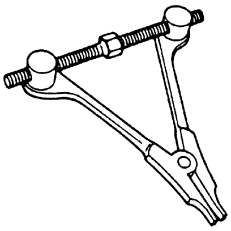	09913–50121 Oil seal remover ☞ / ☞ 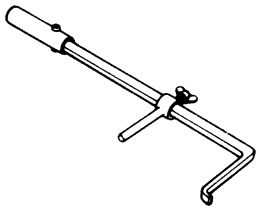
09913–75520 Bearing installer ☞ 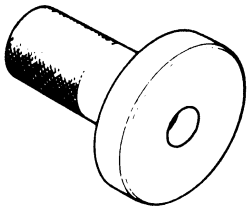	09913–76010 Bearing installer ☞ 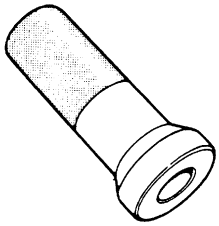
09913–84510 Bearing installer ☞ / ☞ / ☞ 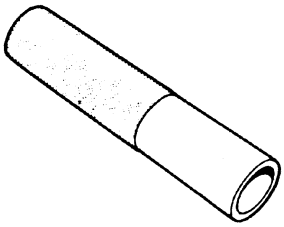	09913–85210 Bearing installer ☞ 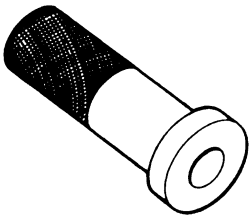
09913–85230 Bearing remover tool ☞ / ☞ 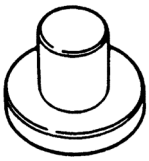	09922–76140 Bevel pinion shaft ☞ / ☞ 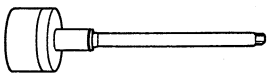
09922–76150 Bevel pinion nut ☞ 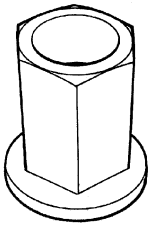	09922–76340 Bevel pinion rear collar ☞ 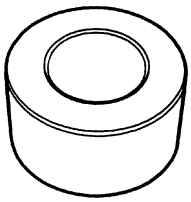

09922–76430 Bevel pinion front collar ☞ / ☞ 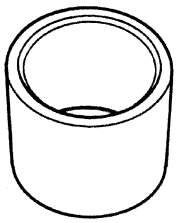	09924–07710 Synchronizer hub installer ☞ 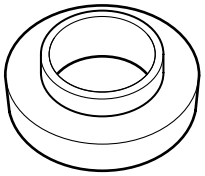
09924–74510 Bearing and oil seal handle ☞ 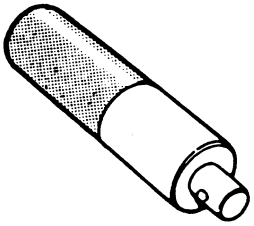	09924–84510–005 Bearing installer attachment (D) ☞ / ☞ 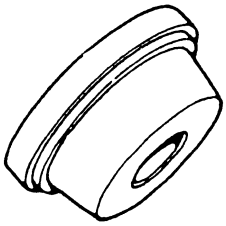
09925–15410 Oil seal installer ☞ / ☞ / ☞ / ☞ 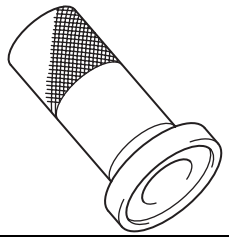	09925–16310 Bearing installer ☞ 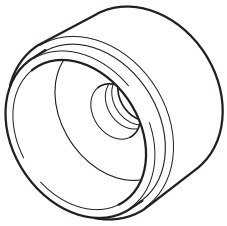
09925–18011 Transmission gear, bush and bearing installer ☞ 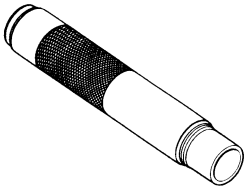	09925–98221 Bearing installer ☞ 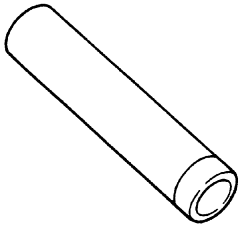
09930–40113 Flywheel rotor holder ☞ / ☞ 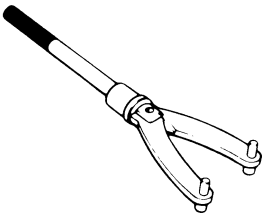	09940–54910 Front fork oil seal install driver ☞ 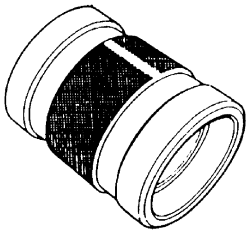
09944–88210 Bearing housing installer ☞ 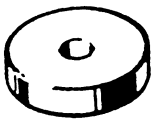	09944–96011 Bearing outer race remover ☞ 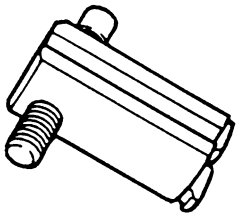

Propeller Shaft

Precautions

Propeller Shaft Caution

S7RW0A3400001

⚠ CAUTION

- **All propeller shaft fasteners are an important attaching part in that it could affect the performance of vital parts and systems, and/or could result in major repair expense. They must be replaced with one of the same part number or with an equivalent part if replacement becomes necessary. Do not use a replacement part of lesser quality or substitute design. Torque values must be used as specified during reassembly to assure proper retention of this part.**
- **Never attempt to heat, quench or straighten any propeller shaft part. Replace it with a new part, or damage to the part may result.**

General Description

Propeller Shaft Construction

S7RW0A3401001

Universal joints and ball joint require no maintenance. They are lubricated for life and can not be lubricated on the vehicle. If a universal joint becomes noisy or worn, it must be replaced.
The propeller shaft is a balanced unit. Handle it carefully so that balance can be maintained.

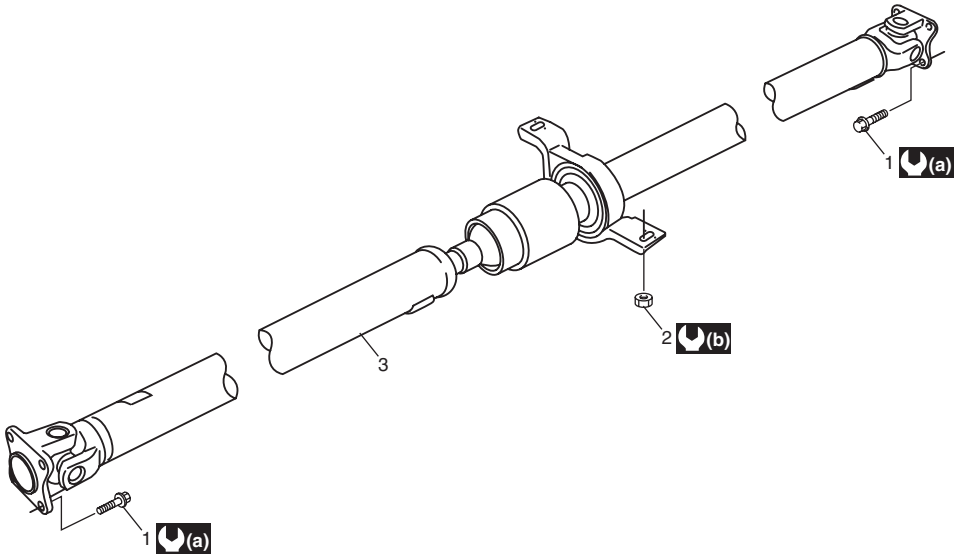

I5RW0A340004-01

1. Propeller shaft flange bolt	(a) : 23 N·m (2.3 kgf-m, 17.0 lb-ft)
2. Center support nut	(b) : 55 N·m (5.5 kgf-m, 40.0 lb-ft)
3. Propeller shaft assembly	

Diagnostic Information and Procedures

Propeller Shaft Symptom Diagnosis

S7RW0A3404001

Condition	Possible cause	Correction / Reference Item
Abnormal noise	Loose propeller shaft flange bolt and/or center support nut	*Tighten propeller shaft flange bolt and/or center support nut.*
	Spider bearing worn out or stuck	*Replace propeller shaft.*
	Wear spider	*Replace propeller shaft.*
Vibration	Deformed propeller shaft	*Replace.*

Repair Instructions

Propeller Shaft Joint Check

S7RW0A3406001

If universal joints and ball joint are suspected of producing chattering or rattling noise, inspect them for wear. For universal joint, check to see if cross spider rattles in yokes are worn down and replace defective propeller shaft assembly with new one.
Noise coming from universal joint and ball joint can be easily distinguished from other noises because rhythm of chattering or rattling is in step with cruising speed. Noise is pronounced particularly on standing start or in coasting condition (when braking effect of engine is showing in the drive line).

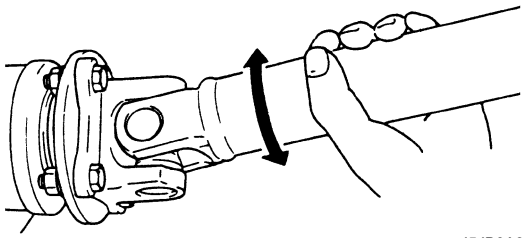

I5JB0A340003-01

Propeller Shaft Assembly Removal and Installation

S7RW0A3406002

Removal

1) Hoist vehicle.
2) Before removing propeller shaft assembly, give match marks (2) on joint flange and propeller shaft as shown.
3) Separate propeller shaft assembly (1) from transfer output flange and rear differential flange.

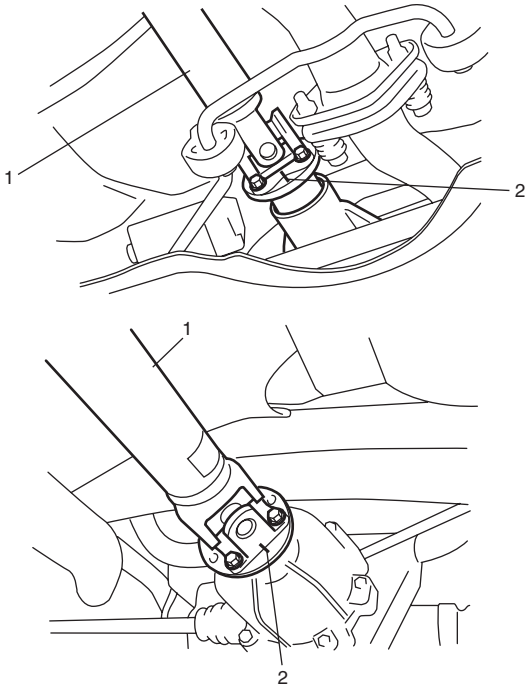

I5RW0A340002-01

4) Remove propeller shaft by removing center support nuts (1).

⚠ CAUTION

Use care not to drop it. Otherwise, vibration may occur during driving.

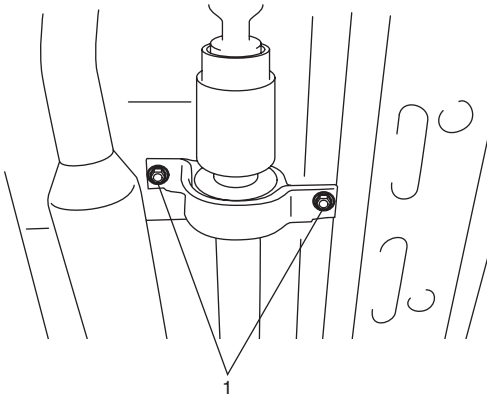

I5RW0A340003-01

Installation

Reverse removal procedure to install propeller shaft, noting the following point.

- When installing propeller shaft, align the match marks (2). Otherwise, vibration may occur during driving.
- Use the following specification to torque each bolt and nut.

Tightening torque
Propeller shaft bolt: 23 N·m (2.3 kgf-m, 17.0 lb-ft)
Center support nut: 55 N·m (5.5 kgf-m, 40.0 lb-ft)

Propeller Shaft Inspection

S7RW0A3406003

1) Check propeller shaft joints for wear, play and damage. If any defect is found, replace.
2) Check propeller shaft center support for biting of foreign matter, crack, abnormal noise and damage. If any defect is found, replace.

Specifications

Tightening Torque Specifications

S7RW0A3407001

Fastening part	Tightening torque			Note
	N·m	kgf-m	lb-ft	
Propeller shaft bolt	23	2.3	17.0	☞
Center support nut	55	5.5	40.0	☞

NOTE

The specified tightening torque is also described in the following.
“Propeller Shaft Construction”

Reference:
For the tightening torque of fastener not specified in this section, refer to “Fasteners Information in Section 0A”.

Section 4

Brakes

CONTENTS

Precautions 4-1
- **Precautions 4-1**
  - Precautions for Brakes 4-1

Brake Control System and Diagnosis ... 4A-1
- **Precautions 4A-1**
  - Precautions on Brake 4A-1
- **General Description 4A-1**
  - Brakes Construction 4A-1
  - Brake Pedal Foot Protection System Construction (If Equipped) 4A-2
- **Diagnostic Information and Procedures 4A-2**
  - Brakes Diagnosis Note 4A-2
  - Brakes Symptom Diagnosis 4A-3
- **Repair Instructions 4A-5**
  - Brake Pedal Components 4A-5
  - Brake Pedal Free Height Inspection 4A-5
  - Brake Pedal Play Inspection 4A-5
  - Excessive Pedal Travel Inspection 4A-6
  - Brake Fluid Level Inspection 4A-6
  - Brake Light Switch Adjustment 4A-7
  - Air Bleeding of Brake System 4A-7
  - Front Brake Hose / Pipe Components 4A-8
  - Front Brake Hose and Pipe Removal and Installation 4A-9
  - Rear Brake Hose / Pipe Components 4A-10
  - Rear Brake Hose and Pipe Removal and Installation 4A-10
  - Brake Hose and Pipe Inspection 4A-10
  - Master Cylinder and Brake Booster Components 4A-11
  - Master Cylinder Reservoir Removal and Installation 4A-12
  - Master Cylinder Removal and Installation 4A-13
  - Master Cylinder Inspection 4A-14
  - Booster Operation Inspection 4A-14
  - Brake Booster Removal and Installation 4A-16
  - Brake Booster Inspection 4A-16
  - Booster Push Clevis Rod Adjustment 4A-16
- **Specifications 4A-17**
  - Tightening Torque Specifications 4A-17
- **Special Tools and Equipment 4A-17**
  - Recommended Service Material 4A-17
  - Special Tool 4A-17

Front Brakes 4B-1
- **Repair Instructions 4B-1**
  - Front Disc Brake Components 4B-1
  - Front Disc Brake Pad On-Vehicle Inspection 4B-2
  - Front Disc Brake Pad Removal and Installation 4B-2
  - Front Disc Brake Pad Inspection 4B-3
  - Front Disc Brake Caliper Removal and Installation 4B-3
  - Front Disc Brake Caliper Disassembly and Assembly 4B-4
  - Front Disc Brake Caliper Check 4B-6
  - Front Brake Disc Removal and Installation 4B-6
  - Front Brake Disc Inspection 4B-7
- **Specifications 4B-8**
  - Tightening Torque Specifications 4B-8
- **Special Tools and Equipment 4B-8**
  - Recommended Service Material 4B-8
  - Special Tool 4B-8

Rear Brakes 4C-1
- **Repair Instructions 4C-1**
  - Rear Drum Brake Components 4C-1
  - Rear Brake Drum Removal and Installation 4C-2
  - Rear Brake Drum and Shoe Inspection 4C-2
  - Rear Brake Shoe On-Vehicle Inspection 4C-3
  - Rear Brake Shoe Removal and Installation 4C-3
  - Rear Brake Adjuster and Shoe Lever Check 4C-4
  - Wheel Cylinder Removal and Installation 4C-4
  - Wheel Cylinder Inspection 4C-5
  - Brake Back Plate Removal and Installation 4C-5
- **Specifications 4C-6**
  - Tightening Torque Specifications 4C-6
- **Special Tools and Equipment 4C-6**
  - Recommended Service Material 4C-6

Parking Brake 4D-1
- **Repair Instructions 4D-1**
  - Parking Brake Cable Components 4D-1
  - Parking Brake Inspection and Adjustment 4D-2
  - Parking Brake Cable Removal and Installation 4D-2
  - Parking Brake Lever Removal and Installation 4D-3
- **Specifications 4D-4**

Tightening Torque Specifications....4D-4

ABS....4E-1

Precautions....4E-1
Precautions in Diagnosing Troubles....4E-1
Precautions in On-Vehicle Service....4E-1
General Description....4E-2
ABS Description....4E-2
ABS Hydraulic Unit / Control Module Assembly Description....4E-3
CAN Communication System Description....4E-3
Schematic and Routing Diagram....4E-4
ABS Schematic....4E-4
ABS Wiring Circuit Diagram....4E-5
Component Location....4E-7
ABS Components Location....4E-7
Diagnostic Information and Procedures....4E-8
ABS Check....4E-8
ABS Warning Light Check....4E-10
EBD Warning Light (Brake Warning Light) Check....4E-10
DTC Check....4E-11
DTC Table....4E-11
DTC Clearance....4E-11
Scan Tool Data....4E-12
ABS Warning Light Does Not Come ON at Ignition Switch ON....4E-13
ABS Warning Light Comes ON Steady....4E-15
EBD Warning Light (Brake Warning Light) Comes ON Steady....4E-16
Serial Data Link Circuit Check....4E-17
DTC C1013: Control Module Mismatch....4E-20
DTC C1015: G Sensor Circuit (4WD Model)....4E-21
DTC 1016: Brake Light Switch....4E-22
DTC C1021 / C1022 / C1025 / C1026 / C1031 / C1032 / C1035 / C1036: Wheel Speed Sensor Circuit / Sensor or Encoder....4E-23
DTC C1033: Wheel Speed Sensor Deviation....4E-25
DTC C1041 / C1042 / C1045 / C1046 / C1051 / C1052 / C1055 / C1056: Inlet / Outlet Solenoid....4E-26
DTC C1057: Power Supply Voltage Too High / Too Low....4E-27
DTC C1061: Pump Motor Circuit....4E-28
DTC C1063: Solenoid Valve Power Supply Driver Circuit....4E-29
DTC C1071: Control Module Internal Defect....4E-30
ABS Hydraulic Unit / Control Module Assembly Power and Ground Circuit Check....4E-30
Repair Instructions....4E-31
ABS Hydraulic Unit Operation Check....4E-31
ABS Hydraulic Unit / Control Module Assembly Components....4E-32
ABS Hydraulic Unit / Control Module Assembly On-Vehicle Inspection....4E-33
ABS Hydraulic Unit / Control Module Assembly Removal and Installation....4E-33
Front and Rear Wheel Speed Sensor On-Vehicle Inspection....4E-34
Front Wheel Speed Sensor Removal and Installation....4E-35
Front and Rear Wheel Speed Sensor Inspection....4E-36
Rear Wheel Speed Sensor Removal and Installation (4WD Model)....4E-36
Rear Wheel Speed Sensor Removal and Installation (2WD Model)....4E-36
Front Wheel Speed Sensor Encoder On-Vehicle Inspection....4E-37
Front Wheel Speed Sensor Encoder Removal and Installation....4E-37
Rear Wheel Speed Sensor Encoder On-Vehicle Inspection....4E-37
Rear Wheel Speed Sensor Encoder Removal and Installation....4E-37
G Sensor Removal and Installation (4WD Model)....4E-38
G Sensor Inspection (4WD Model)....4E-38
Specifications....4E-39
Tightening Torque Specifications....4E-39
Special Tools and Equipment....4E-39
Special Tool....4E-39

Electronic Stability Program....4F-1

Precautions....4F-1
Precautions in Diagnosing Troubles....4F-1
Precautions in On-Vehicle Service....4F-1
Precautions in Hydraulic Unit Operation Check....4F-1
Precautions in Sensor Calibration....4F-1
Precautions in Speedometer Test or Other Tests....4F-2
General Description....4F-2
Electronic Stability Program System Description....4F-2
Electronic Stability Program Construction....4F-3
Components of Electronic Stability Program....4F-3
On-Board Diagnosis System Description....4F-5
Warning Light, Indicator Light Description....4F-6
CAN Communication System Description....4F-7
Schematic and Routing Diagram....4F-8
Electronic Stability Program Schematic....4F-8
Electronic Stability Program Wiring Circuit Diagram....4F-9
Component Location....4F-10
Electronic Stability Program Component Location....4F-10
Diagnostic Information and Procedures....4F-12
Electronic Stability Program Check....4F-12
ESP® Warning Light Check....4F-14
ABS Warning Light Check....4F-14
EBD Warning Light (Brake Warning Light) Check....4F-14
DTC Check....4F-15
DTC Table....4F-15
DTC Clearance....4F-19
Fail-Safe Table....4F-19
Scan Tool Data....4F-21

Visual Inspection 4F-22
ESP® Warning Light Does Not Come ON at Ignition Switch ON 4F-23
ESP® Warning Light Comes ON Steady 4F-24
ABS Warning Light Does Not Come ON at Ignition Switch ON 4F-25
ABS Warning Light Comes ON Steady 4F-25
EBD Warning Light (Brake Warning Light) Comes ON Steady 4F-26
Serial Data Link Circuit Check 4F-28
DTC C1016: Brake Light Switch 4F-30
DTC C1017 / C1023: Lateral G Sensor / Yaw Rate Sensor 4F-32
DTC C1020 / C1028: Master Cylinder Pressure Sensor Power Supply Failure / Circuit 4F-32
DTC C1021 / C1022 / C1025 / C1026 / C1031 / C1032 / C1035 / C1036: Wheel Speed Sensor Circuit / Sensor or Encoder 4F-33
DTC C1024: Steering Angle Sensor 4F-35
DTC C1027: ESP® OFF Switch 4F-35
DTC C1033: Wheel Speed Sensor Deviation ... 4F-36
DTC C1034 / C1039: Yaw Rate / G Sensor Power Supply Failure / Internal Failure 4F-38
DTC C1037: Steering Angle Sensor Power Supply Failure 4F-39
DTC C1038: Steering Angle Sensor Detect Rolling Counter 4F-40
DTC C1040: ESP® Continuous Operation 4F-41
DTC C1041 / C1042 / C1043 / C1044 / C1045 / C1046 / C1051 / C1052 / C1053 / C1054 / C1055 / C1056: Inlet / Outlet / Cut / Suction Solenoid 4F-41
DTC C1057: Power Supply Voltage Too High / Too Low 4F-43
DTC C1061: Pump Motor Circuit 4F-44
DTC C1063: Solenoid Valve Power Supply Driver Circuit 4F-45
DTC C1071: Control Module Internal Defect 4F-46
DTC C1075: Steering Angle Sensor Calibration 4F-46
DTC C1091: CAN Invalid Data from ECM 4F-47
DTC C1096: Yaw Rate / G Sensor Message Counter Error 4F-47
DTC U0073: Control Module Communication Bus Off 4F-48
DTC U0100: Lost Communication with ECM / PCM 4F-48
DTC U0101: Lost Communication with TCM 4F-48
DTC U0114: Lost Communication with Four-Wheel Drive Clutch Control Module 4F-48
DTC U0123: Lost Communication with Yaw Rate Sensor Module 4F-48
DTC U0126: Lost Communication with Steering Angle Sensor 4F-48
ESP® Hydraulic Unit / Control Module Assembly Power and Ground Circuit Check ... 4F-48
Repair Instructions 4F-50
ESP® Hydraulic Unit Operation Check 4F-50
Sensor Calibration 4F-50
ESP® Hydraulic Unit / Control Module Assembly On-Vehicle Inspection 4F-51
ESP® Hydraulic Unit / Control Module Assembly Removal and Installation 4F-51
Front Wheel Speed Sensor On-Vehicle Inspection 4F-53
Front Wheel Speed Sensor Removal and Installation 4F-53
Front Wheel Speed Sensor Inspection 4F-53
Rear Wheel Speed Sensor On-Vehicle Inspection 4F-53
Rear Wheel Speed Sensor Removal and Installation 4F-53
Rear Wheel Speed Sensor Inspection 4F-53
Front Wheel Speed Sensor Encoder On-Vehicle Inspection 4F-53
Front Wheel Speed Sensor Encoder Removal and Installation 4F-53
Rear Wheel Speed Sensor Encoder On-Vehicle Inspection 4F-53
Rear Wheel Speed Sensor Encoder Removal and Installation 4F-53
Master Cylinder Pressure Sensor On-Vehicle Inspection 4F-53
Yaw Rate / G Sensor On-Vehicle Inspection 4F-54
Yaw Rate / G Sensor Removal and Installation 4F-55
Yaw Rate / G Sensor Inspection 4F-56
Steering Angle Sensor On-Vehicle Inspection .. 4F-56
Steering Angle Sensor Removal and Installation 4F-57
Steering Angle Sensor Inspection 4F-57
ESP® OFF Switch Removal and Installation 4F-57
ESP® OFF Switch Inspection 4F-57
Specifications 4F-58
Tightening Torque Specifications 4F-58
Special Tools and Equipment 4F-58
Special Tool 4F-58

Precautions

Precautions

Precautions for Brakes

S7RW0A4000001

Suspension Caution
Refer to “Suspension Caution in Section 00”.

Wheels and Tires Caution
Refer to “Wheels and Tires Caution in Section 00”.

Brake Caution
Refer to “Brake Caution in Section 00”.

ESP® System Precautions
Refer to “Precaution for Vehicle Equipped with ESP® System in Section 00”.

General Precautions
Refer to “General Precautions in Section 00”.

Vehicle Lifting Points
Refer to “Vehicle Lifting Points in Section 0A”.

Fastener Caution
Refer to “Fastener Caution in Section 00”.

Fastener Information
Refer to “Fasteners Information in Section 0A”.

Precaution on CAN Troubleshooting
Refer to “Precaution on CAN Troubleshooting in Section 1A”.

Brake Control System and Diagnosis

Precautions

Precautions on Brake

S7RW0A4100001

Air Bag Warning
Refer to“Air Bag Warning in Section 00”.

Brakes Diagnosis Note
Refer to “Brakes Diagnosis Note”.

General Description

Brakes Construction

S7RW0A4101001

When the foot brake pedal is depressed, hydraulic pressure is developed in the master cylinder to actuate pistons (two in front disc brake and four in rear drum brake).
The master cylinder is a tandem master cylinder. Brake pipes are connected to the master cylinder and they make two independent circuits. One connects front right & rear left brakes and the other connects front left & rear right brakes.
In this brake system, the disc brake is used for the front wheel brake and drum brake (leading / trailing shoes) for the rear brake.
The parking brake system is mechanical. It applies brake force to only rear wheels by means of the cable and mechanical linkage system. The same brake shoes of rear drum brake are used for both parking and foot brakes.

NOTE

- **The figures show LH steering vehicle.**
- **The difference between RH steering vehicle and LH steering vehicle is the location of the brake master cylinder, the brake booster and ABS (ESP®) hydraulic unit / control module assembly.**

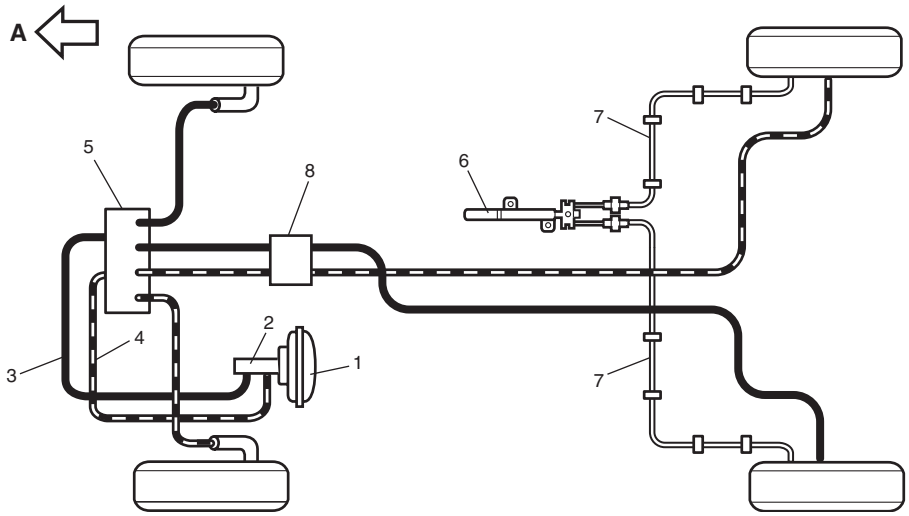

I7RW01410001-01

1. Brake booster	4. Primary side	7. Parking brake cable
2. Master cylinder	5. ABS (ESP®) hydraulic unit / control module assembly	8. 4-way joint
3. Secondary side	6. Parking brake lever	A: Forward

Brake Pedal Foot Protection System Construction (If Equipped)

S7RW0A4101002

Should a front crash occur and the engine push the dash panel toward the interior side, the brake pedal bracket is also pushed toward the interior side. In this case, the brake pedal lever comes off from the brake pedal, thereby preventing the brake pedal from moving rearward.

⚠ CAUTION

Never disassemble brake pedal assembly. Disassemble will spoil its original function. If faulty condition is found, replace it with new one.

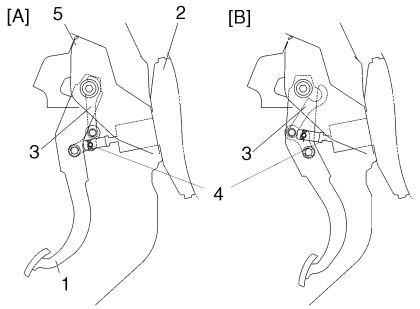

I6RW0C410001-02

[A]: Before crash	2. Brake booster	5. Brake pedal bracket
[B]: After crash	3. Brake pedal lever	
1. Brake pedal	4. Booster push clevis rod	

Diagnostic Information and Procedures

Brakes Diagnosis Note

S7RW0A4104001

Road Testing Brakes

Brakes should be tested on dry, clean, smooth and reasonably level roadway which is not crowned. Road test brakes by making brake applications with both light and heavy pedal forces at various speeds to determine if the vehicle stops evenly and effectively. Also drive vehicle to see if it leads to one side or the other without brake application. If it does, check the tire pressure, front wheel alignment and front suspension attachments for looseness. See diagnosis table for other causes.

Brake Fluid Leaks

Check the master cylinder fluid levels. While a slight drop in reservoir level does result from normal lining wear, an abnormally low level indicates a leak in the system. In such a case, check the entire brake system for leakage. If even a slight evidence of leakage is noted, the cause should be corrected or defective parts should be replaced.

Substandard or Contaminated Brake Fluid

Improper brake fluid, mineral oil or water in the fluid may cause the brake fluid to boil or the rubber components (piston cups and brake hoses) in the hydraulic system to deteriorate.

If the above fluid is included in the system, replace the master cylinder, reservoir and other rubber components (hoses). The master cylinder is disassemble parts to maintain the performance.

The system must be flushed if there is any doubt as to the grade of fluid in the system or if fluid has been used which contained parts that have been subjected to contaminated fluid.

Brakes Symptom Diagnosis

S7RW0A4104002

Condition	Possible cause	Correction / Reference Item
Not enough braking force	Brake fluid leakage from brake lines	*Locate leaking point and repair.*
	Brake disc or pad stained with fluid, grease or other oil	*Clean or replace.*
	Overheated brakes	*Determine cause and repair.*
	Poor contact of shoes on brake drum	*Repair for proper contact.*
	Brake shoe stained with oil or wet with water	*Replace.*
	Badly worn brake pad	*Replace.*
	Defective wheel cylinders	*Repair or replace.*
	Malfunctioning caliper assembly	*Repair or replace.*
	Malfunctioning brake booster	*Check system and replace as necessary.*
	Malfunctioning brake master cylinder	*Check system and replace as necessary.*
	Air in system	*Bleed system.*
	Negative pressure for brake booster is inadequate	*Check engine condition and vacuum hose.*
	Malfunctioning ABS (ESP®)	*Check system and replace as necessary.*
Brake pull (Brakes not working in unison)	Pad, disc, shoe and/or drum are wet with water or stained with oil in some brakes	*Clean or replace.*
	Drum-to-shoe clearance out of adjustment in some brakes (Malfunctioning auto adjusting mechanism)	*Check for inoperative auto adjusting mechanism.*
	Disc and/or drum are out of round in some brakes	*Replace.*
	Tires are inflated unequally	*Inflate equally.*
	Malfunction in wheel cylinders	*Repair or replace.*
	Disturbed front wheel alignment	*Adjust as prescribed.*
	Unmatched tires on same axle	*Tires with approximately the same amount of tread should be used on the same axle.*
	Restricted brake pipes or hoses	*Check for soft hoses and damaged lines. Replace with new hoses and new double-walled steel brake tubing.*
	Malfunctioning caliper assembly	*Caliper should slide. Check for stuck or sluggish pistons and proper lubrication of caliper slide pin.*
	Loose suspension parts	*Check all suspension mountings.*
	Loose calipers	*Check and torque bolts to specifications.*
Noise (High pitched squeak without brake applied)	Contact wear indicator to brake disc	*Replace brake pad.*
	Worn rear brake shoe	*Replace brake shoe.*
Excessive pedal travel (Pedal stroke too large)	Partial brake system failure	*Check brake systems and repair as necessary.*
	Brake fluid leaking	*Repair the leaking point, and bleed air.*
	Air in system (soft / spongy pedal)	*Bleed system.*
	Rear brake system not adjusted (malfunctioning auto adjusting mechanism)	*Adjust rear brakes. Repair auto adjusting mechanism.*
	Bent brake shoes	*Replace brake shoes.*
Brake locked	Malfunctioning ABS (ESP®)	*Check system referring to “ABS Check in Section 4E” or “Electronic Stability Program Check in Section 4F”.*

Condition	Possible cause	Correction / Reference Item
Dragging brakes (A very light drag is present in all brakes immediately after pedal is released)	Master cylinder pistons not returning correctly	*Replace master cylinder.*
	Restricted brake pipes or hoses	*Check for soft hoses or damaged pipes and replace with new hoses and/or new brake piping.*
	Incorrect parking brake adjustment on rear brakes	*Check and adjust to correct specifications.*
	Weakened or broken return springs in the drum brake	*Replace.*
	Sluggish parking brake cables or linkage	*Repair or replace.*
	Wheel cylinder or caliper piston sticking	*Repair as necessary.*
	Badly worn piston seal in caliper	*Replace piston seal.*
	Improper brake pedal free height	*Check brake pedal free height.*
Pedal pulsation (Pedal pulsates when depressed for braking)	Damaged wheel bearings	*Replace wheel bearings.*
	Distorted steering knuckle or rear wheel spindle or rear axle shaft	*Replace knuckle or rear wheel spindle or rear axle shaft.*
	Excessive disc lateral runout	*Check per instructions. If not within specifications, replace or machine disc.*
	Rear drums out of round	*Repair or replace drum as necessary. Check runout.*
Braking noise	Glazed brake pad and/or brake shoe	*Repair or replace brake pad and/or brake shoe.*
	Worn or distorted brake shoe	*Replace brake shoe.*
	Loose front wheel bearings	*Replace wheel hub.*
	Distorted backing plates or loose mounting bolts	*Replace or retighten securing bolts.*
	Contact wear indicator to brake disc	*Replace brake pads.*
Brake warning light lights after engine start	Parking brake applied	*Release parking brake and check that brake warning light turns off.*
	Insufficient amount of brake fluid	*Investigate leaky point, correct it and add brake fluid.*
	Brake fluid leaking	*Investigate leaky point, correct it and add brake fluid.*
	Brake warning light circuit faulty	*Repair circuit.*
	Malfunctioning EBD system	*Check system referring to “EBD Warning Light (Brake Warning Light) Comes ON Steady in Section 4E”.*
Brake warning light turns on when brake is applied	Brake fluid leaking	*Investigate leaky point, correct it and add brake fluid.*
	Insufficient amount of brake fluid	*Investigate leaky point, correct it and add brake fluid.*
Brake warning light fails to turn on even when parking brake is applied	Brake warning light circuit faulty	*Replace bulb or repair circuit.*
ABS warning light or ESP® warning light turns on after engine start	Malfunctioning ABS (ESP®)	*Check system referring to “ABS Check in Section 4E” or “Electronic Stability Program Check in Section 4F”.*
ABS warning light or ESP® warning light turns on when brake is applied	Malfunctioning ABS (ESP®)	*Check system referring to “ABS Check in Section 4E” or “Electronic Stability Program Check in Section 4F”.*
ABS warning light or ESP® warning light after ignition switch has turned ON	Bulb burnt out	*Replace bulb.*
	Malfunctioning ABS (ESP®)	*Check system referring to “ABS Check in Section 4E” or “Electronic Stability Program Check in Section 4F”.*
ABS warning light flashes	New ABS (ESP®) hydraulic unit / control module assembly installed.	*Perform “ABS Hydraulic Unit Operation Check in Section 4E” or “ESP® Hydraulic Unit Operation Check in Section 4F”.*

Repair Instructions

Brake Pedal Components

S7RW0A4106001

⚠ CAUTION

If equipped Brake Pedal Foot Protection System, never disassemble brake pedal assembly. Disassemble will spoil its original function. If faulty condition is found, replace it with new one.

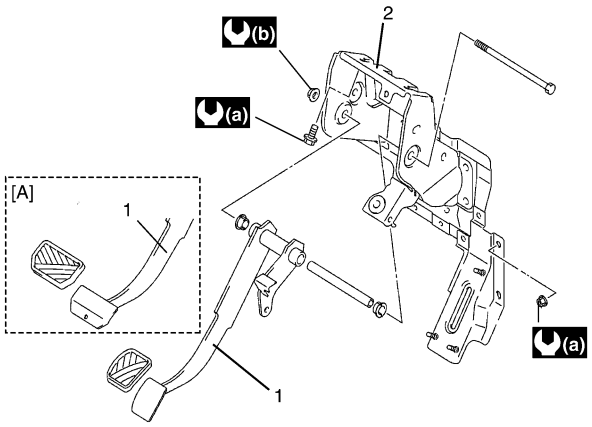

I6RW0C410004-01

[A]: A/T model	(a) : 13 N·m (1.3 kgf-m, 9.5 lb-ft)
1. Brake pedal	(b) : 23 N·m (2.3 kgf-m, 16.5 lb-ft)
2. Brake pedal bracket	

Brake Pedal Free Height Inspection

S7RW0A4106002

1) Check brake pedal free height. If it is not within specification, check and adjust following item 2) to 6).

<u>Brake pedal free height “a” from carpet</u>
“a”: 111 – 131 mm (4.4 – 5.1 in.)

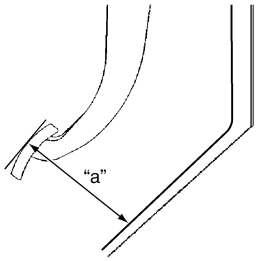

I6RW0C410005-01

2) Check measurement between booster mounting surface and center of clevis pin hole. When booster push rod clevis has been reinstalled, it is important that the measurement is adjusted (refer to “Brake Booster Inspection”).
3) Check brake light switch position. Adjust it if it is out of specification.
4) Check pedal for dent.
5) Check brake booster for installation.
6) Check brake booster push rod for length.

Brake Pedal Play Inspection

S7RW0A4106003

Pedal play should be within the following specification. If out of specification, check brake light switch for proper installation position and adjust if necessary.
Also check pedal shaft bolt and booster clevis pin installation for looseness and replace if defective.

<u>Brake pedal play “a”</u>
: 1 – 8 mm (0.04 – 0.31 in.)

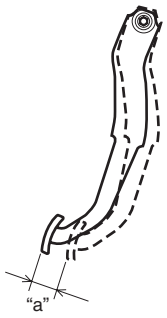

I3RH0A410010-01

Excessive Pedal Travel Inspection

S7RW0A4106004

1) Start engine.
2) Depress brake pedal a few times.
3) With brake pedal depressed with approximately 300 N (30 kg, 66 lbs) load, measure brake pedal to wall (dash panel silencer) clearance “a”. If clearance is out of specification, possible causes are as follows. If clearance “a” is less than specification, the most possible cause is that air is in lines or brake fluid leakage.
   Should clearance “a” remain less than specification even after bleeding of system, other possible but infrequent cause is malfunction of booster push rod length out of adjustment.
   - Bleed brake system. Refer to “Air Bleeding of Brake System”.

Brake pedal arm to wall clearance “a”
When pedal is depressed at 300 N (30 kg, 66 lbs)
“a”: Over 40 mm (1.57 in.)

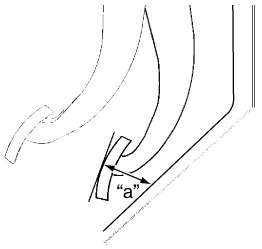

I6RW0C410006-01

Brake Fluid Level Inspection

S7RW0A4106005

⚠ CAUTION

Do not use shock absorber fluid or any other fluid which contains mineral oil. Do not use a container which has been used for mineral oil or a container which is wet from water. Mineral oil will cause swelling and distortion of rubber parts in hydraulic brake system and water mixed into brake fluid will lower fluid boiling point. Keep all fluid containers capped to prevent contamination.

NOTE

Be sure to use particular brake fluid either as indicated on reservoir cap of that vehicle or recommended in owner’s manual which comes along with that vehicle. Use of any other fluid is strictly prohibited.
Fluid level should be between MIN and MAX lines marked on reservoir.
When brake warning light lights sometimes during driving, replenish fluid to MAX level. When fluid decreases quickly, inspect brake system for leakage. Correct leaky points and then refill to specified level.

1) Check master cylinder, reservoir and reservoir hose (if equipped) for crack, damage and brake fluid leakage. If any faulty condition exists, correct or replace.
2) Check that brake fluid level is between MAX (1) and MIN marks (2) on reservoir.

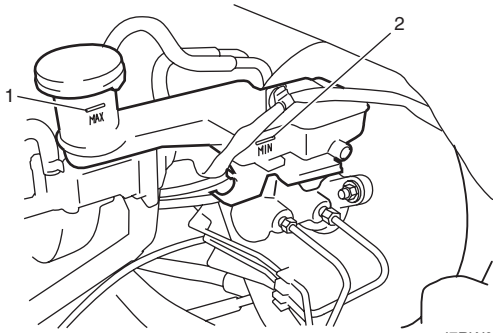

I7RW01410004-01

Brake Light Switch Adjustment

S7RW0A4106006

Adjustment should be made as follows. Pull up brake pedal toward you and while holding it there, adjust switch position so that clearance between end of thread and brake pedal is as specified. Then lock it by turning clockwise.

Clearance between brake pedal and brake light switch
"a": 0.5 – 1.5 mm (0.02 – 0.05 in.)

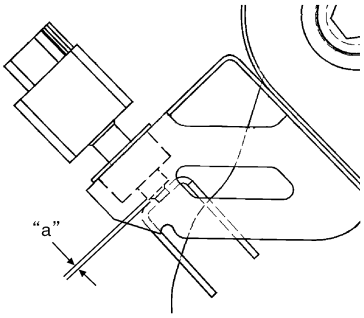

I5RW0A410005-01

Air Bleeding of Brake System

S7RW0A4106007

⚠ CAUTION

Brake fluid is extremely damaging to paint. If fluid should accidentally touch painted surface, immediately wipe fluid from paint and clean painted surface.

Bleeding operation is necessary to remove air whenever it entered hydraulic brake system.
Hydraulic lines of brake system are based on the diagonal split system. When a brake pipe or hose was disconnected at the wheel, bleeding operation must be performed at both ends of the line of the removed pipe or hose. When any joint part of the master cylinder of other joint part between the master cylinder and each brake (wheel) was removed, the hydraulic brake system must be bled at all 4 wheel brakes.

NOTE

Perform bleeding operation starting with rear brake caliper or wheel cylinder farthest from master cylinder and then at front caliper of the same brake line. Do the same on the other brake line.

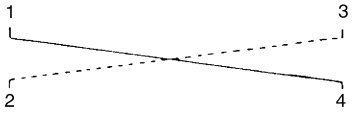

I7RW01410005-01

1. Right front brake caliper	3. Right rear wheel cylinder
2. Left front brake caliper	4. Left rear wheel cylinder

1) Fill master cylinder reservoir with specified brake fluid and keep at least one-half full of fluid during bleeding operation.

   Brake fluid
   : Refer to reservoir cap

2) Remove bleeder plug cap. Attach a vinyl tube to bleeder plug, and insert the other end into container.
3) Depress brake pedal several times, and then while holding it depressed, loosen bleeder plug about one-third to one-half turn.
4) When fluid pressure in cylinder is almost depleted, retighten bleeder plug.
5) Repeat this operation until there are no more air bubbles in hydraulic line.

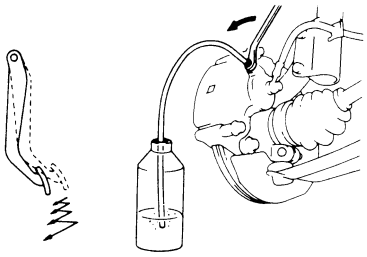

I2RH01410016-01

6) When bubbles stop, depress and hold brake pedal and tighten bleeder plug.

   Tightening torque
   Front brake caliper bleeder plug: 9 N·m (0.9 kgf-m, 6.5 lb-ft)
   Rear wheel cylinder bleeder plug: 8 N·m (0.8 kgf-m, 6.0 lb-ft)

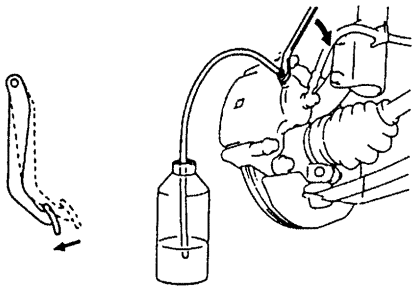

I2RH01410017-01

7) Then attach bleeder plug cap.
8) After completing bleeding operation, apply fluid pressure to pipe line and check for leakage.
9) Replenish fluid into reservoir up to specified level referring to "Brake Fluid Level Inspection".
10) Check brake pedal for sponginess. If found spongy, repeat entire procedure of bleeding.

Front Brake Hose / Pipe Components

S7RW0A4106019

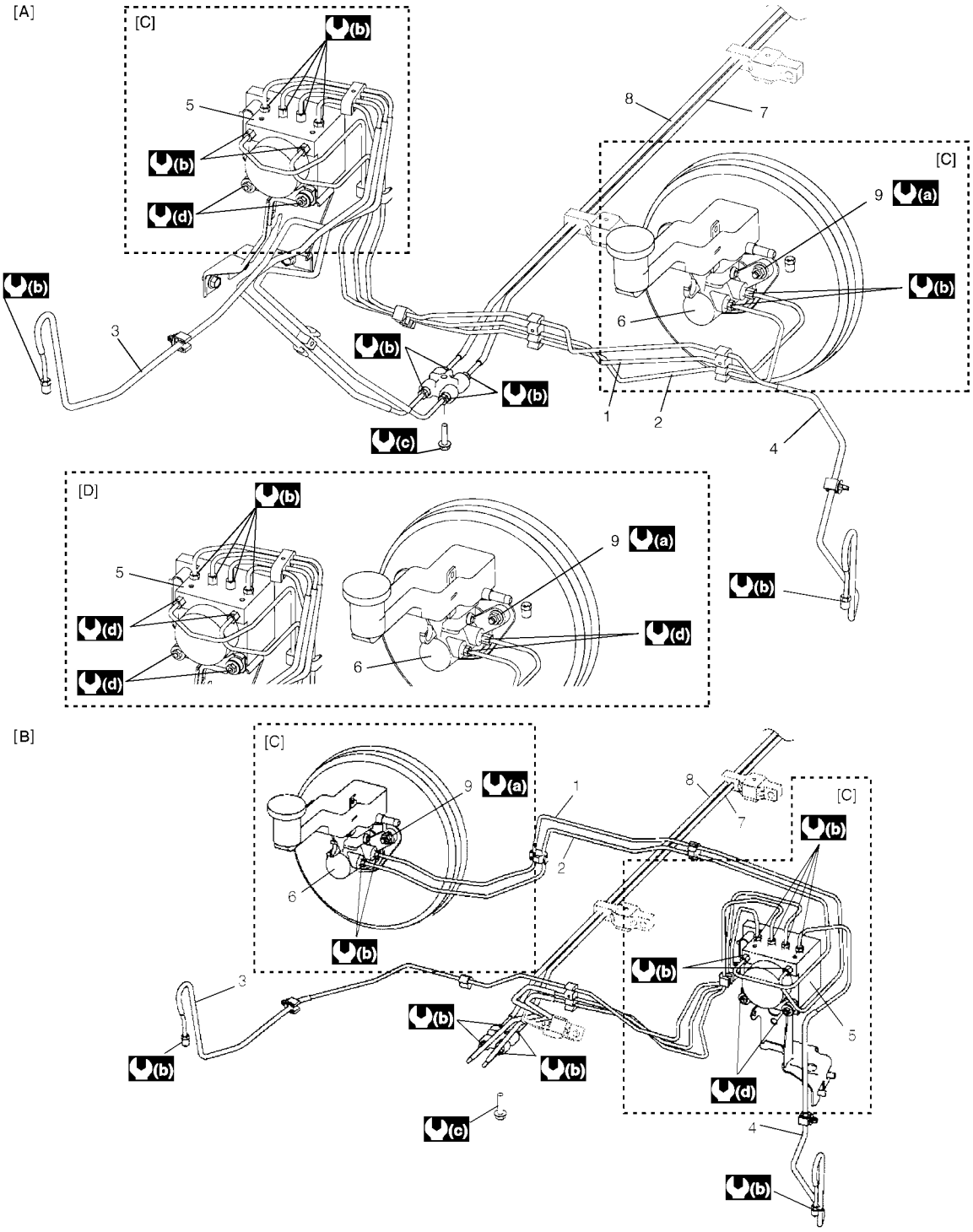

I7RW0A410001-01

[A]: LHD	3. From ABS (ESP®) hydraulic unit to right front brake	9. Master cylinder fixing nut
[B]: RHD	4. From ABS hydraulic unit to left front brake	(a) : 18 N·m (1.8 kgf-m, 13.0 lb-ft)
[C]: ABS model	5. ABS (ESP®) hydraulic unit / control module assembly	(b) : 16 N·m (1.6 kgf-m, 12.0 lb-ft)
[D]: ESP® model	6. Master cylinder	(c) : 11 N·m (1.1 kgf-m, 8.0 lb-ft)
1. From master cylinder primary to ABS (ESP®) hydraulic unit	7. From ABS (ESP®) hydraulic unit to left rear brake	(d) : 9 N·m (0.9 kgf-m, 6.5 lb-ft)
2. From master cylinder secondary to ABS (ESP®) hydraulic unit	8. From ABS (ESP®) hydraulic unit to right rear brake	

Front Brake Hose and Pipe Removal and Installation

S7RW0A4106008

⚠ CAUTION

Do not allow brake fluid to get on painted surfaces. Painted surfaces will be damaged by brake fluid, flush it with water immediately if any fluid is spilled.

Removal

1) Hoist vehicle and remove tire and wheel.

NOTE

This operation is not necessary, when removing pipes which is connecting master cylinder.

2) Clean dirt and foreign material from both flexible hose end and pipe end fittings.
3) Drain brake fluid in reservoir.
4) Remove brake flexible hose or pipe.

Installation

Reverse brake flexible hose removal procedure, noting the following.

- Make sure that steering wheel is in straight-forward position and flexible hose has not twist or kink.
- Install clamps and tighten nuts referring to “Front Brake Hose / Pipe Components”.
- Install brake flexible hose (1) to caliper as shown in figure.

Tightening torque
Flexible hose joint bolt (a): 23 N·m (2.3 kgf-m, 17.0 lb-ft)

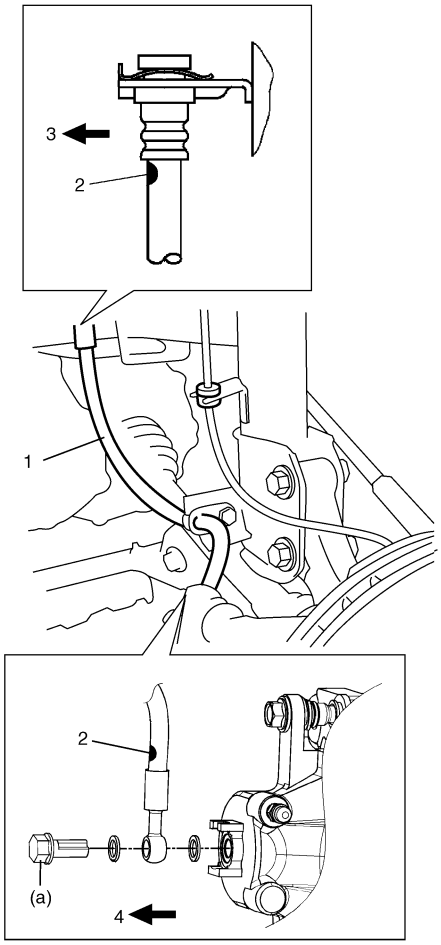

I7RW01410007-02

2.	Location mark
3.	Outside of vehicle
4.	Inside of vehicle

- Check to make sure that flexible hose doesn’t contact any part of suspension, both in extreme right and extreme left turn conditions. If it does at any point, remove and correct. Fill and maintain brake fluid level in reservoir.
- Bleed brake system. Refer to “Air Bleeding of Brake System”.
- Perform brake test and check installed part for fluid leakage.

Rear Brake Hose / Pipe Components

S7RW0A4106020

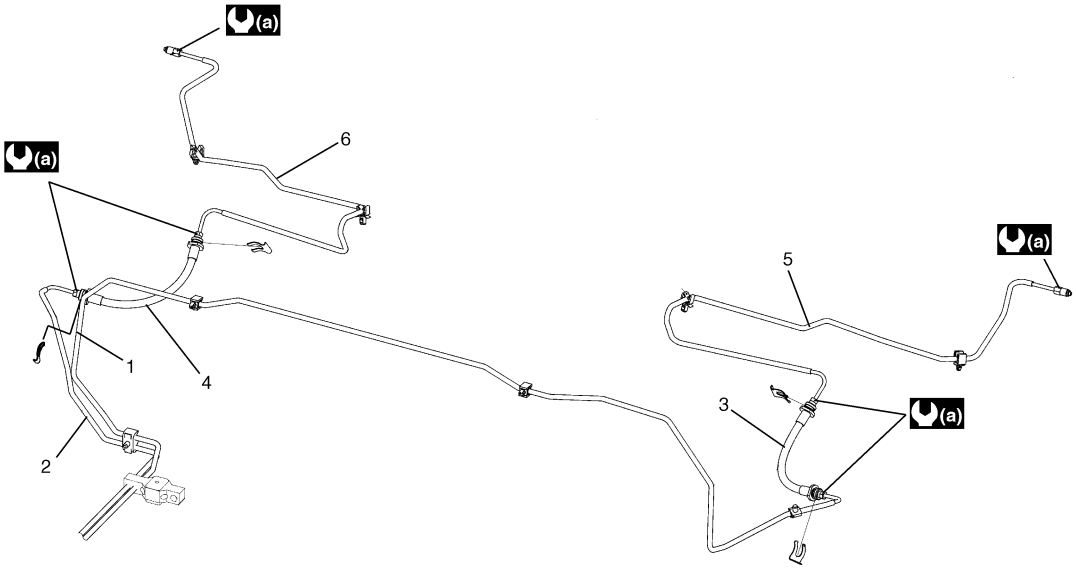

I6RW0D410001-01

1. To left rear brake hose	5. Left rear brake hose to left brake
2. To right rear brake hose	6. Right rear brake hose to right brake
3. Left rear brake hose	(a) : 16 N·m (1.6 kgf-m, 12.0 lb-ft)
4. Right rear brake hose	

Rear Brake Hose and Pipe Removal and Installation

S7RW0A4106009

⚠ CAUTION

Do not allow brake fluid to get on painted surfaces. Painted surfaces will be damaged by brake fluid, flush it with water immediately if any fluid is spilled.

Removal

1) Hoist vehicle and remove tire and wheel.
2) Clean dirt and foreign material from both flexible hose end and pipe end fittings.
3) Drain brake fluid in reservoir.
4) Remove brake flexible hose or pipe.

Installation

Reverse brake flexible hose removal procedure, noting the following.

- Install clamps and tighten nuts referring to “Rear Brake Hose / Pipe Components”.
- Fill and maintain brake fluid level in reservoir.
- Bleed brake system. Refer to “Air Bleeding of Brake System”.
- Perform brake test and check each installed part for fluid leakage.
- When installing hose, make sure that it has no twist or kink.

Brake Hose and Pipe Inspection

S7RW0A4106021

Perform this inspection where these is enough light and use a mirror as necessary.

- Check brake hoses and pipes for proper hookup, leaks, cracks, chafing and other damage.
- Check that hoses and pipes are clear of sharp edges and moving parts.

Replace these parts as necessary.

⚠ CAUTION

After replacing brake pipe or hose, be sure to carry out air purge operation referring to “Air Bleeding of Brake System”.

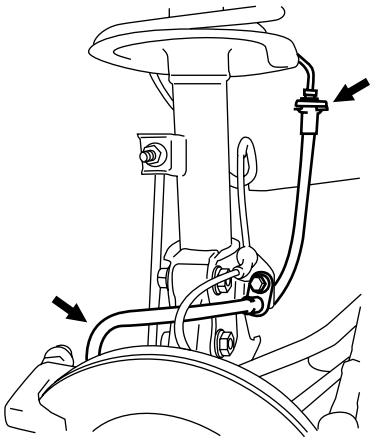

I4RS0A020008-01

Master Cylinder and Brake Booster Components

S7RW0A4106011

⚠ CAUTION

Never disassemble master cylinder and brake booster. Disassembly will spoil its original function. If faulty condition is found, replace it with new one.

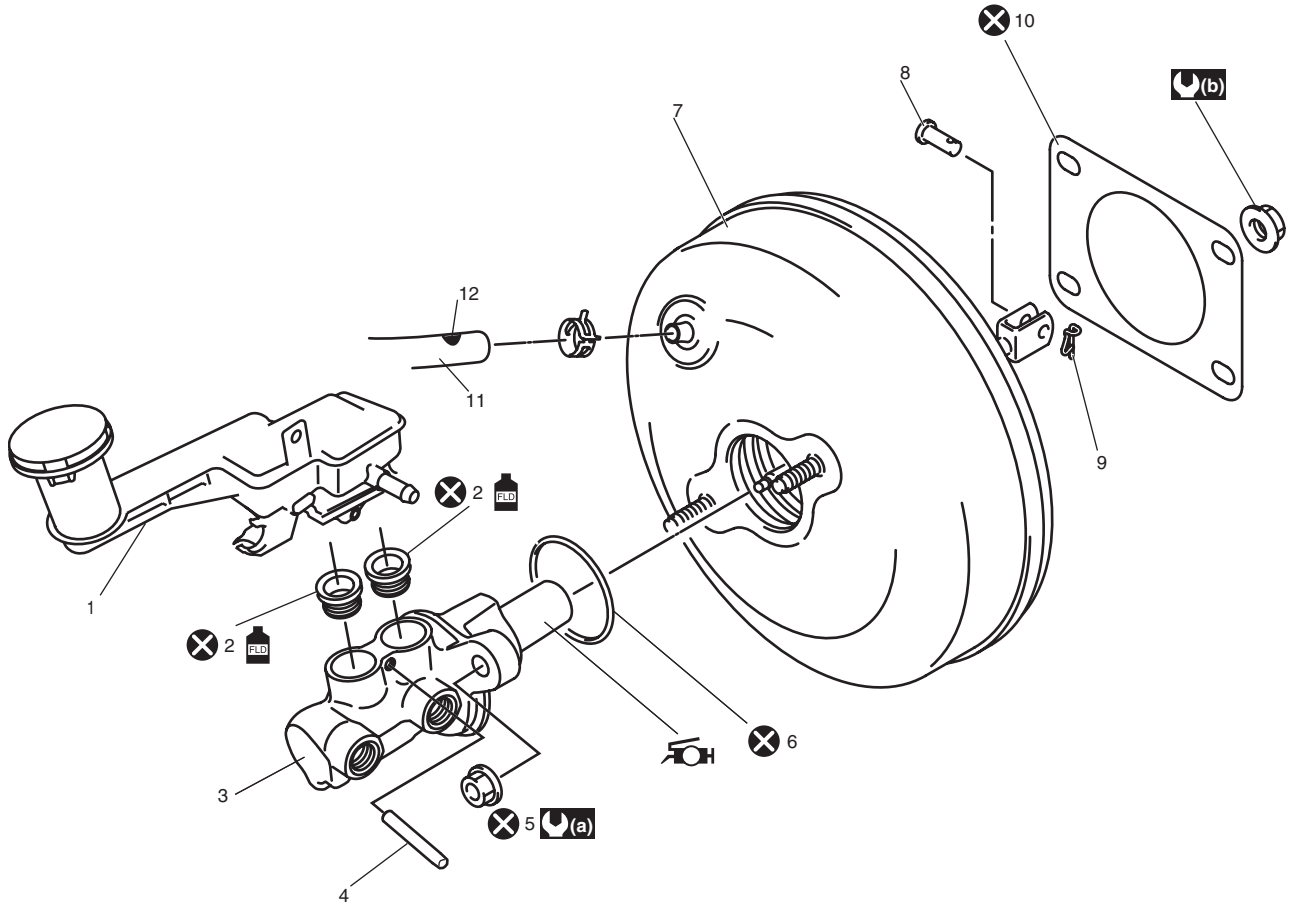

I7RW01410017-03

1. Reservoir	6. O-ring	11. Brake vacuum hose : Be sure to direct location mark (12) to upward as shown in figure.
FLD 2. Grommet : Apply brake fluid.	7. Brake booster	(a) : 18N·m (1.8kgf-m, 13.0 lb-ft)
3. Master cylinder	8. Clevis pin	(b) : 13N·m (1.3kgf-m, 9.5lb-ft)
4. Reservoir connect pin	9. Clip	⊗ : Do not reuse.
5. Master cylinder fixing nut	10. Gasket	: Apply grease to piston rod (Grease included in spare parts to master cylinder or brake booster.)

Master Cylinder Reservoir Removal and Installation

S7RW0A4106012

⚠ CAUTION

Do not allow brake fluid to get on painted surfaces. Painted surfaces will be damaged by brake fluid, flush it with water immediately if any fluid is spilled.

Removal

1) Clean outside of reservoir and master cylinder.
2) Disconnect fluid level switch coupler (1) and clamp (3) from reservoir (2).

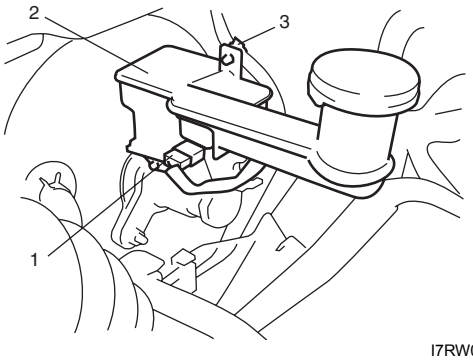

I7RW01410009-01

3) Drain brake fluid in reservoir.
4) Disconnect clutch reservoir hose from reservoir (M/T model).
5) Remove reservoir connector pin (1) by using special tool and then reservoir.

Special tool
(A): 09916–44310

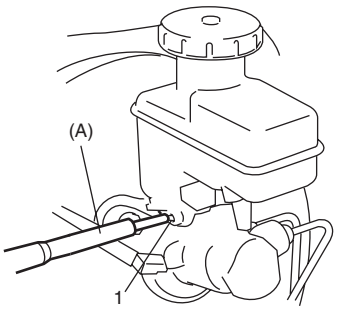

I5JB0A410013-02

Installation

1) When using new grommets (2), lubricate them with the same fluid as the one to fill reservoir with. Then press-fit grommets (2) to master cylinder (3).
2) Install reservoir (1) to master cylinder.

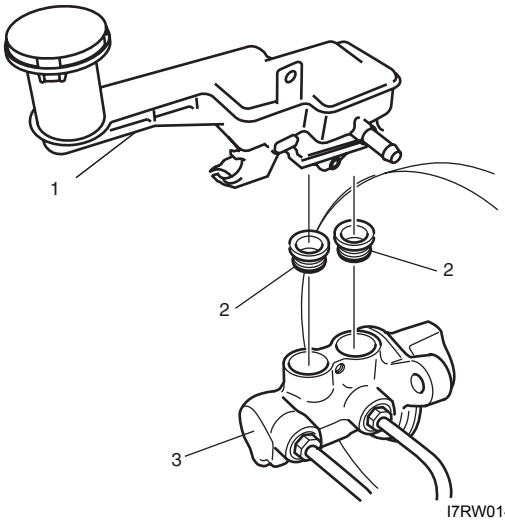

I7RW01410010-02

3) Drive in reservoir connector pin (2) by using special tool (A). Till both of its ends at the right and left of reservoir (1) becomes the same length.

Special tool
(A): 09916–44310

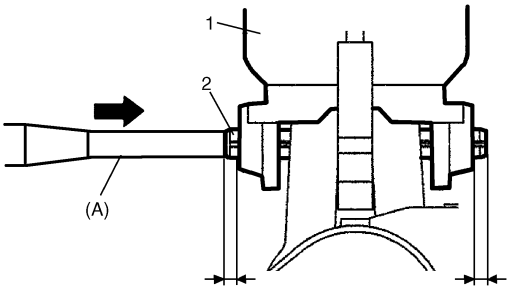

I7RW01410011-01

4) Connect clutch reservoir hose to reservoir (M/T model).
5) Connect fluid level switch coupler (1) and clamp (3) to reservoir (2).

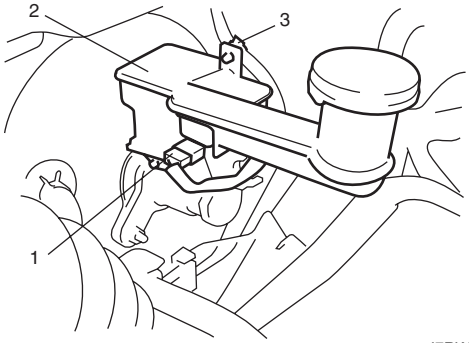

I7RW01410009-01

6) Fill reservoir with specified brake fluid up to its MAX level.
7) After completing the work, bleed air from brake system referring to “Air Bleeding of Brake System” and bleed air from clutch system referring to“Air Bleeding of Clutch System in Section 5C” (M/T model).
8) Check each installed parts for fluid leakage.
9) Perform brake test and check fluid leakage.

Master Cylinder Removal and Installation

S7RW0A4106013

⚠ **CAUTION**

- **Never disassemble master cylinder since the master cylinder is supplied as assembly parts.**
  If faulty condition is found, replace it with new one.
- **Do not allow brake fluid to get on painted surfaces. Painted surfaces will be damaged by brake fluid, flush it with water immediately if any fluid is spilled.**

Removal

1) Clean outside of master cylinder.
2) Disconnect fluid level switch coupler (1) and clamp (3) from reservoir (2).

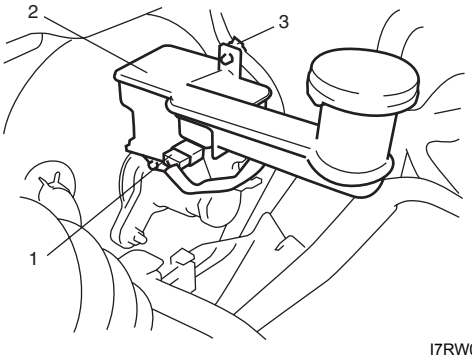

I7RW01410009-01

3) Drain brake fluid in reservoir.
4) Disconnect clutch reservoir hose from reservoir (M/T model).
5) Disconnect brake pipes (1) connected to master cylinder.
6) Remove master cylinder fixing nuts (2).
7) Remove master cylinder (3) and O-ring.

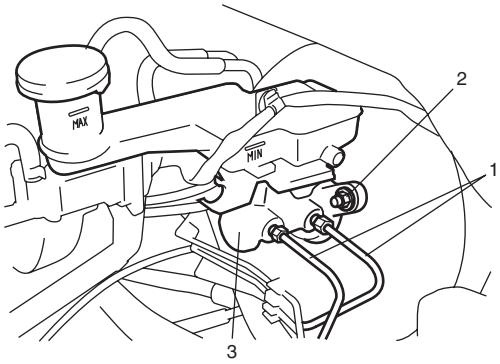

I7RW01410012-01

Installation

1) Install new O-ring (2) to master cylinder assembly (1).
2) Apply grease to piston rod “A”.
   Use specified grease in spare to master cylinder or brake booster as supply parts.
3) Install master cylinder assembly (1) to brake booster (3) and tighten master cylinder fixing nuts to specified torque.

   Tightening torque
   Master cylinder fixing nut (a): 18 N·m (1.8 kgf-m, 13.0 lb-ft)

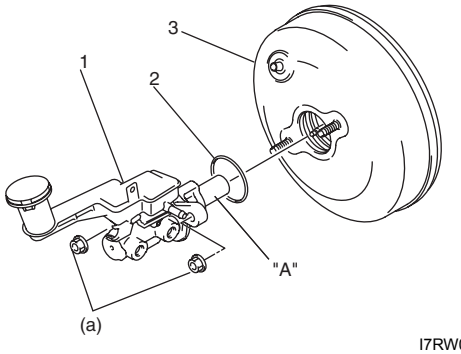

I7RW01410019-01

4) Connect brake pipe to master cylinder and tighten flare nuts to specified torque.

Tightening torque
Brake pipe flare nut for M10 (a): 16 N·m (1.6 kgf-m, 12.0 lb-ft)
Brake pipe flare nut for M12 (a): 19 N·m (1.9 kgf-m, 14.0 lb-ft)

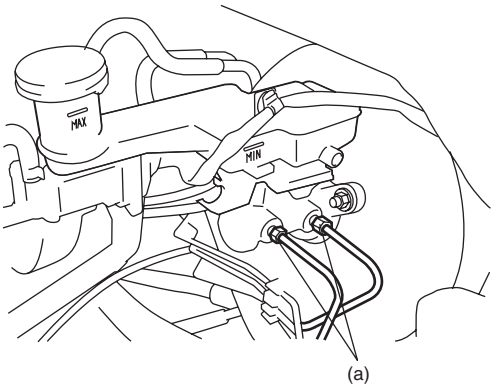

I7RW01410013-01

5) Connect clutch reservoir hose to reservoir and install reservoir hose clamp (M/T model).
6) Connect fluid level switch connector and clamp.
7) Fill reservoir with specified brake fluid up to its MAX level.
8) After completing the work, bleed air from brake and clutch system referring to “Air Bleeding of Brake System” and bleed air from clutch system referring to “Air Bleeding of Clutch System in Section 5C” (M/T model).
9) Check each installed parts for fluid leakage.
10) Check brake pedal for play referring to “Brake Pedal Play Inspection”.
11) Perform brake test and check fluid leakage.

Master Cylinder Inspection

S7RW0A4106014

- Depress brake pedal a few times and retain brake pedal. If pedal gone down, replace the brake master cylinder assembly.
- Check master cylinder for brake fluid leakage, corrosion and smooth operation.
- Inspect distance “a” to be the following.
  If measurement is out of specification, replace master cylinder assembly.

Distance
“a”: 72.0 mm (2.83 in.) or more

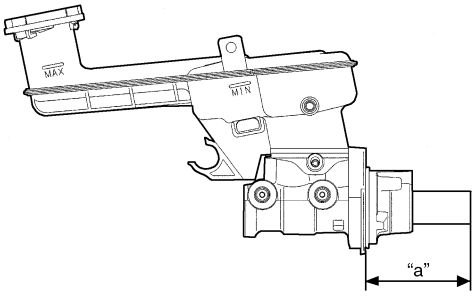

I7RW01410014-01

Booster Operation Inspection

S7RW0A4106015

There are two ways to perform this inspection, with and without a tester. Ordinarily, it is possible to roughly determine its condition without using a tester.

NOTE

For this check, make sure that no air is in hydraulic line.

Check Air Tightness

1) Start engine.
2) Stop engine after running for 1 – 2 minutes.
3) Depress brake pedal several times with the same load as in ordinary braking and observe pedal travel. If pedal goes down deep the first time but its travel decreases as it is depressed the second and more times, air tightness is obtained.

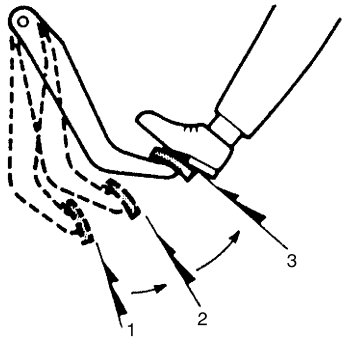

I2RH01410005-01

1. 1st	2. 2nd	3. 3rd

4) If pedal travel doesn't change, air tightness isn't obtained.

NOTE

If defective, inspect vacuum lines and sealing parts, and replace any faulty part. When this has been done, repeat the entire test.

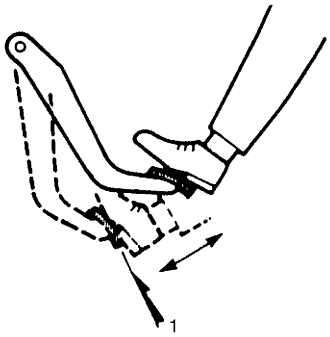

I2RH01410006-01

1.	1st, 2nd, 3rd

Check Operation

1) With engine stopped, depress brake pedal several times with the same load and make sure that pedal travel doesn't change.

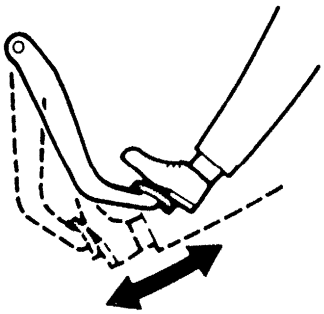

I2RH01410007-01

2) Start engine while depressing brake pedal. If pedal travel increases a little, operation is satisfactory. But no change in pedal travel indicates malfunction.

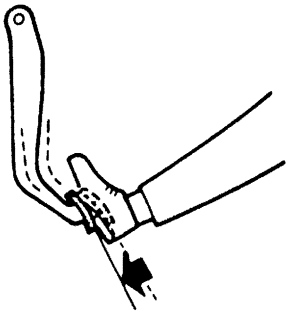

I2RH01410008-01

Check Air Tightness Under Load

1) With engine running, depress brake pedal. Then stop engine while holding brake pedal depressed.

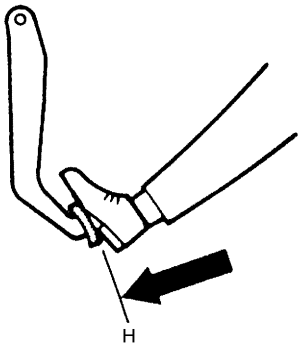

I2RH01410009-01

H:	Hold

2) Hold brake pedal depressed for 30 seconds. If pedal height does not change, condition is good. But it isn't if pedal rises.

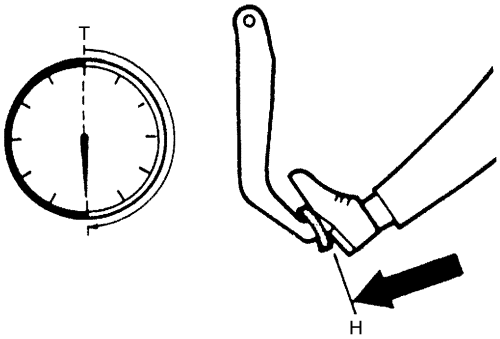

I2RH01410010-01

H:	Hold
T:	30 seconds

Brake Booster Removal and Installation

S7RW0A4106016

Removal

1) Remove master cylinder assembly from booster referring to “Master Cylinder Removal and Installation”.
2) Disconnect vacuum hose from booster referring to “Master Cylinder and Brake Booster Components”.
3) Remove front brake pipe (from master cylinder primary and secondary to ABS hydraulic unit pipe) referring to “Front Brake Hose and Pipe Removal and Installation”.
4) Remove clip (1) and then remove push rod clevis pin (2).
5) Loosen booster mounting nuts (3) and then remove booster.

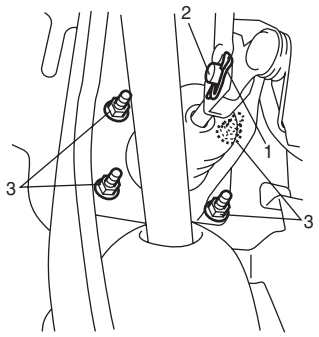

I5RW0A410019-02

Installation

1) Install booster to dash panel. Then connect push rod clevis pin (2) and clip (1).
2) Tighten booster mounting nuts (3) to specified torque.

   Tightening torque
   Booster mounting nut (a): 13 N·m (1.3 kgf-m, 9.5 lb-ft)

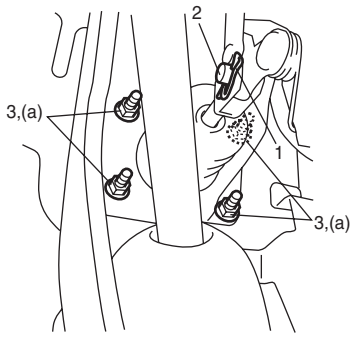

I5RW0A410021-02

3) Connect vacuum hose to booster referring to “Master Cylinder and Brake Booster Components”.
4) Install front brake pipe (from master cylinder primary and secondary to ABS hydraulic unit pipe) referring to “Front Brake Hose and Pipe Removal and Installation”.
5) Install master cylinder assembly to booster referring to “Master Cylinder Removal and Installation”.
6) Fill reservoir with specified fluid.
7) Bleed air from brake system referring to “Air Bleeding of Brake System” and at the same time bleed air from clutch system referring to “Air Bleeding of Clutch System in Section 5C” (M/T model).
8) Check pedal height and play referring to “Brake Pedal Free Height Inspection” and “Brake Pedal Play Inspection”.
9) Check each installed part for fluid leakage and perform brake test.

Brake Booster Inspection

S7RW0A4106017

- Check brake booster for damage and operation.
- Check boot for damage and deterioration.
- Check for push clevis rod distance.
  If any malfunction is found, replace brake booster.

Booster Push Clevis Rod Adjustment

S7RW0A4106018

Install push clevis rod (1) so that measurement “a” is obtained and torque nut (2) to specification.

Tightening torque
Clevis pin lock nut (a): 26 N·m (2.6 kgf-m, 19.0 lb-ft)

<u>Clevis installing position (length “a”)</u>
“a”: 129.5 - 130.5 mm (5.10 - 5.13 in.)

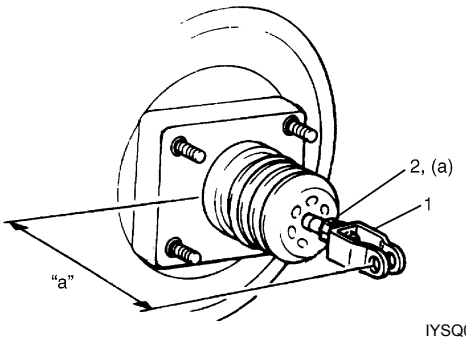

IYSQ01410050-01

Specifications

Tightening Torque Specifications

S7RW0A4107001

Fastening part	Tightening torque			Note
	N·m	kgf-m	lb-ft	
Front brake caliper bleeder plug	9	0.9	6.5	☞
Rear wheel cylinder bleeder plug	8	0.8	6.0	☞
Flexible hose joint bolt	23	2.3	17.0	☞
Master cylinder fixing nut	18	1.8	13.0	☞
Brake pipe flare nut for M10	16	1.6	12.0	☞
Brake pipe flare nut for M12	19	1.9	14.0	☞
Booster mounting nut	13	1.3	9.5	☞
Clevis pin lock nut	26	2.6	19.0	☞

NOTE

The specified tightening torque is also described in the following.
“Brake Pedal Components”
“Front Brake Hose / Pipe Components”
“Rear Brake Hose / Pipe Components”
“Master Cylinder and Brake Booster Components”

Reference:
For the tightening torque of fastener not specified in this section, refer to “Fasteners Information in Section 0A”.

Special Tools and Equipment

Recommended Service Material

S7RW0A4108001

NOTE

Required service material is also described in the following.
“Master Cylinder and Brake Booster Components”

Special Tool

S7RW0A4108002

09916–44310 Valve guide remover (5 mm) ☞ / ☞ 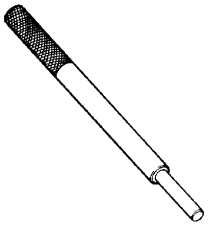	

Front Brakes

Repair Instructions

Front Disc Brake Components

S7RW0A4206001

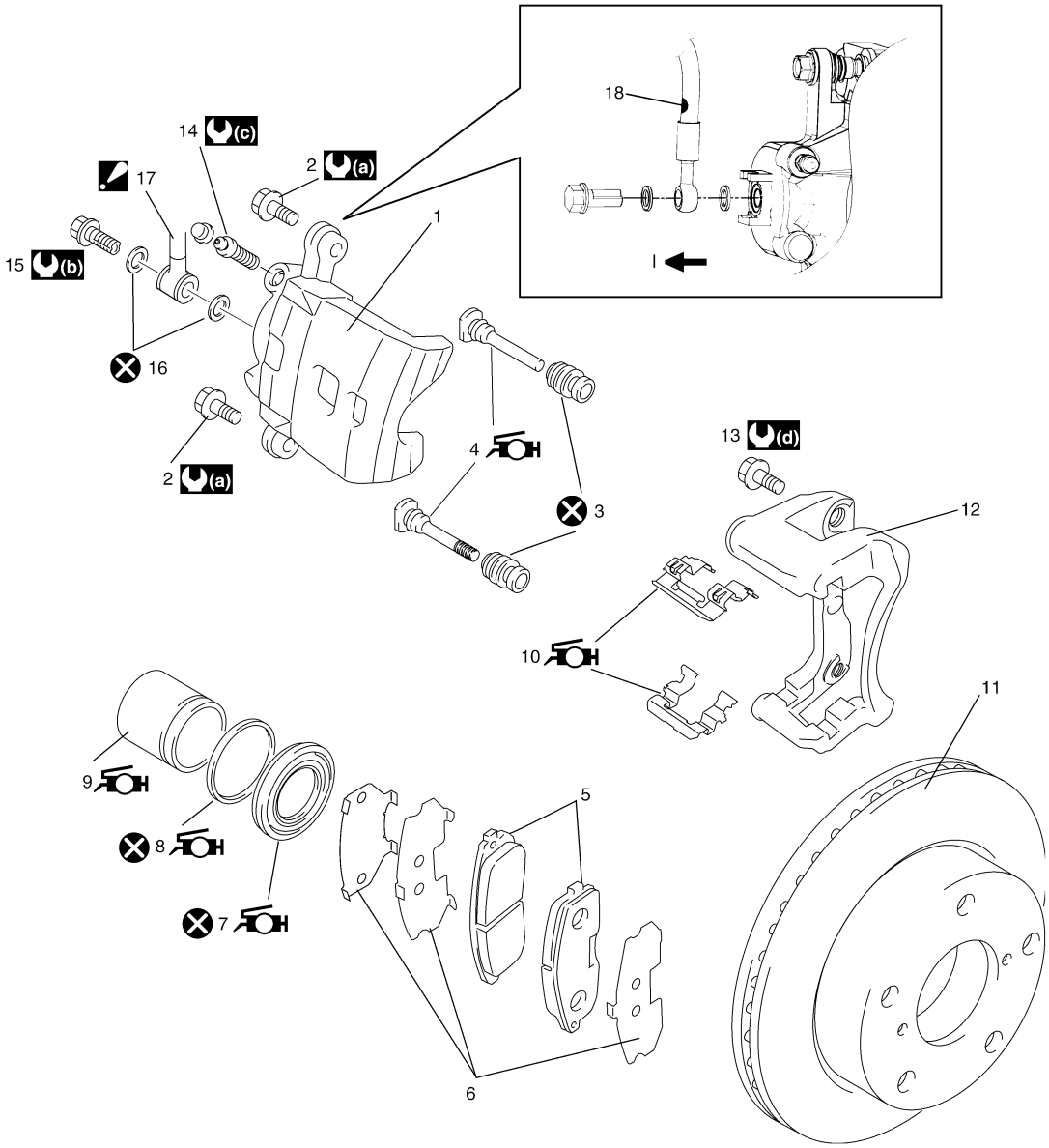

I8RW01420001-01

1. Caliper	9. Disc brake piston : Apply rubber grease included in piston seal set or brake fluid to contact surface of cylinder.	17. Brake flexible hose : Be sure to direct mark (18) to inside of vehicle “I” as shown in figure.
2. Caliper pin bolt	10. Pad spring : Apply grease included in brake pad spare parts to inside.	(a) : 26 N·m (2.6 kgf-m, 19.0 lb-ft)
3. Pin boot	11. Brake disc	(b) : 23 N·m (2.3 kgf-m, 17.0 lb-ft)
4. Slide pin : Apply rubber grease included in slide pin / boot set.	12. Brake caliper carrier	(c) : 9 N·m (0.9 kgf-m, 6.5 lb-ft)
5. Brake pad	13. Caliper carrier bolt	(d) : 85 N·m (8.5kgf-m, 61.5 lb-ft)
6. Shim	14. Bleeder plug	: Do not reuse.
7. Cylinder boot : Apply small amount of rubber grease included in piston seal set or brake fluid.	15. Flexible hose joint bolt	
8. Piston seal : Apply small amount of rubber grease included in piston seal set or brake fluid.	16. Hose washer	

Front Disc Brake Pad On-Vehicle Inspection

S7RW0A4206002

Inspect pad linings periodically according to maintenance schedule whenever wheels are removed (for tire rotation or other reason). Take a look through each end and inspection hole of caliper and check lining thickness of outside and inside pads.
If lining is worn and its thickness (“a” in figure) is less than limit, all pads must be replaced at the same time.

Front brake pad thickness “a” (lining thickness)
Standard: 10 mm (0.39 in.)
Limit: 2 mm (0.08 in.)

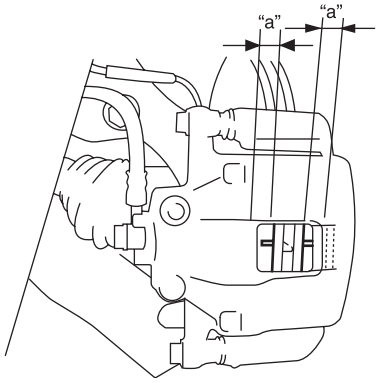

I7RW01420009-01

Front Disc Brake Pad Removal and Installation

S7RW0A4206003

NOTE

When replacing brake pad, replace it both side brake caliper as the set.

Removal

1) Hoist vehicle and remove front wheel.
2) Remove caliper pin bolts (1).

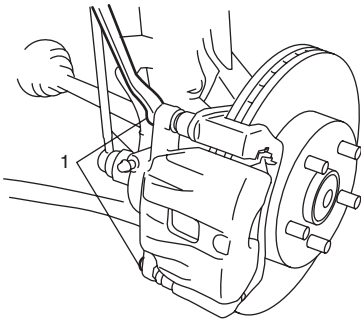

I7RW01420003-01

3) Remove caliper (1) from caliper carrier (2).

NOTE

Hang removed caliper (1) with a wire hook (4) or the like so as to prevent brake hose from bending and twisting excessively or being pulled.
Don’t operate brake pedal with brake pads removed.

4) Remove brake pads (3).

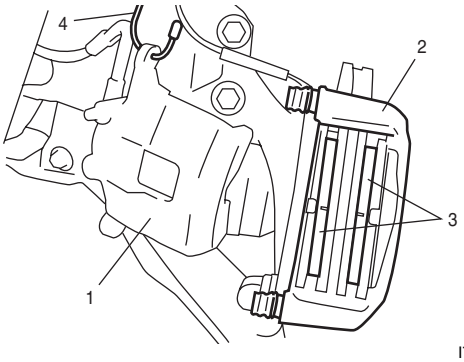

I7RW01420010-01

5) Remove brake pad spring (1) as show in figure.

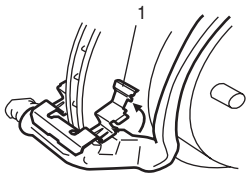

I7RW01420014-01

Installation

1) Apply small amount of pad grease “a” (included in spare parts) to pad spring and set brake pad spring as shown in figure.

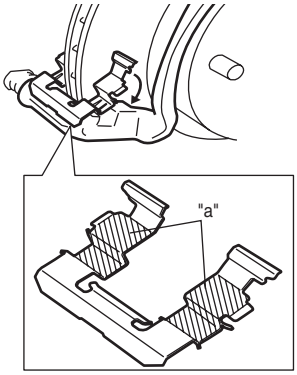

I7RW01420011-01

2) Set brake pad springs (1), and install brake pads (2) and shims (4).

NOTE

Install the brake pad with wear indicator (3) to the vehicle center side of front right brake pad.

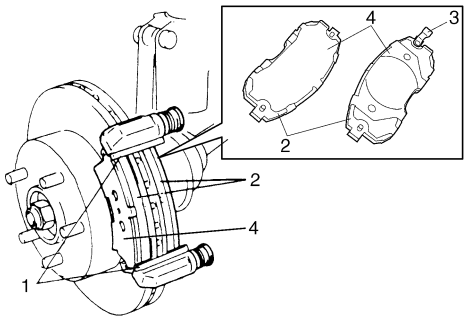

I7RW01420012-01

3) Install caliper and tighten caliper pin bolts to specified torque.

Tightening torque
Caliper pin bolt (a): 26 N·m (2.6 kgf-m, 19.0 lb-ft)

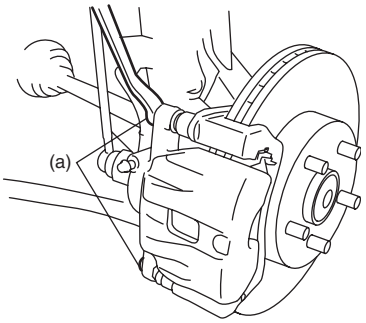

I7RW01420005-02

4) Install front wheel referring to “Wheel (with Tire) Removal and Installation in Section 2D”.
5) Check brake effectiveness.

Front Disc Brake Pad Inspection

S7RW0A4206004

Check pad lining for wear. When the wear exceeds limit, replace with new one.

⚠ CAUTION

Never polish pad lining with sandpaper. If lining is polished with sandpaper, hard particles of sandpaper will be deposited in lining and may damage disc. When pad lining requires correction, replace it with a new one.

Front disc brake pad thickness (lining thickness)
Standard: 10 mm (0.39 in.)
Limit: 2 mm (0.08 in.)

NOTE

When pads are removed, visually inspect caliper for brake fluid leak. Correct leaky point, if any.

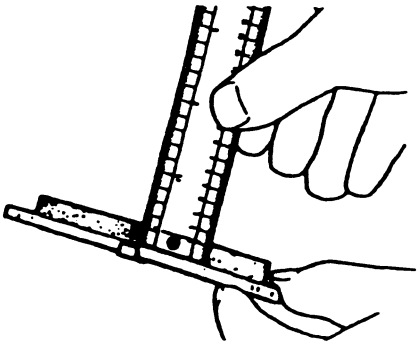

I2RH01420005-01

Front Disc Brake Caliper Removal and Installation

S7RW0A4206005

Removal

1) Hoist vehicle and remove front wheel.
2) Remove brake flexible hose joint bolt (1) from caliper (2). As this will allow fluid to flow out of hose (3), have a container ready beforehand.

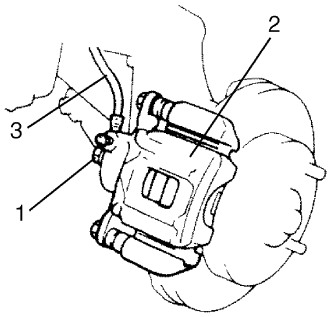

I7RW01420006-01

3) Remove caliper pin bolts (1).

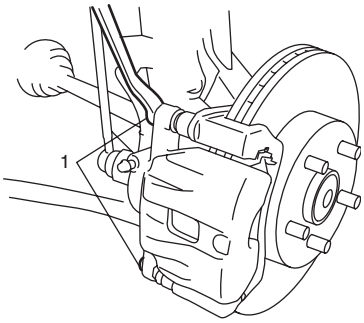

I7RW01420003-01

4) Remove caliper from caliper carrier.

Installation

1) Install caliper to caliper carrier.
2) Tighten caliper pin bolts to specified torque.

NOTE

Make sure that boots are fit into groove securely.

Tightening torque
Caliper pin bolt (a): 26 N·m (2.6 kgf-m, 19.0 lb-ft)

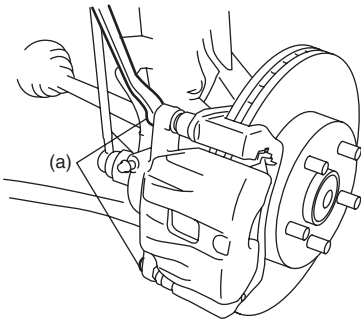

I7RW01420005-02

3) Connect flexible hose (3) to caliper as shown in figure.
4) Tighten flexible hose joint bolt to specified torque.

Tightening torque
Flexible hose joint bolt (a): 23 N·m (2.3 kgf-m, 17.0 lb-ft)

⚠ WARNING

- **Make sure that flexible hose is not twisted when tightening joint bolt. If it is twisted, reconnect it using care not to twist it.**
- **Be sure to direct mark (1) to inside of vehicle (2) as shown in figure.**

5) Tighten bleeder plug to specified torque.

Tightening torque
Bleeder plug (b): 9 N·m (0.9 kgf-m, 6.5 lb-ft)

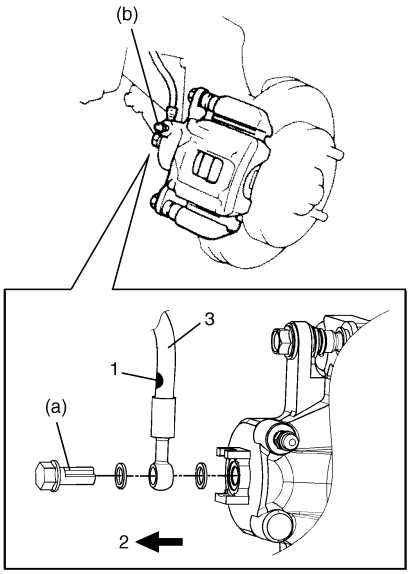

I7RW01420007-02

6) Install front wheel referring to “Wheel (with Tire) Removal and Installation in Section 2D”.
7) After completing the installation, fill reservoir with brake fluid and bleed air from brake system referring to “Air Bleeding of Brake System in Section 4A”.
8) Check every installed part for fluid leakage.
9) Perform brake test and check fluid leakage.

Front Disc Brake Caliper Disassembly and Assembly

S7RW0A4206006

Disassembly

⚠ CAUTION

Clean around caliper with brake fluid before disassembly.

1) Remove disc brake piston with air blown into flexible hose joint bolt installation hole.

⚠ WARNING

Do not apply too highly compressed air which will cause piston to jump out of cylinder. Place a cloth (1) to prevent piston from damage. It should be taken out gradually with moderately compressed air. Do not place your fingers in front of piston when using compressed air.

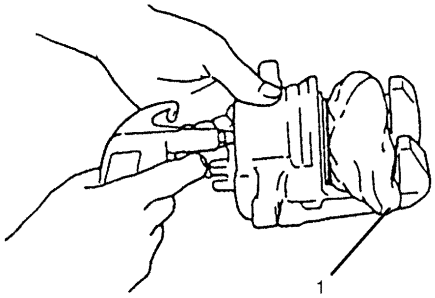

I2RH01420011-01

2) Remove cylinder boot.
3) Remove piston seal using a thin blade like a thickness gauge, etc.

⚠ CAUTION

Be careful not to damage inside (bore side) of cylinder.

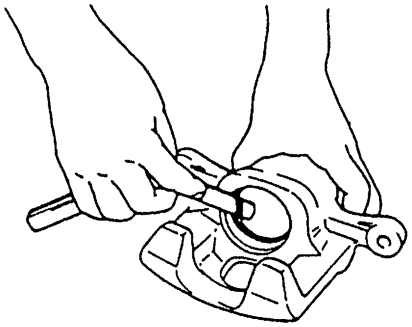

I2RH01420013-01

4) Remove bleeder plug and cap from caliper.

Assembly

Assemble parts in reverse order of disassembly, observing the following instructions.

⚠ **CAUTION**

- **Wash each part cleanly before installation in the same fluid as the one used in master cylinder reservoir.**
- **Never use other fluid or volatile solvent.**
- **Before installing piston seal and cylinder boot to cylinder, apply rubber grease included in piston seal set or brake fluid to them.**
- **Install a new piston seal into groove in cylinder securely making sure that it is not twisted.**
- **After reassembling brake lines, bleed air from them.**

Before installing caliper to carrier, install slide pins with rubber grease included in slide pin / boot set applied into caliper carrier hole and check for its smooth movement in thrust direction.

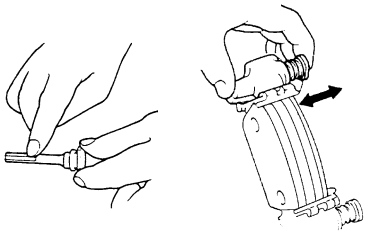

IYSQ01420021-01

Check all around piston for rust, corrosion and any other damage. If it is found faulty, replace piston or brake caliper.

I8RW01420002-01

- Install piston seal, boot and piston to caliper referring to the following instructions.

1) Replace with a new piston seal (1) at every overhaul. After applying rubber grease included in piston seal set or brake fluid, fit piston seal (1) into groove in cylinder taking care not to twist it.

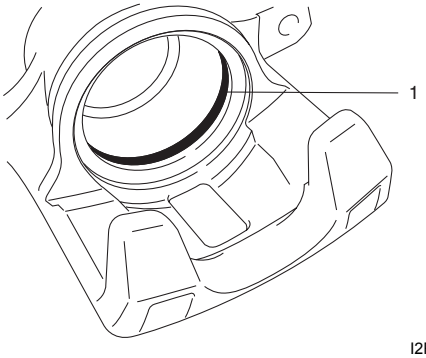

I2RH01420017-01

2) Before inserting piston (1) into cylinder, apply rubber grease included in piston seal set or brake fluid to new boot (a) and install it onto piston as shown.

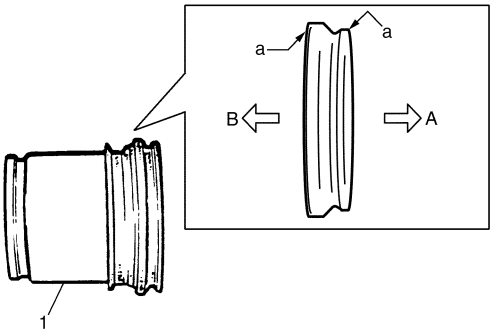

I4RS0B420015-01

A:	1 grooved side directed cylinder side
B:	2 grooved side directed pad side

3) Fit boot as it is in figure into boot groove in cylinder with fingers.

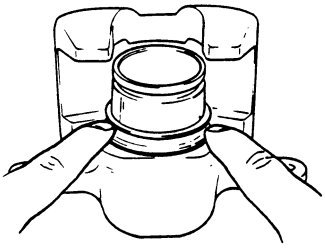

I2RH01420019-01

4) Insert piston into cylinder by hand and fit boot in boot groove in piston.

NOTE

Check that boot is fitted in boot groove securely all around piston and cylinder.

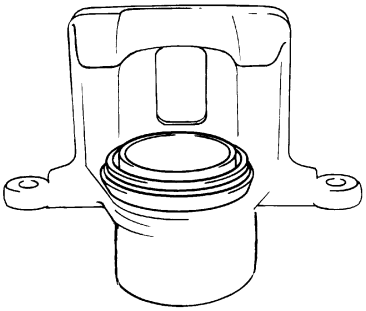

I2RH01420020-01

5) To confirm that boot is fitted in its groove in cylinder properly, pull piston out of cylinder a little but do not take it all out.

NOTE

Boot's face (1) should be at the same level from cylinder's face (2) all around.

6) Insert piston into cylinder by hand.

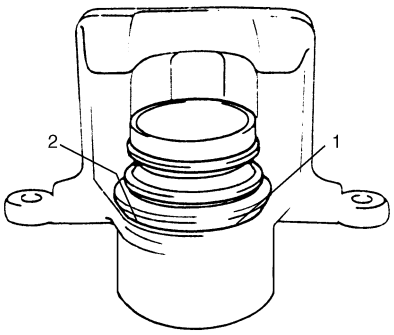

I4RS0A420004-01

Front Disc Brake Caliper Check

S7RW0A4206010

NOTE

Perform this check in the following case.

- **When replacing the brake pad with new one.**
- **When checking the thickness of brake pad.**
- **Before disassembling the brake caliper.**

Caliper (body) and Carrier

Check brake caliper body and carrier for deformation, crack, damage and rust. If defective, replace brake caliper and carrier.

Cylinder Boot

Check cylinder boot (1) for break, chap and brake fluid leak. If defective, overhaul or replace brake caliper.

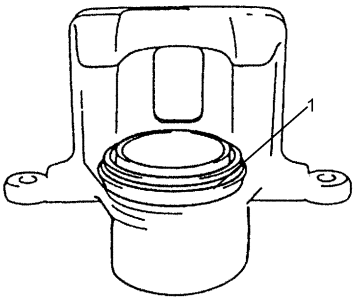

I8RW01420003-01

Slid pin

Before installing caliper to carrier, check for its smooth movement in thrust direction.
If defective, replace slide pin and boot.

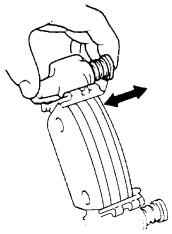

I8RW01420004-01

Front Brake Disc Removal and Installation

S7RW0A4206008

⚠ CAUTION

During removal, be careful not to damage brake flexible hose and not to depress brake pedal.

Removal

1) Hoist vehicle and remove front wheel.
2) Remove caliper assembly by removing caliper carrier bolts (2 pcs).

NOTE

Hang removed caliper with a wire hook or the like so as to prevent brake hose from bending and twisting excessively or being pulled.

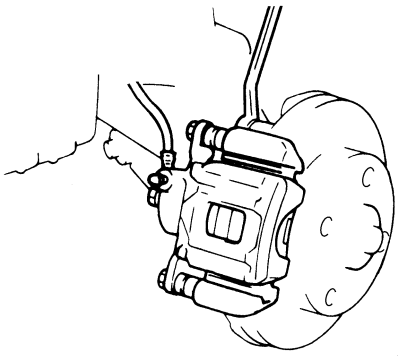

I4RS0B420010-01

3) Pull brake disc off by using 8 mm bolts (1) (2 pcs).

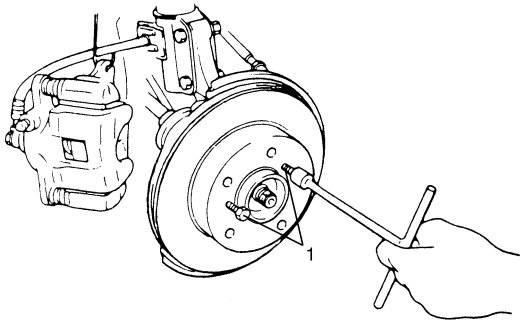

I5RW0A420003-01

Installation

1) Install caliper assembly to steering knuckle.

⚠ CAUTION

Make sure that flexible hose is not twisted when installing caliper assembly. If it is twisted, reinstall it using care not to twist it.

2) Tighten caliper carrier bolts to specified torque.

Tightening torque
Caliper carrier bolt (a): 85 N·m (8.5 kgf-m, 61.5 lb-ft)

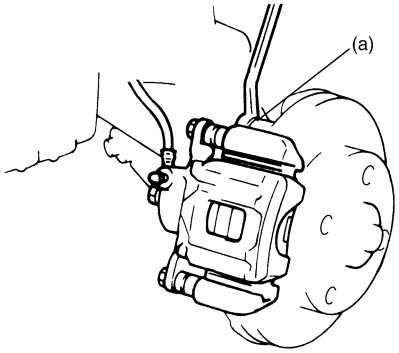

I4RS0B420012-01

3) Install front wheel referring to “Wheel (with Tire) Removal and Installation in Section 2D”.
4) Perform brake test.

Front Brake Disc Inspection

S7RW0A4206009

- Using magnetic stand and with dial gauge positioned at about 10 mm (0.39 in.) inward from periphery of disc, measure deflection of disc.
  If it exceeds the limit, correct or replace the brake disc.

Front brake disc deflection
Limit: 0.10 mm (0.004 in.) max.

Special tool
(A): 09900–20607
(B): 09900-20701

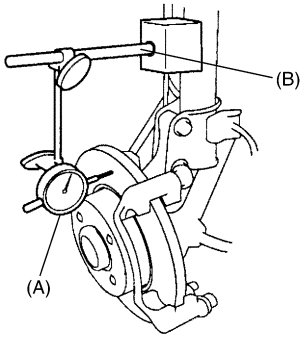

I4RS0B420013-01

- Using micrometer, measure thickness of brake disc.
  If it is less than limit, replace brake disc.

Front brake disc thickness “a”
Standard: 22.0 mm (0.87 in.)
Limit: 20.0 mm (0.79 in.)

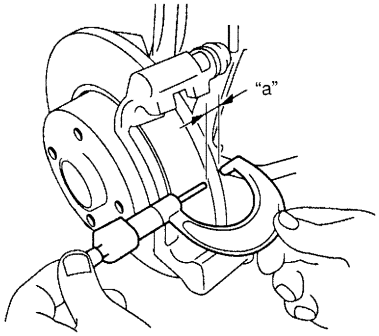

I4RS0B420014-01

Specifications

Tightening Torque Specifications

S7RW0A4207001

Fastening part	Tightening torque			Note
	N·m	kgf-m	lb-ft	
Caliper pin bolt	26	2.6	19.0	☞ / ☞
Flexible hose joint bolt	23	2.3	17.0	☞
Bleeder plug	9	0.9	6.5	☞
Caliper carrier bolt	85	8.5	61.5	☞

NOTE

The specified tightening torque is also described in the following.
“Front Disc Brake Components”

Reference:
For the tightening torque of fastener not specified in this section, refer to “Fasteners Information in Section 0A”.

Special Tools and Equipment

Recommended Service Material

S7RW0A4208001

NOTE

Required service material is also described in the following.
“Front Disc Brake Components”

Special Tool

S7RW0A4208002

09900–20607 Dial gauge ☞ 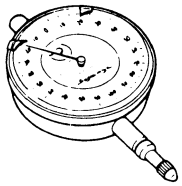	09900–20701 Magnetic stand ☞ 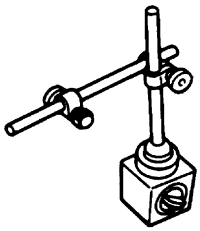

Rear Brakes

Repair Instructions

Rear Drum Brake Components

S7RW0A4306001

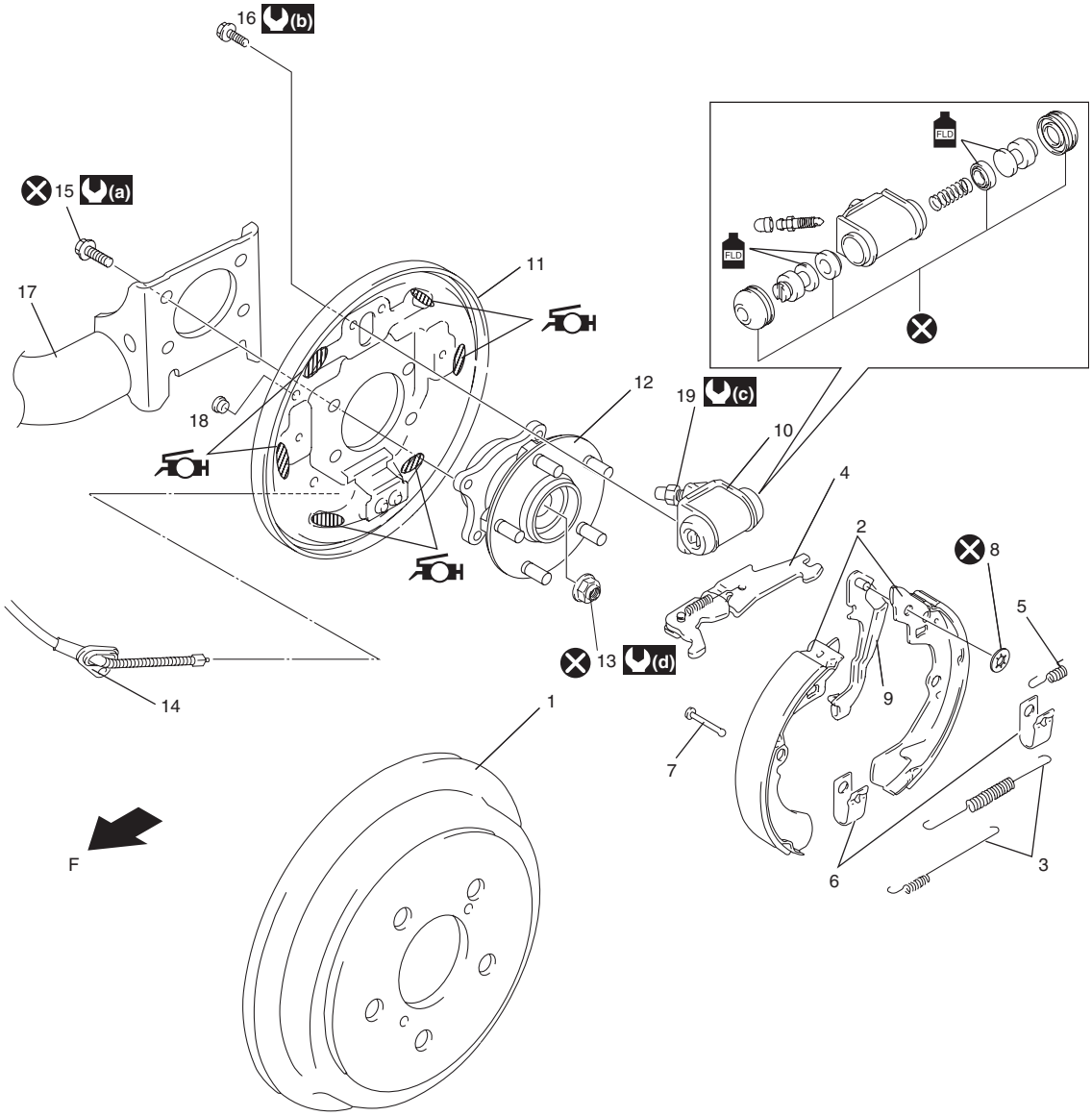

I6RW0D430001-01

1. Brake drum	10. Wheel cylinder	19. Bleeder plug
2. Brake shoe	11. Brake back plate	(a) : 73 N·m (7.3 kgf-m, 53 lb-ft)
3. Shoe return spring	12. Rear wheel hub	(b) : 12 N·m (1.2 kgf-m, 9.0 lb-ft)
4. Brake adjuster	13. Nut (4WD model)	(c) : 7 N·m (0.7 kgf-m, 5.0 lb-ft)
5. Antirattle spring	14. Parking cable	(d) : 175 N·m (17.5 kgf-m, 127.0 lb-ft)
6. Hold down spring	15. Rear wheel hub mounting bolt	: Heat-resistant brake grease
7. Shoe hold down pin	16. Wheel cylinder mounting bolt	: Do not reuse.
8. Push nut	17. Rear axle	FLD : Apply brake fluid
9. Brake shoe lever	18. Plug	F: Forward

Rear Brake Drum Removal and Installation

S7RW0A4306002

Removal

1) Hoist vehicle and remove rear wheel.
2) Release parking brake lever.
3) Remove brake drum (1) by using 8 mm bolts (2) (2 pcs).

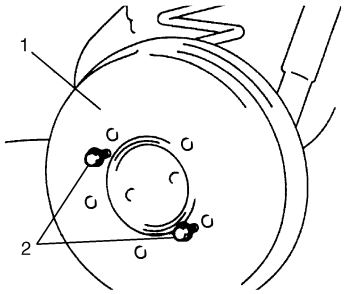

I7RW01431002-01

Installation

1) Before installing brake drum, to maximize brake shoe-to-drum clearance, put screwdriver between rod and ratchet and push down ratchet.

NOTE

The figure show ratchet position where brake shoe-to-drum clearance is maximum.

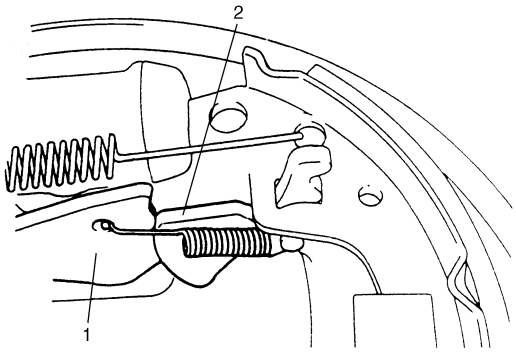

I2RH01430009-01

1. Rod	2. Ratchet

2) Confirm that inside of brake drum and brake shoes are free from dirt and oil. And then install brake drum.
3) Adjust parking brake cable referring to “Parking Brake Inspection and Adjustment in Section 4D”.
4) Install rear wheel.
5) Check to ensure that brake drum is free from dragging and proper braking is obtained. Perform brake test (foot brake and parking brake).

Rear Brake Drum and Shoe Inspection

S7RW0A4306003

Brake Drum

Inspect brake drum for wear.
If drum inner diameter is exceeds the limit or uneven or stepped wear is excessive, replace the drum.

Rear brake drum inner diameter “a”
Standard: 220 mm (8.66 in.)
Limit: 222 mm (8.74 in.)

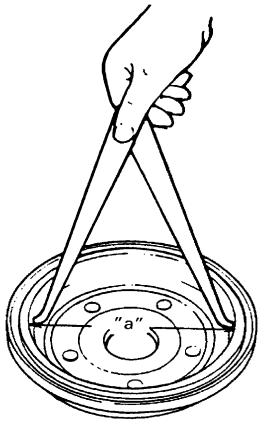

IYSQ01430007-01

Cracked, Scored or Grooved Drum

A cracked drum is unsafe for further service and must be replaced. Do not attempt to weld a cracked drum.
Smooth up any slight scores. Heavy or extensive scoring will cause excessive brake lining wear and it will probably be necessary to resurface drum braking surface.
If brake linings are slightly worn and drum is grooved, drum should be polished with fine emery cloth in the direction of drum depth but not circumferentially along drum inner.

NOTE

When drum is removed, visually inspect wheel cylinder for brake fluid leakage. Correct leaky point, if any.

Brake Shoe

⚠ CAUTION

Never polish lining with sandpaper. If lining is polished with sandpaper, hard particles of sandpaper will be deposited in lining and may damage drum. When it is required to correct lining, replace it with a new one.

Measure thickness of brake shoe (1). Also, check surface of lining for hardening, excessive wear.

Rear brake shoe lining thickness "a"
Standard: 4.0 mm (0.157 in.)
Limit: 1.0 mm (0.04 in.)

If necessary, replace new brake shoes.

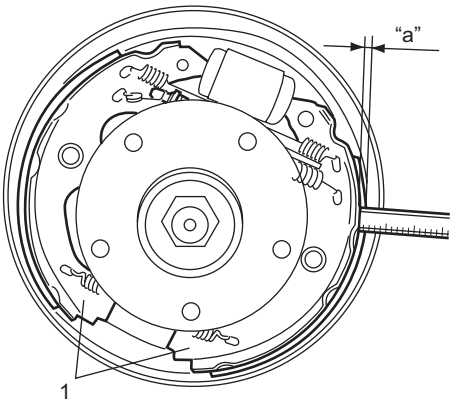

I8RW01431001-01

Rear Brake Shoe On-Vehicle Inspection

S7RW0A4306004

Amount of brake shoe wear can be checked as follows.

1) Hoist vehicle.
2) Remove rubber cover (plug) (1) from brake back plate.
3) Through hole of back plate, visually check for thickness of brake shoe lining (2). If lining thickness is less than specified wear limit, replace all brake shoes with new ones.

   Lining thickness "a"
   Service limit: 1.0 mm (0.04 in.)

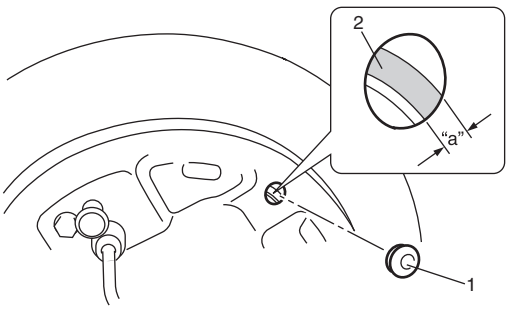

I4RS0B430004-01

Rear Brake Shoe Removal and Installation

S7RW0A4306005

NOTE

When replacing brake shoe, replace it on the right and left.

Removal

1) Remove brake drum referring to "Rear Brake Drum Removal and Installation".
2) Push and rotate 90° hold down pin (1) and remove hold down pin (1) and hold down spring (2).

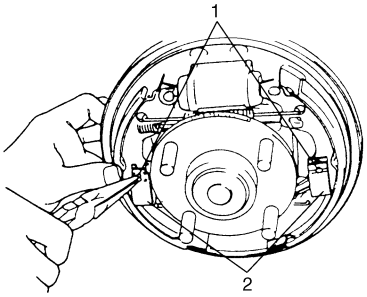

I7RW01431003-01

3) Remove return springs, brake shoes and adjuster.
4) Disconnect parking brake shoe lever (1) from parking brake cable (2).

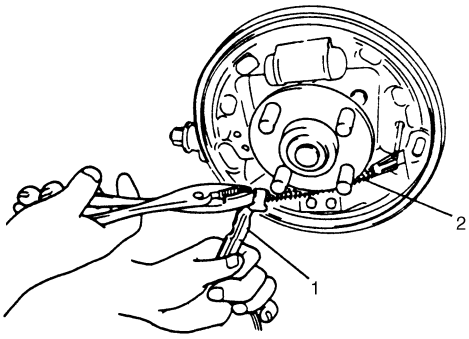

I2RH01430013-01

5) Remove push nut (1).
6) Remove parking brake shoe lever (2) from shoe rim (3).

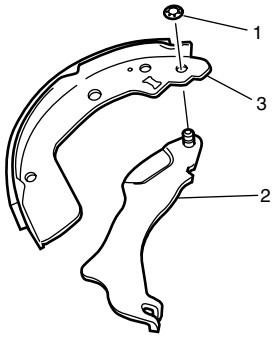

I4RS0A430014-01

Installation

Install parts in reverse order of removal, noting the following.

- Before installing rear brake shoe to brake back plate, clean brake back plate and apply heat-resistance brake grease to A on which shoe rims rest.

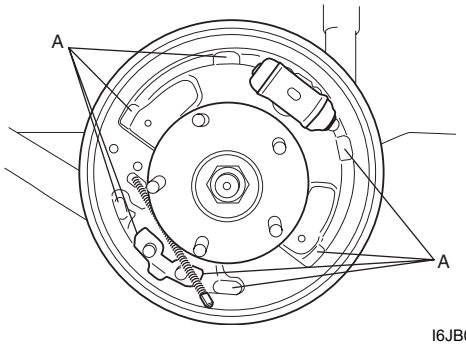

I6JB0A430002-01

- Push and rotate 90° hold down pin and install hold down pin and hold down spring.
- Install brake drum referring to “Rear Brake Drum Removal and Installation”.

Rear Brake Adjuster and Shoe Lever Check

S7RW0A4306006

- Check ratchet of brake adjuster (1) assembly for wear or damage.
- Check shoe return spring, antirattle spring, quadrant spring and shoe hold down spring for damage, corrosion and weakening.
- Check for smooth movement of brake shoe lever (2) along shoe rim.

If any defective or malfunction is found, repair or replace.

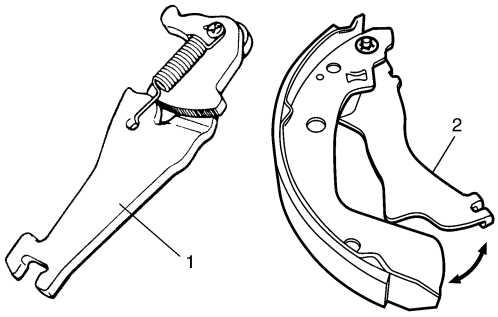

I4RS0A430016-01

Wheel Cylinder Removal and Installation

S7RW0A4306007

⚠ CAUTION

Do not allow brake fluid to get on painted surfaces. Painted surfaces will be damaged by brake fluid, flush it with water immediately if any fluid is spilled.

Removal

1) Remove brake drum referring to “Rear Brake Drum Removal and Installation”.
2) Remove brake shoe referring to “Rear Brake Shoe Removal and Installation”.
3) Loosen brake pipe flare nut (1) but only within the extent that fluid does not leak.
4) Remove wheel cylinder mounting bolt (3). Disconnect brake pipe from wheel cylinder and put bleeder plug cap (2) onto pipe to prevent fluid from spilling.

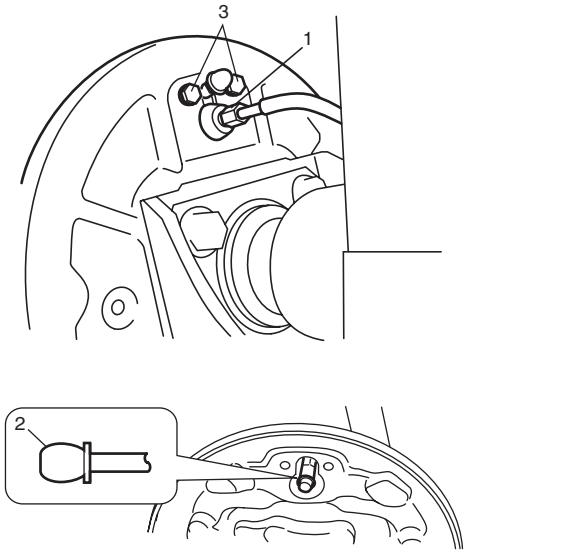

I7RW01431004-01

Installation

1) Take off bleeder plug cap from brake pipe and connect pipe to wheel cylinder (1) just enough to prevent fluid from leaking.
2) Install wheel cylinder (1) to brake back plate (2), and tighten wheel cylinder mounting bolt to specified torque.

   Tightening torque
   Wheel cylinder mounting bolt (a): 12 N·m (1.2 kgf-m, 9.0 lb-ft)

3) Tighten flare nut of brake pipe (3) to specified torque.

   Tightening torque
   Rear brake pipe flare nut (b): 16 N·m (1.6 kgf-m, 12.0 lb-ft)

4) Install bleeder plug cap (4) taken off from pipe back to bleeder plug.

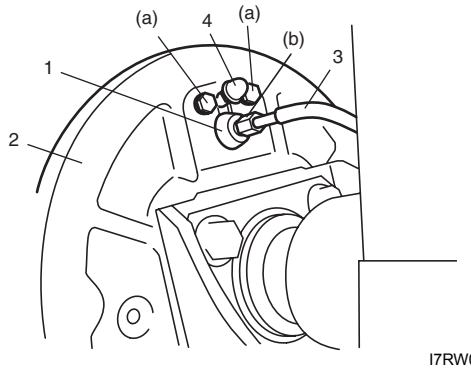

I7RW01431005-01

5) Install brake shoes. Refer to “Rear Brake Shoe Removal and Installation”.
6) Install brake drum. Refer to “Rear Brake Drum Removal and Installation”.
7) Fill reservoir with brake fluid and bleed brake system. For bleeding operation refer to “Air Bleeding of Brake System in Section 4A”.
8) Adjust parking brake cable referring to “Parking Brake Inspection and Adjustment in Section 4D”.
9) Install rear wheel.
10) Check to ensure that brake drum is free from dragging and proper braking is obtained. Remove vehicle from hoist and perform brake test (foot brake and parking brake).

Wheel Cylinder Inspection

S7RW0A4306008

Inspect wheel cylinder disassembled parts for wear, cracks, corrosion or damage.

NOTE

Clean wheel cylinder components with brake fluid.

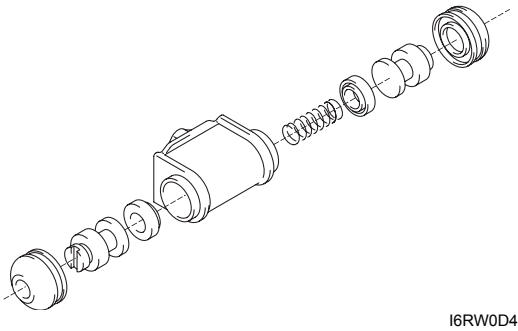

I6RW0D430002-02

Brake Back Plate Removal and Installation

S7RW0A4306009

Removal

1) Remove rear wheel hub referring to “Rear Wheel Hub Assembly Removal and Installation in Section 2C”.
2) Remove parking brake cable (1) from brake back plate.

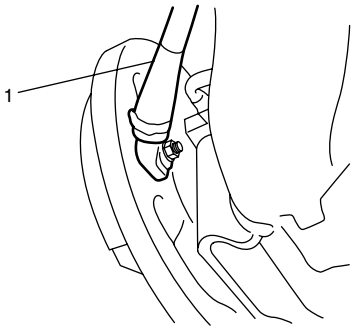

I4RS0A430020-01

3) Remove wheel cylinder from brake back plate referring to “Wheel Cylinder Removal and Installation”.

Installation

Install brake back plate by reversing removal procedure, noting the instructions.

⚠ CAUTION

Never reuse rear wheel hub mounting bolts.

- Install rear wheel hub and brake back plate, and then tighten mounting bolt. Refer to “Rear Drum Brake Components”.
- Install parking brake cable (1) to brake back plate.

  Tightening torque
  Parking cable cap nut (a): 11 N·m (1.1 kgf-m, 8.0 lb-ft)

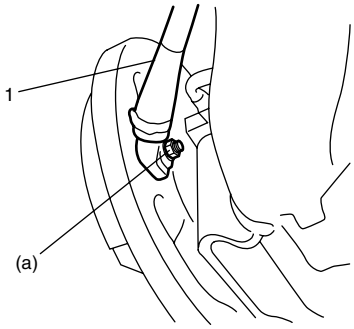

I4RS0A430024-01

- After installing all removed parts, bleed air from brake system referring to “Air Bleeding of Brake System in Section 4A”. and then adjust parking brake cable referring to “Parking Brake Inspection and Adjustment in Section 4D”.

Specifications

Tightening Torque Specifications

S7RW0A4307001

Fastening part	Tightening torque			Note
	N·m	kgf-m	lb-ft	
Wheel cylinder mounting bolt	12	1.2	9.0	☞
Rear brake pipe flare nut	16	1.6	12.0	☞
Parking cable cap nut	11	1.1	8.0	☞

NOTE

The specified tightening torque is also described in the following.
“Rear Drum Brake Components”

Reference:
For the tightening torque of fastener not specified in this section, refer to “Fasteners Information in Section 0A”.

Special Tools and Equipment

Recommended Service Material

S7RW0A4308001

NOTE

Required service material is also described in the following.
“Rear Drum Brake Components”

Parking Brake

Repair Instructions

Parking Brake Cable Components

S7RW0A4406004

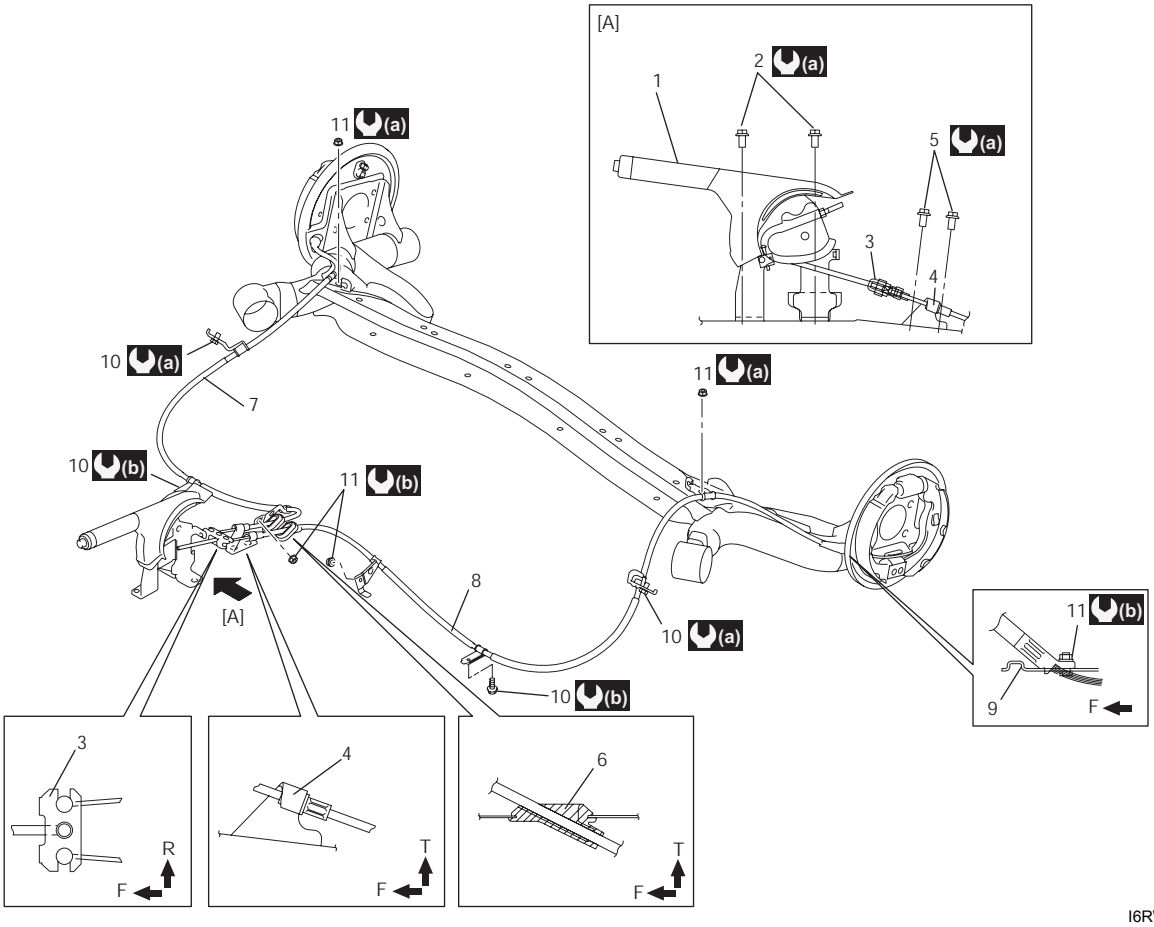

I6RW0D440001-01

T: Top side	3. Equalizer	8. Parking brake cable left	(a) : 26 N·m (2.6 kgf-m, 19.0 lb-ft)
F: Forward side	4. Parking cable bracket	9. Brake back plate	(b) : 11 N·m (1.1 kgf-m, 8.0 lb-ft)
R: Right side	5. Parking cable bracket bolt	10. Parking cable clamp bolt	
1. Parking brake lever assembly	6. Grommet	11. Parking cable clamp nut	
2. Parking brake lever bolt	7. Parking brake cable right	[A]: View [A]	

Parking Brake Inspection and Adjustment

S7RW0A4406001

Inspection

Hold center of parking brake lever grip and pull it up with 200 N (20 kg, 44 lbs) force.
With parking brake lever pulled up as shown, count ratchet notches. There should be 4 – 9 notches.
Also, check if both right and left rear wheels are locked firmly.
To count number of notches easily, listen to click sounds that ratchet makes while pulling parking brake lever without pressing its button.
One click sound corresponds to one notch.
If number of notches is out of specification, adjust cable referring to adjustment procedure so as to obtain specified parking brake stroke.

NOTE

Check tooth tip of each notch for damage or wear.
If any damage or wear is found, replace parking brake lever.

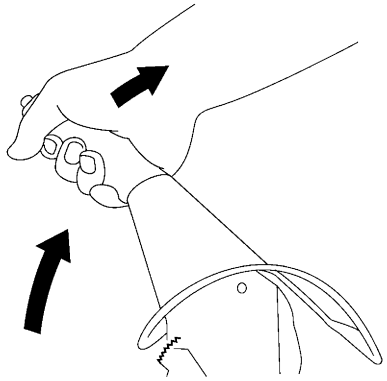

I4RS0B440002-01

Adjustment

NOTE

Make sure for the following conditions before cable adjustment.

- **No air is trapped in brake system.**
- **Brake pedal travel is proper.**
- **Start engine and then brake pedal has been depressed at least 3 times with about 150 N (15 kg, 33 lbs) load.**
- **Parking brake lever has been pulled up a few times with about 200 N (20 kg, 44 lbs) load.**
  If parking brake cable is replaced with new one, pull up parking brake lever a few times with about 500 N (50 kg, 110 lbs) force.

After confirming that the conditions are all satisfied, adjust parking brake lever stroke by loosening or tightening adjust nut (1).

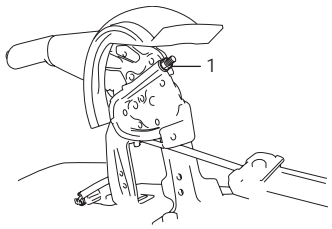

I6RW0C440002-01

NOTE

Check brake drum for dragging after adjustment.

Parking brake stroke
When lever is pulled up at 200 N (20 kg, 44 lbs): 4 to 9 notches

Parking Brake Cable Removal and Installation

S7RW0A4406002

Removal

NOTE

When it is necessary to remove both right and left parking brake cables, repeat below steps 2) and 6) on right and left wheels.

1) Hoist vehicle.
2) Remove wheel.
3) Disconnect parking brake cable from equalizer (parking brake lever) and clamps.
4) Remove brake drum. Refer to “Rear Brake Drum Removal and Installation in Section 4C”.
5) Disconnect parking brake cable from brake shoe lever referring to “Rear Brake Shoe Removal and Installation in Section 4C”.
6) Remove parking brake cable and parking cable bracket.

Installation

Install it by reversing removal procedure, noting the following points.

- Install clamps properly referring to “Parking Brake Cable Components”.
- Tighten bolts and nuts to specified torque referring to “Parking Brake Cable Components”.
- Adjust parking brake cable. Refer to “Parking Brake Inspection and Adjustment”.
- Check brake drum for dragging and brake system for proper performance. Brake test should be performed.

Parking Brake Lever Removal and Installation

S7RW0A4406003

Removal

1) Remove console box.
2) Block vehicle wheels and release parking brake lever.
3) Disconnect lead wire of parking brake switch at coupler.
4) Loosen parking brake cable adjusting nut (1).

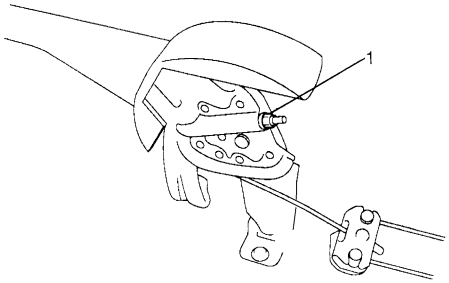

I4RS0A440004-01

5) Remove parking brake lever bolts (1) and then remove parking brake lever assembly (2) with equalizer (3).

NOTE

Don't disassemble parking brake lever switch. It must be removed and installed as a complete switch assembly.

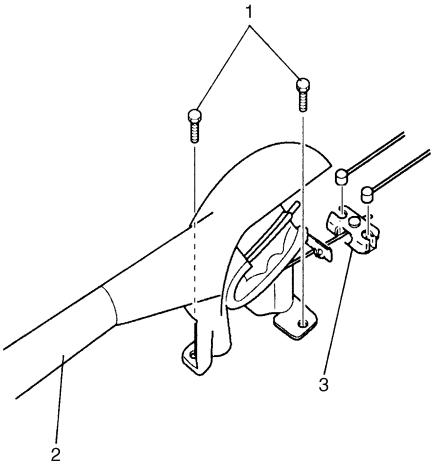

I5RW0A440002-01

Installation

1) Install in reverse order of removal procedure. Check equalizer inclined angle.

Tightening torque
Parking brake lever bolt (a): 26 N·m (2.6 kgf-m, 19.0 lb-ft)

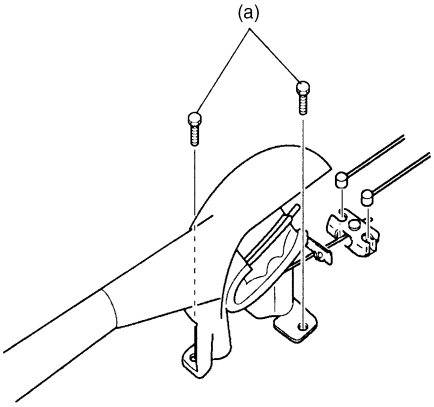

I5RW0A440003-01

2) After all parts are installed, parking brake lever needs to be adjusted. Refer to "Parking Brake Inspection and Adjustment".
3) Check brake drum for dragging and brake system for proper performance. After removing vehicle from hoist, brake test should be performed.

Specifications

Tightening Torque Specifications

S7RW0A4407001

Fastening part	Tightening torque			Note
	N·m	kgf-m	lb-ft	
Parking brake lever bolt	26	2.6	19.0	☞

NOTE

The specified tightening torque is also described in the following.
“Parking Brake Cable Components”

Reference:
For the tightening torque of fastener not specified in this section, refer to “Fasteners Information in Section 0A”.

ABS

Precautions

Precautions in Diagnosing Troubles

S7RW0A4500001

To ensure that the trouble diagnosis is done accurately and smoothly, observe the following and follow “ABS Check”.

- Diagnostic information stored in ABS control module memory can be cleared as well as checked by using SUZUKI scan tool. Before using scan tool, read its Operator's (Instruction) Manual carefully to have good understanding as to what functions are available and how to use it.
- If the vehicle was operated in any of the following ways, ABS warning light may light momentarily but this does not indicate anything abnormal in ABS.
  - The vehicle was driven with parking brake pulled.
  - The vehicle was driven with brake dragging.
  - The vehicle was stuck in mud, sand, etc.
  - Wheel spin occurred while driving.
  - Wheel(s) was rotated while the vehicle was jacked up.
- Be sure to read “Precautions for Electrical Circuit Service in Section 00” and “Precaution for CAN Communication System in Section 00” before inspection and observe what is written there.
- Be sure to use the trouble diagnosis procedure as described in “ABS Check”. Failure to follow it may result in incorrect diagnosis. (Some other diagnosis trouble code may be stored by mistake in the memory of ABS control module during inspection.)
- When disconnecting ABS hydraulic unit / control module connector (1), pull up lock lever (2) of connector.
  When connecting, set the connector on ABS hydraulic unit / control module assembly and pull down the lock lever (2) until it locks.

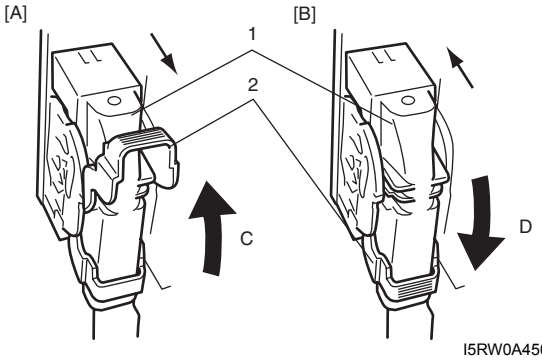

I5RW0A450001-01

[A]: Disconnect	C: Pull up to disconnect
[B]: Connect	D: Pull down to connect

- Communication of ECM, BCM, combination meter, 4WD control module (if equipped), keyless start control module (if equipped), TCM (if equipped), data link connector and ABS control module is established by CAN (Control Area Network).
  Therefore, be sure to read “Precautions for Installing Mobile Communication Equipment in Section 00” before inspection and handling CAN communication line.

Precautions in On-Vehicle Service

S7RW0A4500002

When connector is connected to ABS hydraulic unit / control module assembly, do not disconnect connectors of sensors with ignition switch ON. Otherwise, DTC will be set in ABS control module.

General Description

ABS Description

S7RW0A4501001

The ABS (Antilock Brake System) controls the fluid pressure applied to the wheel cylinder of each brake from the master cylinder so that each wheel is not locked even when hard braking is applied.
This ABS has also the following function.
While braking is applied, but before ABS control becomes effective, braking force is distributed between the front and rear so as to prevent the rear wheels from being locked too early for better stability of the vehicle.
The main component parts of this ABS include the following parts in addition to those of the conventional brake system.

- Wheel speed sensor which senses revolution speed of each wheel and outputs its signal.
  Rear wheel speed sensor of 4WD vehicle is integrated in rear wheel hub assembly and supplied as rear wheel hub assembly part.
  Front wheel speed sensor and rear wheel speed sensor of 2WD model are separated from wheel hub assembly and supplied as spare parts.
- ABS warning light which lights to inform abnormality when system fails to operate properly.
- ABS hydraulic unit / control module assembly is incorporated ABS control module, ABS hydraulic unit (actuator assembly), solenoid valve power supply driver (transistor), solenoid valve driver (transistor), pump motor driver (transistor).
  - ABS control module which sends operation signal to ABS hydraulic unit to control fluid pressure applied to each wheel cylinder based on signal from each wheel speed sensor so as to prevent wheel from locking.
  - ABS hydraulic unit which operates according to signal from ABS control module to control fluid pressure applied to wheel cylinder of each 4 wheels.
  - Solenoid valve power supply driver (transistor) which supplies power to solenoid valve in ABS hydraulic unit.
  - Solenoid valve driver (transistor) which controls each solenoid valves in ABS hydraulic unit.
  - Pump motor driver (transistor) which supplies power to pump motor in ABS hydraulic unit.
- G sensor which detects body deceleration speed for 4WD model.

This ABS is equipped with Electronic Brake force Distribution (EBD) system that controls a fluid pressure of rear wheels to best condition, which is the same function as that of proportioning valve, by the signal from wheel sensor independently of change of load due to load capacity and so on. And if the EBD system fails to operate properly, the brake warning light lights to inform abnormality.

ABS Hydraulic Unit / Control Module Assembly Description

S7RW0A4501002

ABS control module is a component of ABS hydraulic unit / control module assembly and has the following functions.

Self-Diagnosis Function

ABS control module diagnoses conditions of the system component parts (whether or not there is any abnormality) all the time and indicates the results (warning of abnormality occurrence and DTC) through the ABS warning light as described.

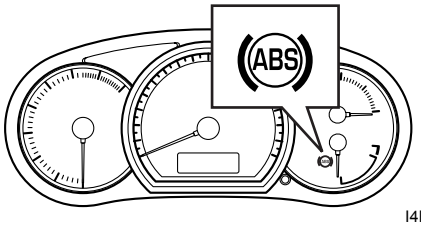

I4RS0A450001-01

- When ignition switch is turned ON, ABS warning light lights for 2 seconds to check its circuit.
- When no abnormality has been detected (the system is in good condition), ABS warning light turns OFF after 2 seconds.
- When an abnormality in the system is detected, ABS warning light lights and the area where that abnormality lies is stored in the memory of EEPROM in ABS control module.

CAN Communication System Description

S7RW0A4501003

Refer to “CAN Communication System Description in Section 1A” for CAN communication system description. ABS control module communicates control data with each control module as follows.

ABS Control Module Transmission Data

				ECM	Combination Meter	4WD control module
ABS control module	Transmit	DATA	Wheel speed signal (Front-right)	○		○
			Wheel speed signal (Front-left)	○		○
			Wheel speed signal (Rear-right)			○
			Wheel speed signal (Rear-left)			○
			ABS active	○		○
			ABS indication		○	
			EBD indication		○	

I7RW01450001-06

Schematic and Routing Diagram

ABS Schematic

S7RW0A4502001

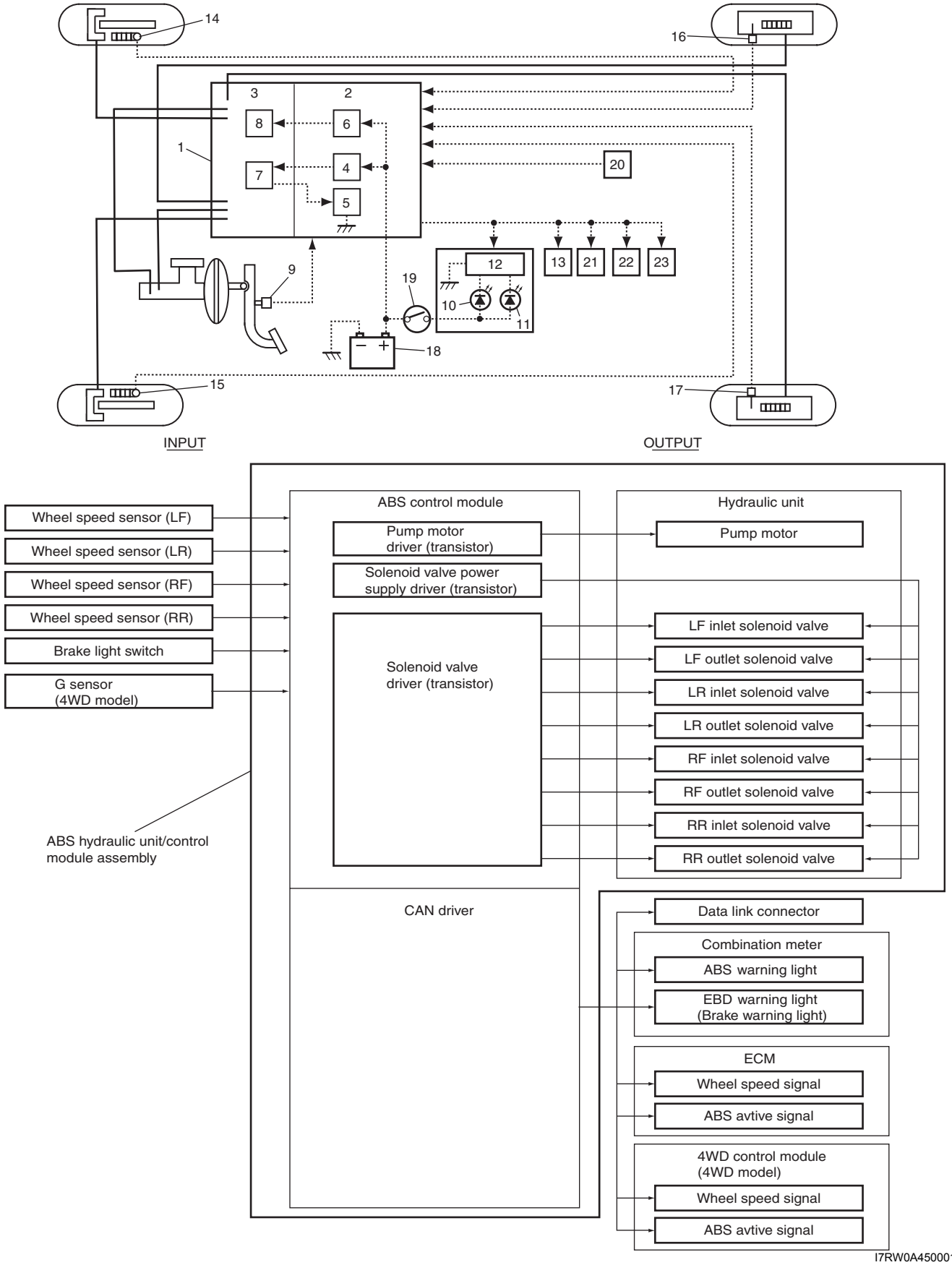

I7RW0A450001-01

1. ABS hydraulic unit / control module assembly	9. Brake light switch	17. Wheel speed sensor (Left-rear)
2. ABS control module	10. ABS warning light	18. Battery
3. ABS hydraulic unit	11. EBD warning light (Brake warning light)	19. Ignition switch
4. Solenoid valve power supply driver (transistor)	12. Light driver module	20. G sensor (4WD model)
5. Solenoid valve driver (transistor)	13. Data link connector	21. ECM
6. Pump motor driver (transistor)	14. Wheel speed sensor (Right-front)	22. Combination meter
7. Solenoid valve	15. Wheel speed sensor (Left-front)	23. 4WD control module
8. Pump motor	16. Wheel speed sensor (Right-rear)	

ABS Wiring Circuit Diagram

S7RW0A4502002

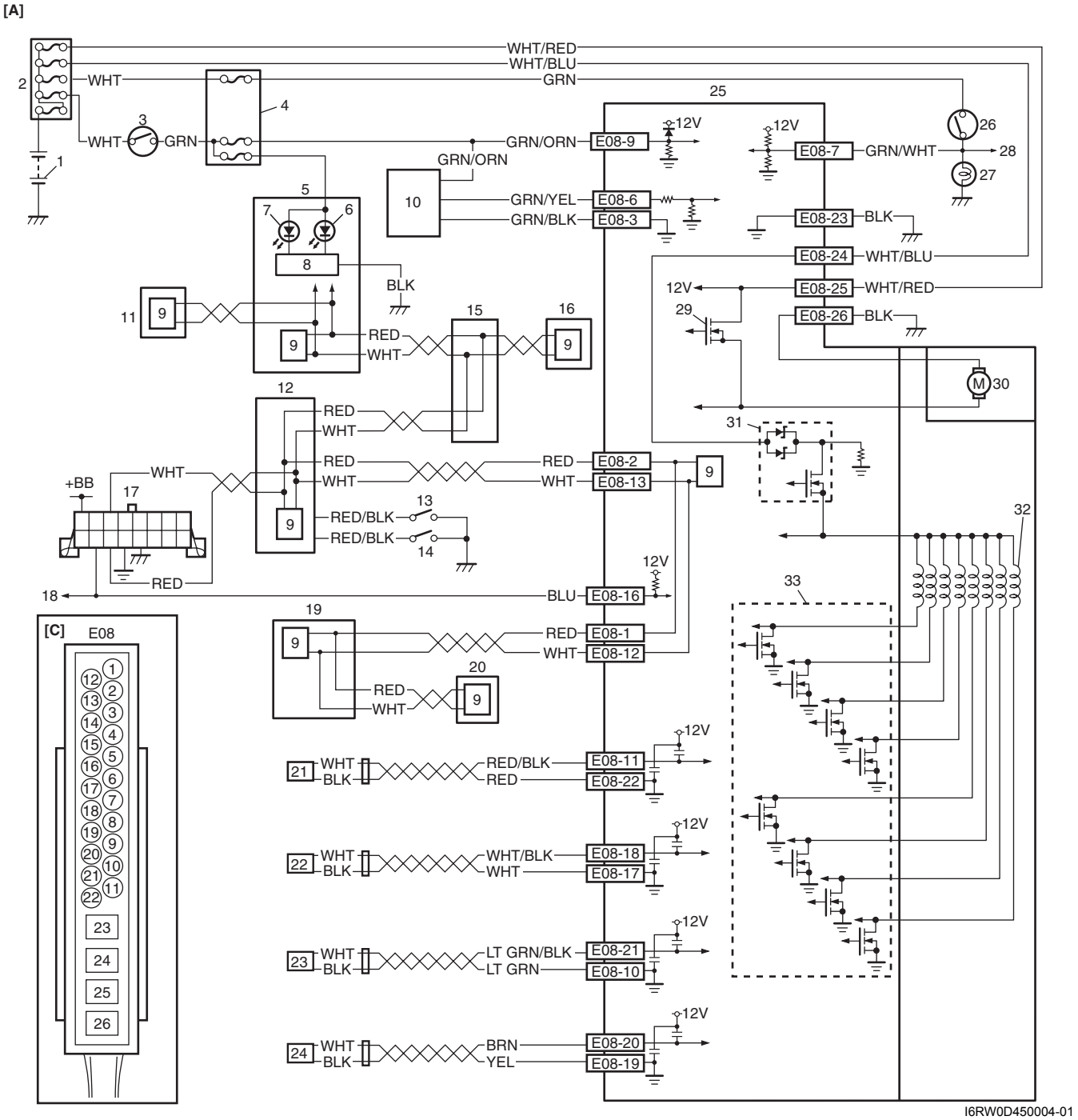

[B]

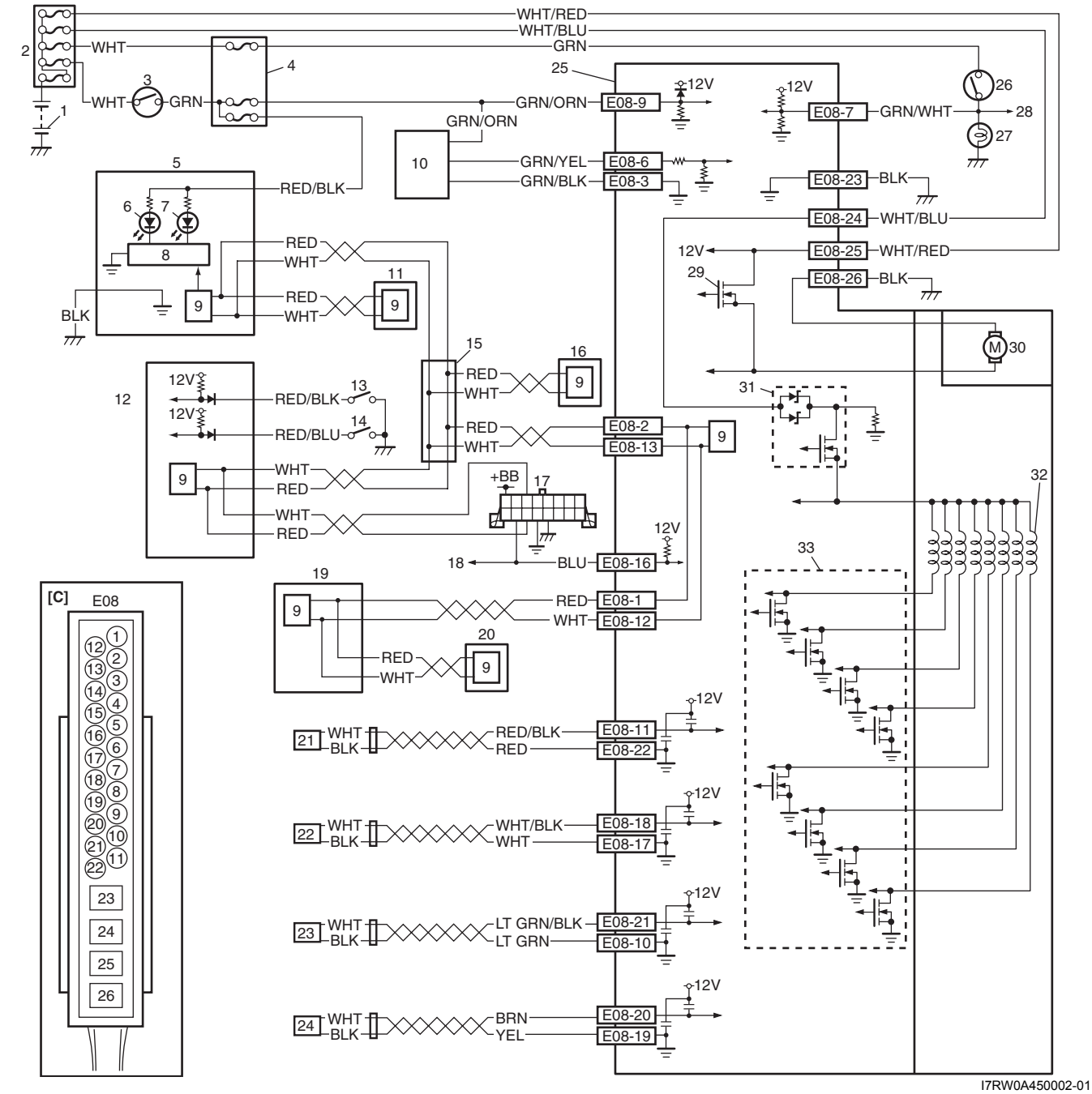

I7RW0A450002-01

[A]: Junction block with BCM	10. G sensor (4WD model)	22. Right-front wheel speed sensor
[B]: Junction block without BCM	11. 4WD control module	23. Left-rear wheel speed sensor
[C]: Terminal arrangement of ABS control module connector (viewed from terminal side)	12. BCM	24. Right-rear wheel speed sensor
1. Battery	13. Brake fluid level switch	25. ABS hydraulic unit / control module assembly
2. Main fuse box	14. Parking brake switch	26. Brake light switch
3. Ignition switch	15. CAN junction connector	27. Brake light
4. Junction block assembly	16. Keyless start control module	28. To ECM and shift lock relay (A/T model)
5. Combination meter	17. Data link connector (DLC)	29. Pump motor driver (transistor)
6. ABS warning light	18. To BCM, 4WD control module, P/S control module, HVAC control module (auto A/C model) and SDM	30. Pump motor
7. EBD warning light (brake warning light)	19. ECM	31. Solenoid valve power supply driver
8. Light driver module	20. TCM (A/T model)	32. Solenoid valve
9. CAN driver	21. Left-front wheel speed sensor	33. Solenoid valve driver (transistor)

Terminal		Circuit
E08	1	CAN communication line (high) for ECM
	2	CAN communication line (high) for BCM
	3	G sensor ground (4WD model)
	4	—
	5	—
	6	G sensor signal (4WD mode)
	7	Brake light switch
	8	—
	9	Ignition switch
	10	Left-rear wheel speed sensor (–)
	11	Left-front wheel speed sensor (+)
	12	CAN communication line (low) for ECM
	13	CAN communication line (low) for BCM
	14	—
	15	—
	16	Data link connector
	17	Right-front wheel speed sensor (–)
	18	Right-front wheel speed sensor (+)
	19	Right-rear wheel speed sensor (–)
	20	Right-rear wheel speed sensor (+)
	21	Left-rear wheel speed sensor (+)
	22	Left-front wheel speed sensor (–)
	23	Ground for solenoid valve
	24	Power supply for solenoid valve
	25	Power supply for pump motor
	26	Ground for pump motor

Component Location

ABS Components Location

S7RW0A4503001

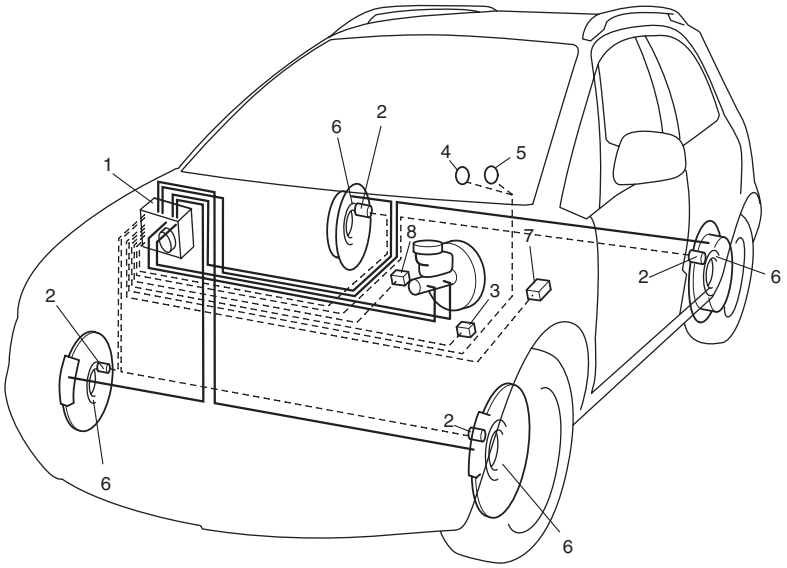

I5RW0A450006-02

1. ABS hydraulic unit / control module assembly	5. EBD warning light (Brake warning light)
2. Wheel speed sensors	6. Wheel speed sensor encoder (included in wheel hub assembly)
3. Brake light switch	7. Data link connector
4. ABS warning light	8. G sensor (4WD model)

Diagnostic Information and Procedures

ABS Check

S7RW0A4504001

Refer to the following items for the details of each step.

Step	Action	Yes	No
1	☞ **Malfunction analysis** 1) Perform “Customer complaint analysis: ”. 2) Perform “Problem symptom confirmation: ”. 3) Perform “DTC check, record and clearance: ” and recheck DTC. *Is there any malfunction DTC?*	Go to Step 4.	Go to Step 2.
2	☞ **Driving test** 1) Perform “Step 2: Driving Test: ”. *Is trouble symptom identified?*	Go to Step 3.	Go to Step 6.
3	☞ **DTC check** 1) Perform “DTC Check”. *Is it malfunction code?*	Go to Step 4.	Go to Step 5.
4	☞ **ABS check** 1) Inspect and repair referring to applicable DTC flow. *Does trouble recur?*	Go to Step 5.	Go to Step 7.
5	☞ **Brakes diagnosis** 1) Inspect and repair referring to “Brakes Symptom Diagnosis in Section 4A”. *Does trouble recur?*	Go to Step 3.	Go to Step 7.
6	☞ **Check for intermittent problem** 1) Check intermittent troubles referring to “Intermittent and Poor Connection Inspection in Section 00” and related circuit of trouble code recorded in Step 1. *Does trouble recur?*	Go to Step 4.	Go to Step 7.
7	☞ **Final confirmation test** 1) Perform “Step 7: Final Confirmation Test: ”. *Does trouble recur?*	Go to Step 3.	End.

Step 1: Malfunction Analysis

Customer complaint analysis

Record details of the problem (failure, complaint) and how it occurred as described by the customer.
For this purpose, use of such a questionnaire form as shown in the following will facilitate collecting information to the point required for proper analysis and diagnosis.

Customer questionnaire (Example)

Customer's name:	Model:	VIN:	
Date of issue:	Date of Reg:	Date of problem:	Mileage:

Problem Symptoms	• ABS warning light abnormal: fails to turn on/fails to go off/flashes • Abnormal noise while vehicle is running: from motor, from valve, other_____ • Wheel is locked at braking: • Pump motor does not stop (running): • Braking does not work: • Other:
Frequency of occurrence	• Continuous/Intermittent (times a day, a month)/ other_____
Conditions for Occurrence of Problem	• Vehicle at stop & ignition switch ON: • When starting: at initial start only/at every start/Other_____ • Vehicle speed: while accelerating/while decelerating/at stop/ while turning/while running at constant speed/ other_____ • Road surface condition: Paved road/rough road/snow-covered road/ other_____ • Chain equipment:
Environmental Condition	• Weather: fair/cloudy/rain/snow/other_____ • Temperature: °F (°C)
Diagnostic Trouble Code	• First check: Normal code/malfunction code ( ) • Second check after test drive: Normal code/malfunction code ( )

I7RW0A450003-01

Problem symptom confirmation
Check if what the customer claimed in “Customer Questionnaire” is actually found in the vehicle and if that symptom is found, whether it is identified as a failure. (This step should be shared with the customer if possible.) Check warning lights related to brake system referring to “EBD Warning Light (Brake Warning Light) Check” and “ABS Warning Light Check”.

DTC check, record and clearance
Perform “DTC Check” procedure, record it and then clear it referring to “DTC Clearance”.
Recheck DTC referring to “DTC Check”.
When DTC which is recorded at DTC check procedure is detected again after performing DTC clearance, go to “Step 4: ABS Check: ” to proceed the diagnosis.
When DTC which is recorded at DTC check procedure is not indicated anymore after performing DTC clearance, ABS control module does not perform the system diagnosis, or temporary abnormality may occur, therefore go to “Step 2: Driving Test: ” to proceed the diagnosis.

Step 2: Driving Test
Test drive the vehicle at 40 km/h (25 MPH) for more than a minute and check if any trouble symptom (such as abnormal lighting of ABS warning light) exists.
If the malfunction DTC is confirmed again at ignition switch ON, driving test as described is not necessary. Proceed to Step 3.

Step 3: DTC Check
Recheck DTC referring to “DTC Check”.

Step 4: ABS Check
According to ABS Check for the DTC confirmation in Step 3, locate the cause of the trouble, namely in a sensor, switch, wire harness, connector, actuator assembly or other part and repair or replace faulty parts.

Step 5: Brakes Diagnosis
Check the parts or system suspected as a possible cause referring to “Brakes Symptom Diagnosis in Section 4A” and based on symptoms appearing on the vehicle (symptom obtained through Steps 1 and 2 and repair or replace faulty parts, if any).

Step 6: Check for Intermittent Problem
Check parts where an intermittent trouble is easy to occur (e.g., wire harness, connector, etc.), referring to “Intermittent and Poor Connection Inspection in Section 00” and related circuit of trouble code recorded in Step 1 to 3.

Step 7: Final Confirmation Test
Confirm that the problem symptom has gone and the ABS is free from any abnormal conditions. If what has been repaired is related to the malfunction DTC, clear the DTC once referring to “DTC Clearance” and perform test driving and confirm that no DTC is indicated.

ABS Warning Light Check

S7RW0A4504002

1) Turn ignition switch ON.
2) Check that ABS warning light (1) comes ON for about 2 seconds and then goes off.
   If any faulty condition is found, advance to “ABS Warning Light Does Not Come ON at Ignition Switch ON” or “ABS Warning Light Comes ON Steady”.

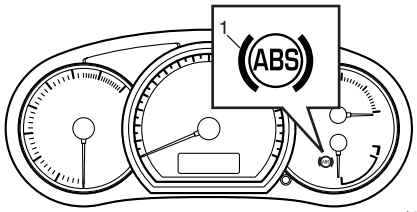

I4RS0A450007-01

EBD Warning Light (Brake Warning Light) Check

S7RW0A4504003

NOTE

Perform this check on a level place.

1) Turn ignition switch ON with parking brake applied.
2) Check that EBD warning light (brake warning light) (1) is turned ON.
3) Release parking brake with ignition switch ON and check that EBD warning light (brake warning light) goes off.
   If it doesn’t go off, go to “EBD Warning Light (Brake Warning Light) Comes ON Steady”.

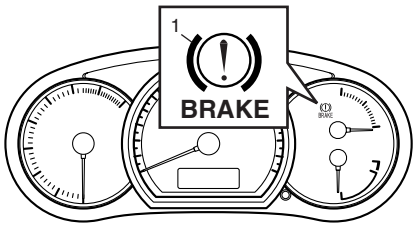

I4RS0A450008-01

DTC Check

S7RW0A4504004

1) Turn ignition switch to OFF position.
2) Connect SUZUKI scan tool to data link connector (1).

Special tool
(A): SUZUKI scan tool

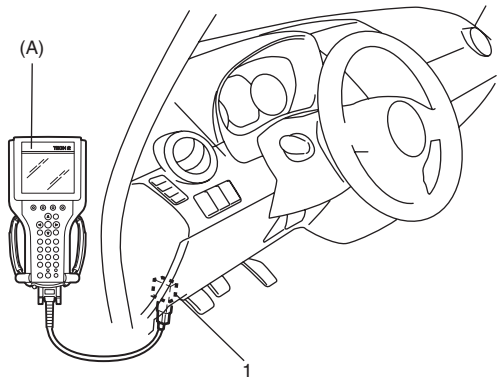

I5RW0A450007-01

3) Turn ignition switch to ON position.
4) Read DTC according to instructions displayed on SUZUKI scan tool and print it or write it down. Refer to SUZUKI scan tool operator's manual for further details.

NOTE

If SUZUKI scan tool can not communicate ABS hydraulic unit / control module, perform "Serial Data Link Circuit Check".

5) After completing the check, turn ignition switch off and disconnect SUZUKI scan tool from DLC.

DTC Table

S7RW0A4504005

⚠ CAUTION

Be sure to perform "ABS Check" before starting diagnosis.

DTC (displayed on SUZUKI scan tool)	Diagnostic Items	
NO DTC	Normal	
☞C1013	Control module mismatch	
☞ C1015	G sensor circuit (for 4WD model)	
☞C1016	Brake light switch	
☞C1021	RF	Wheel speed sensor circuit
☞C1025	LF	
☞C1031	RR	
☞C1035	LR	
☞C1022	RF	Wheel speed sensor or encoder
☞C1026	LF	
☞C1032	RR	
☞C1036	LR	
☞C1033	Wheel speed sensor deviation	
☞C1041	RF	Inlet solenoid
☞C1045	LF	
☞C1051	RR	
☞C1055	LR	
☞C1042	RF	Outlet solenoid
☞C1046	LF	
☞C1052	RR	
☞C1056	LR	
☞ C1057	Power supply voltage too high / too low	
☞ C1061	Pump motor circuit	
☞ C1063	Solenoid valve power supply driver circuit	
☞ C1071	Control module internal defect	

DTC Clearance

S7RW0A4504006

⚠ WARNING

When performing a driving test, select a safe place where there is neither any traffic nor any traffic accident possibility and be very careful during testing to avoid occurrence of an accident.

After repair or replace malfunction part(s), clear all DTCs by performing the following procedure or using SUZUKI scan tool.

1) Connect SUZUKI scan tool to data link connector in the same manner as when making this connection for DTC check.
2) Turn ignition switch to ON position.
3) Erase DTC according to instructions displayed on scan tool. Refer to scan tool operator's manual for further derails.

NOTE

For DTC C1022, C1026, C1032, C1036 and C1061, confirm that ABS warning light turns off after performing Step 2 of "Test Driving" under "ABS Check", and then clear the DTCs.

4) After completing the clearance, turn ignition switch OFF and disconnect scan tool from data link connector.
5) Perform "Driving Test" (Step 2 of "ABS Check") and "DTC Check" and confirm that NO DTC is displayed on scan tool.

Scan Tool Data

S7RW0A4504007

The parameter data below are values measured with the scan tool when the normally operating vehicle is under the following conditions. When taking measurements for comparison by using the scan tool, be sure to check that the vehicle is under the following conditions.

- Apply parking brake and block wheels.
- Ignition switch ON.
- Turn OFF air conditioner (if equipped).
- Apply no load to power steering (if equipped). (Don't turn it)
- Turn OFF all electric loads (except ignition).
- No DTC.
- ABS is not operated. (Normal braking operation)

Scan Tool Data		Standards	Condition
☞ Battery Voltage		10.0 – 16.0 V	—
☞ Pump Motor Driver		0.0 V	—
☞ RF Wheel Speed		0 km/h, 0.0 MPH	Vehicle stop
☞ LF Wheel Speed		0 km/h, 0.0 MPH	Vehicle stop
☞ RR Wheel Speed		0 km/h, 0.0 MPH	Vehicle stop
☞ LR Wheel Speed		0 km/h, 0.0 MPH	Vehicle stop
☞ Brake Switch		ON	Brake pedal depressed
		OFF	Brake pedal released
☞ G sensor		0.00G (4WD model)	Place vehicle on the level
		2.54G (2WD model)	Place vehicle on the level
☞ Solenoid Valve Power Supply Driver		ON	Ignition switch ON
☞ Inlet Solenoid	RF	OFF	Vehicle stop
	LF		
	RR		
	LR		
☞ Outlet Solenoid	RF	OFF	Vehicle stop
	LF		
	RR		
	LR		

Scan Tool Data Definition

Battery Volt (V)

Battery Voltage is an analog input signal read by the ABS control module. Certain ABS control module functions will be modified if the battery voltage falls below or rises above programmed thresholds.

Pump Motor Driver (V)

This parameter indicates the operational condition of the pump motor driver (transistor).

RF Wheel Speed, LF Wheel Speed, RR Wheel Speed and LF Wheel Speed (km/h, MPH)

Wheel speed is an ABS control module internal parameter. It is computed by reference pulses from the wheel speed sensor.

Brake Switch (ON, OFF)

This switch signal informs the ABS control module whether the brake is active or not.

G Sensor (G)

4WD model: Vehicle acceleration is measured by G sensor and output to ABS control module as the linear voltage.
2WD model: Fixed 2.54 G.

Solenoid Valve Power Supply Driver (ON, OFF)

ABS control module monitor the supply voltage to solenoid valve power supply driver. If the voltage is supplied, ON is displayed. Beside, OFF is displayed.

Inlet Solenoid RF, Inlet Solenoid LF, Inlet Solenoid RR, Inlet Solenoid LR (ON, OFF)

This parameter indicates the operational condition of the inlet solenoid valve.

Outlet Solenoid RF, Inlet Solenoid LF, Inlet Solenoid RR, Inlet Solenoid LR (ON, OFF)

This parameter indicates the operational condition of the outlet solenoid valve.

ABS Warning Light Does Not Come ON at Ignition Switch ON

S7RW0A4504008

Wiring Diagram

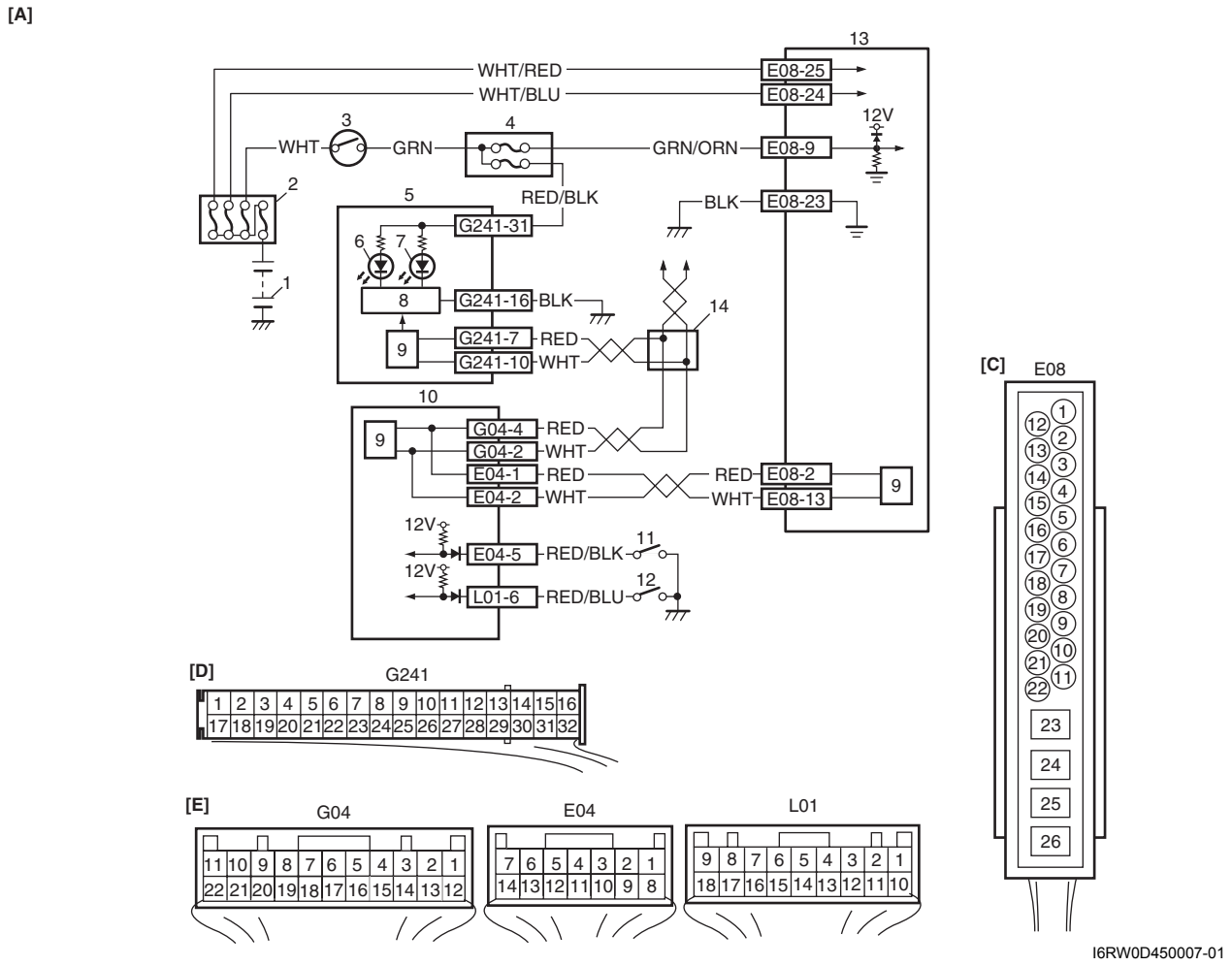

I6RW0D450007-01

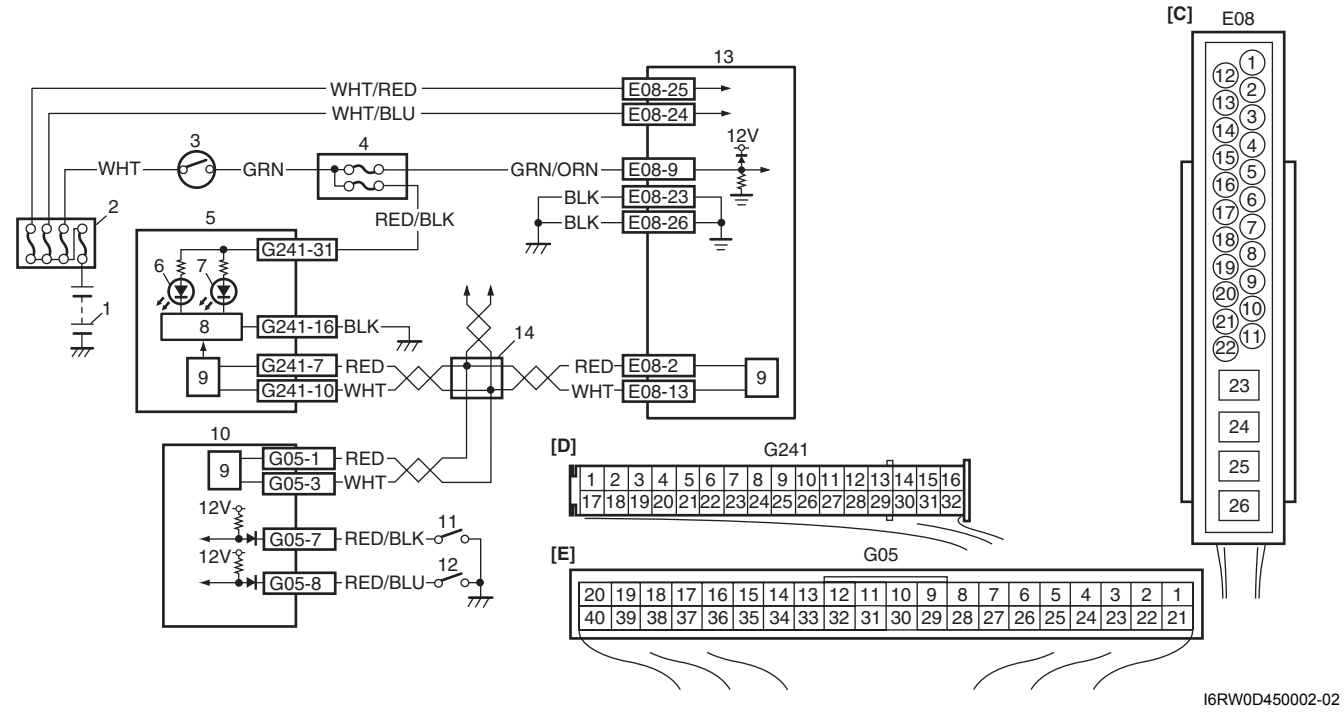

I6RW0D450002-02

[A]: Junction block with BCM	6. ABS warning light
[B]: Junction block without BCM	7. EBD warning light (brake warning light)
[C]: ABS control module connector (viewed from terminal side)	8. Light driver module
[D]: Combination meter connector (viewed from terminal side)	9. CAN driver
[E]: BCM (viewed from harness side)	10. BCM
1. Battery	11. Brake fluid level switch
2. Main fuse box	12. Parking brake switch
3. Ignition switch	13. ABS hydraulic unit / control module assembly
4. Junction block assembly	14. CAN junction connector
5. Combination meter	

Circuit Description

ABS control module transmits indication ON signal of ABS warning light to combination meter in order to turn ABS warning light ON. And then, combination meter turns ABS warning light ON.

If the ABS is in good condition, ABS control module transmits indication ON signal to combination meter in order to turn ABS warning light ON at the ignition switch ON, keeps it ON for 2 seconds and then turns it OFF. If an abnormality in the system is detected, ABS warning light is turned ON continuously by ABS control module. Also, it is turned ON continuously by light driver module when ABS control module connector is disconnected.

Troubleshooting

Step	Action	Yes	No
1	**Warning light check** 1) Turn ignition switch to ON position. *Do other warning lights come ON?*	Substitute a known-good combination meter and recheck. If warning light remains OFF, substitute a known-good ABS hydraulic unit / control module assembly and recheck.	Go to Step 2.
2	**Fuse check** *Is circuit fuse for combination meter in good condition?*	Go to Step 3.	Replace fuse and check for short circuit to ground.

Step	Action	Yes	No
3	**Combination meter power source circuit check** 1) Remove combination meter with ignition switch turned OFF. 2) Check for proper connection to “RED/BLK” and “BLK” wire of combination meter connector. 3) If OK then turn ON ignition switch and measure voltage at “RED/BLK” wire of combination meter connector and vehicle body ground. *Is it 10 - 14 V?*	Go to Step 4.	Repair power source circuit for combination meter.
4	**Combination meter ground circuit check** 1) Measure resistance between “BLK” wire of combination meter connector and vehicle body ground. *Is resistance less than 2 Ω?*	Substitute a known-good combination meter and recheck.	“BLK” circuit open or high resistance.

ABS Warning Light Comes ON Steady

S7RW0A4504009

Wiring Diagram

Refer to “Warning Diagram” under “ABS Warning Light Does Not Come ON at Ignition Switch ON”.

Circuit Description

Refer to “Circuit Description” under “ABS Warning Light Does Not Come ON at Ignition Switch ON”.

Troubleshooting

Step	Action	Yes	No
1	**DTC check** 1) Perform diagnostic trouble code check. *Is there any DTC(s)?*	Go to Step 7 of “ABS Check”.	Go to Step 2.
2	**ABS hydraulic unit / control module assembly power and ground circuit check** 1) Check that ABS hydraulic unit / control module assembly power supply circuit and ground circuit is in good condition referring to “ABS Hydraulic Unit / Control Module Assembly Power and Ground Circuit Check”. *Are check results OK?*	Go to Step 3.	Repair ABS hydraulic unit / control module assembly power or ground circuit.
3	**CAN communication line circuit check** 1) Turn ignition switch to OFF position. 2) Disconnect connectors of all control modules communicating by means of CAN. 3) Check for proper connection to CAN communication line wire. 4) If OK then check CAN communication line circuit between control modules for open, short and high resistance. *Is each CAN communication line circuit in good condition?*	Substitute a known-good combination meter and recheck. If warning light remains ON, substitute a known-good ABS hydraulic unit / control module assembly and recheck.	Repair circuit and recheck.

EBD Warning Light (Brake Warning Light) Comes ON Steady

S7RW0A4504010

Wiring Diagram

Referring to “Wiring Diagram” under “ABS Warning Light Does Not Come ON at Ignition Switch ON”.

Circuit Description

EBD warning light (brake warning light) is controlled by ABS control module and BCM through light driver module in combination meter.
If EBD system is in good condition, ABS control module turns EBD warning light ON at the ignition switch ON, keeps it ON for 2 seconds and then turns it OFF.
EBD warning light is turned ON continuously at the following conditions.

- EBD system is an abnormality
- Connector of ABS control module is disconnected
- Parking brake switch is ON
- Brake fluid level is lower than minimum level

The information of parking brake switch and brake fluid level are transmitted from BCM to light driver module in combination meter through CAN communication line.

Troubleshooting

Step	Action	Yes	No
1	**Parking brake and brake fluid level check** 1) Make sure that: • Parking brake is completely released. • Brake fluid level is upper than the minimum level. *Are the check results OK?*	Go to Step 2.	Release parking brake completely and/or replenish brake fluid.
2	**ABS warning light operation check** 1) Turn ignition switch to ON position. *Does ABS warning light come on steady?*	Perform “ABS Warning Light Comes ON Steady” previously outlined.	Go to Step 3.
3	**Parking brake switch circuit and brake fluid level switch circuit check** 1) Release parking brake completely, and replenish brake fluid. 2) Disconnect BCM connectors with ignition switch turned OFF. 3) Measure resistance between each parking brake switch circuit, brake fluid level switch circuit and vehicle body ground. *Are resistance $\infty\Omega$?*	Go to Step 4.	Check each applicable circuit for short to vehicle body ground. If OK then check parking brake switch and/or brake fluid level switch.
4	**DTC check of BCM** 1) Connect scan tool to data link connector with ignition switch turned OFF. 2) Turn ignition switch to ON position and check DTC of BCM. *Is there DTC U0073?*	Go to “DTC U0073 (No. 0073): Control Module Communication Bus Off in Section 10B”.	Go to Step 5.

Step	Action	Yes	No
5	**CAN communication line circuit check** 1) Turn ignition switch to OFF position. 2) Disconnect connectors of all control modules communicating by means of CAN. 3) Check for proper connection to CAN communication line wire. 4) If OK then check CAN communication line circuit between control modules for open, short and high resistance. *Is each CAN communication line circuit in good condition?*	Substitute a known-good combination meter and recheck. If EBD warning light remains OFF, substitute a known-good BCM and/ or ABS hydraulic unit / control module assembly and recheck.	Repair CAN communication line circuit.

Serial Data Link Circuit Check

S7RW0A4504011

Wiring Diagram

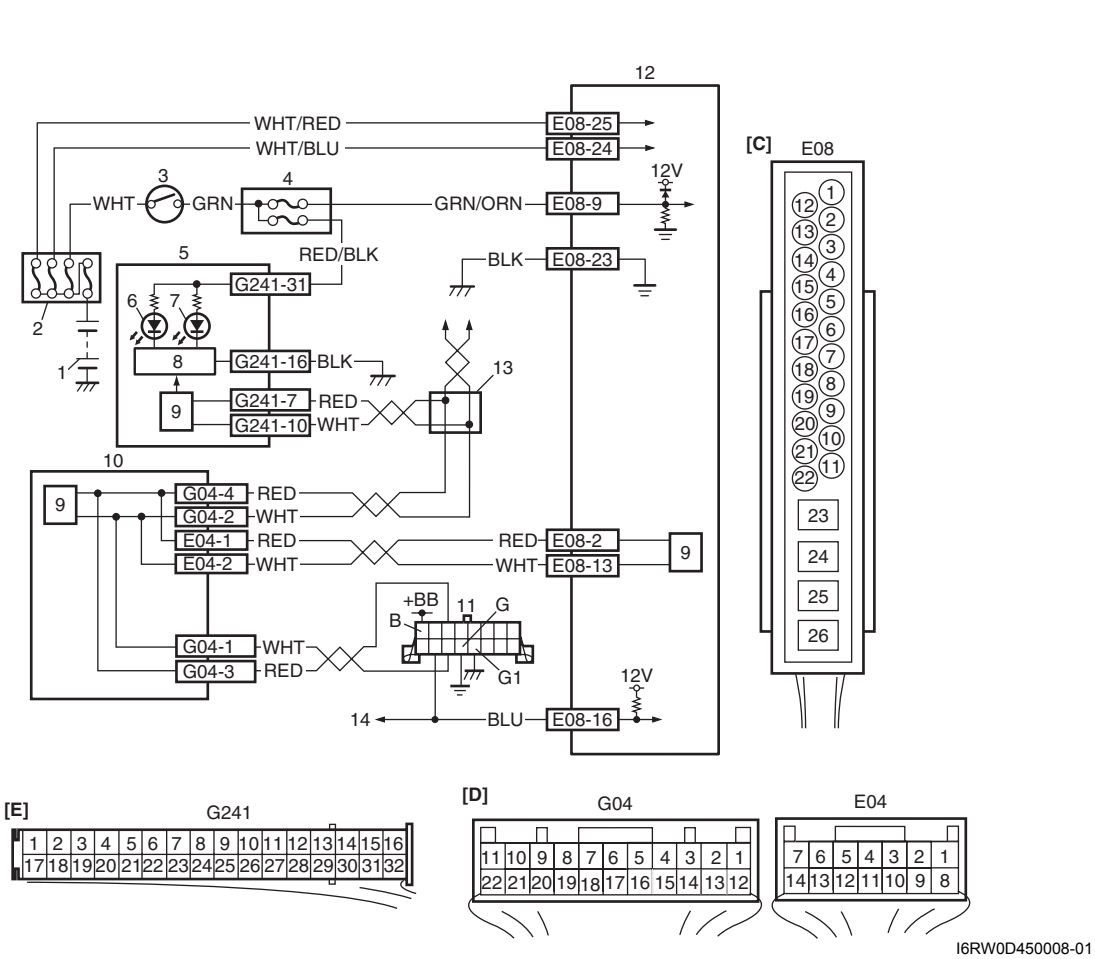

I6RW0D450008-01

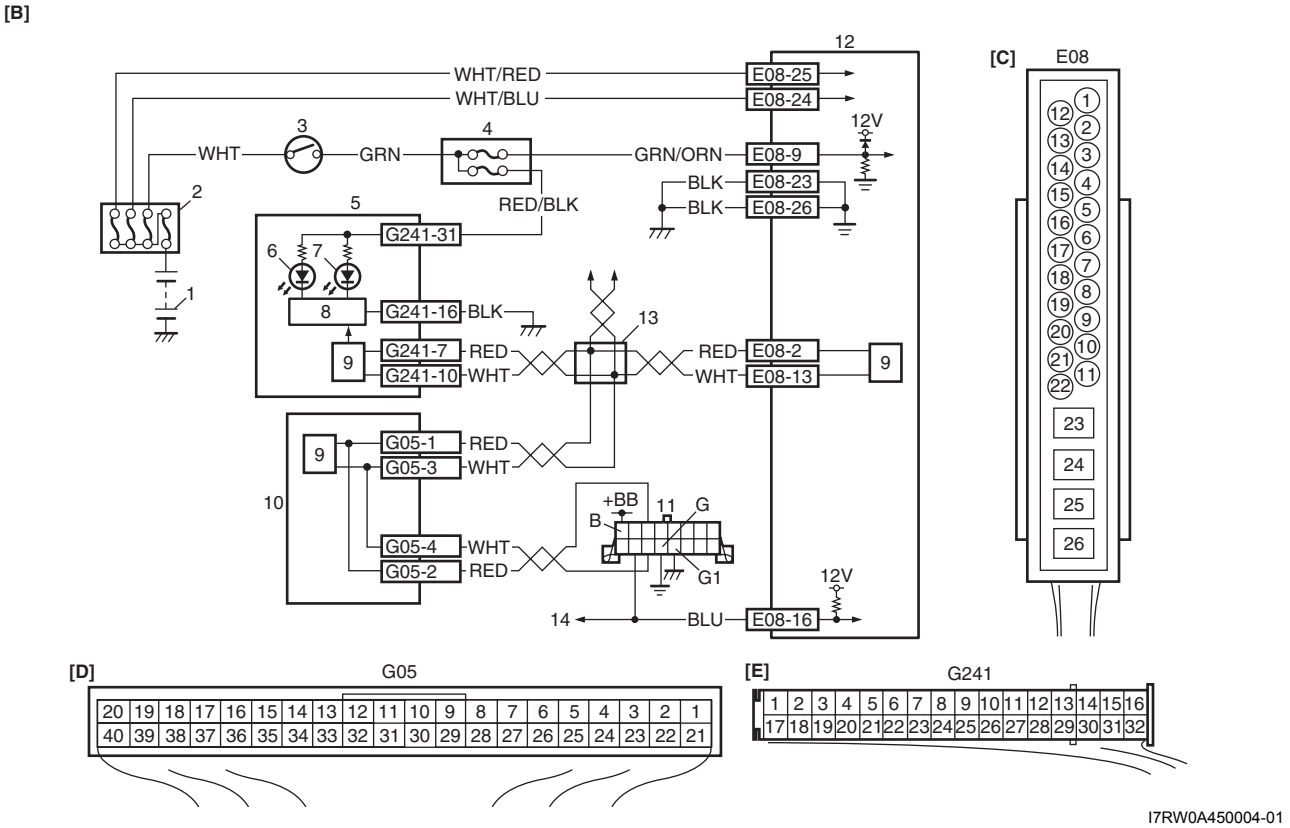

I7RW0A450004-01

[A]: Junction block with BCM	3. Ignition switch	10. BCM
[B]: Junction block without BCM	4. Junction block assembly	11. Data link connector (DLC)
[C]: ABS control module connector (viewed from terminal side)	5. Combination meter	12. ABS hydraulic unit / control module assembly
[D]: BCM connector (viewed from harness side)	6. ABS warning light	13. CAN junction connector
[E]: Combination meter connector (viewed from terminal side)	7. EBD warning light (brake warning light)	14. To TCM (A/T model), BCM, 4WD control module, P/S control module (electric P/S model), HVAC control module (auto A/C model) and SDM
1. Battery	8. Light driver module	
2. Main fuse box	9. CAN driver	

Trouble shooting

Step	Action	Yes	No
1	**Scan tool communication check** *Can scan tool communicate with BCM?*	Go to Step 2.	Go to Step 3.
2	**ABS hydraulic unit / control module assembly power and ground circuit check** 1) Check that ABS hydraulic unit / control module assembly power supply circuit and ground circuit is in good condition referring to “ABS Hydraulic Unit / Control Module Assembly Power and Ground Circuit Check”. *Are check results OK?*	Go to Step 3.	Repair ABS hydraulic unit / control module assembly power or ground circuit.
3	**Data link connector power source circuit check** 1) Disconnect scan tool from data link connector. 2) Check for proper connection to scan tool. 3) If OK then turn ignition switch to ON position, and measure voltage between terminal B of data link connector and vehicle body ground. *Is voltage 10 – 12 V?*	Go to Step 4.	Terminal B circuit open or shorted to ground.
4	**Data link connector ground circuit check** 1) Turn ignition switch to OFF position, and measure resistance between the following terminals: • Terminal G of data link connector and vehicle body ground. • Terminal G1 of data link connector and vehicle body ground. *Are resistance less than 2Ω?*	Go to Step 5.	Terminal G and/or G1 wire circuit open or high resistance.
5	**Serial communication circuit check** 1) Turn ignition switch to OFF position. 2) Disconnect connectors of all control modules communicating by serial data circuit. 3) Check proper connection at serial data circuit terminals. 4) If OK, then check for high resistance, open or short to power circuit or ground in serial data circuit. *Is check result in good condition?*	Go to Step 6.	Repair serial data circuit and recheck.
6	**CAN communication line circuit check** 1) Disconnect connectors of all control modules communicating by means of CAN. 2) Check for proper connection to CAN communication line wire. 3) If OK then check CAN communication line circuit between control modules for open, short and high resistance. *Is each CAN communication line circuit in good condition?*	Substitute a known-good ABS hydraulic unit / control module assembly and recheck.	Repair CAN communication line circuit and recheck.

DTC C1013: Control Module Mismatch

S7RW0A4504012

Wiring Diagram

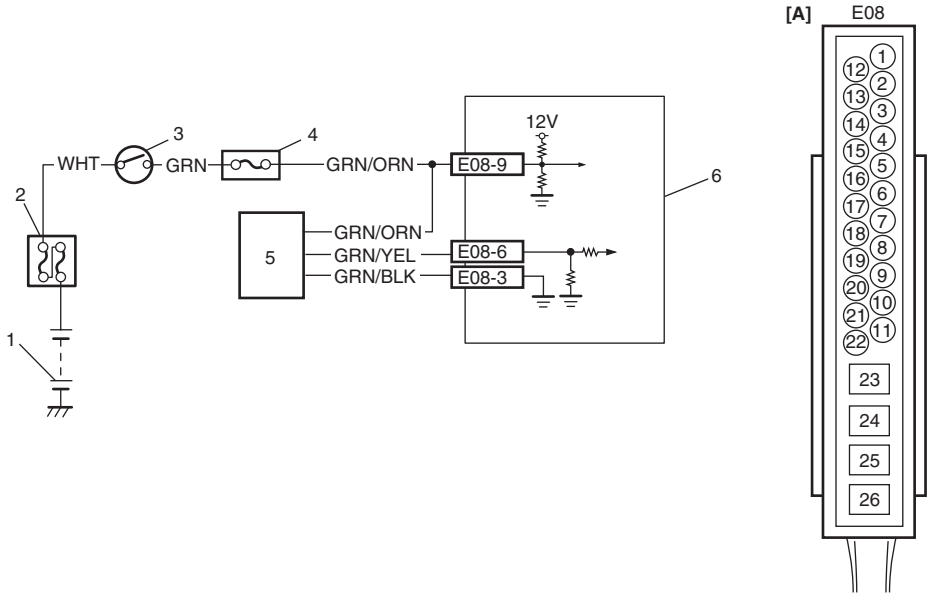

I7RW01450005-04

[A]: ABS control module connector (viewed from terminal side)	3. Ignition switch	6. ABS hydraulic unit / control module assembly
1. Battery	4. Junction block assembly	
2. Main fuse box	5. G sensor (4WD model)	

DTC Detecting Condition and Trouble Area

DTC Detecting Condition	Trouble Area
Abnormal signal is inputted to a no-used terminal of control module while running or wrong ABS control module is installed.	• ABS control module

NOTE

When ABS hydraulic unit / control module assembly for 4WD model is installed to 2WD model, this DTC is set. Replace to the correct ABS hydraulic unit / control module assembly.

Troubleshooting

Step	Action	Yes	No
1	1) Disconnect ABS hydraulic unit / control module connector with ignition switch turned OFF. 2) Turn ignition switch to ON position. 3) Measure voltage between terminal of “E08-6” and vehicle body ground. *Is it 0.3 V or more?*	“GRN/YEL” wire short to power source circuit.	Substitute a known-good ABS hydraulic unit / control module assembly and recheck.

DTC C1015: G Sensor Circuit (4WD Model)

S7RW0A4504013

Wiring Diagram

Refer to “Wiring Diagram” under “DTC C1013: Control Module Mismatch”.

DTC Detecting Condition and Trouble Area

DTC Detecting Condition	Trouble Area
• G sensor signal voltage is out of specified range. • Vehicle behavior and G sensor signal is disagreed.	• G sensor • G sensor circuit • ABS control module

NOTE

When a vehicle is lifted up and its wheel(s) is turned, this DTC is set.
In such case, clear the DTC and check again.

Troubleshooting

Step	Action	Yes	No
1	*Was “ABS Check” performed?*	Go to Step 2.	Go to “ABS Check”.
2	*Is G sensor installed its bracket securely?*	Go to Step 3.	Tighten G sensor bolt and recheck.
3	**G sensor check** 1) Disconnect G sensor connector and ABS hydraulic unit / control module connector with ignition switch turned OFF. 2) Check for proper connection to G sensor connector and ABS hydraulic unit / control module terminals of “E08-3” and “E08-6”. 3) If OK then check G sensor referring to “G Sensor Inspection (4WD Model)”. *Is it in good condition?*	Go to Step 4.	Replace G sensor.
4	**G sensor power source voltage check** 1) Turn ignition switch to ON position and measure voltage between “GRN/ORN terminal of G sensor connector and vehicle body ground. *Is it 10 – 14 V?*	Go to Step 5.	“GRN/ORN” circuit open.
5	**G sensor signal circuit and ground circuit check** 1) Measure resistance between following terminals. • Between “E08-3” terminal and “GRN/BLK” terminal of G sensor. • Between “E08-6” terminal and “GRN/YEL” terminal of G sensor. *Is each resistance less than 2Ω?*	Go to Step 6.	“GRN/BLK” and/or “GRN/YEL” wire circuits in open or high resistance.
6	**G sensor ground circuit check** 1) Connect ABS hydraulic unit / control module connector with ignition switch turned OFF. 2) Turn ignition switch to ON position and measure voltage between “GRN/BLK” terminal of G sensor connector and vehicle body ground. *Is it 0 V?*	Substitute a known-good ABS hydraulic unit / control module assembly and recheck.	“GRN/BLK” circuit to power circuit.

DTC 1016: Brake Light Switch

S7RW0A4504014

Wiring Diagram

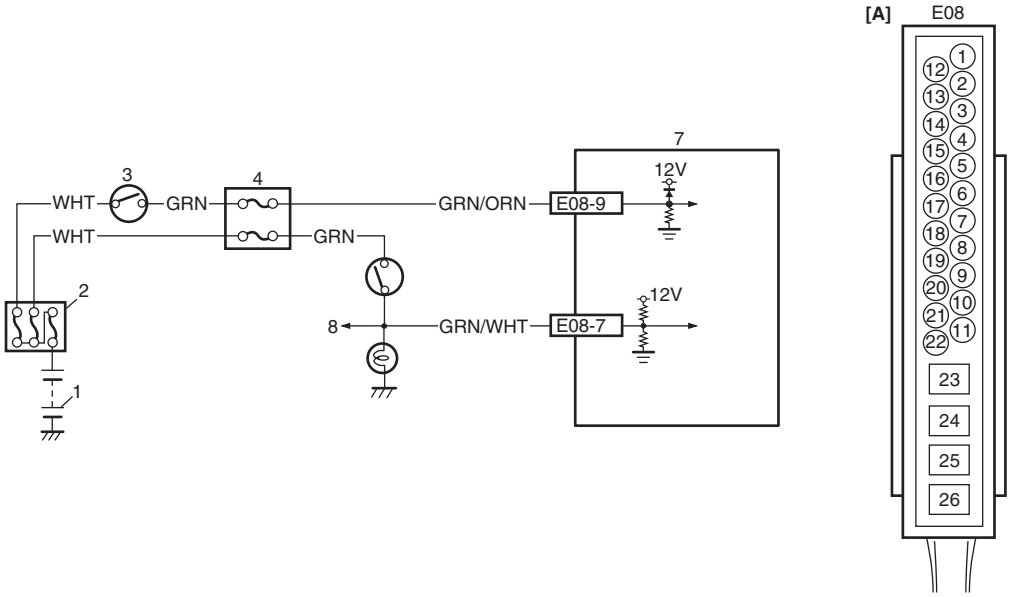

I7RW01450006-05

[A]: ABS control module connector (viewed from terminal side)	3. Ignition switch	6. Brake light
1. Battery	4. Junction block assembly	7. ABS hydraulic unit / control module assembly
2. Main fuse box	5. Brake light switch	8. To ECM and shift lock relay (A/T model)

DTC Detecting Condition and Trouble Area

DTC Detecting Condition	Trouble Area
Brake light switch signal voltage becomes 4.8 – 8.0 V for specified time.	• Brake light circuit • Brake light switch • ABS control module

NOTE

When a vehicle is lifted up and its wheel(s) is turned, this DTC is set.
In such case, clear the DTC and check again.

Troubleshooting

Step	Action	Yes	No
1	*Was "ABS Check" performed?*	Go to Step 2.	Go to "ABS Check".
2	**Brake light operation check** 1) Turn ignition switch to ON position and depress brake pedal. *Does brake light turn ON?*	Go to Step 3.	Repair brake light switch, brake light and/ or brake light circuit and recheck.
3	**Brake light switch signal circuit check** 1) Disconnect ABS hydraulic unit / control module and brake light switch connector with ignition switch turned OFF. 2) Check for proper connection to "E08-7" terminal of ABS hydraulic unit / control module and "GRN/WHT" wire terminal of brake light switch. 3) If OK then measurer resistance between terminal of "E08-7" and "GRN/WHT" wire terminal of brake light switch connector. *Is it less than 2 Ω?*	Substitute a known-good ABS hydraulic unit / control module and recheck.	"GRN/WHT" wire open or high resistance.

DTC C1021 / C1022 / C1025 / C1026 / C1031 / C1032 / C1035 / C1036: Wheel Speed Sensor Circuit / Sensor or Encoder

S7RW0A4504015

DTC C1021 / C1025 / C1031 / C1035: Right-Front / Left-Front / Right-Rear / Left-Rear Wheel Speed Sensor Circuit
DTC C1022 / C1026 / C1032 / C1036: Right-Front / Left-Front / Right-Rear / Left-Rear Wheel Speed Sensor or Encoder

Wiring Diagram

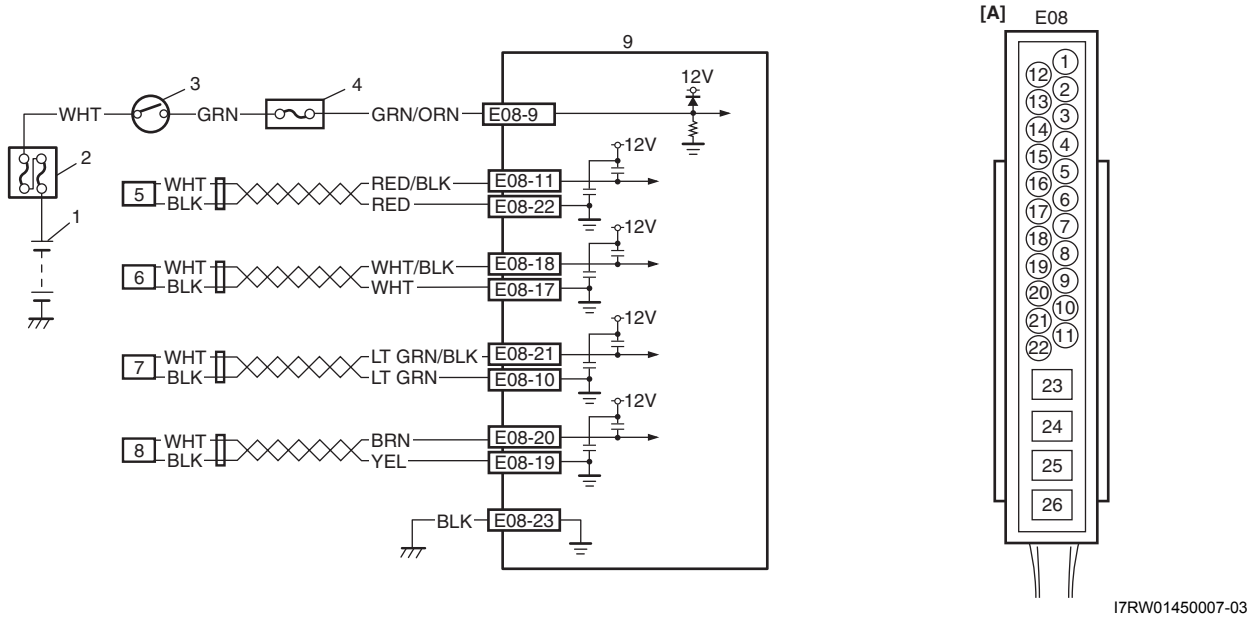

[A]: ABS control module connector (viewed from terminal side)	4. Junction block assembly	8. Right-rear wheel speed sensor
1. Battery	5. Left-front wheel speed sensor	9. ABS hydraulic unit / control module assembly
2. Main fuse box	6. Right- front wheel speed sensor	
3. Ignition switch	7. Left-rear wheel speed sensor	

DTC Detecting Condition and Trouble Area

DTC Detecting Condition	Trouble Area
C1021, C1025, C1031, C1035: Wheel speed sensor circuit is opened, shorted to power, ground and/or each other circuit. **C1022, C1026, C1032, C1036:** • Wheel speed is different from other wheel speed (vehicle speed) for more than specified time. • Abnormal wheel speed sensor signal is detected for more than specified time.	• Wheel speed sensor • Wheel speed sensor circuit • Wheel encoder • ABS control module

NOTE

When the vehicle was operated in any of the following ways, one of these DTCs may be set even when the sensor is in good condition. If such possibility is suspected, clear DTC once referring to “DTC Clearance” and after performing the driving test as described in Step 2 of “ABS Check”, check whether or not any abnormality exists.

- **The vehicle was driven with parking brake pulled.**
- **Wheel spin occurred while driving.**
- **Wheel(s) was turned while the vehicle was jacked up.**
- **The vehicle was stuck.**

DTC Troubleshooting

Step	Action	Yes	No
1	*Was "ABS Check" performed?*	Go to Step 2.	Go to "ABS Check".
2	**Check tire condition** 1) Check that tire pressure is specifications. *Are they in good condition?*	Go to Step 3.	Replace tire or adjust tire pressure and recheck.
3	**Wheel speed sensor circuit check** 1) Disconnect ABS hydraulic unit / control module connector and applicable wheel speed sensor connector with ignition switch turned OFF. 2) Check for proper connection to ABS hydraulic unit / control module connector at applicable terminals and terminals of applicable wheel speed sensor. 3) If OK then check applicable wheel speed sensor circuit for open, short and high resistance. *Is each applicable wheel speed sensor circuit in good condition?*	Go to Step 4.	Repair circuit and recheck
4	**Wheel speed sensor check** 1) Inspection applicable wheel speed sensor referring to "Front and Rear Wheel Speed Sensor Inspection". *Is it in good condition?*	Go to Step 5.	Clean or replace.
5	**Wheel speed sensor encoder check** 1) Inspection applicable wheel speed sensor encoder referring to "Front Wheel Speed Sensor Encoder On-Vehicle Inspection" and/or "Rear Wheel Speed Sensor Encoder On-Vehicle Inspection". *Is it in good condition?*	Go to Step 6.	Clean or replace wheel hub assembly.
6	**Wheel speed sensor signal check** 1) Inspection applicable wheel speed sensor referring to "Front and Rear Wheel Speed Sensor On-Vehicle Inspection". *Is it in good condition?*	Substitute a known-good wheel hub assembly and recheck. If DTC detected, substitute a known-good ABS hydraulic unit / control module and recheck.	Replace wheel speed sensor and recheck.

DTC C1033: Wheel Speed Sensor Deviation

S7RW0A4504016

Wiring Diagram

Refer to “Wiring Diagram” under “DTC C1021 / C1022 / C1025 / C1026 / C1031 / C1032 / C1035 / C1036: Wheel Speed Sensor Circuit / Sensor or Encoder”.

DTC Detecting Condition and Trouble Area

DTC Detecting Condition	Trouble Area
• Three or more sensor signals seem to be effected by temporary failure suspicion at the same time. • One wheel or more are controlled by ABS for more than specified time.	• Wheel speed sensor • Wheel speed sensor circuit • Wheel encoder • ABS control module • Tire (flat tire)

DTC Troubleshooting

Step	Action	Yes	No
1	*Was “ABS Check” performed?*	Go to Step 2.	Go to “ABS Check”.
2	**Check DTC for ABS** 1) Connect scan tool to DLC with ignition switch turned OFF. 2) Turn ignition switch ON and check DTC for ABS. *Is DTC C1021, C1022, C1025, C1026, C1031, C1032, C1035 and/or C1036 detected together?*	Go to “DTC C1021 / C1022 / C1025 / C1026 / C1031 / C1032 / C1035 / C1036: Wheel Speed Sensor Circuit / Sensor or Encoder” and recheck.	Go to Step 3.
3	**Check tire condition** 1) Check that tire pressure is specifications. *Are they in good condition?*	Go to Step 4.	Replace tire or adjust tire pressure and recheck.
4	**Wheel speed sensor circuit check** 1) Disconnect ABS hydraulic unit / control module connector and all wheel speed sensor connectors with ignition switch turned OFF. 2) Check for proper connection to ABS hydraulic unit / control module connector and terminals of wheel speed sensor. 3) If OK then check all wheel speed sensors circuit for open, short and high resistance. *Are wheel speed sensor circuits in good condition?*	Go to Step 5.	Repair circuit and recheck.
5	**Wheel speed sensor check** 1) Inspection all wheel speed sensors referring to “Front and Rear Wheel Speed Sensor Inspection”. *Are they in good condition?*	Go to Step 6.	Clean or replace.
6	**Wheel speed sensor encoder check** 1) Inspection all wheel speed sensor encoders referring to “Front Wheel Speed Sensor Encoder On-Vehicle Inspection” and “Rear Wheel Speed Sensor Encoder On-Vehicle Inspection”. *Are they in good condition?*	Go to Step 7.	Clean or replace wheel hub assembly.
7	**Wheel speed sensor signal check** 1) Inspection all wheel speed sensors referring to “Front and Rear Wheel Speed Sensor On-Vehicle Inspection”. *Are they in good condition?*	Substitute a known-good wheel hub assembly and recheck. If DTC detected, substitute a known-good ABS hydraulic unit / control module and recheck.	Replace wheel speed sensor and recheck.

DTC C1041 / C1042 / C1045 / C1046 / C1051 / C1052 / C1055 / C1056: Inlet / Outlet Solenoid

S7RW0A4504017

DTC C1041 / C1045 / C1051 / C1055: Right-Front / Left-Front / Right-Rear / Left- Rear Inlet Solenoid
DTC C1042 / C1046 / C1052 / C1056: Right-Front / Left-Front / Right-Rear / Left- Rear Outlet Solenoid

Wiring Diagram

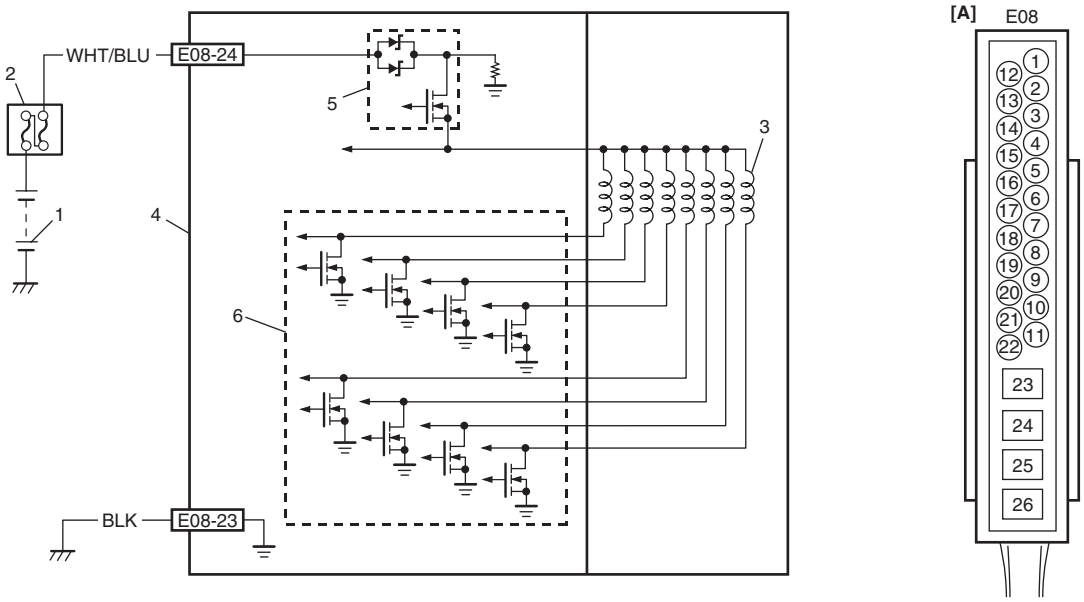

I7RW01450008-02

[A]: ABS control module assembly connector (viewed from terminal side)	4. ABS hydraulic unit / control module assembly
1. Battery	5. Solenoid valve power supply driver (transistor)
2. Main fuse box	6. Solenoid valve driver
3. Solenoid valve	

DTC Detecting Condition and Trouble Area

DTC Detecting Condition	Trouble Area
• Solenoid valve circuit is opened, shorted to power, ground and/or each valve in ABS hydraulic unit / control module assembly. • Mismatching solenoid output and solenoid monitor is detected.	• ABS control module

DTC Troubleshooting

Step	Action	Yes	No
1	*Was “ABS Check” performed?*	Go to Step 2.	Go to “ABS Check”.
2	**ABS hydraulic unit / control module power source circuit check** 1) Turn ignition switch to OFF position. 2) Disconnect ABS hydraulic unit / control module connector. 3) Check for proper connection to ABS hydraulic unit / control module connector at terminal “E08-24” and “E08-23”. 4) If OK, then measure voltage between terminal “E08-24” of module connector and “E08-23”. *Is it 10 – 14 V?*	Substitute a known-good ABS hydraulic unit / control module assembly and recheck.	“WHT/BLU” or “BLK” circuit open or high resistance.

DTC C1057: Power Supply Voltage Too High / Too Low

S7RW0A4504018

Wiring Diagram

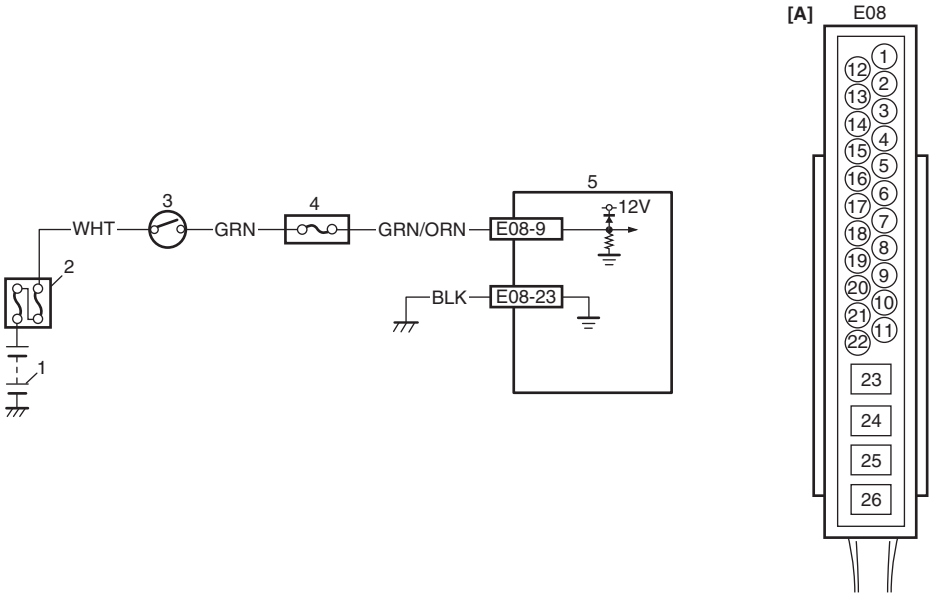

I7RW01450009-03

[A]: ABS control module connector (viewed from terminal side)	2. Main fuse box	4. Junction block assembly
1. Battery	3. Ignition switch	5. ABS hydraulic unit control module assembly

DTC Detecting Condition and Trouble Area

DTC Detecting Condition	Trouble Area
ABS control module power supply voltage is too high or too low.	• ABS control module power supply circuit • ABS control module

DTC Troubleshooting

Step	Action	Yes	No
1	*Was “ABS Check” performed?*	Go to Step 2.	Go to “ABS Check”.
2	**Check ABS hydraulic unit / control module assembly power and ground circuit** 1) Check that ABS hydraulic unit / control module assembly power supply circuit and ground circuit is in good condition referring to “ABS Hydraulic Unit / Control Module Assembly Power and Ground Circuit Check”. *Are check results OK?*	Go to Step 3	Repair ABS hydraulic unit / control module assembly power or ground circuit.
3	**ABS hydraulic unit / control module power source voltage check** 1) Measure battery voltage with engine running at 3000 rpm. *Is voltage 15 V or less?*	Substitute a known-good ABS hydraulic unit / control module assembly and recheck.	Check charging system referring to “Generator Test (Undercharged Battery Check) in Section 1J”.

DTC C1061: Pump Motor Circuit

S7RW0A4504019

Wiring Diagram

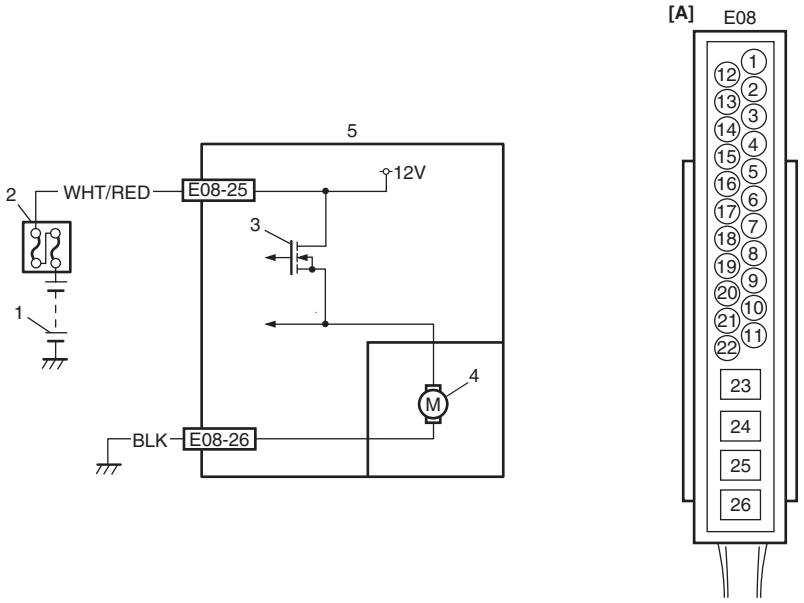

I7RW01450010-02

[A]: ABS control module connector (viewed from terminal side)	3. Pump motor driver (transistor)
1. Battery	4. ABS pump motor
2. Main fuse box	5. ABS hydraulic unit / control module assembly

DTC Detecting Condition and Trouble Area

DTC Detecting Condition	Trouble Area
• Defective pump motor and/or motor power supply voltage is too low. • Pump motor circuit in ABS control module is opened, shorted to power or ground circuit.	• Pump Motor and/or Motor Driver power supply circuit • ABS control module

DTC Troubleshooting

Step	Action	Yes	No
1	*Was “ABS Check” performed?*	Go to Step 2.	Go to “ABS Check”.
2	**Check ABS hydraulic unit / control module assembly power and ground circuit** 1) Check that ABS hydraulic unit / control module assembly power supply circuit and ground circuit is in good condition referring to “ABS Hydraulic Unit / Control Module Assembly Power and Ground Circuit Check”. *Are check results OK?*	Substitute a known-good ABS hydraulic unit / control module assembly and recheck.	Repair ABS hydraulic unit / control module assembly power or ground circuit.

DTC C1063: Solenoid Valve Power Supply Driver Circuit

S7RW0A4504020

Wiring Diagram

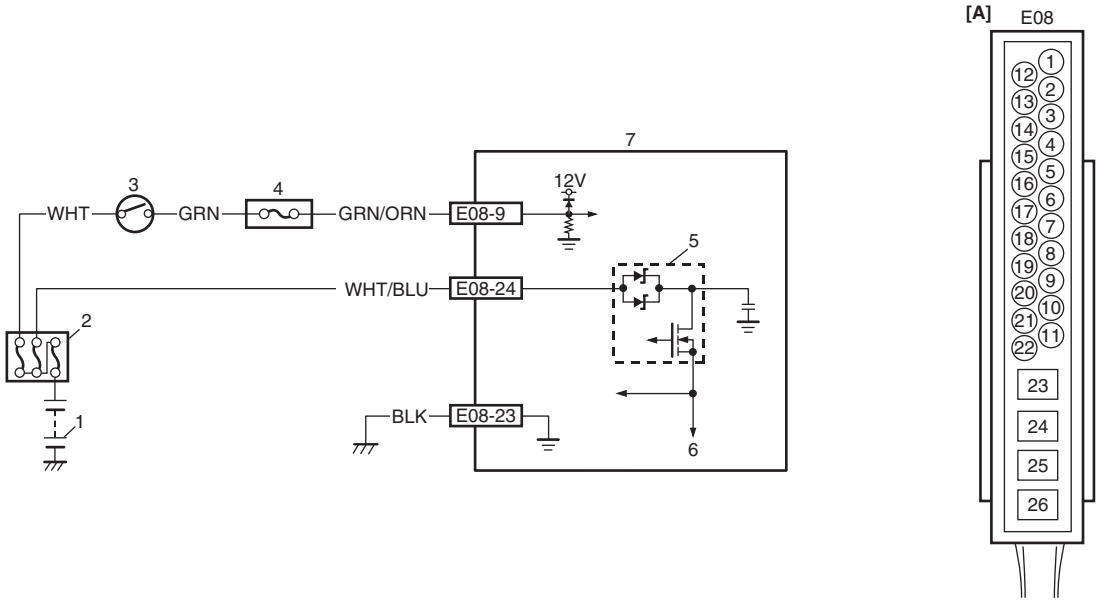

I7RW01460015-01

[A]: ABS control module connector (viewed from terminal side)	4. Junction block assembly
1. Battery	5. Solenoid valve power supply driver (transistor)
2. Main fuse box	6. To solenoid valve
3. Ignition switch	7. ABS hydraulic unit / control module assembly

DTC Detecting Condition and Trouble Area

DTC Detecting Condition	Trouble Area
• Solenoid valve power supply driver circuit is opened, shorted to power and ground circuit in ABS control module. • Solenoid valve power supply voltage is too low. • Solenoid valve power supply driver is stuck to ON or OFF position. • Output circuit from control unit is opened or shorted in ABS control module. • Mismatching solenoid output and solenoid monitor is detected.	• Solenoid valve power supply circuit • ABS control module

DTC Troubleshooting

Step	Action	Yes	No
1	*Was “ABS Check” performed?*	Go to Step 2.	Go to “ABS Check”.
2	**Check ABS hydraulic unit / control module assembly power and ground circuit** 1) Check that ABS hydraulic unit / control module assembly power supply circuit and ground circuit is in good condition referring to “ABS Hydraulic Unit / Control Module Assembly Power and Ground Circuit Check”. *Are check results OK?*	Substitute a known-good ABS hydraulic unit / control module assembly and recheck.	Repair ABS hydraulic unit / control module assembly power or ground circuit.

DTC C1071: Control Module Internal Defect

S7RW0A4504021

DTC Detecting Condition and Trouble Area

DTC Detecting Condition	Trouble Area
ABS control module internal defect is detected.	• ABS control module

DTC Troubleshooting

Step	Action	Yes	No
1	*Was “ABS Check” performed?*	Go to Step 2.	Go to “ABS Check”.
2	**Check ABS hydraulic unit / control module assembly power and ground circuit** 1) Check that ABS hydraulic unit / control module assembly power supply circuit and ground circuit is in good condition referring to “ABS Hydraulic Unit / Control Module Assembly Power and Ground Circuit Check”. *Are check results OK?*	Substitute a known-good ABS hydraulic unit / control module assembly and recheck.	Repair ABS hydraulic unit / control module assembly power or ground circuit.

ABS Hydraulic Unit / Control Module Assembly Power and Ground Circuit Check

S7RW0A4504022

Wiring Diagram

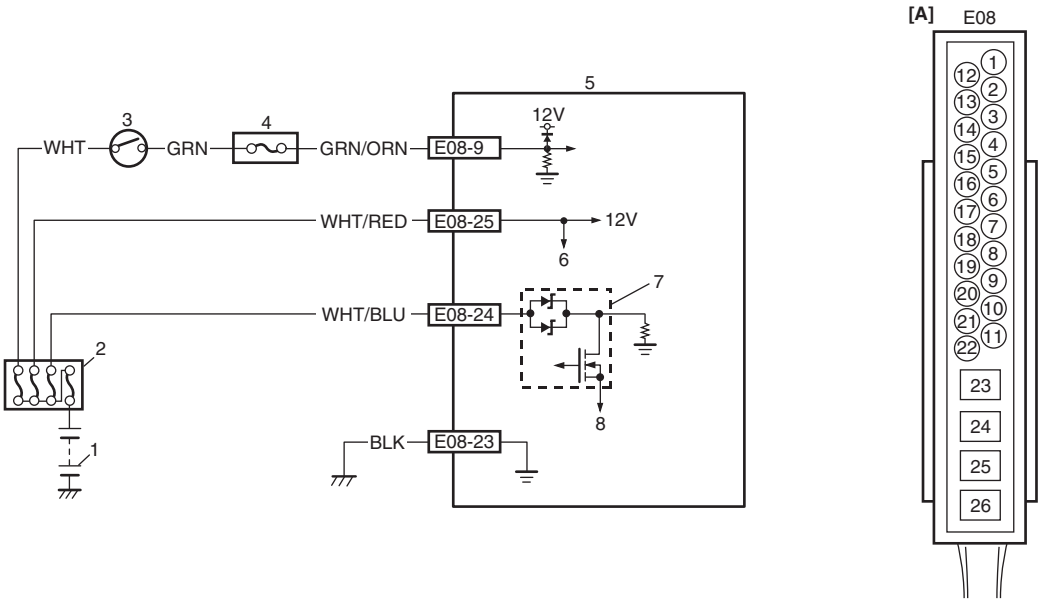

I6RW0C450004-01

[A]: ABS control module connector (viewed from terminal side)	5. ABS hydraulic unit / control module assembly
1. Battery	6. To pump motor driver
2. Main fuse box	7. Solenoid valve power supply driver
3. Ignition switch	8. To solenoid valve
4. Junction block assembly	

Circuit Description

When the ignition switch is turned ON, power supply is supplied to ABS control module. And, power supply is supplied to pump motor and solenoid valve in other line by the switching function in ABS control module.

Troubleshooting

Step	Action	Yes	No
1	**Check fuse** *Are main fuses and circuit fuses for ABS in good condition?*	Go to Step 2.	Replace fuse and check for short circuit to ground.
2	**Check ABS control module power supply circuit** 1) Turn ignition switch to OFF position. 2) Disconnect ABS control module connector. 3) Check for proper connection to ABS control module connector at terminals “E08-9”, “E08-23”, “E08-24”, and “E08-25”. 4) If OK, then turn ignition switch to ON position and measure voltage between terminal “E08-9” and vehicle body ground. *Is it 10 – 14 V?*	Go to Step 3.	“GRN/ORN” circuit open.
3	**Pump motor and solenoid valve power supply circuit** 1) Turn ignition switch to OFF position. 2) Measure voltage between each terminal of “E08-24”, “E08-25” and vehicle body ground. *Are they 10 – 14 V?*	Go to Step 4.	“WHT/BLU” and/or “WHT/RED” circuit open.
4	**Check ABS hydraulic unit / control module assembly ground circuit** 1) Measure resistance between terminal “E08-23” and vehicle body ground. *Is resistance less than 2 Ω?*	ABS hydraulic unit / control module assembly power and ground circuits are in good condition.	“BLK” circuit open or high resistance.

Repair Instructions

ABS Hydraulic Unit Operation Check

S7RW0A4506001

1) Check that basic brake system other than ABS is in good condition.
2) Check that battery voltage is 11 V or more.
3) Hoist vehicle.
4) Set transmission to neutral (P range for A/T) and release parking brake.
5) Turn each wheel gradually by hand to check if brake dragging occurs. If it does, correct.
6) Connect SUZUKI scan tool to data link connector (DLC) (1) with ignition switch OFF.

   Special tool
   (A): SUZUKI scan tool

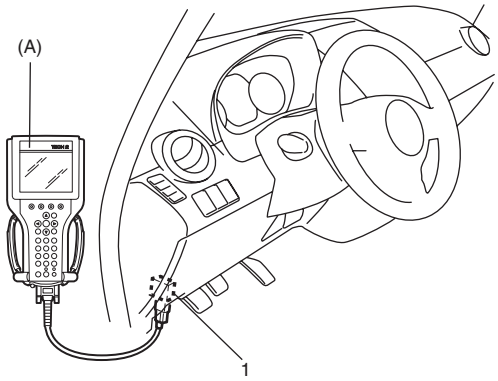

I5RW0A450007-01

7) Turn ignition switch to ON position and select menu to “HYDRAULIC CONTROL TEST” under “miscellaneous test” (“MISC. TEST”) mode of SUZUKI scan tool.
8) Perform the following checks with help of another person.
   Brake pedal (1) should be depressed and then select testing wheel by SUZUKI scan tool and the wheel (2) should be turned by another person’s hand. At this time, check that:
   - Operation sound of solenoid is heard and the wheel turns only about 0.5 sec. (Brake force is depressurized).
   - Operation sound of pump motor is heard and pulsation is felt at brake pedal.

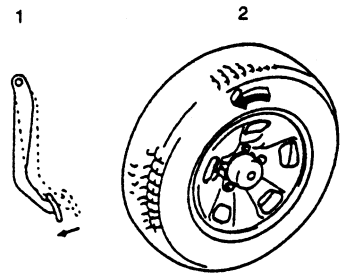

I4RH01450021-01

9) Check for all 4-wheels condition respectively. If a faulty condition is found, replace ABS hydraulic unit / control module assembly.
10) After completing the check, turn ignition switch to OFF position and disconnect SUZUKI scan tool from DLC.

ABS Hydraulic Unit / Control Module Assembly Components

S7RW0A4506002

⚠ CAUTION

Never disassemble ABS hydraulic unit / control module assembly, loosen blind plug or remove motor. Performing any of these prohibited services will affect original performance of ABS hydraulic unit / control module assembly.

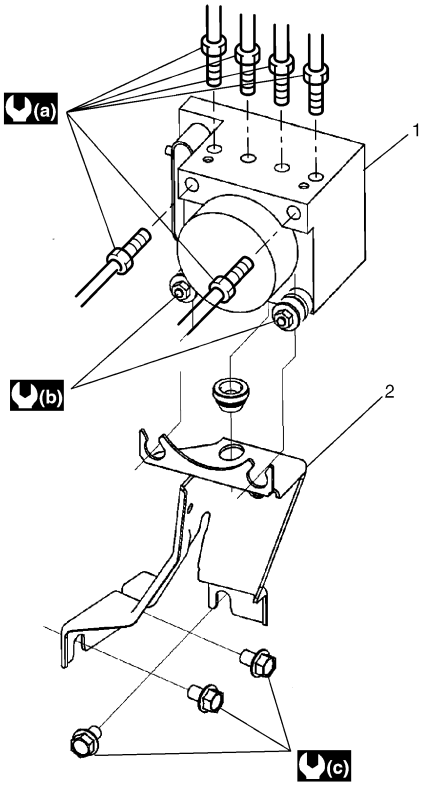

I6RW0C450006-01

1. ABS hydraulic unit / control module assembly	(a) : 16 N·m (1.6 kgf-m, 11.5 lb-ft)	(c) : 26 N·m (2.6 kgf-m, 19.0 lb-ft)
2. Bracket	(b) : 9 N·m (0.9 kgf-m, 6.5 lb-ft)	

ABS Hydraulic Unit / Control Module Assembly On-Vehicle Inspection

S7RW0A4506003

⚠ CAUTION

Never disassemble ABS hydraulic unit / control module assembly, loosen blind plug or remove motor. Performing any of these prohibited services will affect original performance of ABS hydraulic unit / control module assembly.

Check hydraulic unit for fluid leakage.
If any, repair or replace.

ABS Hydraulic Unit / Control Module Assembly Removal and Installation

S7RW0A4506004

⚠ CAUTION

Never disassemble ABS hydraulic unit / control module assembly, loosen blind plug or remove motor. Performing any of these prohibited services will affect original performance of ABS hydraulic unit / control module assembly.

Removal

1) Disconnect negative cable from battery.
2) Disconnect ABS hydraulic unit / control module assembly connector (1) by pull up the lock (2).

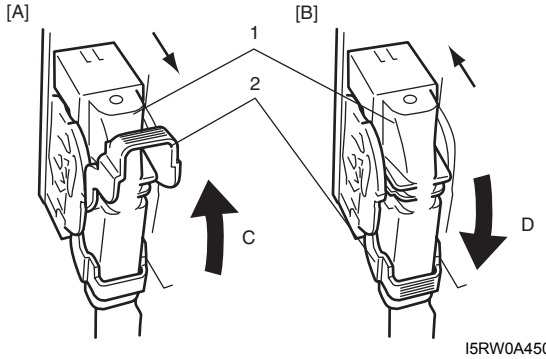

I5RW0A450001-01

[A]: Disconnect	C: Pull up to disconnect
[B]: Connect	D: Pull down to connect

3) Using special tool, loosen flare nuts (1) and disconnect brake pipes (2) from ABS hydraulic unit / control module assembly (3).

Special tool
(A): 09950-78220

NOTE

Put bleeder plug cap or the like onto pipe to prevent fluid from spilling. Do not allow brake fluid to get on painted surfaces.

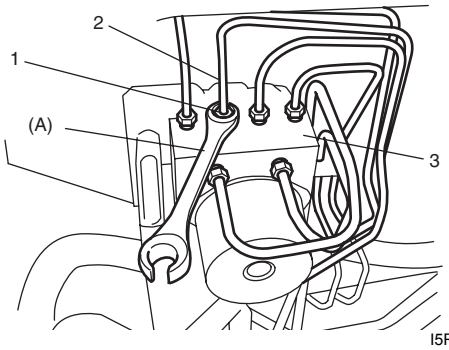

I5RW0A450020-01

4) Remove ABS hydraulic unit / control module with bracket from vehicle by removing two bracket bolts.
5) Remove bolt and pull out ABS hydraulic unit / control module assembly (1) from bracket (3) using flat end rod or the like (2).

⚠ CAUTION

- **Do not give an impact to hydraulic unit.**
- **Use care not to allow dust to enter hydraulic unit.**
- **Do not place hydraulic unit on its side or upside down. Handling it in inappropriate way will affect its original performance.**

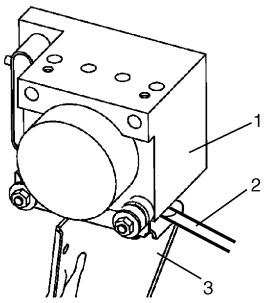

I5RW0A450021-01

Installation

1) Install hydraulic unit / control module assembly by reversing removal procedure noting the following. Install ABS hydraulic unit / control module assembly bracket bolt as follows.
   a) Tighten bracket bolt (1) and (2) by hand.
   b) Then tighten bracket bolt to specified torque. Tightening order (1) → (2)

   Tightening torque
   Brake pipe flare nut (a): 16 N·m (1.6 kgf-m, 11.5 lb-ft)
   ABS hydraulic unit / control module assembly bolt (b): 9 N·m (0.9 kgf-m, 6.5 lb-ft)
   ABS hydraulic unit / control module assembly bracket bolt (c): 26 N·m (2.6 kgf-m, 19.0 lb-ft)

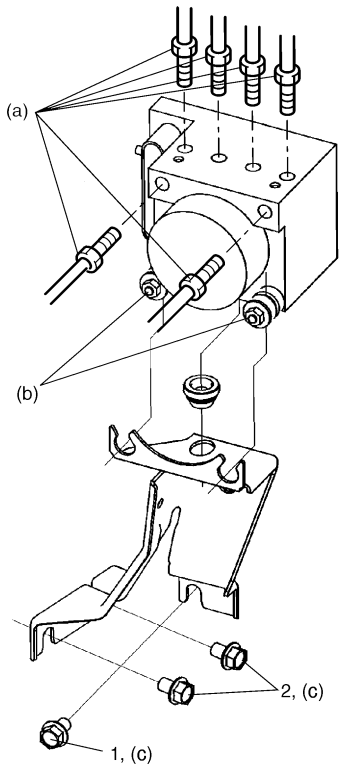

I6RW0C450011-01

2) Bleed air from brake system referring to “Air Bleeding of Brake System in Section 4A”.
3) Check each installed part for fluid leakage and perform “ABS Hydraulic Unit Operation Check”.

NOTE

For new ABS hydraulic unit / control module assembly, if “ABS Hydraulic Unit Operation Check” has not been performed, ABS warning light may flash when ignition switch is turned ON position.
Accordingly preform “ABS Hydraulic Unit Operation Check” to stop flashing of ABS warning light.

Front and Rear Wheel Speed Sensor On-Vehicle Inspection

S7RW0A4506005

Output Voltage Inspection

1) Disconnect negative (–) cable from battery.
2) Hoist vehicle a little.
3) Disconnect wheel speed sensor connector.
4) Set up measuring device as shown in figure, the resistance to 115 Ω and the power supply voltage to 12 V.

⚠ CAUTION

Incorrect voltage and/or wrong connection cause damage to wheel speed sensor.

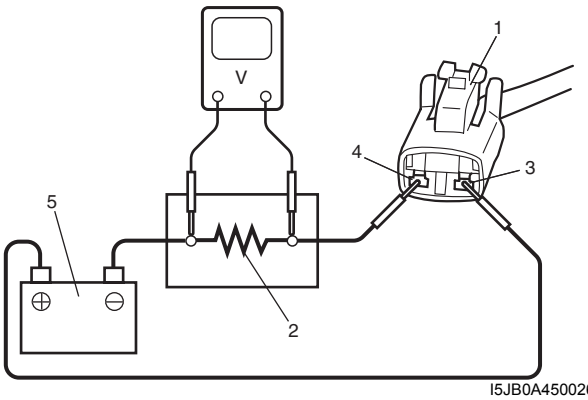

I5JB0A450026-03

1. Wheel speed sensor connector	4. “BLK” wire terminal
2. Resistance (115Ω)	5. Power supply (12 V)
3. “WHT” wire terminal	

5) Measure voltage at resistance without wheel rotation.If voltage is out of specification, check sensor, mating encoder and their installation conditions.

Voltage at the resistance (115 Ω) without wheel rotation
680 – 960 mV

6) Measure voltage at resistance with wheel rotation and confirm voltage alternately changes between high and low voltages.If voltage does not change with wheel rotation, check sensor, mating encoder and their installation conditions.

Voltage at the resistance (115Ω) with wheel rotation
High voltage "a": 1360 – 1930 mV
Low voltage "b": 680 – 960 mV

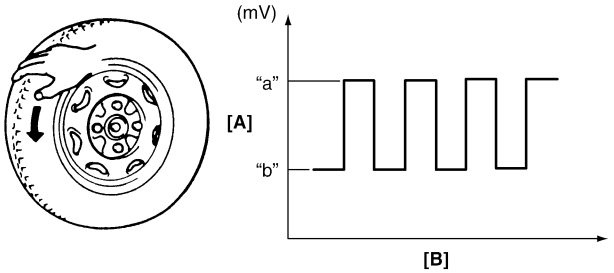

I5JB0A450027-01

[A]: Voltage	[B]: Time

Reference
When using oscilloscope for this check, check if peak-to-peak voltage and waveform meet specification.

Peak-to-peak voltage at the resistance (115 Ω) with wheel rotation
High voltage "a": 1360 to 1930 mV
Low voltage "b": 680 to 960 mV

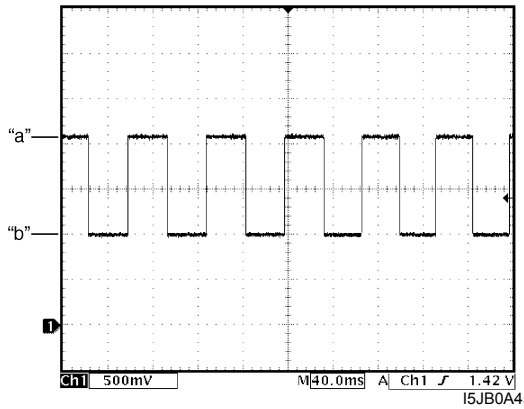

I5JB0A450028-02

Front Wheel Speed Sensor Removal and Installation

S7RW0A4506006

⚠ CAUTION

- **Do not pull wire harness when removing and installing front wheel speed sensor.**
- **Do not cause damage to surface of front wheel speed sensor and do not allow dust, etc. to enter its installation hole.**

Removal

1) Disconnect negative (–) cable from battery.
2) Disconnect front wheel speed sensor connector (1).
3) Hoist vehicle and remove wheel.
4) Remove harness clamp, clamp bolt (2).
5) Remove front wheel speed sensor (3) from knuckle.

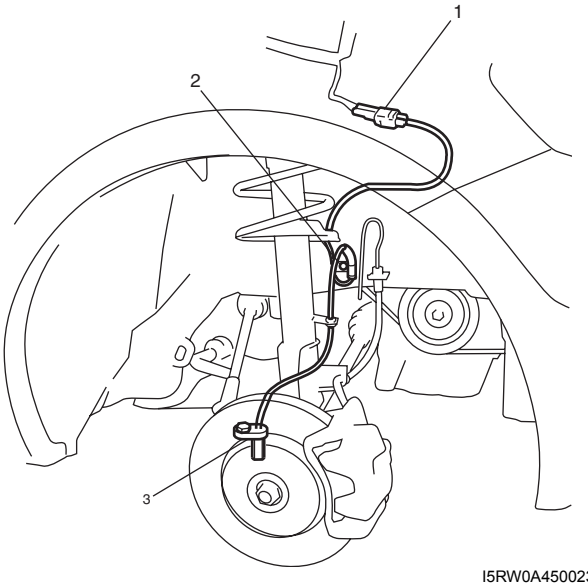

I5RW0A450023-01

Installation

1) Check that no foreign material is attached to sensor (1) and wheel speed sensor encoder (included in wheel hub assembly).
2) Install it by reversing removal procedure.

NOTE

Before fitting wheel speed sensor, be sure to silicon grease to its O-ring.

Tightening torque
Front wheel speed sensor bolt (a): 11 N·m (1.1 kgf-m, 8.0 lb-ft)
Front wheel speed sensor harness clamp bolt (b): 11 N·m (1.1 kgf-m, 8.0 lb-ft)

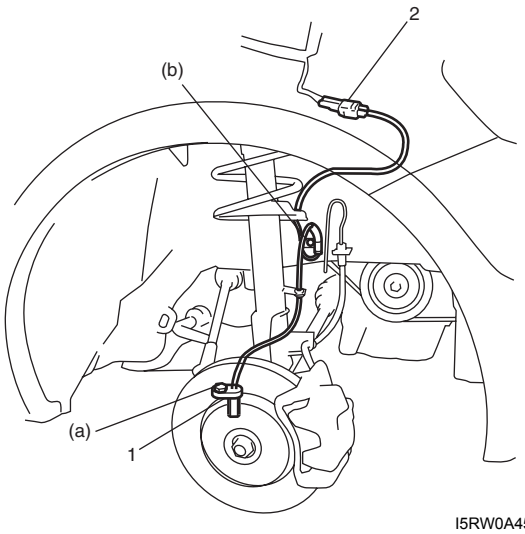

I5RW0A450025-01

3) Check that there is no clearance between sensor and knuckle.

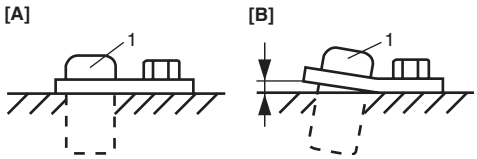

I5RW0A450024-01

[A]: OK	[B]: NG

Front and Rear Wheel Speed Sensor Inspection

S7RW0A4506007

Check sensor for damage.
If any malcondition is found, replace.

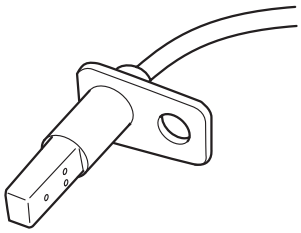

I5JB0A450031-01

Rear Wheel Speed Sensor Removal and Installation (4WD Model)

S7RW0A4506008

⚠ CAUTION

Rear wheel speed sensor is included in rear wheel hub assembly. If rear wheel speed sensor needs to be replaced, replace it as a rear wheel hub assembly.

For removal and Installation of rear wheel speed sensor (included in rear wheel hub), refer to “Rear Wheel Hub Assembly Removal and Installation in Section 2C”.

Rear Wheel Speed Sensor Removal and Installation (2WD Model)

S7RW0A4506009

⚠ CAUTION

- **Do not pull wire harness when removing and installing rear wheel speed sensor.**
- **Do not cause damage to surface of rear wheel speed sensor and do not allow dust, etc. to enter its installation hole.**

Removal

1) Disconnect negative (–) cable from battery.
2) Hoist vehicle, and remove wheel.
3) Disconnect rear wheel speed sensor connector.
4) Remove harness clamp.
5) Remove rear wheel speed sensor from wheel hub.

Installation

1) Check that no foreign material is attached to sensor and encoder (included in wheel hub assembly).
2) Install it by reversing removal procedure.

NOTE

Before fitting wheel speed sensor, be sure to silicon grease to its O-ring.

Tightening torque
Rear wheel speed sensor bolt: 11 N·m (1.1 kgf-m, 8.0 lb-ft)

3) Check that there is no clearance between sensor and wheel hub.

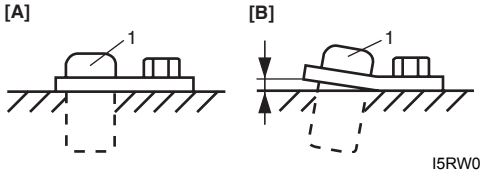

I5RW0A450024-01

[A]: OK	[B]: NG

Front Wheel Speed Sensor Encoder On-Vehicle Inspection

S7RW0A4506010

Before inspecting front wheel speed sensor encoder, remove front drive shaft referring to “Front Drive Shaft Assembly Removal and Installation: Front in Section 3A”.

- Check sensor encoder (1) for crack, damage or deformation.
- Turn wheel and check if sensor encoder rotation is free from eccentricity and looseness.
- Check that no foreign material is attached.

If any faulty is found, clean or replace. Refer to “Front Wheel Hub, Steering Knuckle and Wheel Bearing Removal and Installation in Section 2B”.

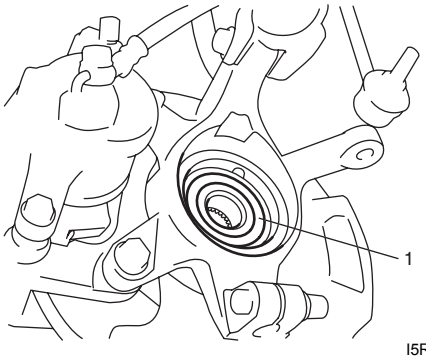

I5RW0A450026-01

Front Wheel Speed Sensor Encoder Removal and Installation

S7RW0A4506011

⚠ CAUTION

Front wheel speed sensor encoder is included in front wheel hub assembly. If front wheel speed sensor encoder needs to be replaced, replace it as a front wheel hub assembly.

For removal and installation of front wheel hub assembly, referring to “Front Wheel Hub, Steering Knuckle and Wheel Bearing Removal and Installation in Section 2B”.

Rear Wheel Speed Sensor Encoder On-Vehicle Inspection

S7RW0A4506012

For 4WD model

Refer to “Rear Wheel Speed Sensor On-Vehicle Inspection”.

For 2WD model

Before inspecting rear wheel speed sensor encoder, remove rear wheel speed sensor referring to “Rear Wheel Speed Sensor Removal and Installation (2WD Model)”.

- Check encoder (1) for crack, damage or deformation.
- Turn wheel and check if encoder rotation is free from eccentricity and looseness.
- Check that no foreign material is attached.

If any faulty is found, clean or replace. Refer to “Rear Wheel Hub Assembly Removal and Installation in Section 2C”.

Rear Wheel Speed Sensor Encoder Removal and Installation

S7RW0A4506013

⚠ CAUTION

Rear wheel speed sensor encoder is included in rear wheel hub assembly. If rear wheel speed sensor encoder needs to be replaced, replace it as a rear wheel hub assembly.

For removal and installation of front wheel hub assembly, referring to “Rear Wheel Hub Assembly Removal and Installation in Section 2C”.

G Sensor Removal and Installation (4WD Model)

S7RW0A4506014

⚠ CAUTION

- **Do not drop and shock G sensor. It will affect its original performance.**
- **Regarding G sensor removal and installation, confirm specified torque and use hand tool to avoid damage.**

Removal

1) Disconnect negative (–) cable from battery.
2) Remove center console box.
3) Disconnect G sensor connector, and remove G sensor (1).

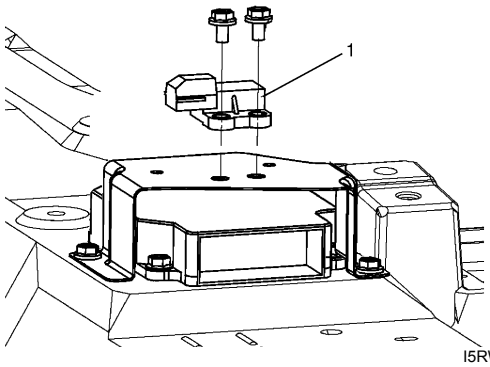

I5RW0A450027-01

Installation

1) Install G sensor (1), and connect G sensor connector.

Tightening torque
G sensor bolt (a): 3.0 N·m (0.3 kgf-m, 2.2 lb-ft)

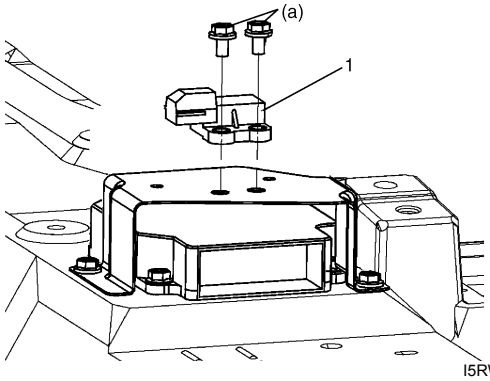

I5RW0A450028-01

2) Install center console box.
3) Connect negative cable to battery.

G Sensor Inspection (4WD Model)

S7RW0A4506015

Connect positive cable of 12 V battery to “A” terminal of sensor and ground cable to “C” terminal.
Then using voltmeter, check voltage between terminals “B” and “C”.
If measured voltage is not as specified, replace G sensor.

<u>G sensor specification</u>
When placed horizontally: 2 – 3 V
When placed upright with arrow upward: 3 – 4 V
When placed upright with arrow downward: 1 – 2 V

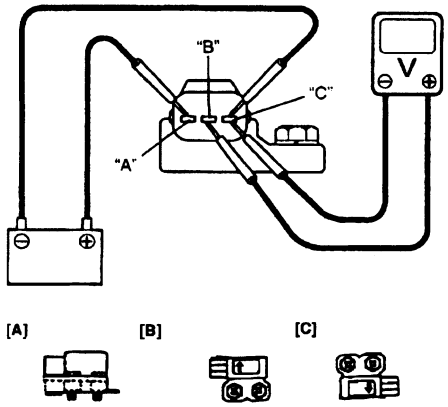

I5RW0A450029-01

[A]: Horizontal	[C]: Upright with arrow downward
[B]: Upright with arrow upward	

Specifications

Tightening Torque Specifications

S7RW0A4507001

Fastening part	Tightening torque			Note
	N·m	kgf-m	lb-ft	
Brake pipe flare nut	16	1.6	11.5	☞
ABS hydraulic unit / control module assembly bolt	9	0.9	6.5	☞
ABS hydraulic unit / control module assembly bracket bolt	26	2.6	19.0	☞
Front wheel speed sensor bolt	11	1.1	8.0	☞
Front wheel speed sensor harness clamp bolt	11	1.1	8.0	☞
Rear wheel speed sensor bolt	11	1.1	8.0	☞
G sensor bolt	3.0	0.3	2.2	☞

NOTE

The specified tightening torque is also described in the following.
“ABS Hydraulic Unit / Control Module Assembly Components”

Reference:
For the tightening torque of fastener not specified in this section, refer to “Fasteners Information in Section 0A”.

Special Tools and Equipment

Special Tool

S7RW0A4508001

09950–78220 Flare nut wrench (10 mm) ☞	SUZUKI scan tool — This kit includes following items. 1. Tech 2, 2. PCMCIA card, 3. DLC cable, 4. SAE 16/19 adapter, 5. Cigarette cable, 6. DLC loop back adapter, 7. Battery power cable, 8. RS232 cable, 9. RS232 adapter, 10. RS232 loop back connector, 11. Storage case, 12. ☞ / ☞ 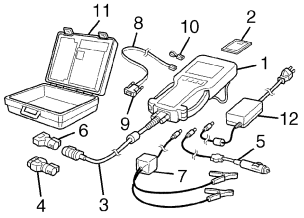

Electronic Stability Program

Precautions

Precautions in Diagnosing Troubles

S7RW0A4600001

To ensure that the trouble diagnosis is done accurately and smoothly, observe the following and follow "Electronic Stability Program Check".

- Diagnostic information stored in ESP® control module memory can be cleared as well as checked by using SUZUKI scan tool. Before using scan tool, read its Operator's (Instruction) Manual carefully to have good understanding as to what functions are available and how to use it.
- If the vehicles was operated in any of the following ways, ESP® warning light may light momentarily but this does not indicate anything abnormal in ESP®.
  - The vehicle was driven with parking brake pulled.
  - The vehicle was driven with brake dragging.
  - The vehicle was stuck in mud, sand, etc.
  - Wheel spin occurred while driving.
  - Wheel(s) was rotated while the vehicle was jacked up.
- Be sure to use the trouble diagnosis procedure as described in "Electronic Stability Program Check". Failure to follow it may result in incorrect diagnosis. (Some other diagnosis trouble code may be stored by mistake in the memory of ESP® control module during inspection.)
- When disconnecting ESP® control module connector (1), pull up the lock lever (2) of connector.
  When connecting, set the connector on ESP® hydraulic unit / control module assembly and pull down the lock lever (2) until it locks.

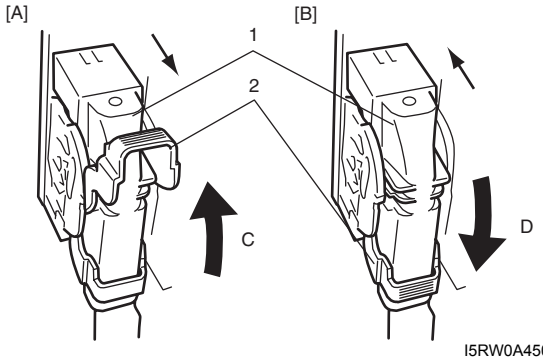

I5RW0A450001-01

[A]: Disconnect	[C]: Pull up to disconnect
[B]: Connect	[D]: Pull down to connect

- Communication of ECM, TCM (A/T model), BCM, 4WD control module, combination meter, keyless start control module, ESP® control module, steering angle sensor, yaw rate / G sensor and DLC (data link connector) is established by CAN (Controller Area Network).
  Therefore, be sure to read "Precautions for Installing Mobile Communication Equipment in Section 00 in related manual" before inspection and handling CAN communication line.
  For CAN communication system, refer to description on "CAN Communication System Description in Section 1A".

Precautions in On-Vehicle Service

S7RW0A4600002

When connector is connected to ESP® hydraulic unit / control module assembly, do not disconnect connectors of sensors with ignition switch ON. Otherwise, DTC will be set in ESP® control module.

Precautions in Hydraulic Unit Operation Check

S7RW0A4600003

ESP® hydraulic unit / control module assembly function is checked by correct wheel lock / release condition when brake pressure is pressurized / depressurized using SUZUKI scan tool. The hydraulic unit operation check referring to "ESP® Hydraulic Unit Operation Check" should be performed to confirm the correct brake pipe connection in the following cases.

- ESP® hydraulic unit / control module assembly was replaced.
- Brake pipe and/or hose were replaced.

Precautions in Sensor Calibration

S7RW0A4600004

Steering angle sensor transmits the absolute steering angle value calculated with the steering neutral position (calibration point) required by ESP® control module. TCS and stability control system use this set of data. When the following operation is done, calibration should be performed since the original calibration points are deleted.

- Power is not supplied to steering angle sensor. (battery and/or fuse is removed.)
- Steering angle sensor is replaced.
- Power is not supplied to ESP® control module. (battery, fuse and/or connector is removed.)
- ESP® hydraulic unit / control module assembly is replaced.

Perform sensor calibration according to "Sensor Calibration".

Precautions in Speedometer Test or Other Tests

S7RW0A4600005

When performing speedometer or other tests using speedometer tester or chassis dynamometer, ESP® function must be deactivated by ESP® OFF switch or using SUZUKI scan tool to complete the tests correctly.
When using SUZUKI scan tool, set to the “MISC. TEST” mode to stop the ESP® function. Refer to SUZUKI scan tool operator's manual for further details.

NOTE

Even if ESP® is controlled not to work by pushing ESP® OFF switch or using SUZUKI scan tool, ESP® is reactivated when ignition switch is turned ON after ignition switch is turned OFF.

General Description

Electronic Stability Program System Description

S7RW0A4601001

Electronic Stability Program (ESP®) is an auxiliary function to enable the vehicle to avoid a danger safely while the vehicle is running, stopping or turning.
Electronic Stability Program (ESP®) consists of following functions.

NOTE

ESP® is registered trademark of Daimler Chrysler AG.

Antilock Brake System (ABS) function
This function prevents tire locking which may occur when brake is applied suddenly or on slippery roads. With this function, as the vehicle is kept in the stable state and tires unlocked, the driver can avoid any obstacle by turning the steering wheel.

Electronic Brake force Distribution (EBD) function
This function distributes braking force of front and rear wheels properly according to the vehicle load condition.
With this function, the braking force of the front and rear wheels is controlled for the optimum effect to secure the maximum braking force regardless of the loadage.

Traction Control System (TCS) function
This function controls the engine and brake to prevent the driving wheels from spinning at the time of starting and accelerating.
Particularly, this function is helpful for safe driving on muddy or icy roads. When ESP® control module detects wheel spinning using information from the yaw rate sensor and wheel speed sensor, it lower the engine torque by closing the electronic controlled throttle and controlling ignition. At the same time, brake is applied to the spinning tire.

Stability Control function
This function controls the vehicle in the stable state by controlling the engine and braking so as to prevent the vehicle from over-steering or under-steering while turning.
When under-steering occurs, this function lowers the engine torque and applies brake to the inner rear wheel in the vehicle forward direction so as to prevent the vehicle from moving outward.
When over-steering occurs, this function applies brake to the outer front wheel in the vehicle forward direction so as to prevent the vehicle from moving inward.

Electronic Stability Program Construction

S7RW0A4601005

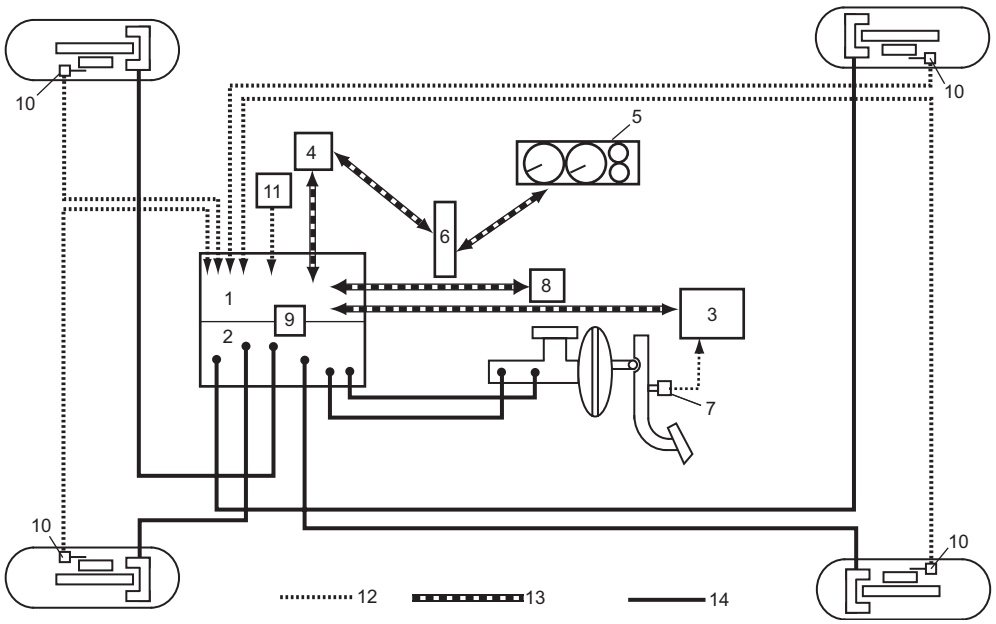

I7RS0B460001-03

1. ESP® control module	6. Steering angle sensor	11. ESP® OFF switch
2. Hydraulic unit	7. Brake light switch	12. Electronic signal
3. ECM	8. Yaw rate/ G sensor	13. CAN signal
4. BCM	9. Brake master cylinder pressure sensor	14. Hydraulic circuit
5. Combination meter	10. Wheel speed sensor	

Components of Electronic Stability Program

S7RW0A4601006

ESP® control module / hydraulic unit

The control module receives signals from each wheel speed sensor, ESP® OFF switch, brake master cylinder pressure sensor (7), steering angle sensor and yaw rate / G sensor. Based on these signals as information, the control module judges the vehicle conditions and controls the brake hydraulic pressure by combining the ON/OFF operation of the solenoid in the hydraulic unit and the pump motor operation.

The hydraulic unit contains an inlet solenoid valve (8) and an outlet solenoid valve (9) for each wheel as well as a cut solenoid valve (10) and a suction solenoid valve (11) for each hydraulic unit system. Also, a master cylinder pressure sensor, pump motor (6), etc. are included. The hydraulic pressure control is done in 3 modes of pressure increase, pressure keeping and pressure reduction.

- Pump motor:
  The pump motor turns on and applies pressure to each brake when braking is activated in the TCS and stability control state. When in the pressure reduction mode, it causes the brake fluid in the reservoir to return to the master cylinder (1).
- Brake master cylinder pressure sensor:
  This sensor detects the brake hydraulic pressure in the primary piping when brake is applied in the normal condition. Also, it detects the pump motor driving state when brake is applied in the TCS and stability control state.
- Inlet solenoid valve:
  In the ABS, TCS and stability control state, this valve is activated in the pressure keeping and pressure reduction modes to open the fluid passage, thereby restricting increase of the hydraulic pressure applied to the brake caliper.
- Outlet solenoid valve:
  In the ABS, TCS and stability control state, this valve is activated in the pressure reduction mode to open the fluid passage, thereby lowering the hydraulic pressure kept in the brake caliper.
- Cut solenoid valve:
  When brake is applied in the TCS and stability control state, this valve is activated to close the fluid passage, thereby causing the hydraulic pressure generated by the pump motor to apply to the brake caliper.
- Suction solenoid valve:
  When brake is applied in the TCS and stability control state, this valve is activated to open the fluid passage from the master cylinder to the pump motor.

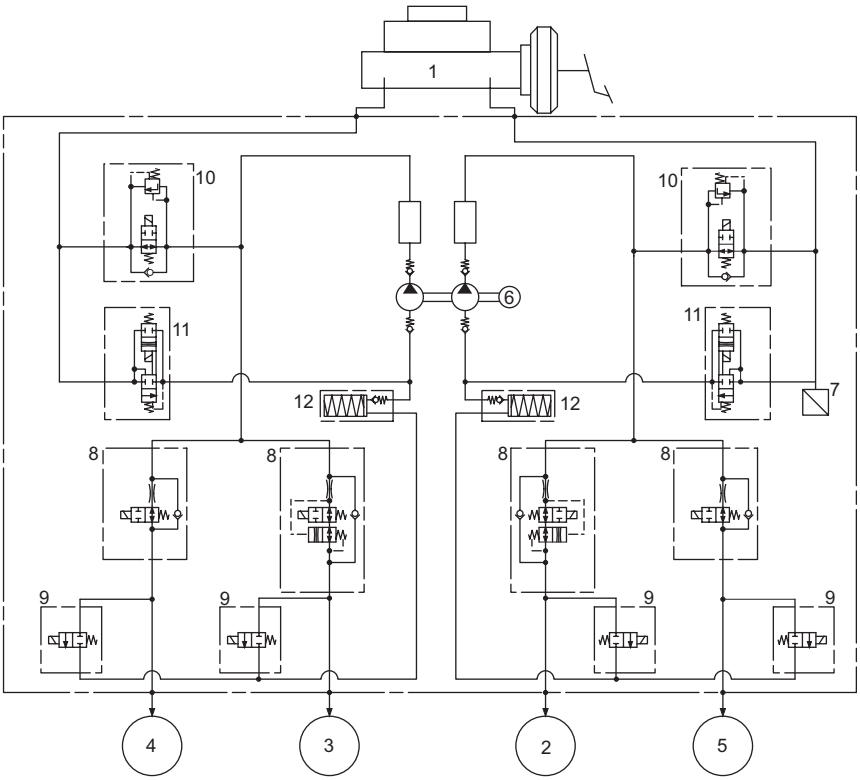

I7RS0B460002-01

2. Brake caliper (front-right)	3. Brake caliper (front-left)	4. Brake caliper (rear-right)	5. Brake caliper (rear-left)

Steering angle sensor

The steering angle sensor is assembled with the contact coil as a unit and mounted to the steering column. Detecting the angle as the steering wheel is turned, it sends that information to the ESP® control module.

Yaw rate / G sensor

The yaw rate / G sensor consists of the yaw rate (angular velocity in the vehicle turning direction) sensor and right-left G (acceleration in right-left direction) sensor and is mounted to the P/S controller bracket at the lower part of the center console. It detects the angular velocity in the vehicle turning direction and movement in the right-left direction, and then it sends that information to ESP® control module.

Wheel speed sensor

The vehicle speed is detected by the hall IC type wheel speed sensor (1) and encoder (4). The wheel speed sensor is fixed to the knuckle and includes a hall IC (3) having 2 hall elements (2).

The encoder consisting of a permanent magnet which has S/N electrodes turns inside of the wheel hub along with the wheel. The wheel speed sensor outputs alternate current.

As the cycle of the alternate current is in proportion to the revolution speed of the encoder, this AC signal (5) is converted into the voltage signal in the ESP® control module (6) for detection of the wheel speed.

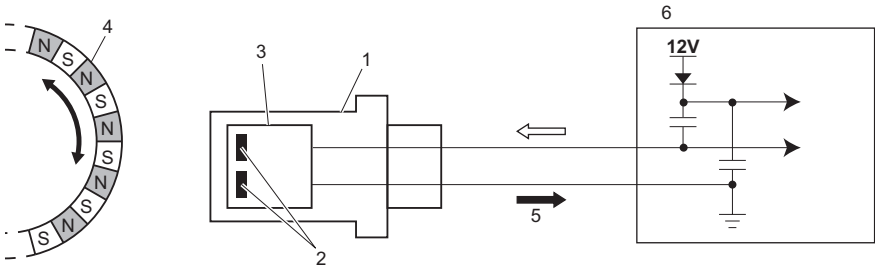

I7RS0B460003-01

ESP® OFF switch
This switch is momentary type. And this is attached to console box.
ESP® OFF light in combination meter lights up by pushing the switch more than 5 seconds.
Then it informs that ESP® (except for ABS) is controlled not to work to driver.
The operation of ESP® OFF is canceled when ignition switch is turned ON after ignition switch is turned OFF with ESP® OFF is operated.

On-Board Diagnosis System Description

S7RW0A4601002

ESP® control module is a component of ESP® hydraulic unit / control module assembly and has the following functions.

Self-Diagnosis Function
ESP® control module monitors each input and output signals. When ESP® control module detects any malfunction, some of ABS warning light (1), EBD warning light (brake warning light) (2), ESP® warning light (3), SLIP indicator light (4), ESP® OFF light (5) are turned ON and indicate the abnormality to driver.

- When ignition switch is turned ON, ABS warning light, EBD warning light, ESP® warning light, SLIP indicator light and ESP® OFF light lights for 2 seconds to check its circuit.
- When no abnormality is detected (the system is in good condition), ABS warning light, EBD warning light, ESP® warning light, SLIP indicator light and ESP® OFF light turn OFF after 2 seconds.
- When an abnormality in the system is detected, some of ABS warning light, EBD warning light, ESP® warning light, SLIP indicator light and/or ESP® OFF light are turned ON and the area where that abnormality lies is stored in the memory in ESP® control module.

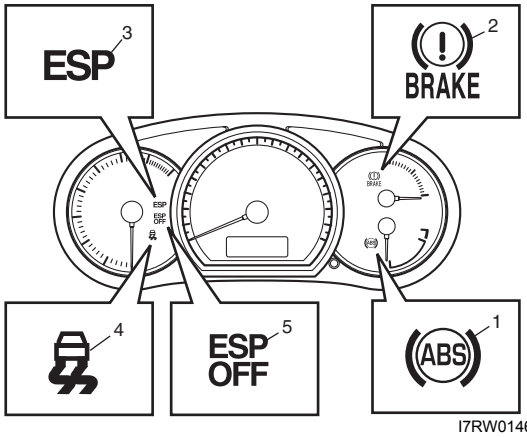

I7RW01460001-01

Fail-Safe Mode
When ESP® control module detects abnormality, the system goes into fail-safe mode. And some of functions of ABS, TCS, stability control system are shut down. For details of fail safe mode, refer to “Fail-Safe Table”.

Warning Light, Indicator Light Description

S7RW0A4601003

There are five types of warning light and indicator light in instrument cluster, which are controlled by ESP® control module. They give warning / indication to driver by changing the modes light ON / blinking / light OFF.

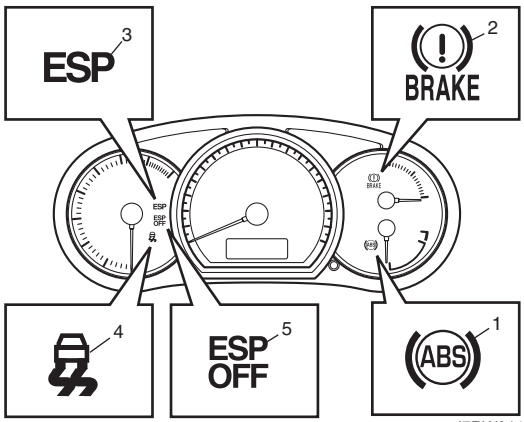

I7RW01460001-01

1. ABS warning light	4. SLIP indicator light
2. EBD warning light (brake warning light)	5. ESP® OFF light
3. ESP® warning light	

The followings are the condition and operation of warning lights and indicator lights.

Warning light / Indicator light	Condition and operation
ABS warning light	If ABS has abnormality, the light turns “ON”.
EBD warning light (brake warning light)	• If EBD system has abnormality, the light turns “ON”. • If bake fluid level in reservoir is minimum level, the light turns “ON”. • Parking brake switch is ON, the light turns “ON”.
ESP® warning light	If ESP® systems has abnormality, the light turns “ON”.
SLIP indicator light	• If stability control system and traction control system is active, the light blinks at 5 Hz. • If steering angle sensor calibration is incompleted (DTC C1075 is detected) and/or steering angle sensor message data is missing from CAN communication (DTC U0126 is detected), the light blinks at 1 Hz.
ESP® OFF light	If ESP® OFF switch is turned “ON”, the ESP® OFF light lights up. When it is “ON”, TCS and stability control system functions are controlled not to work.

CAN Communication System Description

S7RW0A4601004

Refer to “CAN Communication System Description in Section 1A” for CAN communication system description. ESP® control module communicates control data with each control module as follows.

ESP® Control Module Transmission Data

				ECM	4WD control module	Combination meter	Steering angle sensor
ESP® control module	Transmit	DATA	Torque down request	○			
			Wheel speed signal (front right)	○	○		
			Wheel speed signal (front left)	○	○		
			Wheel speed signal (rear right)	○	○		
			Wheel speed signal (rear left)	○	○		
			Clutch control request for A-4WD active		○		
			Clutch control request percent		○		
			ESP® status signal	○	○	○	
			ABS active	○	○		
			ABS indication			○	
			EBD indication			○	
			Steering angle neutral position				○

I6RW0H460017-01

ESP® Control Module Reception Data

				ECM	TCM (A/T model)	BCM	4WD control module	Steering angle sensor	Yaw rate / G sensor
ESP® control module	Receive	DATA	Engine torque signal	○					
			Engine speed signal	○					
			Accelerator position	○					
			Transmission gear selector position		○				
			Transmission actual gear		○				
			Parking brake switch signal			○			
			A-4WD clutch control request impossibility				○		
			A-4WD clutch engagement percent				○		
			Steering angle signal					○	
			Steering angle sensor related malfunction					○	
			Vehicle yaw rate signal						○
			Vehicle lateral G signal						○
			Yaw rate / G sensor related malfunction						○

I6RW0H460018-01

Schematic and Routing Diagram

Electronic Stability Program Schematic

S7RW0A4602001

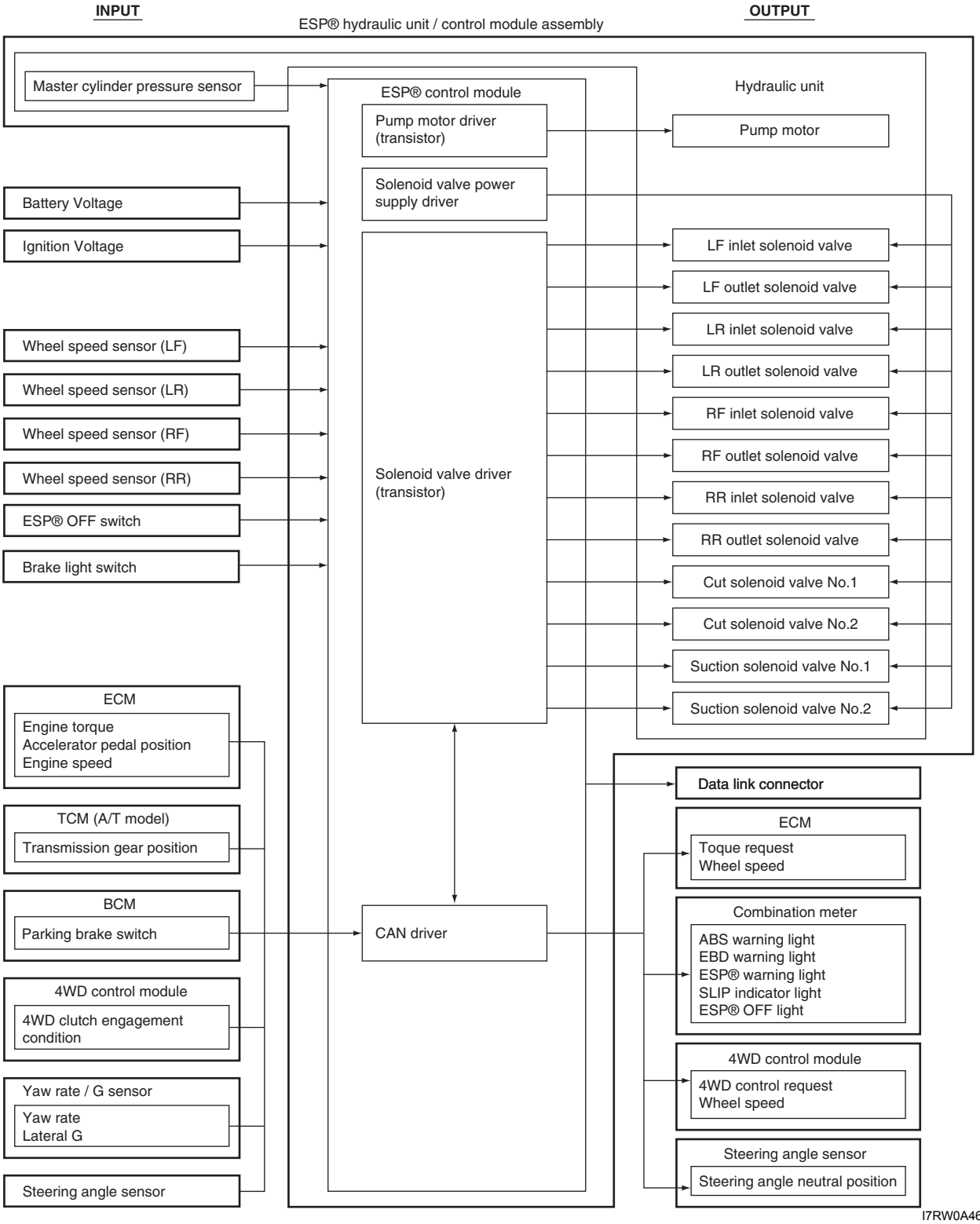

I7RW0A460001-01

Electronic Stability Program Wiring Circuit Diagram

S7RW0A4602002

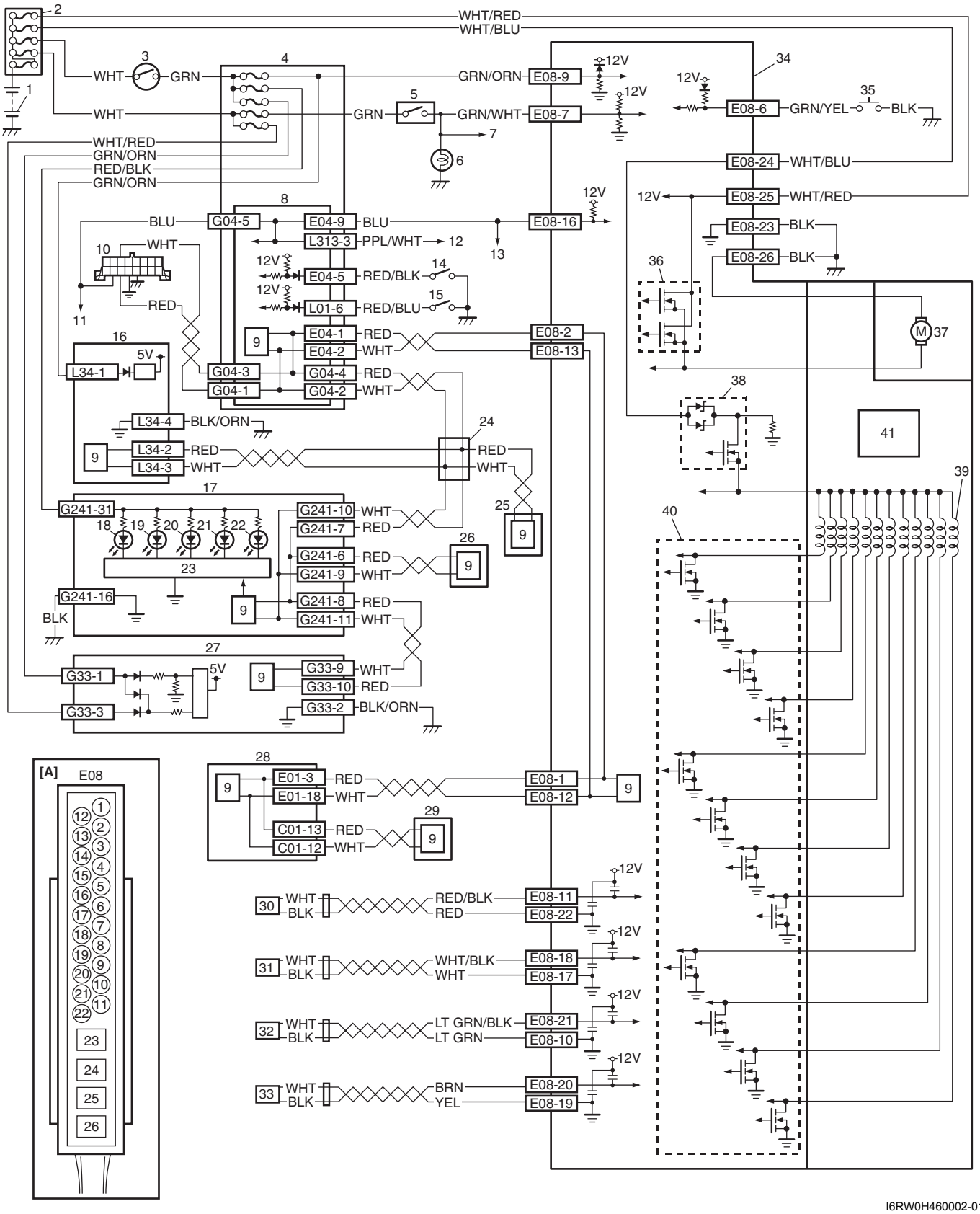

I6RW0H460002-01

[A]: Terminal arrangement of ESP® control module connector (viewed from terminal side)	14. Brake fluid level switch	28. ECM
1. Battery	15. Parking brake switch	29. TCM (A/T model)
2. Main fuse box	16. Yaw rate / G sensor	30. Left-front wheel speed sensor
3. Ignition switch	17. Combination meter	31. Right-front wheel speed sensor

4. Junction block assembly	18. ABS warning light	32. Left-rear wheel speed sensor
5. Brake light switch	19. EBD warning light (brake warning light)	33. Right-rear wheel speed sensor
6. Brake light	20. ESP® warning light	34. ESP® hydraulic unit / control module assembly
7. To ECM and shift lock relay (A/T model)	21. SLIP indicator light	35. ESP® OFF switch
8. BCM (included in junction block assembly)	22. ESP® OFF light	36. Pump motor driver (transistor)
9. CAN driver	23. Light driver module	37. Pump motor
10. Data link connector (DLC)	24. CAN junction connector	38. Solenoid valve power supply driver
11. To HVAC control module (auto A/C model) and 4WD control module	25. Keyless start control module	39. Solenoid valves
12. To SDM	26. 4WD control module	40. Solenoid valve driver (transistor)
13. To TCM (A/T model), P/S control module	27. Steering angle sensor	41. Master cylinder pressure sensor

Connector “E08” (ESP® Control Module Connector)

Terminal		Circuit
E08	1	CAN communication line (high) for ECM and TCM (A/T model)
	2	CAN communication line (high)
	3	—
	4	—
	5	—
	6	ESP® OFF switch input
	7	Brake light switch
	8	—
	9	Ignition switch
	10	Left-rear wheel speed sensor (–)
	11	Left-front wheel speed sensor (+)
	12	CAN communication line (low) for ECM and TCM (A/T model)
	13	CAN communication line (low)
	14	—
	15	—
	16	Serial communication line of data link connector
	17	Right-front wheel speed sensor (–)
	18	Right-front wheel speed sensor (+)
	19	Right-rear wheel speed sensor (–)
	20	Right-rear wheel speed sensor (+)
	21	Left-rear wheel speed sensor (+)
	22	Left-front wheel speed sensor (–)
	23	Ground
	24	Power supply for solenoid valve
	25	Power supply for pump motor
	26	Ground for pump motor

Component Location

Electronic Stability Program Component Location

S7RW0A4603001

NOTE

The figure shows left-hand steering vehicle. For right-hand steering vehicle, parts with (*) are installed at the opposite side.

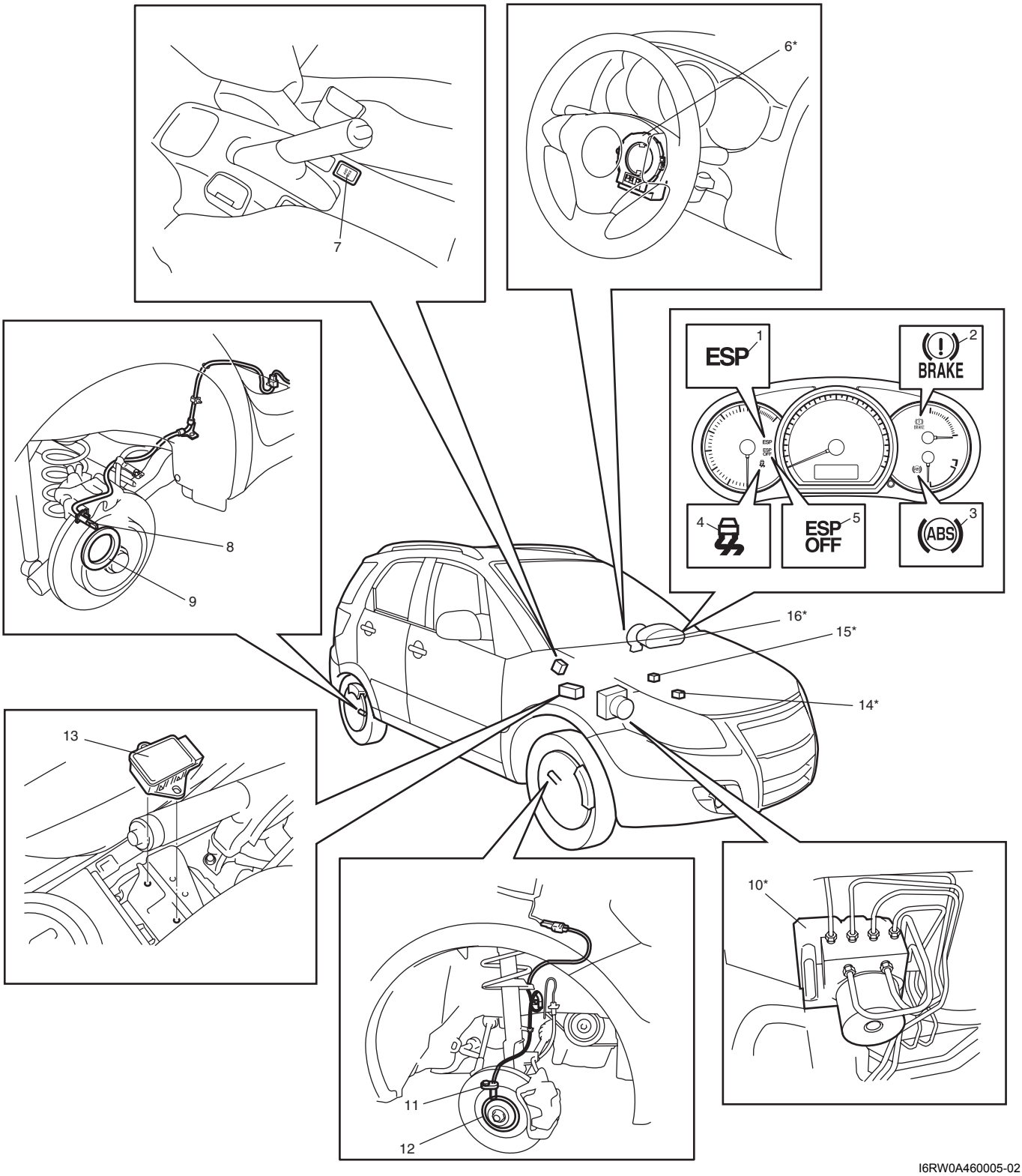

I6RW0A460005-02

1. ESP® warning light	7. ESP® OFF switch	13. Yaw rate / G sensor
2. EBD warning light (brake warning light)	8. Rear wheel speed sensor	14. Data link connector
3. ABS warning light	9. Rear wheel encoder	15. Brake light switch
4. SLIP indicator light	10. ESP® hydraulic unit / control module assembly	16. Combination meter
5. ESP® OFF light	11. Front wheel speed sensor	
6. Steering angle sensor	12. Front wheel encoder	

Diagnostic Information and Procedures

Electronic Stability Program Check

S7RW0A4604001

Refer to the following items for the details of each step.

Step	Action	Yes	No
1	☞ **Malfunction analysis** 1) Perform “Customer complaint analysis: ”. 2) Perform “Problem symptom confirmation: ”. 3) Perform “DTC check, record and clearance: ” and recheck DTC. *Is there any malfunction DTC?*	Go to Step 4.	Go to Step 2.
2	☞ **Driving test** 1) Perform “Step 2: Driving Test: ”. *Is trouble symptom identified?*	Go to Step 3.	Go to Step 6.
3	☞ **DTC check** 1) Perform “DTC Check”. *Is it malfunction code?*	Go to Step 4.	Go to Step 5.
4	☞ **ESP® check** 1) Inspect and repair referring to applicable DTC flow. *Does trouble recur?*	Go to Step 5.	Go to Step 7.
5	☞ **Brakes diagnosis** 1) Inspect and repair referring to “Brakes Symptom Diagnosis in Section 4A”. *Does trouble recur?*	Go to Step 3.	Go to Step 7.
6	☞ **Intermittent problem check** 1) Check intermittent troubles referring to “Intermittent and Poor Connection Inspection in Section 00 in related manual” and related circuit of trouble code recorded in Step 1. *Does trouble recur?*	Go to Step 4.	Go to Step 7.
7	☞ **Final confirmation test** 1) Perform “Step 7: Final Confirmation Test: ”. *Does trouble recur?*	Go to Step 3.	End.

Step 1: Malfunction Analysis

Customer complaint analysis

Record details of the problem (failure, complaint) and how it occurred as described by the customer.
For this purpose, use of such a questionnaire form as shown in the following will facilitate collecting information to the point required for proper analysis and diagnosis.

Customer questionnaire (Example)

Customer's name:	Model:	VIN:	
Date of issue:	Date of Reg:	Date of problem:	Mileage:

Problem Symptoms	● ESP® warning light abnormal: fails to turn on / fails to turn off ● ABS warning light abnormal: fails to turn on / fails to turn off ● EBD warning light abnormal: fails to turn on / fails to turn off ● Abnormal noise while vehicle is running: from motor, from valve, other_____ ● Wheel is locked at braking: ● Wheel is skidded at turning. ● Pump motor does not stop (running): ● Braking does not work: ● Other:
Frequency of occurrence	● Continuous/Intermittent (times a day, a month)/ other_____
Conditions for Occurrence of Problem	● Vehicle at stop & ignition switch ON: ● When starting: at initial start only/at every start/Other_____ ● Vehicle speed: while accelerating/while decelerating/at stop/ while turning/while running at constant speed/ other_____ ● Road surface condition: Paved road/rough road/snow-covered road/ other_____ ● Chain equipment:
Environmental Condition	● Weather: fair/cloudy/rain/snow/other_____ ● Temperature: °F (°C)
Diagnostic Trouble Code	● First check: Normal code/malfunction code ( ) ● Second check after test drive: Normal code/malfunction code ( )

I7RW0A460002-01

Problem symptom confirmation

If symptom in "Customer Questionnaire" is found or reproduced in the vehicle, confirm the symptom is problem or not. (This step should be done with the customer if possible.) Check warning lights related to brake system referring to "EBD Warning Light (Brake Warning Light) Check", "ABS Warning Light Check" and "ESP® Warning Light Check".

DTC check, record and clearance

Perform "DTC Check" procedure, record it and then clear it referring to "DTC Clearance".
Recheck DTC referring to "DTC Check".
When DTC which is recorded at DTC check procedure is detected again after performing DTC clearance, go to "Step 4: ESP® Check: " to proceed the diagnosis.
When DTC which is recorded at DTC check procedure is not indicated anymore after performing DTC clearance, ESP® control module does not perform the system diagnosis, or temporary abnormality may occur, therefore go to "Step 2: Driving Test: " to proceed the diagnosis.

Step 2: Driving Test
Test the vehicle at 40 km/h for more than a minute including left and right turns and check if any trouble symptom (such as ESP® warning light and/or ABS warning light) exists.
If the malfunction DTC is confirmed at ignition switch ON, proceed to Step 3.
If the malfunction DTC is not confirmed at ignition switch ON, proceed to Step 6.

Step 3: DTC Check
Recheck DTC referring to “DTC Check”.

Step 4: ESP® Check
According to ESP® Check for the DTC confirmation in Step 3, locate the cause of the trouble, namely in a sensor, switch, wire harness, connector, actuator assembly or other part and repair or replace faulty parts.

Step 5: Brakes Diagnosis
Check the parts or system suspected as a possible cause referring to “Brakes Symptom Diagnosis in Section 4A” and based on symptoms appearing on the vehicle (symptom obtained through Steps 1 and 2 and repair or replace faulty parts, if any).

Step 6: Intermittent Problem Check
Check parts where an intermittent trouble is easy to occur (e.g., wire harness, connector, etc.), referring to “Intermittent and Poor Connection Inspection in Section 00 in related manual” and related circuit of trouble code recorded in Step 1 to 3.

Step 7: Final Confirmation Test
Confirm that the problem symptom has gone and the ESP® is free from any abnormal conditions. If what has been repaired is related to the malfunction DTC, clear the DTC once referring to “DTC Clearance” and perform test driving and confirm that no DTC is indicated.

ESP® Warning Light Check

S7RW0A4604002

1) Turn ignition switch ON.
2) Check that ESP® warning light (1) comes ON for about 2 seconds and then goes off.
   If any faulty condition is found, advance to “ESP® Warning Light Does Not Come ON at Ignition Switch ON” or “ESP® Warning Light Comes ON Steady”.

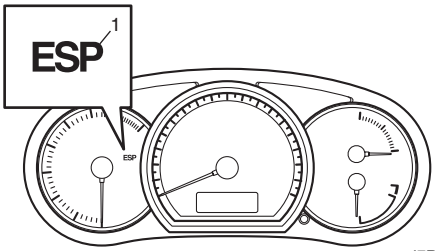

I7RW01460007-01

ABS Warning Light Check

S7RW0A4604041

1) Turn ignition switch ON.
2) Check that ABS warning light (1) comes ON for about 2 seconds and then goes off.
   If any faulty condition is found, advance to “ABS Warning Light Does Not Come ON at Ignition Switch ON” or “ESP® Warning Light Comes ON Steady”.

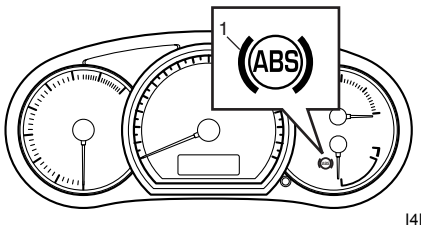

I4RS0A450007-01

EBD Warning Light (Brake Warning Light) Check

S7RW0A4604042

NOTE

Perform this check on a level place.

1) Turn ignition switch ON with parking brake applied.
2) Check that EBD warning light (brake warning light) (1) is turned ON.
3) Release parking brake with ignition switch ON and check that EBD warning light (brake warning light) goes off.
   If it doesn't go off, go to “EBD Warning Light (Brake Warning Light) Check”.

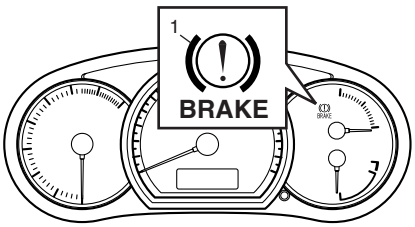

I4RS0A450008-01

DTC Check

S7RW0A4604005

1) Turn ignition switch to OFF position.
2) Connect SUZUKI scan tool to data link connector (1).

Special tool
(A): SUZUKI scan tool

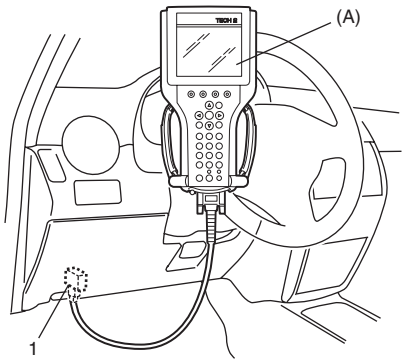

I5RW0A320008-01

3) Turn ignition switch to ON position.
4) Read DTC according to instructions displayed on SUZUKI scan tool and print it or write it down. Refer to SUZUKI scan tool operator's manual for further details.

NOTE

If SUZUKI scan tool can not communicate ESP® control module, perform "Serial Data Link Circuit Check".

5) After completing the check, turn ignition switch off and disconnect SUZUKI scan tool from DLC.

DTC Table

S7RW0A4604006

⚠ CAUTION

Be sure to perform "Electronic Stability Program Check" before starting diagnosis.

DTC (displayed on SUZUKI scan tool)	Diagnostic Items	Detecting condition (DTC will be set when detecting)	ABS warning light	EBD warning light	ESP® warning light
NO DTC	Normal	—	—	—	—
☞ C1016	Brake light switch	• Master cylinder pressure value and brake light switch signal is disagreed for specified time. • Brake light switch signal voltage becomes wrong value for specified time.	○	—	○
☞ C1017	Lateral G sensor	• Lateral G sensor signal is out of specified range. • Vehicle behavior and lateral G sensor signal is disagreed.	—	—	○
☞ C1020	Master cylinder pressure sensor power supply failure	Power supply voltage to master cylinder pressure sensor is too high or low in ESP® hydraulic unit / control module assembly.	○	—	○
☞ C1021	Right-front wheel speed sensor circuit	Wheel speed sensor circuit is opened, shorted to power, ground and/or each other circuit.	○	*1	○
☞ C1022	Right-front wheel speed sensor or encoder	• Wheel speed is different from other wheel speed (vehicle speed) for more than specified time. • Abnormal wheel speed sensor signal is detected for more than specified time.	○	*1	○
☞ C1023	Yaw rate sensor	• Yaw rate sensor signal is out of range. • Vehicle behavior and yaw rate signal is disagreed.	—	—	○

DTC (displayed on SUZUKI scan tool)	Diagnostic Items	Detecting condition (DTC will be set when detecting)	ABS warning light	EBD warning light	ESP® warning light
☞ C1024	Steering angle sensor	• Steering angle sensor internal defect is detected. • Steering angle sensor signal is out of specified range. • Vehicle behavior and steering angle sensor signal is disagreed.	—	—	○
☞ C1025	Left-front wheel speed sensor circuit	Wheel speed sensor circuit is opened, shorted to power, ground and/or each other circuit.	○	*1	○
☞ C1026	Left-front wheel speed sensor or encoder	• Wheel speed is different from other wheel speed (vehicle speed) for more than specified time. • Abnormal wheel speed sensor signal is detected for more than specified time.	○	*1	○
☞ C1027	ESP® OFF switch circuit	• ESP® OFF switch keeps ON for specified time. • ESP® OFF switch circuit is shorted to ground.	—	—	—
☞ C1028	Master cylinder pressure sensor circuit	• Master cylinder pressure sensor circuit is opened, shorted to power or ground circuit in ESP® control module. • Master cylinder pressure sensor signal is out of specified range in ESP® control module.	○	—	○
☞ C1031	Right-rear wheel speed sensor circuit	Wheel speed sensor circuit is opened, shorted to power, ground and/or each other circuit.	○	*1	○
☞ C1032	Right-rear wheel speed sensor or encoder	• Wheel speed is different from other wheel speed (vehicle speed) for more than specified time. • Abnormal wheel speed sensor signal is detected for more than specified time.	○	*1	○
☞ C1033	Wheel speed sensor deviation	• Two or more wheel speed sensor signals seem to be effected by temporary failure suspicion at the same time.	○	—	○
		• Three or more wheel speed sensor signals seem to be effected by temporary failure suspicion at the same time. • Two wheels or more are controlled by ABS for more than specified time.	○	○	○
☞ C1034	Yaw rate / G sensor assembly power supply failure	Power supply voltage to yaw rate / G sensor assembly is too high or low.	—	—	○
☞ C1035	Left-rear wheel speed sensor circuit	Wheel speed sensor circuit is opened, shorted to power, ground and/or each other circuit.	○	*1	○

DTC (displayed on SUZUKI scan tool)	Diagnostic Items	Detecting condition (DTC will be set when detecting)	ABS warning light	EBD warning light	ESP® warning light
☞ C1036	Left-rear wheel speed sensor or encoder	• Wheel speed is different from other wheel speed (vehicle speed) for more than specified time. • Abnormal wheel speed sensor signal is detected for more than specified time.	○	*1	○
☞ C1037	Steering angle sensor power supply failure	Power supply voltage to steering angle sensor is too low.	—	—	—
☞ C1038	Steering angle sensor detect rolling counter	ESP® control module rolling counter failure is detected by steering angle sensor.	—	—	○
☞ C1039	Yaw rate / G sensor assembly internal failure	• Yaw rate / G sensor assembly internal failure is detected. • Abnormal signal from yaw rate / G sensor assembly is detected.	—	—	○
☞ C1040	ESP® continuous operation	• ESP® control is active for more than specified time. • ESP® control module requested pressure reduction or keeping all wheel speed sensor for more than specified time.	○	—	○
☞ C1041	Right-front inlet solenoid	• Solenoid valve circuit is opened, shorted to power, ground and/or each valve in ESP® hydraulic unit / control module assembly. • Mismatching solenoid output and solenoid monitor is detected.	○	○	○
☞ C1042	Right-front outlet solenoid				
☞ C1043	Cut solenoid No.1				
☞ C1044	Cut solenoid No.2				
☞ C1045	Left-front inlet solenoid				
☞ C1046	Left-front outlet solenoid				
☞ C1051	Right-rear inlet solenoid				
☞ C1052	Right-rear outlet solenoid				
☞ C1053	Suction solenoid No.1				
☞ C1054	Suction solenoid No.2				
☞ C1055	Left-rear inlet solenoid				
☞ C1056	Left-rear outlet solenoid				
☞ C1057	Power supply voltage too high / too low	ESP® control module power supply voltage becomes 7.6 – 9.6 V.	○	—	○
		• ESP® control module power supply voltage is lower than 7.6 V. • ESP® control module power supply voltage is upper than 16.8 V.	○	○	○
☞ C1061	Pump motor circuit	• Defective pump motor and/or motor power supply voltage is too low. • Pump motor circuit in ESP® control module is opened, shorted to power or ground circuit.	○	○	○

DTC (displayed on SUZUKI scan tool)	Diagnostic Items	Detecting condition (DTC will be set when detecting)	ABS warning light	EBD warning light	ESP® warning light
☞ C1063	Solenoid valve power supply driver circuit	• Solenoid valve power supply driver circuit is shorted to power circuit in ESP® control module. • Solenoid valve power supply driver is stuck to ON position. • Output circuit from control unit is opened in ESP® control module.	○	—	○
		• Solenoid valve power supply driver circuit is opened, shorted to ground circuit in ESP® control module. • Solenoid valve power supply voltage is too low. • Solenoid valve power supply driver is stuck to OFF position. • Output circuit from control unit is shorted in ESP® control module. • Mismatching solenoid output and solenoid monitor is detected.	○	○	○
☞ C1071	Control module internal defect	ESP® control module internal defect is detected.	*2	*2	*2
☞ C1075	Steering angle sensor calibration *3	Missing steering angle sensor calibration point data is detected.	—	—	—
☞ C1091	CAN Invalid data from ECM	ECM sent invalid signal to ESP® control module.	—	—	○
☞ C1096	Yaw rate / G sensor assembly message counter error	Yaw rate / G sensor assembly message counter error is detected by ESP® control module.	—	—	○
☞ U0073	Control module communication bus off	• Communication is not available with all control modules connected by CAN. • CAN communication line is shorted to power, ground and/or each other circuit.	—	—	○
☞ U0100	Lost communication with ECM / PCM	ECM message data is missing from CAN communication.			
☞ U0101	Lost communication with TCM	TCM message data is missing from CAN communication.			
☞ U0114	Lost communication with four-wheel drive clutch control module	4WD control module message data is missing from CAN communication.			
☞ U0123	Lost communication with yaw rate sensor module	Yaw rate / G sensor assembly message data is missing from CAN communication.			
☞ U0126	Lost communication with steering angle sensor module	Steering angle sensor message data is missing from CAN communication.			

NOTE

- **"○" in ABS warning light, EBD warning light and ESP® warning light column of the above table means warning light is lit when DTC is detected.**
- ***1: If three or more wheel speed sensor are defective, EBD warning light are lit.**
- ***2: It is irregular whether warning lights can be lit by ESP® control module.**
- ***3: SLIP indicator light flashes continuously at intervals of 1 Hz.**

DTC Clearance

S7RW0A4604007

⚠ WARNING

When performing a driving test, select a safe place where there is neither any traffic nor any traffic accident possibility and be very careful during testing to avoid occurrence of an accident.

After repair or replace malfunction part(s), clear all DTCs by performing the following procedure or using SUZUKI scan tool.

1) Connect SUZUKI scan tool to data link connector in the same manner as when making this connection for DTC check.
2) Turn ignition switch to ON position.
3) Erase DTC according to instructions displayed on scan tool. Refer to scan tool operator's manual for further derails.
4) After completing the clearance, turn ignition switch OFF and disconnect scan tool from data link connector.
5) Perform "Driving Test" (Step 2 of "Electronic Stability Program Check") and "DTC Check" and confirm that NO DTC is displayed on scan tool.

Fail-Safe Table

S7RW0A4604008

When any of the following DTC(s) is detected, ESP® system is in fail-safe mode per its DTC and ABS, EBD, TCS / stability functions are deactivated until the resolution is applied.

DTC No.	Fail-safe operation			Fail-safe condition resolutive
	ABS	EBD	TCS / stability	
☞ C1016	—	○	—	When ESP® control module detects the system as normal, after ignition switch turned OFF to ON.
☞ C1017	○	○	—	
☞ C1020	—	○	—	
☞ C1021	—	*1	—	
☞ C1022	—	*1	—	When ESP® control module detects the system as normal. And estimated vehicle speed exceeds 14 km/h (9 mile/h), after ignition switch turned OFF to ON.
☞ C1023	○	○	—	When ESP® control module detects the system as normal, after ignition switch turned OFF to ON.
☞ C1024	○	○	—	
☞ C1025	—	*1	—	
☞ C1026	—	*1	—	When ESP® control module detects the system as normal. And estimated vehicle speed exceeds 14 km/h (9 mile/h), after ignition switch turned OFF to ON.
☞ C1027 *3	○	○	○	When ESP® control module detects the system as normal, after ignition switch turned OFF to ON. (ESP® OFF switch becomes effective.)
☞ C1028	—	○	—	When ESP® control module detects the system as normal, after ignition switch turned OFF to ON.
☞ C1031	—	*1	—	
☞ C1032	—	*1	—	When ESP® control module detects the system as normal. And estimated vehicle speed exceeds 14 km/h (9 mile/h), after ignition switch turned OFF to ON.
☞ C1033	—	*2	—	When ESP® control module detects the system as normal, after ignition switch turned OFF to ON.
☞ C1034	○	○	—	
☞ C1035	—	*1	—	
☞ C1036	—	*1	—	When ESP® control module detects the system as normal. And estimated vehicle speed exceeds 14 km/h (9 mile/h), after ignition switch turned OFF to ON.
☞ C1037	○	○	○	—

DTC No.	Fail-safe operation			Fail-safe condition resolutive
	ABS	EBD	TCS / stability	
☞ C1038	○	○	—	When ESP® control module detects the system as normal, after ignition switch turned OFF to ON.
☞ C1039	○	○	—	
☞ C1040 *4	—	○	—	
☞ C1041	—	—	—	
☞ C1042	—	—	—	
☞ C1043	—	—	—	
☞ C1044	—	—	—	
☞ C1045	—	—	—	
☞ C1046	—	—	—	
☞ C1051	—	—	—	
☞ C1052	—	—	—	
☞ C1053	—	—	—	
☞ C1054	—	—	—	
☞ C1055	—	—	—	
☞ C1056	—	—	—	
☞ C1057	—	*5	—	When ESP® control module detects the system as normal.
☞ C1061	—	○	—	When ESP® control module detects the system as normal. And estimated vehicle speed exceeds 14 km/h (9 mile/h), after ignition switch turned OFF to ON.
☞ C1063	—	*6	—	When ESP® control module detects the system as normal, after ignition switch turned OFF to ON.
☞ C1071	—	—	—	
☞ C1075	○	○	—	Steering angle sensor calibration completed.
☞ C1091	○	○	—	When ESP® control module detects the system as normal, after ignition switch turned OFF to ON.
☞ C1096	○	○	—	
☞ U0073	○	○	—	
☞ U0100	○	○	—	
☞ U0101	○	○	—	
☞ U0114	○	○	—	
☞ U0123	○	○	—	
☞ U0126	○	○	—	

NOTE

- **○: Activated**
- **X: Deactivated**
- ***1: If one wheel speed sensor is defective, EBD control function is activated. If two or more wheel speed sensor are defective, EBD control function is deactivated.**
- ***2: If one or two wheel speed sensor is defective, EBD control function is activated. If three or more wheel speed sensor are defective, EBD control function is deactivated.**
- ***3: ESP® OFF mode is cancelled and all control functions are activated.**
- ***4: If the control module requests pressure-decrease or pressure-hold for specified time or longer for all wheels, the state is judged failure, and the emergency brake is applied. The state returns to be normal after stop of the vehicle, if any other failures are not found.**
- ***5: EBD control function is activated only power supply circuit becomes 7.6 – 9.6 V malfunction.**
- ***6: EBD control function is activated only solenoid valve power supply driver circuit is shorted to power circuit and/or output circuit from control unit is opened malfunction.**

Scan Tool Data

S7RW0A4604009

The parameter data below are values measured with the scan tool when the normally operating vehicle is under the following conditions. When taking measurements for comparison by using the scan tool, be sure to check that the vehicle is under the following conditions.

- Apply parking brake and block wheels.
- Ignition switch ON.
- Turn OFF air conditioning (if equipped).
- Set the wheel in straight-ahead position and hands off steering wheel.
- Turn OFF all electric loads (except ignition).
- Check that there is no DTC.

Scan Tool Data	Standards	Condition
☞ Battery voltage	10.0 – 16.0 V	Ignition switch ON
☞ RF Wheel speed	0 km/h, 0.0 MPH	Vehicle is in stationary condition
☞ LF Wheel speed		
☞ RR Wheel speed		
☞ LR Wheel speed		
☞ Brake switch	ON	Brake pedal is depressed
	OFF	Brake pedal is released
☞ Valve power driver	ON	Ignition switch ON
☞ Master Cyl Press	0 ± 0.8 Mpa	Brake pedal is released
☞ G sensor (lateral)	0 ± 0.1 G	Vehicle is on the level
☞ Yaw rate sensor	0 ± 4 deg/s	Vehicle is on the level
☞ Steering angle Sen	0 ± 3°	Front wheels are in straight-ahead position
	Neutral	
☞ ESP® off state (cont)	ESP® ON	ESP® OFF switch is OFF condition
	ESP® OFF	ESP® OFF switch is ON condition
☞ Engine speed	0 RPM	Engine at stop with ignition switch turned ON
☞ Pump motor driver	OFF	Vehicle is in stationary condition
☞ Inlet solenoid RF	OFF	Vehicle is in stationary condition
☞ Inlet solenoid LF		
☞ Inlet solenoid RR		
☞ Inlet solenoid LR		
☞ Outlet solenoid RF	OFF	Vehicle is in stationary condition
☞ Outlet solenoid LF		
☞ Outlet solenoid RR		
☞ Outlet solenoid LR		
☞ Cut solenoid No.1	OFF	Vehicle is in stationary condition
☞ Cut solenoid No.2		
☞ Suction solenoid No.1	OFF	Vehicle is in stationary condition
☞ Suction solenoid No.2		
☞ Brake fluid level	enough	Brake fluid level is filled
	NOT enough	Brake fluid level is lower than minimum level

Scan Tool Data Definition

Battery volt (V)
Battery Voltage is an analog input signal read by the ESP® control module. Certain ESP® control module functions will be modified if the battery voltage falls below or rises above programmed thresholds.

RF Wheel speed, LF Wheel speed, RR Wheel speed and LR Wheel speed (km/h, MPH)
Wheel speed is ESP® control module internal parameter. It is computed by reference pulses from the wheel speed sensor.

Brake switch (ON, OFF)
This switch signal informs the ESP® control module whether the brake is active or not.

Valve power driver (ON, OFF)
ESP® control module monitor the supply voltage to solenoid valve power supply driver. If the voltage is supplied, ON is displayed. Beside, OFF is displayed.

Master Cyl Press (MPa)
Brake fluid pressure from brake master cylinder.

G sensor (lateral) (G)
Lateral acceleration is measured by yaw rate / G sensor and output to ESP® control module.
Right acceleration is displayed by "–", Left acceleration is displayed by "+".

Yaw rate sensor (Deg/s)
Yaw rate sensor is measured by yaw rate / G sensor and output to ESP® control module.
Right turn is displayed by "–", Left turn is displayed by "+".

Steering angle Sen (°)
Steering wheel rotation angle is measured by steering angle sensor and output to ESP® control module.
Right turn is displayed by "–", Left turn is displayed by "+".

Steering angle Sen (Neutral, Non neutral)
This indicates steering wheel angle measured by steering angle sensor is in straight-ahead or not.

ESP, off state (cont) (ESP, ON, ESP, OFF)
State of ESP® OFF switch.

Engine speed (RPM)
Engine speed computed by reference pulses from ECM.

Pump motor driver (ON, OFF)
This parameter indicates the operational condition of the pump motor driver (transistor).

Inlet solenoid RF, Inlet solenoid LF, Inlet solenoid RR, Inlet solenoid LR (ON, OFF)
This parameter indicates the operational condition of the inlet solenoid valve.

Outlet solenoid RF, Outlet solenoid LF, Outlet solenoid RR, Outlet solenoid LR (ON, OFF)
This parameter indicates the operational condition of the outlet solenoid valve.

Cut solenoid No. 1, Cut solenoid No. 2 (ON, OFF)
This parameter indicates the operational condition of left-front or right-rear commutation solenoid valve (No.1), or right-front or left-rear commutation solenoid valve (No.2).

Suction solenoid No. 1, Suction solenoid No. 2 (ON, OFF)
This parameter indicates the operational condition of left-front or right-rear high pressure switching solenoid valve (No.1), or right-front or left-rear high pressure switching solenoid valve (No.2).

Brake Fluid Level (enough, NOT enough)
This parameter indicates brake fluid level is enough or not by brake fluid level switch.

Visual Inspection

S7RW0A4604051

Check the following parts and systems visually.

Inspection Item		Referring section
Battery	Level, leakage	"Battery Description in Section 1J"
Connectors of electric wire harness	Disconnection, friction	"Intermittent and Poor Connection Inspection in Section 00"
Fuses	Burning	
Brake fluid	Level, leakage	"Brake Fluid Level Inspection in Section 4A"
Other parts that can be checked visually		

ESP® Warning Light Does Not Come ON at Ignition Switch ON

S7RW0A4604010

Wiring Diagram

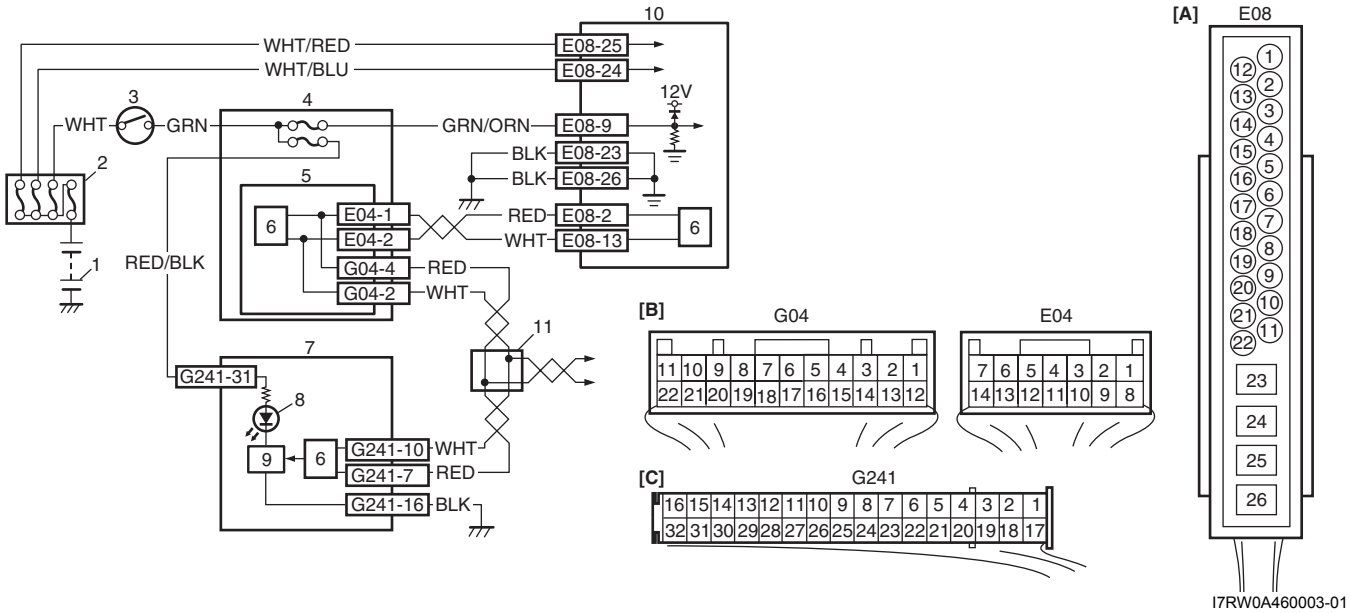

I7RW0A460003-01

[A]: ESP® control module connector (viewed from terminal side)	3. Ignition switch	8. ESP® warning light
[B]: BCM connector (viewed from harness side)	4. Junction block assembly	9. Light driver module
[C]: Combination meter connector (viewed from harness side)	5. BCM (included in junction block assembly)	10. ESP® hydraulic unit / control module assembly
1. Battery	6. CAN driver	11. CAN junction connector
2. Main fuse box	7. Combination meter	

Circuit Description

Operation (ON/OFF) of ESP® warning light is controlled by ESP® control module through light driver module in combination meter.

If ESP® system is in good condition, ESP® control module turns ESP® warning light ON at the ignition switch ON, keeps it ON for 2 seconds and then turns it OFF. If an abnormality in the system is detected, ESP® warning light is turned ON continuously by ESP® control module. Also, it is turned ON continuously by light driver module when the connector of ESP® control module is disconnected.

Troubleshooting

Step	Action	Yes	No
1	**Warning light check** 1) Turn ignition switch to ON position. *Do other warning lights come ON?*	Substitute a known-good combination meter and recheck. If warning light remains OFF, substitute a known-good ESP® hydraulic unit / control module assembly and recheck.	Go to Step 2.
2	**Fuse check** *Is circuit fuse for combination meter in good condition?*	Go to Step 3.	Replace fuse and check for short circuit to ground.

Step	Action	Yes	No
3	**Combination meter power source circuit check** 1) Remove combination meter with ignition switch turned OFF. 2) Check for proper connection to G241-31 and G241-16 wire of combination meter connector. 3) If OK then turn ON ignition switch and measure voltage at G241-31 wire of combination meter connector and vehicle body ground. *Is it 10 – 14 V?*	Go to Step 4.	Repair power source circuit for combination meter.
4	**Combination meter ground circuit check** 1) Measure resistance between G241-16 wire of combination meter connector and vehicle body ground. *Is resistance less than 2 Ω?*	Substitute a known-good combination meter and recheck.	“BLK” circuit open or high resistance.

ESP® Warning Light Comes ON Steady

S7RW0A4604043

Wiring Diagram

Refer to “Wiring Diagram” under “ESP® Warning Light Does Not Come ON at Ignition Switch ON”.

Circuit Description

Refer to “Circuit Description” under “ESP® Warning Light Does Not Come ON at Ignition Switch ON”.

Troubleshooting

Step	Action	Yes	No
1	**DTC check** 1) Perform diagnostic trouble code check. *Is there any DTC(s)?*	Go to “Electronic Stability Program Check”.	Go to Step 2.
2	**ESP® hydraulic unit / control module assembly power and ground circuit check** 1) Check that ESP® hydraulic unit / control module assembly power supply circuit and ground circuit is in good condition referring to “ESP® Hydraulic Unit / Control Module Assembly Power and Ground Circuit Check”. *Are check results OK?*	Go to Step 3.	Repair ESP® hydraulic unit / control module assembly power or ground circuit.
3	**CAN communication line circuit check** 1) Turn ignition switch to OFF position. 2) Disconnect connectors of all control modules communicating by means of CAN. 3) Check for proper connection to CAN communication line wire. 4) If OK then check CAN communication line circuit between control modules for open, short and high resistance. *Is each CAN communication line circuit in good condition?*	Substitute a known-good combination meter and recheck. If warning light remains ON, substitute a known-good ESP® hydraulic unit / control module assembly and recheck.	Repair circuit and recheck.

ABS Warning Light Does Not Come ON at Ignition Switch ON

S7RW0A4604044

Wiring Diagram

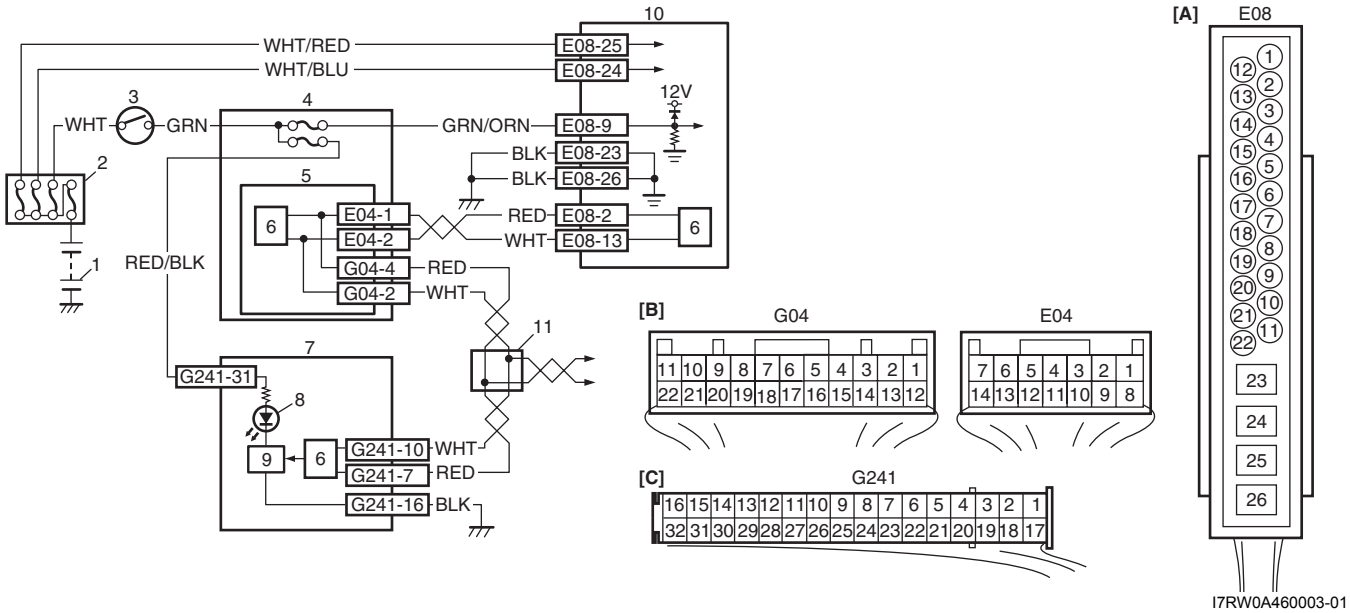

I7RW0A460003-01

[A]: ESP® control module connector (viewed from terminal side)	3. Ignition switch	8. ABS warning light
[B]: BCM connector (viewed from harness side)	4. Junction block assembly	9. Light driver module
[C]: Combination meter connector (viewed from harness side)	5. BCM (included in junction block assembly)	10. ESP® hydraulic unit / control module assembly
1. Battery	6. CAN driver	11. CAN junction connector
2. Main fuse box	7. Combination meter	

Circuit Description

Operation (ON/OFF) of ABS warning light is controlled by ESP® control module through light driver module in combination meter.

If ABS is in good condition, ESP® control module turns ABS warning light ON at the ignition switch ON, keeps it ON for 2 seconds and then turns it OFF. If an abnormality in the system is detected, ABS warning light is turned ON continuously by ESP® control module. Also, it is turned ON continuously by light driver module when the connector of ESP® control module is disconnected.

Troubleshooting

Refer to “Troubleshooting” under “ESP® Warning Light Does Not Come ON at Ignition Switch ON”.

ABS Warning Light Comes ON Steady

S7RW0A4604045

Wiring Diagram

Refer to “Wiring Diagram” under “ABS Warning Light Does Not Come ON at Ignition Switch ON”.

Circuit Description

Refer to “Circuit Description” under “ABS Warning Light Does Not Come ON at Ignition Switch ON”.

Troubleshooting

Refer to “Troubleshooting” under “ESP® Warning Light Comes ON Steady”.

EBD Warning Light (Brake Warning Light) Comes ON Steady

S7RW0A4604046

Wiring Diagram

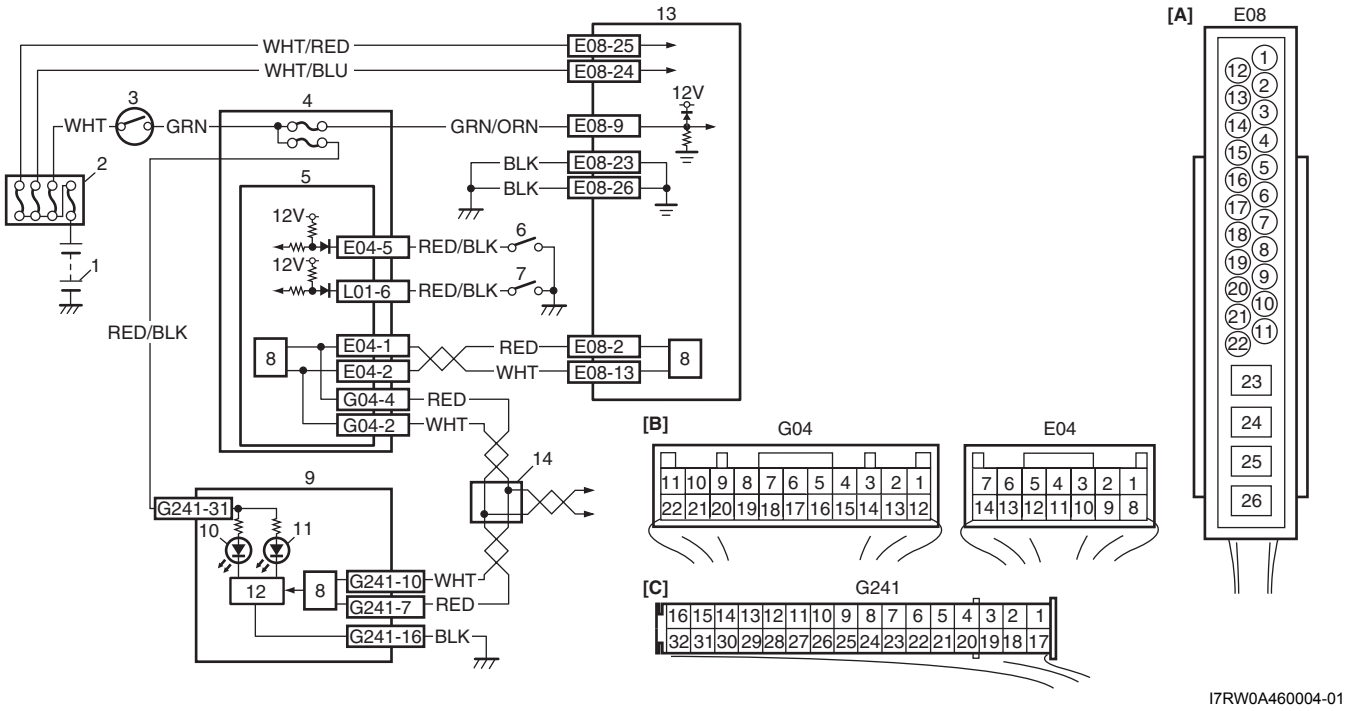

I7RW0A460004-01

[A]: ESP® control module connector (viewed from terminal side)	4. Junction block assembly	10. ABS warning light
[B]: BCM connector (viewed from harness side)	5. BCM (included in junction block assembly)	11. EBD warning light (brake warning light)
[C]: Combination meter connector (viewed from harness side)	6. Brake fluid level switch	12. Light driver module
1. Battery	7. Parking brake switch	13. ESP® hydraulic unit / control module assembly
2. Main fuse box	8. CAN driver	14. CAN junction connector
3. Ignition switch	9. Combination meter	

Circuit Description

EBD warning light (brake warning light) is controlled by ESP® control module and BCM through light driver module in combination meter.

If EBD system is in good condition, ESP® control module turns EBD warning light ON at the ignition switch ON, keeps it ON for 2 seconds and then turns it OFF.

EBD warning light is turned ON continuously at the following conditions.

- EBD system is an abnormality
- Connector of ESP® control module is disconnected
- Parking brake switch is ON
- Brake fluid level is lower than minimum level

The information of parking brake switch and brake fluid level are transmitted from BCM to light driver module in combination meter through CAN communication line.

Troubleshooting

Step	Action	Yes	No
1	**Parking brake and brake fluid level check** 1) Make sure that: • Parking brake is completely released. • Brake fluid level is upper than the minimum level. *Are the check results OK?*	Go to Step 2.	Release parking brake completely and/or replenish brake fluid.
2	**ABS warning light operation check** 1) Turn ignition switch to ON position. *Does ABS warning light come on steady?*	Perform “ABS Warning Light Comes ON Steady” previously outlined.	Go to Step 3.
3	**Parking brake switch circuit and brake fluid level switch circuit check** 1) Release parking brake completely, and replenish brake fluid. 2) Disconnect BCM connectors with ignition switch turned OFF. 3) Measure resistance between each terminal of “E04-5”, “L01-6” and vehicle body ground. *Are resistance $\infty\Omega$?*	Go to Step 4.	Check each applicable circuit for short to vehicle body ground. If OK then check parking brake switch and/or brake fluid level switch.
4	**DTC check of BCM** 1) Connect scan tool to data link connector with ignition switch turned OFF. 2) Turn ignition switch to ON position and check DTC of BCM. *Is there DTC U0073?*	Go to “DTC U0073 (No. 0073): Control Module Communication Bus Off in Section 10B”.	Go to Step 5.
5	**CAN communication line circuit check** 1) Turn ignition switch to OFF position. 2) Disconnect connectors of all control modules communicating by means of CAN. 3) Check for proper connection to CAN communication line wire. 4) If OK then check CAN communication line circuit between control modules for open, short and high resistance. *Is each CAN communication line circuit in good condition?*	Substitute a known-good combination meter and recheck. If EBD warning light remains OFF, substitute a known-good BCM and/or ESP® hydraulic unit / control module assembly and recheck.	Repair CAN communication line circuit.

Serial Data Link Circuit Check

S7RW0A4604047

Wiring Diagram

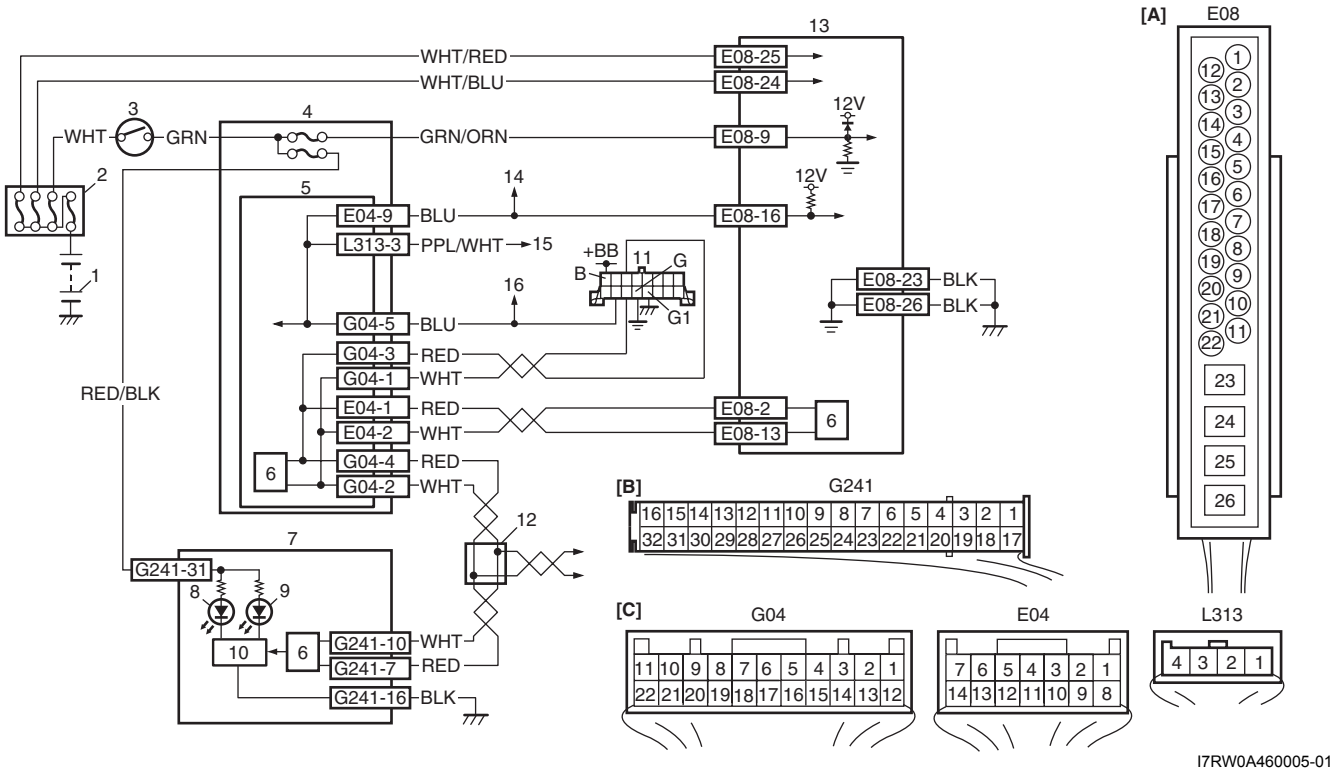

I7RW0A460005-01

[A]: ESP® control module connector (viewed from terminal side)	5. BCM (included in junction block assembly)	12. CAN junction connector
[B]: Combination meter connector (viewed from harness side)	6. CAN driver	13. ESP® hydraulic unit / control module assembly
[C]: BCM connector (viewed from harness side)	7. Combination meter	14. To TCM (A/T model), P/S control module
1. Battery	8. ESP® warning light	15. To SDM
2. Main fuse box	9. ABS warning light	16. To HVAC control module (auto A/C model) and 4WD control module
3. Ignition switch	10. Light driver module	
4. Junction block assembly	11. Data link connector (DLC)	

Troubleshooting

Step	Action	Yes	No
1	**Scan tool communication check** *Can scan tool communicate with BCM?*	Go to Step 2.	Go to Step 3.
2	**ESP® hydraulic unit / control module assembly power and ground circuit check** 1) Check that ESP® hydraulic unit / control module assembly power supply circuit and ground circuit is in good condition referring to “ESP® Hydraulic Unit / Control Module Assembly Power and Ground Circuit Check”. *Are check results OK?*	Go to Step 3.	Repair ESP® hydraulic unit / control module assembly power or ground circuit.
3	**Data link connector power source circuit check** 1) Disconnect scan tool from data link connector. 2) Check for proper connection to scan tool. 3) If OK then turn ignition switch to ON position, and measure voltage between terminal B of data link connector and vehicle body ground. *Is voltage 10 – 12 V?*	Go to Step 4.	Terminal B circuit open or shorted to ground.
4	**Data link connector ground circuit check** 1) Turn ignition switch to OFF position, and measure resistance between the following terminals: • Terminal G of data link connector and vehicle body ground. • Terminal G1 of data link connector and vehicle body ground. *Are resistance less than 2Ω?*	Go to Step 5.	Terminal G and/or G1 wire circuit open or high resistance.
5	**Serial communication circuit check** 1) Turn ignition switch to OFF position. 2) Disconnect connectors of all control modules communicating by serial data circuit. 3) Check proper connection at serial data circuit terminals. 4) If OK, then check for high resistance, open or short to power circuit or ground in serial data circuit. *Is check result in good condition?*	Go to Step 6.	Repair serial data circuit and recheck.
6	**CAN communication line circuit check** 1) Disconnect connectors of all control modules communicating by means of CAN. 2) Check for proper connection to CAN communication line wire. 3) If OK then check CAN communication line circuit between control modules for open, short and high resistance. *Is each CAN communication line circuit in good condition?*	Substitute a known-good ESP® hydraulic unit / control module assembly. If scan tool can not communicate still, substitute a known-good BCM and recheck.	Repair CAN communication line circuit and recheck.

DTC C1016: Brake Light Switch

S7RW0A4604016

Wiring Diagram

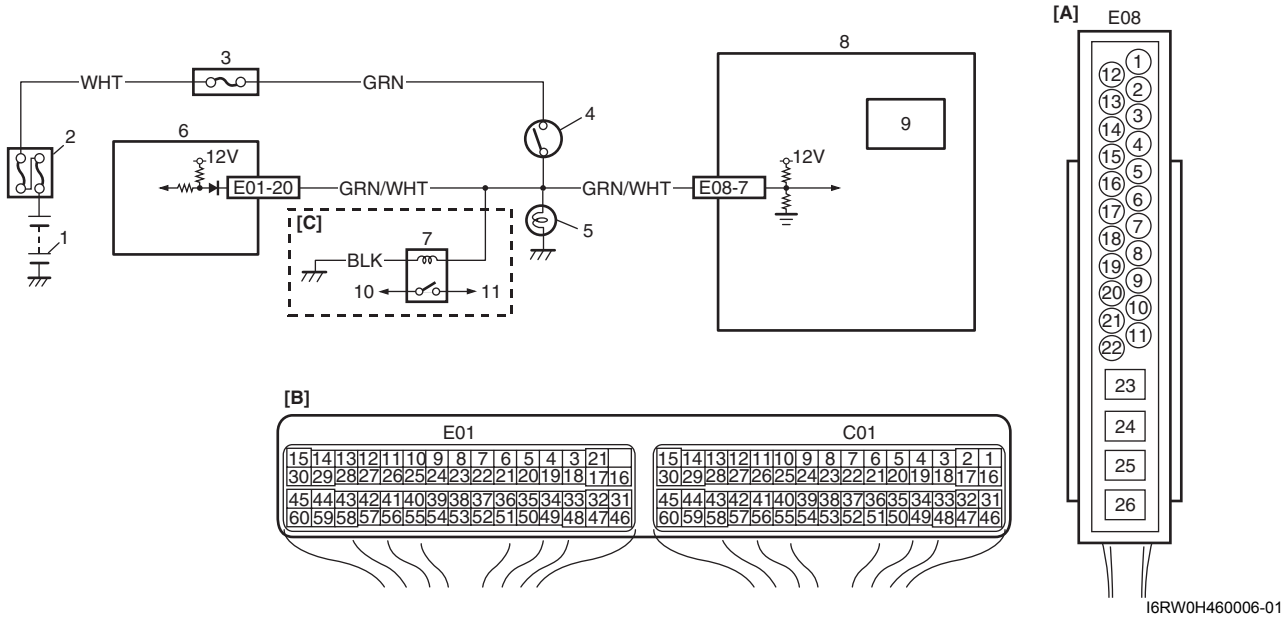

[A]: ESP® control module connector (viewed from terminal side)	3. Junction block assembly	8. ESP® hydraulic unit / control module assembly
[B]: ECM connector (viewed from harness side)	4. Brake light switch	9. Master cylinder pressure sensor
[C]: A/T model	5. Brake light	10. To shift lever
1. Battery	6. ECM	11. To transmission range sensor and TCM
2. Main fuse box	7. Shift lock relay (A/T model)	

DTC Detecting Condition and Trouble Area

DTC Detecting Condition	Trouble Area
• Master cylinder pressure behavior and brake light switch signal is disagreed for specified time. • Brake light switch signal voltage becomes 4.8 – 8.0 V for specified time.	• Brake light circuit • Brake light switch • ESP® control module

DTC Troubleshooting

Step	Action	Yes	No
1	*Was "Electronic Stability Program Check" performed?*	Go to Step 2.	Go to "Electronic Stability Program Check".
2	**Check brake light switch circuit** 1) Check brake light, brake light (brake pedal) switch and their circuit referring to "Brake Light Symptom Diagnosis in Section 9B". *Are they in good condition?*	Go to Step 3.	Repair or replace.
3	**Check brake light switch circuit** 1) Disconnect connectors from ECM and ESP® control module. 2) Remove shift lock relay. (A/T model) 3) Remove all of brake light bulb. 4) Check for proper connection to "E01-20" wire of ECM connector. 5) If connections are OK, check brake light switch circuit for the following. • Resistance of "GRN/WHT" wire terminal of brake light switch between brake light switch connector and ECM connector is less than 1 Ω (continuity check) • Resistance between "GRN/WHT" wire terminal of brake light switch connector and vehicle body ground is infinity (ground short check) • Voltage of between "GRN/WHT" wire terminal of brake light switch connector and vehicle body ground is 0 V with ignition switch tuned ON (power short check) *Are they in good condition?*	Substitute a known-good ESP® hydraulic unit / control module assembly and recheck. If DTC C1016 is still detected, substitute a known-good ECM and/ or check shift lock relay (A/T model).	Repair or replace defective wire.

DTC C1017 / C1023: Lateral G Sensor / Yaw Rate Sensor

S7RW0A4604017

DTC Detecting Condition and Trouble Area

DTC Detecting Condition	Trouble Area
C1017: • Lateral G sensor signal is out of specified range. • Vehicle behavior and lateral G sensor signal is disagreed. **C1023:** • Yaw rate sensor signal is out of range. • Vehicle behavior and yaw rate signal is disagreed.	• Yaw rate / G sensor • ESP® control module

DTC Troubleshooting

Step	Action	Yes	No
1	*Was "Electronic Stability Program Check" performed?*	Go to Step 2.	Go to "Electronic Stability Program Check".
2	**DTC check for ESP®** 1) Connect scan tool to DLC with ignition switch turned OFF. 2) Turn ignition switch ON and check DTC for ESP®. *Are DTC U0073 and/or U0123 detected?*	Go to applicable DTC diag. flow.	Go to Step 3.
3	**Check yaw rate / G sensor** 1) Check yaw rate / G sensor referring to "Yaw Rate / G Sensor On-Vehicle Inspection". *Is it good condition?*	Substitute a known-good ESP® hydraulic unit / control module assembly and recheck.	Substitute a known-good yaw rate / G sensor and recheck.

DTC C1020 / C1028: Master Cylinder Pressure Sensor Power Supply Failure / Circuit

S7RW0A4604018

DTC Detecting Condition and Trouble Area

DTC Detecting Condition	Trouble Area
DTC C1020: Power supply voltage to master cylinder pressure sensor is too high or low in ESP® hydraulic unit / control module assembly. **DTC C1028:** • Master cylinder pressure sensor circuit is opened, shorted to power or ground circuit in ESP® control module. • Master cylinder pressure sensor signal is out of specified range in ESP® control module.	• ESP® control module

DTC Troubleshooting

Step	Action	Yes	No
1	*Was "Electronic Stability Program Check" performed?*	Go to Step 2.	Go to "Electronic Stability Program Check".
2	**Check ESP® hydraulic unit / control module assembly power and ground circuit** 1) Check that ESP® hydraulic unit / control module assembly power supply circuit and ground circuit is in good condition referring to "ESP® Hydraulic Unit / Control Module Assembly Power and Ground Circuit Check". *Are check results OK?*	Substitute a known-good ESP® hydraulic unit / control module assembly and recheck.	Repair ESP® hydraulic unit / control module assembly power or ground circuit.

DTC C1021 / C1022 / C1025 / C1026 / C1031 / C1032 / C1035 / C1036: Wheel Speed Sensor Circuit / Sensor or Encoder

S7RW0A4604019

DTC C1021 / C1025 / C1031 / C1035: Right-Front / Left-Front / Right-Rear / Left-Rear Wheel Speed Sensor Circuit
DTC C1022 / C1026 / C1032 / C1036: Right-Front / Left-Front / Right-Rear / Left-Rear Wheel Speed Sensor or Encoder

Wiring Diagram

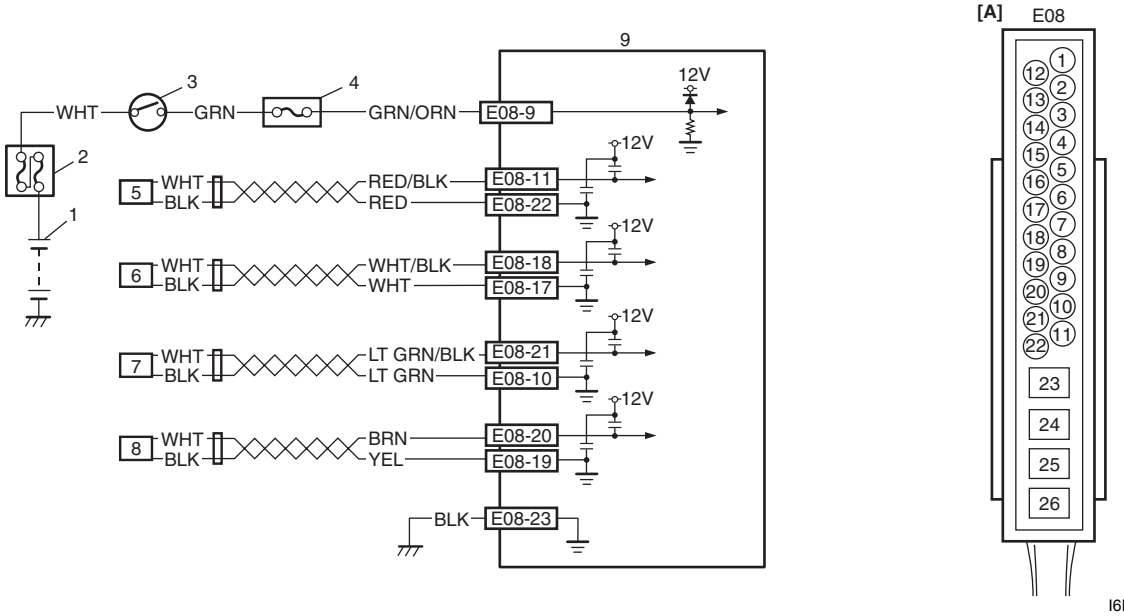

[A]: ESP® control module connector (viewed from terminal side)	4. Junction block assembly	8. Right-rear wheel speed sensor
1. Battery	5. Left-front wheel speed sensor	9. ESP® hydraulic unit / control module assembly
2. Main fuse box	6. Right-front wheel speed sensor	
3. Ignition switch	7. Left-rear wheel speed sensor	

DTC Detecting Condition and Trouble Area

DTC Detecting Condition	Trouble Area
C1021, C1025, C1031, C1035: Wheel speed sensor circuit is opened, shorted to power, ground and/or each other circuit. **C1022, C1026, C1032, C1036:** • Wheel speed is different from other wheel speed (vehicle speed) for more than specified time. • Abnormal wheel speed sensor signal is detected for more than specified time.	• Wheel speed sensor • Wheel speed sensor circuit • Wheel encoder • ESP® control module

NOTE

When the vehicle was operated in any of the following ways, one of these DTCs may be set even when the sensor is in good condition. If such possibility is suspected, clear DTC once referring to "DTC Clearance" and after performing the driving test as described in Step 2 of "Electronic Stability Program Check", check whether or not any abnormality exists.

- **The vehicle was driven with parking brake pulled.**
- **Wheel spin occurred while driving.**
- **Wheel(s) was turned while the vehicle was jacked up.**
- **The vehicle was stuck.**

DTC Troubleshooting

Step	Action	Yes	No
1	*Was "Electronic Stability Program Check" performed?*	Go to Step 2.	Go to "Electronic Stability Program Check".
2	**Check tire condition** 1) Check that tire pressure is specifications. *Are they in good condition?*	Go to Step 3.	Replace tire or adjust tire pressure and recheck.
3	**Wheel speed sensor circuit check** 1) Disconnect ESP® hydraulic unit / control module connector and applicable wheel speed sensor connector with ignition switch turned OFF. 2) Check for proper connection to ESP® hydraulic unit / control module connector at applicable terminals and terminals of applicable wheel speed sensor. 3) If OK then check applicable wheel speed sensor circuit for open, short and high resistance. *Is each applicable wheel speed sensor circuit in good condition?*	Go to Step 4.	Repair circuit and recheck.
4	**Wheel speed sensor check** 1) Inspection applicable wheel speed sensor referring to "Front and Rear Wheel Speed Sensor Inspection in Section 4E". *Is it in good condition?*	Go to Step 5.	Clean or replace.
5	**Wheel speed sensor encoder check** 1) Inspection applicable wheel speed sensor encoder referring to "Rear Wheel Speed Sensor Encoder On-Vehicle Inspection in Section 4E" and/or "Rear Wheel Speed Sensor Encoder On-Vehicle Inspection in Section 4E". *Is it in good condition?*	Go to Step 6.	Clean or replace wheel hub assembly.
6	**Wheel speed sensor signal check** 1) Inspection applicable wheel speed sensor referring to "Front and Rear Wheel Speed Sensor On-Vehicle Inspection in Section 4E". *Is it in good condition?*	Substitute a known-good wheel hub assembly and recheck. If DTC detected, substitute a known-good ESP® hydraulic unit / control module and recheck.	Replace wheel speed sensor and recheck.

DTC C1024: Steering Angle Sensor

S7RW0A4604020

DTC Detecting Condition and Trouble Area

DTC Detecting Condition	Trouble Area
• Steering angle sensor internal defect is detected. • Steering angle sensor signal is out of specified range. • Vehicle behavior and steering angle sensor signal is disagreed.	• CAN communication circuit • Steering angle sensor • ESP® control module

DTC Troubleshooting

Step	Action	Yes	No
1	*Was "Electronic Stability Program Check" performed?*	Go to Step 2.	Go to "Electronic Stability Program Check".
2	**DTC check for ESP®** 1) Connect scan tool to DLC with ignition switch turned OFF. 2) Turn ignition switch ON and check DTC for ESP®. *Are DTC U0073 and/or U0126 detected?*	Go to applicable DTC diag. flow.	Go to Step 3.
3	**Check steering angle sensor** 1) Check steering angle sensor referring to "Steering Angle Sensor On-Vehicle Inspection". *Is it good condition?*	Substitute a known-good ESP® hydraulic unit / control module assembly and recheck.	Substitute a known-good steering angle sensor and recheck.

DTC C1027: ESP® OFF Switch

S7RW0A4604021

Wiring Diagram

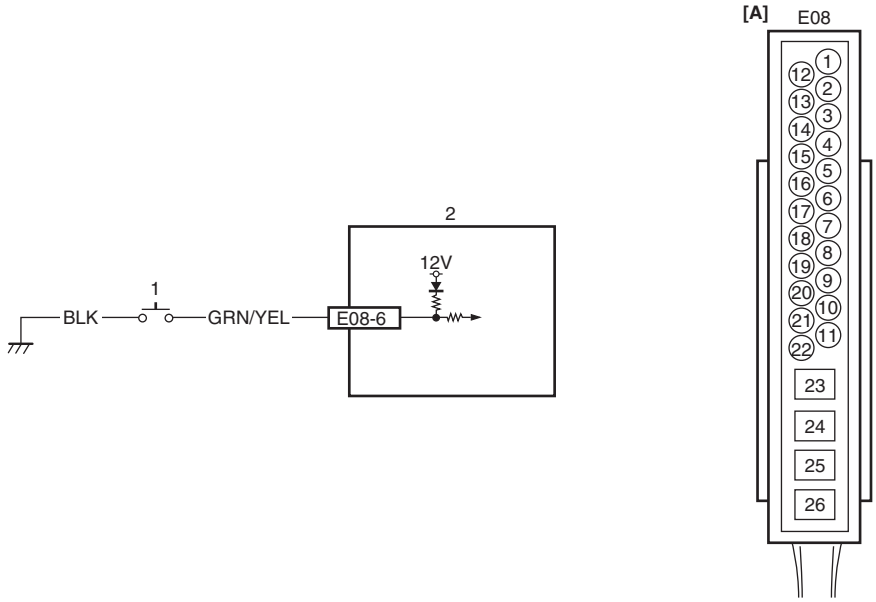

I6RW0H460008-01

[A]: ESP® control module connector (viewed from terminal side)	1. ESP® OFF Switch	2. ESP® hydraulic unit control module assembly

DTC Detecting Condition and Trouble Area

DTC Detecting Condition	Trouble Area
• ESP® OFF switch keeps ON for 60 seconds. • ESP® OFF switch circuit is shorted to ground.	• ESP® OFF switch • ESP® OFF switch circuit • ESP® control module

DTC Troubleshooting

Step	Action	Yes	No
1	*Was "Electronic Stability Program Check" performed?*	Go to Step 2.	Go to "Electronic Stability Program Check".
2	**Check ESP® OFF switch** 1) Turn ignition switch to OFF position. 2) Remove ESP® OFF switch referring to "ESP® OFF Switch Removal and Installation". 3) Check for proper connection at each terminal of ESP® OFF switch. 4) If OK, then check ESP® OFF switch referring to "ESP® OFF Switch Inspection". *Is it good condition?*	Go to Step 3.	Replace ESP® OFF switch.
3	**Check ESP® OFF switch circuit** 1) Disconnect ESP® control module connector. 2) Check for proper connection to ESP® control module connector at "E08-6" terminal. 3) If OK, then check resistance between connector terminal "E08-6" and vehicle body ground. *Is resistance infinity?*	Substitute a known-good ESP® hydraulic unit / control module assembly and recheck.	"GRN/YEL" wire circuit is shorted to ground.

DTC C1033: Wheel Speed Sensor Deviation

S7RW0A4604022

Wiring Diagram

Refer to "DTC C1021 / C1022 / C1025 / C1026 / C1031 / C1032 / C1035 / C1036: Wheel Speed Sensor Circuit / Sensor or Encoder".

DTC Detecting Condition and Trouble Area

DTC Detecting Condition	Trouble Area
• Two or more sensor signals seem to be effected by temporary failure suspicion at the same time. • Two wheels or more are controlled by ABS for more than specified time.	• Wheel speed sensor • Wheel speed sensor circuit • Wheel encoder • ESP® control module • Tire (flat tire)

DTC Troubleshooting

Step	Action	Yes	No
1	*Was "Electronic Stability Program Check" performed?*	Go to Step 2.	Go to "Electronic Stability Program Check".
2	**Check DTC for ESP®** 1) Connect scan tool to DLC with ignition switch turned OFF. 2) Turn ignition switch ON and check DTC for ESP®. *Is DTC C1021, C1022, C1025, C1026, C1031, C1032, C1035 and/or C1036 detected together?*	Go to "DTC C1021 / C1022 / C1025 / C1026 / C1031 / C1032 / C1035 / C1036: Wheel Speed Sensor Circuit / Sensor or Encoder" and recheck.	Go to Step 3.
3	**Check tire condition** 1) Check that tire pressure is specifications. *Are they in good condition?*	Go to Step 3.	Replace tire or adjust tire pressure and recheck.
4	**Wheel speed sensor circuit check** 1) Disconnect ESP® hydraulic unit / control module connector and all wheel speed sensor connectors with ignition switch turned OFF. 2) Check for proper connection to ESP® hydraulic unit / control module connector and terminals of wheel speed sensor. 3) If OK then check all wheel speed sensors circuit for open, short and high resistance. *Are wheel speed sensor circuits in good condition?*	Go to Step 5.	Repair circuit and recheck.
5	**Wheel speed sensor check** 1) Inspection all wheel speed sensors referring to "Front and Rear Wheel Speed Sensor On-Vehicle Inspection in Section 4E". *Are they in good condition?*	Go to Step 6.	Clean or replace.
6	**Wheel speed sensor encoder check** 1) Inspection all wheel speed sensor encoders referring to "Front Wheel Speed Sensor Encoder On-Vehicle Inspection in Section 4E" and/or "Rear Wheel Speed Sensor Encoder On-Vehicle Inspection in Section 4E". *Are they in good condition?*	Go to Step 7.	Clean or replace wheel hub assembly.
7	**Wheel speed sensor signal check** 1) Inspection all wheel speed sensors referring to "Front and Rear Wheel Speed Sensor On-Vehicle Inspection in Section 4E". *Are they in good condition?*	Substitute a known-good wheel hub assembly and recheck. If DTC detected, substitute a known-good ESP® hydraulic unit / control module and recheck.	Replace wheel speed sensor and recheck.

DTC C1034 / C1039: Yaw Rate / G Sensor Power Supply Failure / Internal Failure

S7RW0A4604023

Wiring Diagram

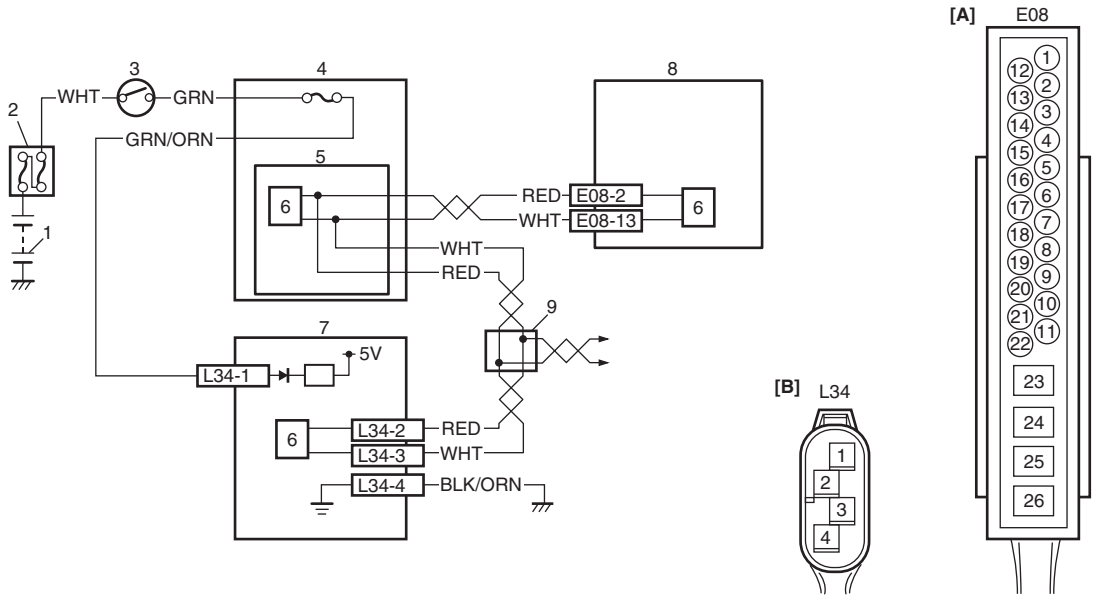

I6RW0H460009-01

[A]: ESP® control module connector (viewed from terminal side)	3. Ignition switch	7. Yaw rate / G sensor
[B]: Yaw Rate / G Sensor connector (viewed from harness side)	4. Junction block assembly	8. ESP® hydraulic unit control module assembly
1. Battery	5. BCM (included in junction block assembly)	9. CAN junction connector
2. Main fuse box	6. CAN driver	

DTC Detecting Condition and Trouble Area

DTC Detecting Condition	Trouble Area
DTC C1034: Power supply voltage of yaw rate / G sensor is too high or low. **DTC C1039:** • Yaw rate / G sensor internal failure is detected. • Abnormal signal from yaw rate / G sensor is detected.	• Yaw Rate / G Sensor power supply circuit • Yaw Rate / G Sensor • ESP® control module

DTC Troubleshooting

Step	Action	Yes	No
1	*Was “Electronic Stability Program Check” performed?*	Go to Step 2.	Go to “Electronic Stability Program Check”.
2	**DTC check for ESP®** 1) Connect scan tool to DLC with ignition switch turned OFF. 2) Turn ignition switch ON and check DTC for ESP®. *Are DTC U0073 and/or U0123 detected?*	Go to applicable DTC diag. flow.	Go to Step 3.
3	**Check fuse** *Is circuit fuse for yaw rate / G sensor in good condition?*	Go to Step 4.	Replace fuse and check for short circuit to ground.

Step	Action	Yes	No
4	**Check yaw rate / G sensor power supply circuit** 1) Turn ignition switch to OFF position. 2) Disconnect yaw rate / G sensor connector. 3) Check for proper connection to yaw rate / G sensor connector terminals at “L34-1” and “L34-4”. 4) If OK, then measure voltage between connector terminal “L34-1” and vehicle body ground with ignition switch turned ON. *Is it 10 – 14 V?*	Go to Step 5.	“GRN/ORN” wire circuit open or high resistance.
5	**Check yaw rate / G sensor ground circuit** 1) Measure resistance between connector terminal “L34-4” and vehicle body ground with ignition switch turned OFF. *Is resistance less than 2 Ω?*	Substitute a known-good yaw rate / G sensor and recheck. If DTC C1034 and/or C1039 is still detected, substitute a known-good ESP® hydraulic unit / control module assembly and recheck.	“BLK/ORN” wire circuit open or high resistance.

DTC C1037: Steering Angle Sensor Power Supply Failure

S7RW0A4604024

Wiring Diagram

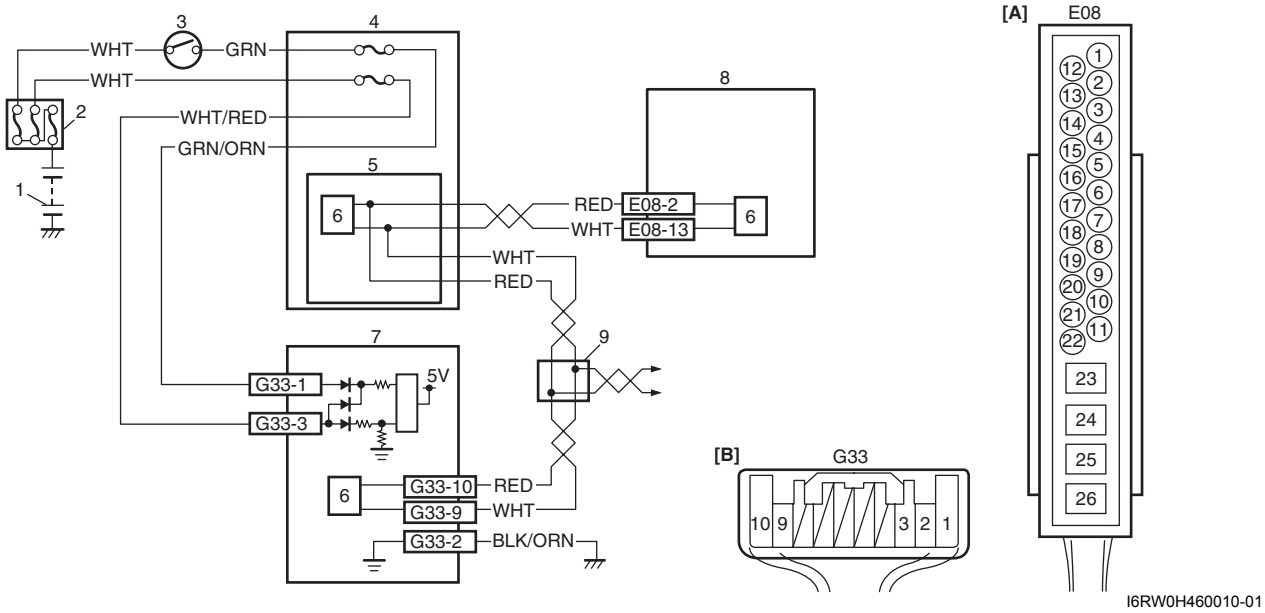

I6RW0H460010-01

[A]: ESP® control module connector (viewed from terminal side)	3. Ignition switch	7. Steering angle sensor
[B]: Steering angle sensor connector (viewed from harness side)	4. Junction block assembly	8. ESP® hydraulic unit / control module assembly
1. Battery	5. BCM (included in junction block assembly)	9. CAN junction connector
2. Main fuse box	6. CAN driver	

DTC Detecting Condition and Trouble Area

DTC Detecting Condition	Trouble Area
Power supply voltage to steering angle sensor is too low.	• Steering angle sensor power supply circuit • Steering angle sensor • ESP® control module

DTC Troubleshooting

Step	Action	Yes	No
1	*Was "Electronic Stability Program Check" performed?*	Go to Step 2.	Go to "Electronic Stability Program Check".
2	**DTC check for ESP®** 1) Connect scan tool to DLC with ignition switch turned OFF. 2) Turn ignition switch ON and check DTC for ESP®. *Are DTC U0073 and/or U0126 detected?*	Go to applicable DTC diag. flow.	Go to Step 3.
3	**Check fuse** 1) Check circuit fuses for steering angle sensor and its circuit. *Is it good condition?*	Go to Step 4.	Replace fuse and check for short circuit to ground.
4	**Check steering angle sensor power supply circuit** 1) Turn ignition switch to OFF position. 2) Disconnect steering angle sensor connector. 3) Check for proper connection to steering angle sensor connector terminals at "G33-2" and "G33-3". 4) If OK, then measure voltage between connector terminal "G33-3" and vehicle body ground. *Is it 10 – 14 V?*	Go to Step 4.	"WHT/RED" wire circuit open.
5	**Check steering angle sensor ground circuit** 1) Turn ignition switch to OFF position. 2) Measure resistance between connector terminal "G33-2" and vehicle body ground. *Is resistance less than 2 Ω?*	Substitute a known-good Steering angle sensor and recheck. If DTC C1037 is still detected, substitute a known-good ESP® hydraulic unit / control module assembly and recheck.	"BLK/ORN" wire circuit open or high resistance.

DTC C1038: Steering Angle Sensor Detect Rolling Counter

S7RW0A4604025

DTC Detecting Condition and Trouble Area

DTC Detecting Condition	Trouble Area
ESP® control module rolling counter failure is detected by steering angle sensor.	• CAN communication circuit • Steering angle sensor • ESP® control module

DTC Troubleshooting

Step	Action	Yes	No
1	*Was "Electronic Stability Program Check" performed?*	Go to Step 2.	Go to "Electronic Stability Program Check".
2	**Check DTC for ESP®** 1) Connect scan tool to DLC with ignition switch turned OFF. 2) Turn ignition switch ON and check DTC. *Is there any DTC(s) other than C1038 and C1096?*	Go to applicable DTC diag. flow.	Substitute a known-good steering angle sensor and recheck. If DTC C1038 is still detected, substitute a known-good ESP® hydraulic unit control module assembly and recheck.

DTC C1040: ESP® Continuous Operation

S7RW0A4604026

DTC Detecting Condition and Trouble Area

DTC Detecting Condition	Trouble Area
• ESP® control is active for more than specified time. • ESP® control module requested pressure reduction or keeping all wheel speed sensor for more than specified time.	• ESP® control module

DTC Troubleshooting

Step	Action	Yes	No
1	*Was "Electronic Stability Program Check" performed*	Go to Step 2.	Go to "Electronic Stability Program Check".
2	**Check DTC for ESP®** 1) Connect scan tool to DLC with ignition switch turned OFF. 2) Turn ignition switch ON and check DTC for ESP®. *Is there any DTC(s) other than C1040?*	Go to applicable DTC diag. flow.	Substitute a known-good ESP® hydraulic unit / control module assembly and recheck.

DTC C1041 / C1042 / C1043 / C1044 / C1045 / C1046 / C1051 / C1052 / C1053 / C1054 / C1055 / C1056: Inlet / Outlet / Cut / Suction Solenoid

S7RW0A4604027

DTC C1041 / C1045 / C1051 / C1055: Right-Front / Left-Front / Right-Rear / Left-Rear Inlet Solenoid
DTC C1042 / C1046 / C1052 / C1056: Right-Front / Left-Front / Right-Rear / Left-Rear Outlet Solenoid
DTC C1043 / C1044: Cut Solenoid No. 1 / No. 2
DTC C1053 / C1054: Suction Solenoid No. 1 / No. 2

Wiring Diagram

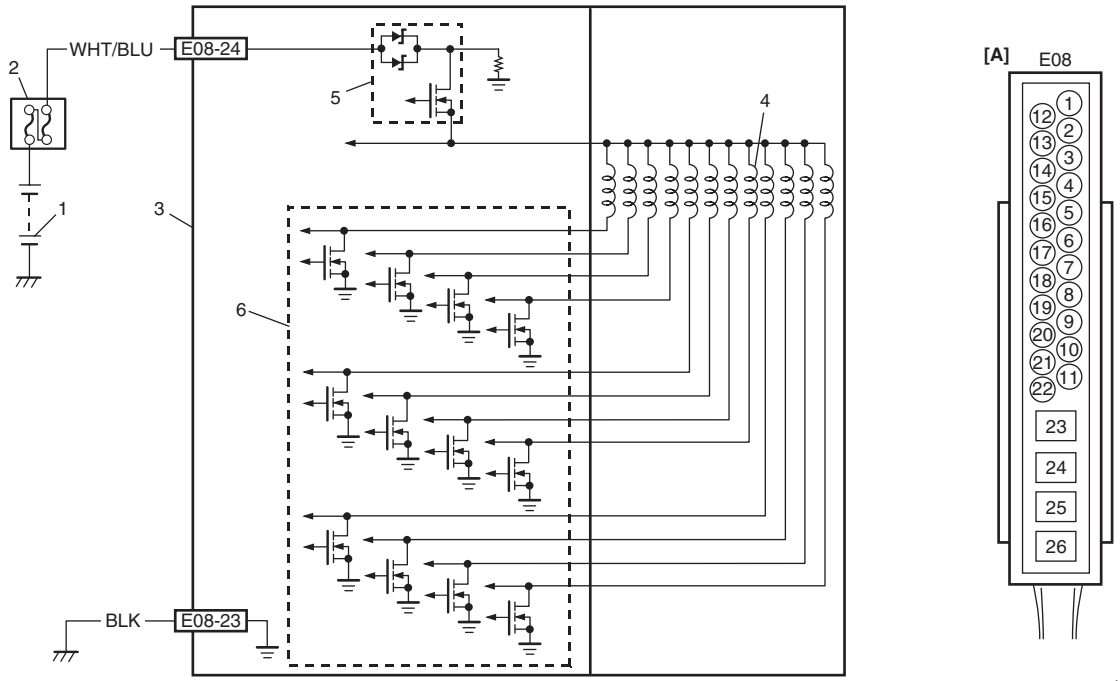

I6RW0H460011-01

[A]: ESP® control module connector (viewed from terminal side)	3. ESP® hydraulic unit / control module assembly	6. Solenoid valve driver (transistor)
1. Battery	4. Solenoid valve	
2. Main fuse box	5. Solenoid valve power supply driver	

DTC Detecting Condition and Trouble Area

DTC Detecting Condition	Trouble Area
• Solenoid valve circuit is opened, shorted to power, ground and/or each valve in ESP® hydraulic unit / control module assembly. • Mismatching solenoid output and solenoid monitor is detected.	• ESP® control module

DTC Troubleshooting

Step	Action	Yes	No
1	*Was "Electronic Stability Program Check" performed?*	Go to Step 2.	Go to "Electronic Stability Program Check".
2	**ESP® hydraulic unit / control module power source circuit check** 1) Turn ignition switch to OFF position. 2) Disconnect ESP® control module connector. 3) Check for proper connection to ESP® control module connector at terminal "E08-24" and "E08-23". 4) If OK, then measure voltage between terminal "E08-24" of module connector and "E08-23". *Is it 10 – 14 V?*	Substitute a known-good ESP® hydraulic unit / control module assembly and recheck.	"WHT/BLU" or "BLK" circuit open or high resistance.

DTC C1057: Power Supply Voltage Too High / Too Low

S7RW0A4604048

Wiring Diagram

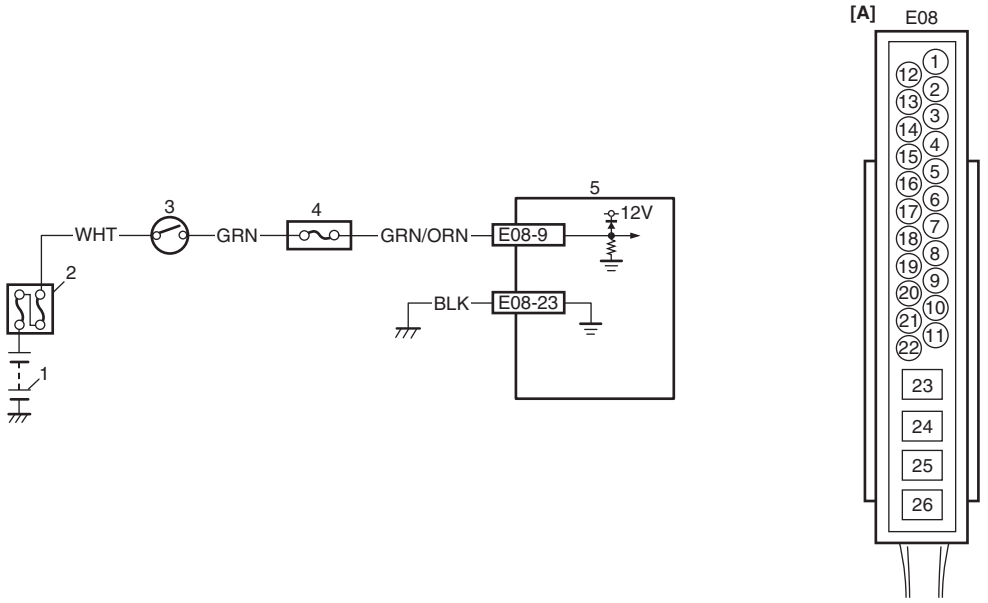

I6RW0H460012-01

[A]: ESP® control module connector (viewed from terminal side)	2. Main fuse box	4. Junction block assembly
1. Battery	3. Ignition switch	5. ESP® hydraulic unit / control module assembly

DTC Detecting Condition and Trouble Area

DTC Detecting Condition	Trouble Area
ESP® control module power supply voltage is too high or too low.	• ESP® control module power supply circuit • ESP® control module

DTC Troubleshooting

Step	Action	Yes	No
1	*Was “Electronic Stability Program Check” performed?*	Go to Step 2.	Go to “Electronic Stability Program Check”.
2	**Check ESP® hydraulic unit / control module assembly power and ground circuit** 1) Check that ESP® hydraulic unit / control module assembly power supply circuit and ground circuit is in good condition referring to “ESP® Hydraulic Unit / Control Module Assembly Power and Ground Circuit Check”. *Are check results OK?*	Go to Step 3.	Repair ESP® hydraulic unit / control module assembly power or ground circuit.
3	**ESP® hydraulic unit / control module power source voltage check** 1) Measure battery voltage with engine running at 3000 rpm. *Is voltage 15 V or less?*	Substitute a known-good ESP® hydraulic unit / control module assembly and recheck.	Check charging system referring to “Generator Test (Overcharged Battery Check) in Section 1J”.

DTC C1061: Pump Motor Circuit

S7RW0A4604029

Wiring Diagram

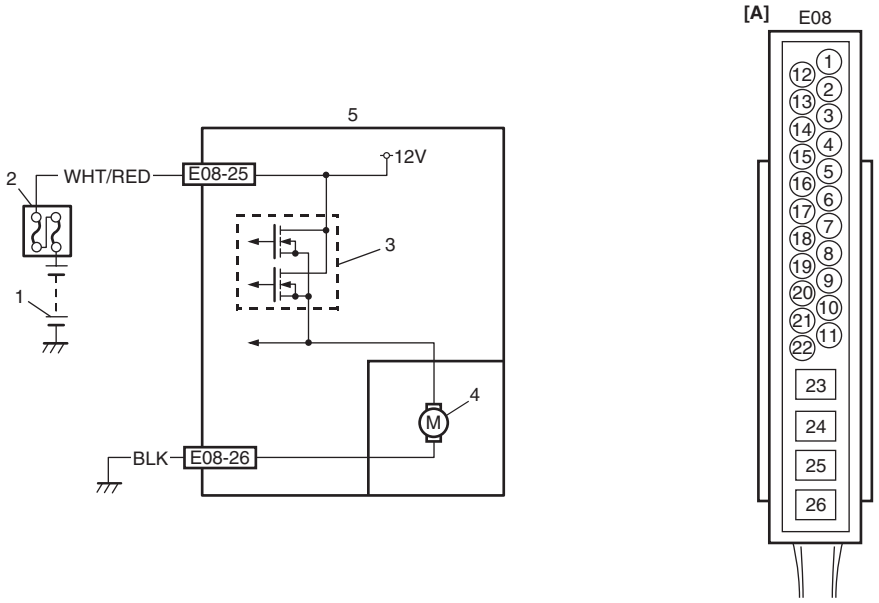

I6RW0H460013-01

[A]: ESP® control module connector (viewed from terminal side)	2. Main fuse box	4. Pump motor
1. Battery	3. Pump motor driver (transistor)	5. ESP® hydraulic unit / control module assembly

DTC Detecting Condition and Trouble Area

DTC Detecting Condition	Trouble Area
• Defective pump motor and/or motor power supply voltage is too low. • Pump motor circuit in ESP® control module is opened, shorted to power or ground circuit.	• Pump Motor and/or Motor Driver power supply circuit • ESP® control module

DTC Troubleshooting

Step	Action	Yes	No
1	*Was “Electronic Stability Program Check” performed?*	Go to Step 2.	Go to “Electronic Stability Program Check”.
2	**Check ESP® hydraulic unit / control module assembly power and ground circuit** 1) Check that ESP® hydraulic unit / control module assembly power supply circuit and ground circuit is in good condition referring to “ESP® Hydraulic Unit / Control Module Assembly Power and Ground Circuit Check”. *Are check results OK?*	Substitute a known-good ESP® hydraulic unit / control module assembly and recheck.	Repair ESP® hydraulic unit / control module assembly power or ground circuit.

DTC C1063: Solenoid Valve Power Supply Driver Circuit

S7RW0A4604030

Wiring Diagram

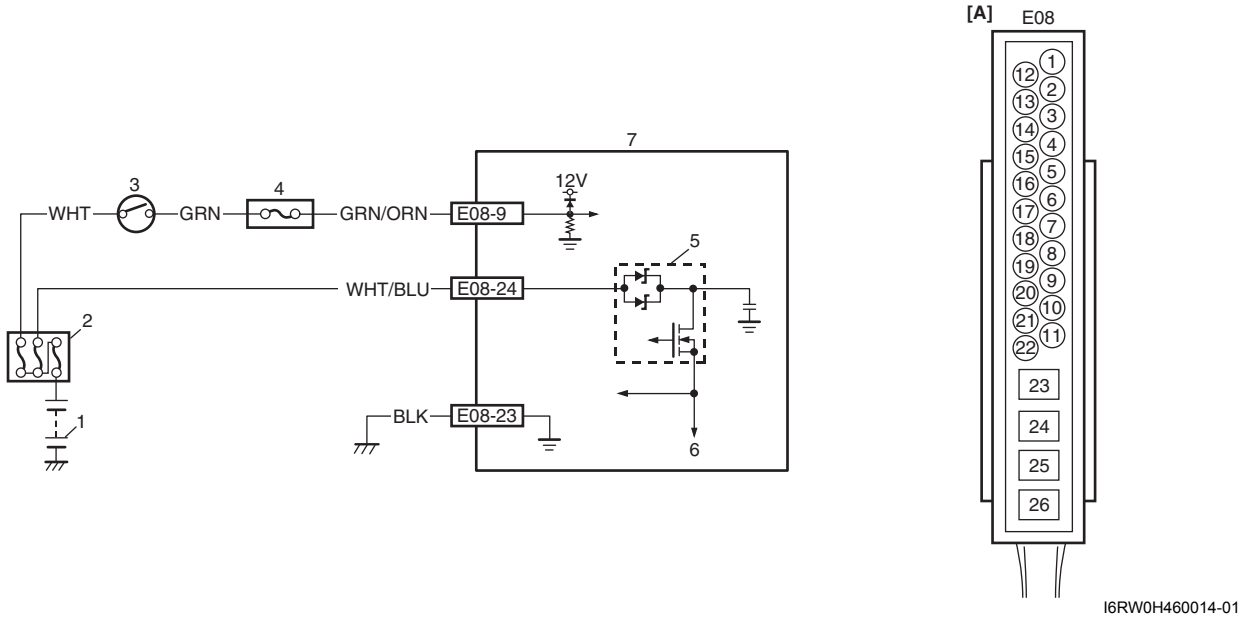

I6RW0H460014-01

[A]: ESP® control module connector (viewed from terminal side)	4. Junction block assembly
1. Battery	5. Solenoid valve power supply driver
2. Main fuse box	6. To solenoid valve
3. Ignition switch	7. ESP® hydraulic unit control module assembly

DTC Detecting Condition and Trouble Area

DTC Detecting Condition	Trouble Area
• Solenoid valve power supply driver circuit is opened, shorted to power and ground circuit in ESP® control module. • Solenoid valve power supply voltage is too low. • Solenoid valve power supply driver is stuck to ON or OFF position. • Output circuit from control unit is opened or shorted in ESP® control module. • Mismatching solenoid output and solenoid monitor is detected.	• Solenoid valve power supply circuit • ESP® control module

DTC Troubleshooting

Step	Action	Yes	No
1	*Was “Electronic Stability Program Check” performed?*	Go to Step 2.	Go to “Electronic Stability Program Check”.
2	**Check ESP® hydraulic unit / control module assembly power and ground circuit** 1) Check that ESP® hydraulic unit / control module assembly power supply circuit and ground circuit is in good condition referring to “ESP® Hydraulic Unit / Control Module Assembly Power and Ground Circuit Check”. *Are check results OK?*	Substitute a known-good ESP® hydraulic unit / control module assembly and recheck.	Repair ESP® hydraulic unit / control module assembly power or ground circuit.

DTC C1071: Control Module Internal Defect

S7RW0A4604049

DTC Detecting Condition and Trouble Area

DTC Detecting Condition	Trouble Area
ESP® control module internal defect is detected.	• ESP® control module

DTC Troubleshooting

Step	Action	Yes	No
1	*Was "Electronic Stability Program Check" performed?*	Go to Step 2.	Go to "Electronic Stability Program Check".
2	**Check ESP® hydraulic unit / control module assembly power and ground circuit** 1) Check that ESP® hydraulic unit / control module assembly power supply circuit and ground circuit is in good condition referring to "ESP® Hydraulic Unit / Control Module Assembly Power and Ground Circuit Check". *Are check results OK?*	Substitute a known-good ESP® hydraulic unit / control module assembly and recheck.	Repair ESP® hydraulic unit / control module assembly power or ground circuit.

DTC C1075: Steering Angle Sensor Calibration

S7RW0A4604032

DTC Detecting Condition and Trouble Area

DTC Detecting Condition	Trouble Area
C1075: Missing steering angle sensor calibration point data is detected.	• Steering angle sensor • Steering angle sensor calibration is incompleted • ESP® control module

DTC Troubleshooting

Step	Action	Yes	No
1	*Was "Electronic Stability Program Check" performed?*	Go to Step 2.	Go to "Electronic Stability Program Check".
2	**DTC check for ESP®** 1) Connect scan tool to DLC with ignition switch turned OFF. 2) Turn ignition switch ON and check DTC for ESP®. *Is there any DTC(s) other than C1075?*	Go to applicable DTC diag. flow.	Go to Step 3.
3	**Check sensor calibration** 1) Calibrate steering angle sensor referring to "Sensor Calibration". 2) Clear all DTC(s) and check DTC for ESP®. *Is DTC C1075 still detected?*	Substitute a known-good steering angle sensor and recheck. If DTC C1075 is still detected, substitute a known-good ESP® hydraulic unit / control module assembly and recheck.	Calibration was incompleted.

DTC C1091: CAN Invalid Data from ECM

S7RW0A4604033

DTC Detecting Condition and Trouble Area

DTC Detecting Condition	Trouble Area
ECM sent invalid signal to ESP® control module.	• Engine control system • ECM • ESP® control module

DTC Troubleshooting

Step	Action	Yes	No
1	*Was "Electronic Stability Program Check" performed?*	Go to Step 2.	Go to "Electronic Stability Program Check".
2	**DTC check other control module than ESP®** 1) Connect SUZUKI scan tool to DLC with ignition switch turned OFF. 2) Turn ignition switch ON and check DTC for ECM. *Is there any DTC(s)?*	Go to applicable DTC diag. flow.	Substitute a known-good ESP® hydraulic unit / control module assembly and recheck.

DTC C1096: Yaw Rate / G Sensor Message Counter Error

S7RW0A4604034

DTC Detecting Condition and Trouble Area

DTC Detecting Condition	Trouble Area
Yaw rate / G sensor message counter error is detected by ESP® control module.	• CAN communication circuit • Yaw rate / G sensor • ESP® control module

DTC Troubleshooting

Step	Action	Yes	No
1	*Was "Electronic Stability Program Check" performed?*	Go to Step 2.	Go to "Electronic Stability Program Check".
2	**Check DTC** 1) Connect scan tool to DLC with ignition switch turned OFF. 2) Turn ignition switch ON and check DTC. *Is there any DTC(s) other than C1038 and C1096?*	Go to applicable DTC diag. flow.	Substitute a known-good yaw rate / G sensor and recheck. If DTC C1096 is still detected, substitute a known-good ESP® hydraulic unit control module assembly and recheck.

DTC U0073: Control Module Communication Bus Off

S7RW0A4604035

Refer to “Troubleshooting for Communication Error with Scan Tool Using CAN in Section 1A”.

DTC U0100: Lost Communication with ECM / PCM

S7RW0A4604036

Refer to “Troubleshooting for Communication Error with Scan Tool Using CAN in Section 1A”.

DTC U0101: Lost Communication with TCM

S7RW0A4604037

Refer to “Troubleshooting for Communication Error with Scan Tool Using CAN in Section 1A”.

DTC U0114: Lost Communication with Four-Wheel Drive Clutch Control Module

S7RW0A4604038

Refer to “Troubleshooting for Communication Error with Scan Tool Using CAN in Section 1A”.

DTC U0123: Lost Communication with Yaw Rate Sensor Module

S7RW0A4604039

Refer to “Troubleshooting for Communication Error with Scan Tool Using CAN in Section 1A”.

DTC U0126: Lost Communication with Steering Angle Sensor

S7RW0A4604040

Refer to “Troubleshooting for Communication Error with Scan Tool Using CAN in Section 1A”.

ESP® Hydraulic Unit / Control Module Assembly Power and Ground Circuit Check

S7RW0A4604050

Wiring Diagram

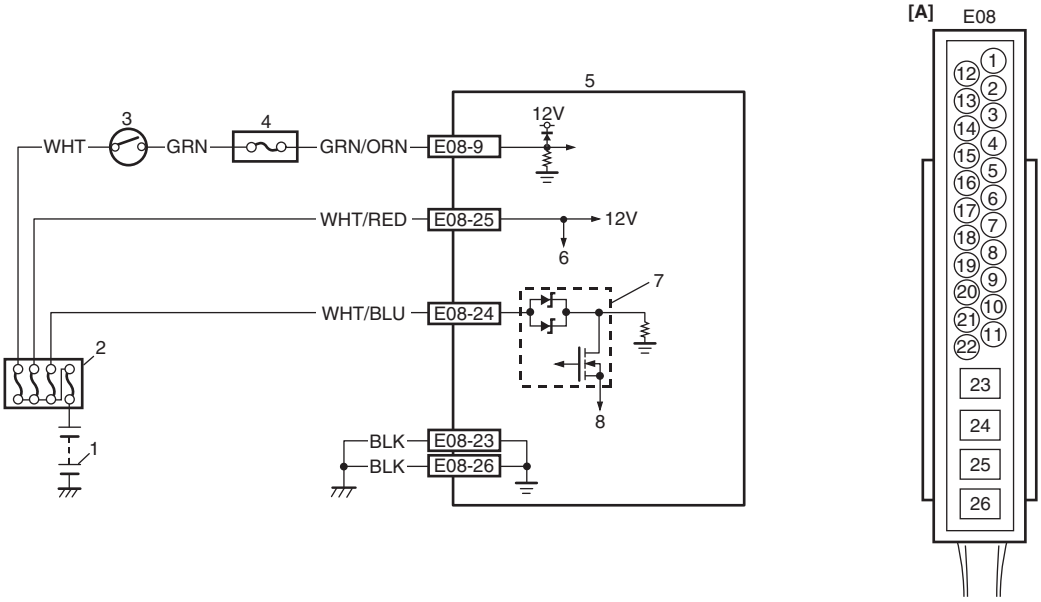

I6RW0H460015-01

[A]: ESP® control module connector (viewed from terminal side)	5. ESP® hydraulic unit / control module assembly
1. Battery	6. To pump motor driver
2. Main fuse box	7. Solenoid valve power supply driver
3. Ignition switch	8. To solenoid valve
4. Junction block assembly	

Circuit Description

When the ignition switch is turned ON, power supply is supplied to ESP® control module. And, power supply is supplied to pump motor and solenoid valve in other line by the switching function in ESP® control module.

Troubleshooting

Step	Action	Yes	No
1	**Check fuse** *Are main fuses and circuit fuses for ESP® in good condition?*	Go to Step 2.	Replace fuse and check for short circuit to ground.
2	**Check ESP® control module power supply circuit** 1) Turn ignition switch to OFF position. 2) Disconnect ESP® control module connector. 3) Check for proper connection to ESP® control module connector at terminals “E08-9”, “E08-23”,”E08-24”h, “E08-25” and “E08-26”. 4) If OK, then turn ignition switch to ON position and measure voltage between terminal “E08-9” and vehicle body ground. *Is it 10 – 14 V?*	Go to Step 3.	“GRN/ORN” circuit open.
3	**Pump motor and solenoid valve power supply circuit** 1) Turn ignition switch to OFF position. 2) Measure voltage between each terminal of “E08-24”, “E08-25” and vehicle body ground. *Are they 10 – 14 V?*	Go to Step 4.	“WHT/BLU” and/or “WHT/RED” circuit open.
4	**Check ESP® hydraulic unit / control module assembly ground circuit** 1) Measure resistance between each terminal of “E08-23”, “E08-26” and vehicle body ground. *Is resistance less than 2 Ω?*	ESP® hydraulic unit / control module assembly power and ground circuits are in good condition.	“BLK” circuit open or high resistance.

Repair Instructions

ESP® Hydraulic Unit Operation Check

S7RW0A4606001

1) Check that basic brake system other than ESP® is in good condition.
2) Check that battery voltage is 11 V or higher.
3) Lift up vehicle.
4) Set transmission to neutral and release parking brake.
5) Turn each wheel gradually by hand to check if braked ragging occurs. If it does, correct.
6) Connect SUZUKI scan tool to data link connector (DLC) (1) with ignition switch OFF.

   Special tool
   (A): SUZUKI scan tool

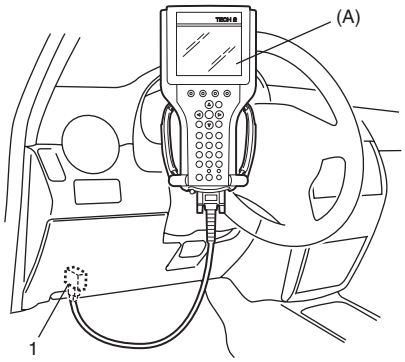

I5RW0A320008-01

7) Turn ignition switch to ON position and select menu press / depress in “HYDRAULIC CONTROL TEST” under “miscellaneous test” (“MISC. TEST”) mode of SUZUKI scan tool.
   Refer to SUZUKI scan tool operator’s manual for further details.
8) Perform the following checks with help of another person.
   - Depressurization check
     Step on brake pedal (1) and then select testing wheel by SUZUKI scan tool and the wheel (2) should be turned by another person’s hand. At this time, check whether the wheel rotates freely due to brake depressurization.
   - Pressurization check
     Step off brake pedal (1) and then select testing wheel by SUZUKI scan tool and the wheel (2) should be turned by another person’s hand. At this time, check whether the wheel locks due to brake pressurization.

NOTE

Pressurization / Depressurization by SUZUKI scan tool is available for 0.5 second.

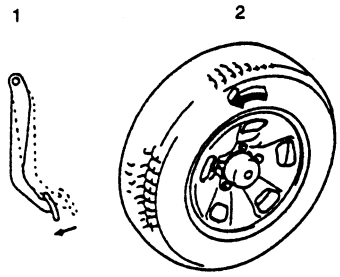

I4RH01450021-01

9) Check for all 4-wheels condition respectively. If a faulty condition is found, replace hydraulic unit / control module assembly.
10) After completing the check, turn ignition switch to OFF position and disconnect SUZUKI scan tool from DLC.

Sensor Calibration

S7RW0A4606002

⚠ CAUTION

If any DTC other than C1075 is detected, sensor calibration can not be completed. Repair the detected DTC first.

NOTE

Steering angle sensor calibration is needed when battery, “DOME” fuse or the steering angle sensor is removed.
This sensor calibration can be done with/ without SUZUKI scan tool.

Using SUZUKI Scan Tool

1) Set steering wheel in straight-ahead position.
2) Connect SUZUKI scan tool to data link connector (DLC) (1) with ignition switch OFF.

   Special tool
   (A): SUZUKI scan tool

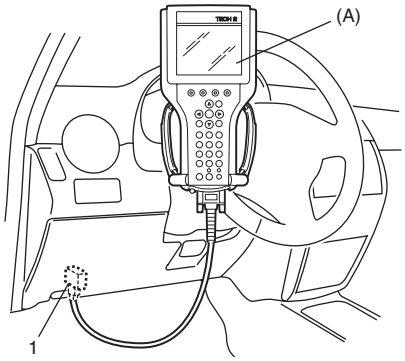

I5RW0A320008-01

3) Turn ignition switch to ON position and confirm that only any of DTC(s) C1075 is detected. If any other DTC are detected, repair the detected DTC.
4) Park and level the vehicle with parking brake, stop engine with ignition switch ON, set steering in straight and without stepping on the brake pedal.

NOTE

Hold the above condition in Step 4) to calibrate sensor correctly until sensor calibration is completed.

5) Select menu “SENSOR CALIBRATION” under “MISC. TEST” mode of SUZUKI scan tool and calibrate sensor. Refer to scan tool operator's manual for further derails.
6) After completing the calibration, turn ignition switch to OFF position and disconnect SUZUKI scan tool from DLC.

Not Using SUZUKI Scan Tool

1) Set steering wheel in straight-ahead position.
2) Confirm that battery terminals and/or related fuses securely installed (if removed).
3) Start engine.

NOTE

When power is not supplied to the steering angle sensor by removing battery or fuse, DTC C1075 is detected and SLIP indicator light (1) flashes.
If DTC other than C1075 is detected, SLIP indicator light flushes and other indicator illuminate. In that case, repair the detected DTC first.

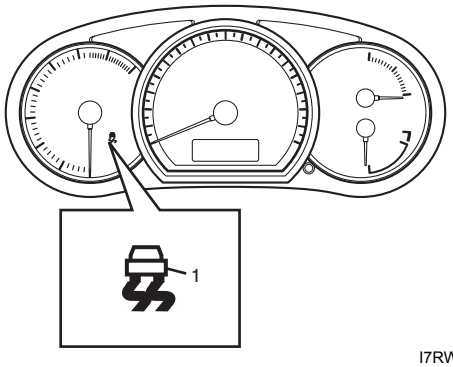

I7RW0A460006-01

4) Drive straight for approximately 35 km/h (21.8 mph) or more and 10 seconds or more.

ESP® Hydraulic Unit / Control Module Assembly On-Vehicle Inspection

S7RW0A4606023

⚠ CAUTION

Never disassemble ESP® hydraulic unit / control module assembly, loosen blind plug or remove motor. Performing any of these prohibited services will affect original performance of ESP® hydraulic unit / control module assembly.

Check hydraulic unit for fluid leakage.
If any, repair or replace.

ESP® Hydraulic Unit / Control Module Assembly Removal and Installation

S7RW0A4606024

⚠ CAUTION

- **Never disassemble ESP® hydraulic unit / control module assembly, loosen blind plug or remove motor. Performing any of these prohibited services will affect original performance of ESP® hydraulic unit / control module assembly.**
- **Do not allow brake fluid to get on painted surfaces. Painted surfaces will be damaged by brake fluid, flush it with water immediately if any fluid is spilled.**
- **Regarding ESP® hydraulic unit / control module assembly removal and installation, confirm specified torque and use hand tool to avoid damage.**
- **Use care not to allow dust to enter hydraulic unit.**
- **Do not place hydraulic unit on its side or upside down. Handling it in inappropriate way will affect its original performance.**

Removal

1) Disconnect negative (–) cable from battery.
2) Disconnect ESP® hydraulic unit / control module assembly connector (1) by pull up the lock (2).

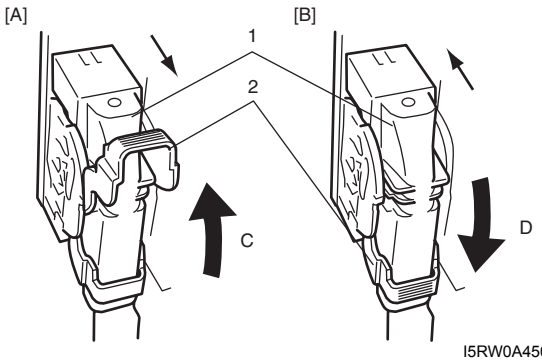

I5RW0A450001-01

[A]: Disconnect	C: Pull up to disconnect
[B]: Connect	D: Pull down to connect

3) Using special tool, loosen flare nuts (1) and disconnect brake pipes (2) from ESP® hydraulic unit / control module assembly (3).

Special tool
(A): 09950–78220

NOTE

Put bleeder plug cap or the like onto pipe to prevent fluid from spilling. Do not allow brake fluid to get on painted surfaces.

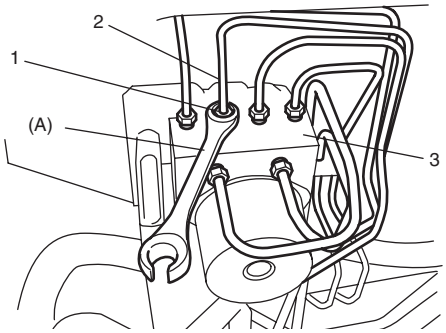

I5RW0A450020-01

4) Remove ESP® hydraulic unit / control module with bracket from vehicle by removing three bracket bolts.
5) Remove bolt and pull out ESP® hydraulic unit / control module assembly (1) from bracket (3) using flat end rod or the like (2).

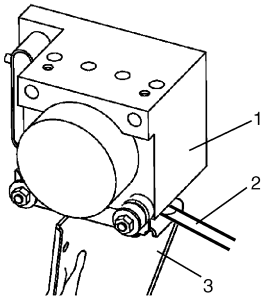

I5RW0A450021-01

Installation
Install ESP® hydraulic unit / control module assembly (3) by reversing removal procedure, noting the following instructions.

1) Install hydraulic unit / control module assembly bracket bolt as follows.
   a) Tighten bracket bolt (1) and (2) by hand.
   b) Then tighten bracket bolt to specified torque. Tightening order (1) → (2)

Tightening torque
Hydraulic unit / control module assembly bracket bolt (a): 26 N·m (2.6 kgf-m, 19.0 lb-ft)
Hydraulic unit / control module assembly bolt (b): 9 N·m (0.9 kgf-m, 6.5 lb-ft)
Brake pipe flare nut for M10 (c): 16 N·m (1.6 kgf-m, 11.5 lb-ft)
Brake pipe flare nut for M12 (d): 19 N·m (1.9 kgf-m, 14.0 lb-ft)

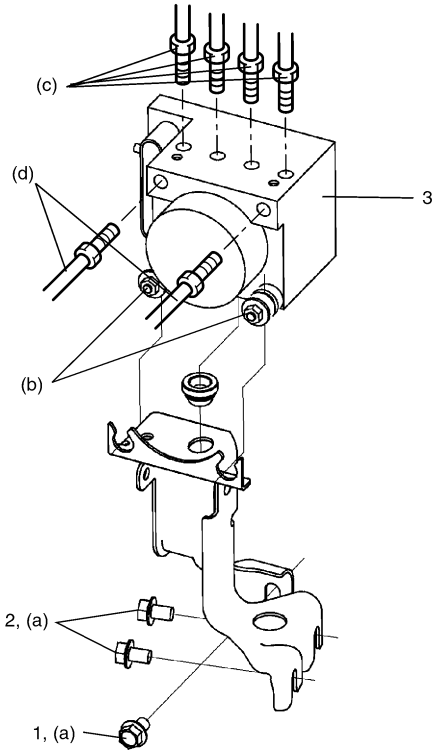

I6RW0H460016-01

2) Bleed air from brake system referring to “Air Bleeding of Brake System in Section 4A”.
3) Check each installed part for fluid leakage.
4) Connect SUZUKI Scan Tool.
5) Turn ignition switch to ON position. And SLIP indicator light flush. (Other than replace with new one) If other than SLIP indicator light lights, check DTC and repair it.
6) Turn ignition switch to ON position. And ESP® warning light, SLIP indicator light, ESP® OFF light, Brake warning light lights and ABS warning light flush. (Replace new one)
7) Check DTC.

NOTE

If any DTC other than C1075 is detected, sensor calibration can not be compleated. Repair the detected it first.

8) Perform “Sensor Calibration”.
9) Perform “ESP® Hydraulic Unit Operation Check”.
10) Turn ignition switch to OFF position once and then ON position. In this state, make sure that indicator light and warning light turns off.
11) Check DTC(s) are not stored in hydraulic unit / control module.

Front Wheel Speed Sensor On-Vehicle Inspection

S7RW0A4606006

Refer to “Front and Rear Wheel Speed Sensor On-Vehicle Inspection in Section 4E”.

Front Wheel Speed Sensor Removal and Installation

S7RW0A4606007

Refer to “Front Wheel Speed Sensor Removal and Installation in Section 4E”.

Front Wheel Speed Sensor Inspection

S7RW0A4606008

Refer to “Front and Rear Wheel Speed Sensor Inspection in Section 4E”.

Rear Wheel Speed Sensor On-Vehicle Inspection

S7RW0A4606025

Refer to “Front and Rear Wheel Speed Sensor On-Vehicle Inspection in Section 4E”.

Rear Wheel Speed Sensor Removal and Installation

S7RW0A4606009

Refer to “Rear Wheel Speed Sensor Removal and Installation (4WD Model) in Section 4E”.

Rear Wheel Speed Sensor Inspection

S7RW0A4606026

Refer to “Front and Rear Wheel Speed Sensor Inspection in Section 4E”.

Front Wheel Speed Sensor Encoder On-Vehicle Inspection

S7RW0A4606010

Refer to “Front and Rear Wheel Speed Sensor On-Vehicle Inspection in Section 4E”.

Front Wheel Speed Sensor Encoder Removal and Installation

S7RW0A4606011

Refer to “Front Wheel Speed Sensor Encoder Removal and Installation in Section 4E”.

Rear Wheel Speed Sensor Encoder On-Vehicle Inspection

S7RW0A4606012

Refer to “Rear Wheel Speed Sensor Encoder On-Vehicle Inspection in Section 4E”.

Rear Wheel Speed Sensor Encoder Removal and Installation

S7RW0A4606013

Refer to “Rear Wheel Speed Sensor Encoder Removal and Installation in Section 4E”.

Master Cylinder Pressure Sensor On-Vehicle Inspection

S7RW0A4606014

1) Check that basic brake system other than ESP® refer to “Brakes Diagnosis Note in Section 4A”.
2) Connect SUZUKI scan tool to data link connector (DLC) (1) with ignition switch OFF.

   Special tool
   (A): SUZUKI scan tool

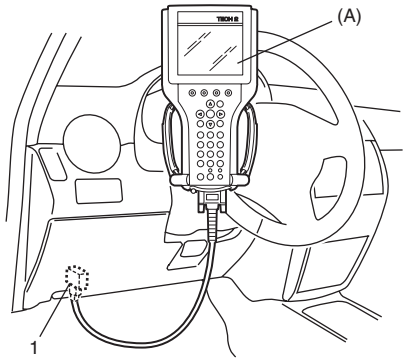

I5RW0A320008-01

3) Turn ignition switch to ON position and select menu “DATA LIST” mode of SUZUKI scan tool. Refer to scan tool operator's manual for further derails.
4) When brake pedal is released, check “Master Cyl Press” under “DATA LIST” of SUZUKI scan tool. If pressure is out of specification, replace ESP® hydraulic unit / control module assembly.

   <u>Master cylinder pressure specification</u>
   Brake pedal released: 0 ± 0.8 MPa (0 ± 8 kg/cm^2, 0 ± 113 psi)

5) Hoist vehicle and remove right-side front wheel.
6) Connect special tool with rubber hose (1) to Front brake caliper bleeder plug (2).

   Special tool
   (A): 09956–02311

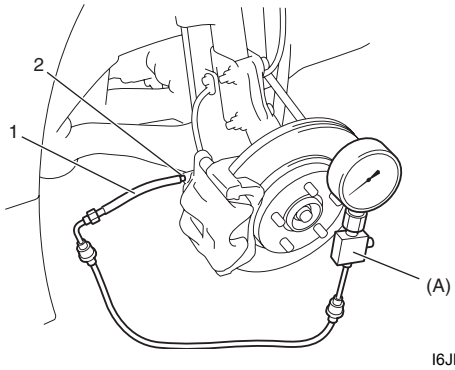

I6JB01460025-01

7) When bleeder plug loosen and depress brake pedal to make special tool gauge reading 10 MPa (100 kg/cm^2, 1422 psi), check “Master Cyl Press” under “DATA LIST” of SUZUKI scan tool.
If pressure displayed on SUZUKI scan tool is out of specification, replace ESP® hydraulic unit / control module assembly.

Master cylinder pressure specification
Brake pedal depressed 10 MPa (100 kg/cm^2, 1422 psi): 10 ± 1.2 MPa (100 ± 12 kg/cm^2, 1422 ± 170 psi)

8) After completing the check, turn ignition switch to OFF position and disconnect SUZUKI scan tool from DLC.
9) Tighten bleeder plug and bleed air from brake system, referring to “Air Bleeding of Brake System in Section 4A”.

Yaw Rate / G Sensor On-Vehicle Inspection

S7RW0A4606015

Lateral G Inspection

1) Park and level the vehicle with parking brake and fix wheels with chokes.
2) Check yaw rate / G sensor installation condition.
3) Connect SUZUKI scan tool to data link connector (DLC) (1) with ignition switch OFF.

Special tool
(A): SUZUKI scan tool

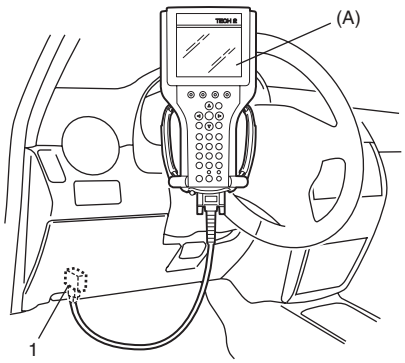

I5RW0A320008-01

4) Turn ignition switch to ON position and select menu “DATA LIST” mode of SUZUKI scan tool. Refer to scan tool operator's manual for further derails.
5) Check “G Sensor (lateral)” under “DATA LIST” of SUZUKI scan tool in the following vehicle conditions.
   - Level condition
   - Right-up condition
   - Left-up condition

   If Lateral G condition is out of specification, replace yaw rate / G sensor.

Lateral G specification

Vehicle condition	G Sensor (lateral)
Level condition	**0 ± 0.1 G**
Right-up condition	**0.1 ± 0.1 G**
Left-up condition	**–0.1 ± 0.1 G**

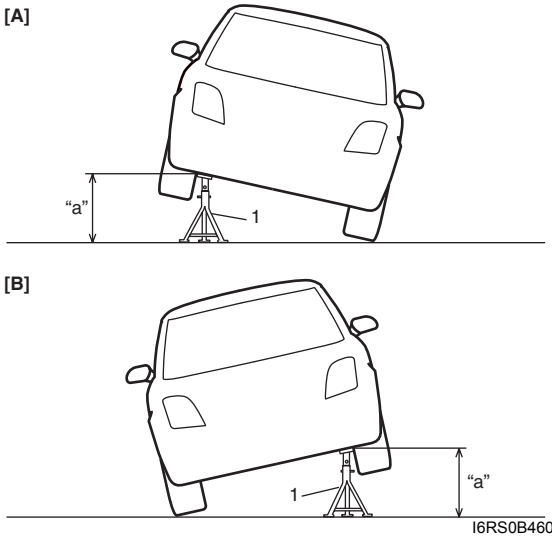

I6RS0B460039-02

[A]: Right-up condition	“a”: Approx 450 mm (17.7 in.)
[B]: Left-up condition	1. Safety stand

Yaw Rate Inspection

1) Check yaw rate / G sensor installation condition.
2) Connect SUZUKI scan tool to data link connector (DLC) (1) with ignition switch OFF.

Special tool
(A): SUZUKI scan tool

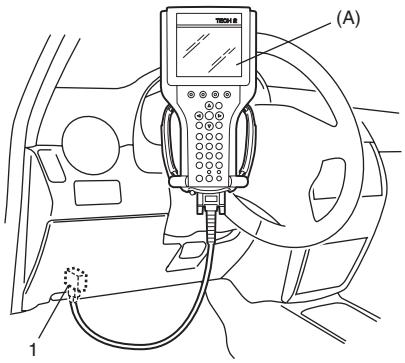

I5RW0A320008-01

3) Turn ignition switch to ON position and select menu “DATA LIST” mode of SUZUKI scan tool. Refer to scan tool operator's manual for further derails.
4) Check “Yaw rate sensor” under “DATA LIST” of SUZUKI scan tool in the following vehicle conditions.
   - Parking condition
   - Drive vehicle in right turning condition with steering wheel fully turned
   - Drive vehicle in left turning condition with steering wheel fully turned

   If yaw rate condition is out of specification, replace yaw rate / G sensor.

Yaw rate specification

Vehicle condition	Yaw rate
Parking	**0 ± 4 deg/s**
Right turning	**30 ± 4 deg/s**
Left turning	**–30 ± 4 deg/s**

NOTE

- **Drive the vehicle on level ground and at 10 km/h (6.2 mph).**
- **Minimum turning radius is 5.3 m (17.4 ft).**

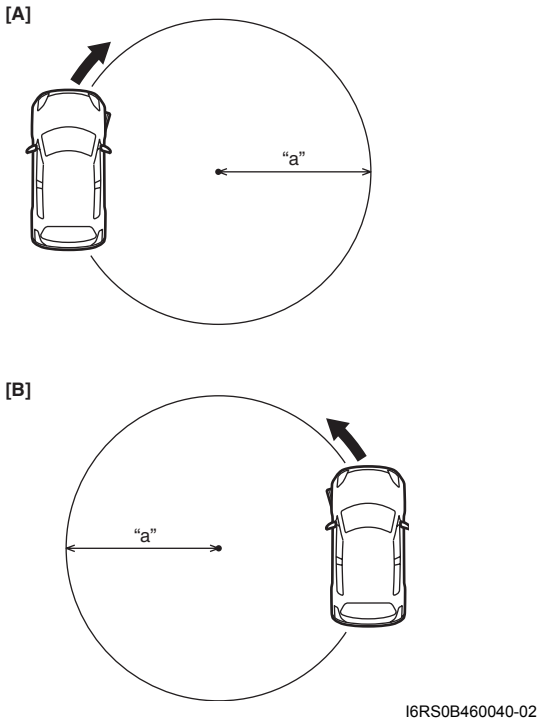

I6RS0B460040-02

[A]: Right turning	“a”: Approx 5.3 m (17.4 ft.)
[B]: Left turning	

Yaw Rate / G Sensor Removal and Installation

S7RW0A4606016

⚠ CAUTION

- **Regarding yaw rate / G sensor removal/ installation, confirm specified torque and never use impact wrench to avoid damage.**
- **When handling the yaw rate / G sensor, be careful not to drop it or apply an impact to it.**
  If an excessive impact was applied, never attempt disassembly or repair but replace it with a new one.

Removal

1) Disconnect negative (–) cable at battery.
2) Remove console box referring to “Console Box Components in Section 9H”.
3) Disconnect connector from yaw rate / G sensor.
4) Remove yaw rate / G sensor from sensor bracket.

Installation

1) Before installing yaw rate / G sensor (1), check installing condition as follows.
   - Deformations around sensor installation area (2) (in sensor bracket).
   - Foreign matters on mating surface between sensor and sensor bracket.
2) Install yaw rate / G sensor (1) to floor panel.

   Tightening torque
   Yaw rate / G sensor bolt (a): 6.5 N·m (0.65 kgf-m, 5.0 lb-ft)

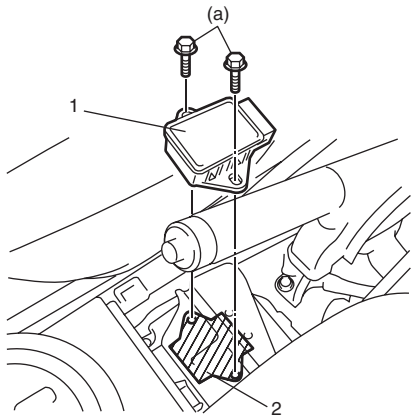

I7RW01460021-01

3) Connect connector to yaw rate / G sensor.
4) Install console box referring to “Console Box Components in Section 9H”.
5) Connect negative (–) cable to battery.

Yaw Rate / G Sensor Inspection

S7RW0A4606017

- Check sensor for dents, cracks or deformation.
- Check sensor connector (sensor side and harness side) and sensor connector lock mechanism for damage or crack.
- Check connector terminals for bend, corrosion or rust.

If it is found faulty, replace yaw rate / G sensor.

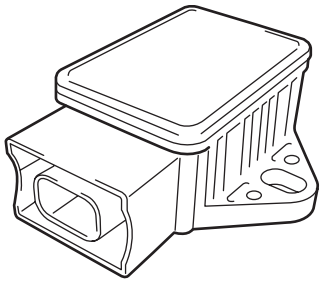

I7RW01460022-01

Steering Angle Sensor On-Vehicle Inspection

S7RW0A4606018

⚠ CAUTION

Before each inspection, confirm steering angle sensor calibration is completed.
If calibration is incompleted, calibrate sensor referring to "Sensor Calibration".

1) Connect SUZUKI scan tool to data link connector (DLC) (1) with ignition switch OFF.

   Special tool
   (A): SUZUKI scan tool

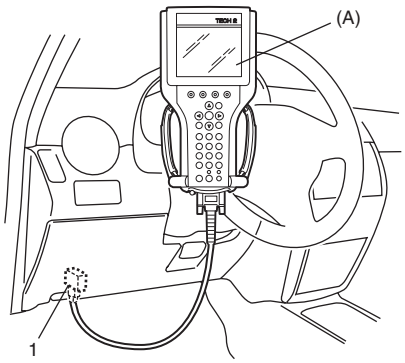

I5RW0A320008-01

2) Turn ignition switch to ON position and select menu "DATA LIST" mode of SUZUKI scan tool.
   Refer to scan tool operator's manual for further derails.
3) Check "Steering angle Sen" under "DATA LIST" of SUZUKI scan tool in the following steering wheel conditions.
   - Front wheels in straight-ahead position
   - Rotate steering wheel a round in clockwise (counter clockwise) from straight-ahead position

   If steering angle condition is out of specification, replace steering angle sensor.

   Steering angle Specification

Vehicle condition	Steering angle
Front wheels in straight-ahead position	**0 ± 3°**
Rotate steering wheel a round in clockwise	**360 ± 3°**
Rotate steering wheel a round in counterclockwise	**–360 ± 3°**

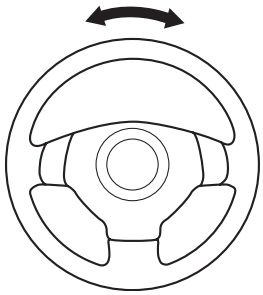

I6JB01460032-01

Steering Angle Sensor Removal and Installation

S7RW0A4606019

Removal

1) Remove steering wheel and contact coil cable assembly. Refer to “Steering Wheel Removal and Installation” and “Contact Coil Cable Assembly Removal and Installation”.
2) Remove steering angle sensor (2) from contact coil cable assembly (3) while opening fitting parts (1) of contact coil cable assembly.

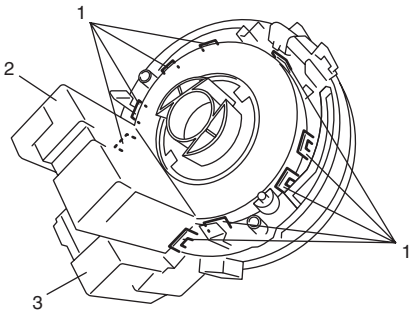

I6JB01620003-01

Installation

1) Install steering angle sensor (2) by fitting engagement parts (1) of contact coil cable assembly to claws of steering angle sensor as shown in figure.

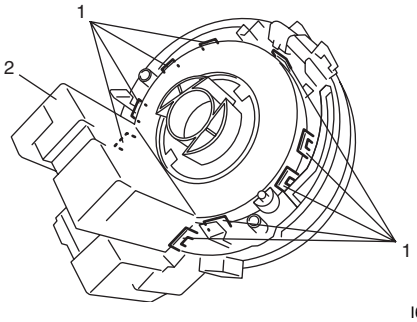

I6JB01620004-01

2) Install contact coil cable assembly and steering wheel. Refer to “Contact coil Cable Assembly Removal and Installation” and “Steering Wheel Removal and Installation”.

Steering Angle Sensor Inspection

S7RW0A4606020

- Check sensor for dents, cracks or deformation.
- Check sensor connector (sensor side and harness side) and sensor connector lock mechanism for damage or crack.
- Check connector terminals for bend, corrosion or rust.

If it is found faulty, replace steering angle sensor (1).

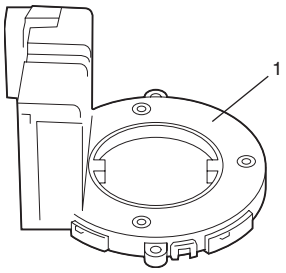

I6JB01460033-01

ESP® OFF Switch Removal and Installation

S7RW0A4606021

Removal

1) Disconnect negative (–) cable at battery.
2) Remove rear console box referring to “Console Box Components in Section 9H”.
3) Disconnect ESP® OFF switch coupler.
4) Remove ESP® OFF switch (1) from rear console box (2).

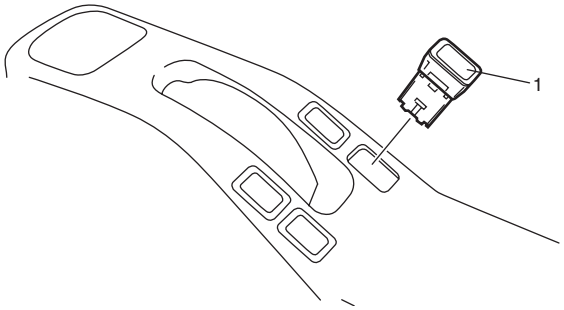

I6RS0B460042-02

Installation

Reverse removal procedure.

ESP® OFF Switch Inspection

S7RW0A4606022

Check for continuity between terminals at each switch position.
If check result is not as specified, replace ESP® OFF switch (1).

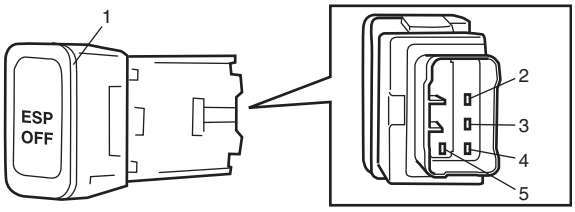

	2	3	4	5
[A]			○—⊘—○	
[B]	○—○		○—⊘—○	

I6RS0B460043-02

[A]: Free	[B]: Push

Specifications

Tightening Torque Specifications

S7RW0A4607001

Fastening part	Tightening torque			Note
	N·m	kgf-m	lb-ft	
Hydraulic unit / control module assembly bracket bolt	26	2.6	19.0	☞
Hydraulic unit / control module assembly bolt	9	0.9	6.5	☞
Brake pipe flare nut for M10	16	1.6	11.5	☞
Brake pipe flare nut for M12	19	1.9	14.0	☞
Yaw rate / G sensor bolt	6.5	0.65	5.0	☞

Reference:
For the tightening torque of fastener not specified in this section, refer to “Fasteners Information in Section 0A”.

Special Tools and Equipment

Special Tool

S7RW0A4608001

09950–78220 Flare nut wrench (10 mm) ☞ 	09956–02311 Brake pressure gauge ☞ 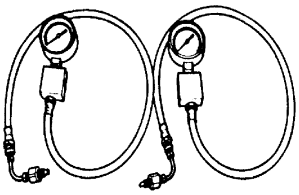
SUZUKI scan tool — This kit includes following items. 1. Tech 2, 2. PCMCIA card, 3. DLC cable, 4. SAE 16/19 adapter, 5. Cigarette cable, 6. DLC loop back adapter, 7. Battery power cable, 8. RS232 cable, 9. RS232 adapter, 10. RS232 loop back connector, 11. Storage case, 12.☞ / ☞ / ☞ / ☞ / ☞ / ☞ / ☞ 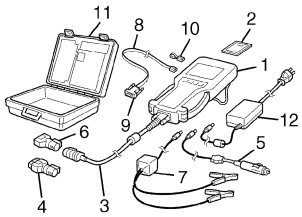	

Section 5

Transmission / Transaxle

CONTENTS

Precautions 5-1
Precautions 5-1
Precautions on Transmission / Transaxle 5-1

Automatic Transmission/Transaxle 5A-1
Precautions 5A-1
Precautions in Diagnosing Trouble 5A-1
Precautions for Disassembly and Reassembly 5A-1
General Description 5A-3
A/T Description 5A-3
Clutch / Brake / Planetary Gear Function of Automatic Transaxle 5A-7
Table of Component Operation 5A-8
Operation of Shift Solenoid Valves, Timing Solenoid Valve and TCC Solenoid Valve 5A-8
Automatic Gear Shift Table 5A-9
A/T Diagnosis General Description 5A-11
On-Board Diagnostic System Description 5A-11
CAN Communication System Description 5A-12
Schematic and Routing Diagram 5A-13
Transmission Control Module (TCM) Wiring Diagram 5A-13
A/T System Diagram 5A-15
Component Location 5A-16
Electronic Shift Control System Components Location 5A-16
Diagnostic Information and Procedures 5A-17
A/T System Check 5A-17
Visual Inspection 5A-19
Malfunction Indicator Lamp (MIL) Check 5A-20
Transmission Warning Light Check (Non-Euro-OBD model) 5A-20
DTC Table 5A-20
DTC Check 5A-22
DTC Clearance 5A-23
Fail-Safe Table 5A-23
Scan Tool Data 5A-25
A/T Basic Check 5A-28
Road Test 5A-28
Manual Road Test 5A-31
Engine Brake Test 5A-31
Stall Test 5A-32
Time Lag Test 5A-33
Line Pressure Test 5A-34
“P” Range Test 5A-35
A/T Symptom Diagnosis 5A-35
Transmission Warning Light Circuit Check – Light Remains “ON” at Ignition Switch ON (Non-Euro-OBD Model) 5A-43
Transmission Warning Light Circuit Check – Light Does Not Come “ON” at Ignition Switch ON (Non-Euro-OBD Model) 5A-43
DTC P0602: Control Module Programming Error 5A-44
DTC P0705: Transmission Range Sensor Circuit Malfunction (PRNDL Input) 5A-44
DTC P0707: Transmission Range Sensor Circuit Low 5A-46
DTC P0711: Transmission Fluid Temperature Sensor “A” Control Range / Performance 5A-48
DTC P0712: Transmission Fluid Temperature Sensor Circuit Low 5A-49
DTC P0713: Transmission Fluid Temperature Sensor Circuit High 5A-50
DTC P0717: Input / Turbine Speed Sensor Circuit Malfunction 5A-52
DTC P0722: Output Speed Sensor (VSS) Circuit No Signal 5A-53
DTC P0741 / P0742: TCC Circuit Performance or Stuck OFF / TCC Circuit Stuck ON 5A-55
DTC P0751 / P0752 / P0756 / P0757: Shift Solenoid Malfunction 5A-56
DTC P0787: Shift / Timing Solenoid Control Circuit Low 5A-57
DTC P0788: Shift / Timing Solenoid Control Circuit High 5A-59
DTC P0961: Pressure Control Solenoid “A” Control Circuit Range / Performance 5A-60
DTC P0962: Pressure Control Solenoid Control Circuit Low 5A-62
DTC P0963: Pressure Control Solenoid Control Circuit High 5A-64
DTC P0973 / P0976: Shift Solenoid-A (No.1) Control Circuit Low / Shift Solenoid-B (No.2) Control Circuit Low 5A-66
DTC P0974 / P0977: Shift Solenoid-A (No.1) / Shift Solenoid-B (No.2) Control Circuit High 5A-68

DTC P1702: Internal Control Module Memory Check Sum Error 5A-70
DTC P1723: Range Select Switch Malfunction 5A-70
DTC P1878: Torque Converter Clutch Shudder 5A-71
DTC P2762: Torque Converter Clutch (TCC) Pressure Control Solenoid Control Circuit Range / Performance 5A-72
DTC P2763: Torque Converter Clutch (TCC) Pressure Control Solenoid Control Circuit High 5A-74
DTC P2764: Torque Converter Clutch (TCC) Circuit Pressure Control Solenoid Control Circuit Low 5A-76
DTC U0073: Control Module Communication Bus Off 5A-78
DTC U0100: Lost Communication with ECM / PCM “A” 5A-78
Inspection of TCM and Its Circuits 5A-78
TCM Power and Ground Circuit Check 5A-82
Brake Interlock System Inspection 5A-83
Repair Instructions 5A-84
Learning Control Initialization 5A-84
A/T Fluid Level Check 5A-84
A/T Fluid Change 5A-85
Select Lever Components 5A-86
Select Lever Assembly Removal and Installation 5A-86
Select Lever Knob Installation 5A-86
Select Lever Inspection 5A-87
“3” Position Switch Inspection 5A-87
Shift Lock Solenoid Inspection 5A-87
Shift Lock Solenoid Replacement 5A-87
Select Cable Components 5A-88
Select Cable Removal and Installation 5A-88
Select Cable Adjustment 5A-88
Key Interlock Cable Removal and Installation 5A-89
Transmission Range Sensor Inspection and Adjustment 5A-91
Output Shaft Speed Sensor (VSS) Removal and Installation 5A-92
Output Shaft Speed Sensor (VSS) Inspection 5A-92
Input Shaft Speed Sensor Removal and Installation 5A-93
Input Shaft Speed Sensor Inspection 5A-93
Transmission Fluid Temperature Sensor Removal and Installation 5A-93
Transmission Fluid Temperature Sensor Inspection 5A-94
Solenoid Valves (Shift Solenoid Valves and Timing Solenoid Valve) Removal and Installation 5A-94
Solenoid Valves (Shift Solenoid Valves and Timing Solenoid Valve) Inspection 5A-96
Pressure Control Solenoid Valves (Pressure Control Solenoid and TCC Solenoid) Removal and Installation 5A-97
Pressure Control Solenoid Valves Inspection 5A-98
Transmission Control Module (TCM) Removal and Installation 5A-99
A/T Relay Inspection 5A-99
Differential Side Oil Seal Replacement 5A-100
A/T Fluid Cooler Hoses Replacement 5A-100
Automatic Transaxle Unit Components 5A-101
Automatic Transaxle Unit Dismounting and Remounting 5A-102
Automatic Transaxle Assembly Components 5A-104
Automatic Transaxle Unit Disassembly 5A-106
Oil Pump Assembly Components 5A-118
Oil Pump Assembly Disassembly and Reassembly 5A-118
Oil Pump Assembly Inspection 5A-119
Direct Clutch Assembly Components 5A-121
Direct Clutch Assembly Preliminary Check 5A-121
Direct Clutch Assembly Disassembly and Reassembly 5A-122
Direct Clutch Assembly Inspection 5A-124
Forward and Reverse Clutch Assembly Components 5A-125
Forward and Reverse Clutch Assembly Preliminary Check 5A-125
Forward and Reverse Clutch Assembly Disassembly and Reassembly 5A-126
Forward and Reverse Clutch Assembly Inspection 5A-129
2nd Brake Piston Assembly Components 5A-130
2nd Brake Piston Assembly Disassembly and Reassembly 5A-130
Transaxle Rear Cover (O/D and 2nd Coast Brake Piston) Assembly Components 5A-131
Transaxle Rear Cover (O/D and 2nd Coast Brake Piston) Assembly Disassembly and Reassembly 5A-132
Transaxle Rear Cover (O/D and 2nd Coast Brake Piston) Assembly Inspection 5A-133
Countershaft Assembly Components 5A-134
Countershaft Assembly Disassembly and Reassembly 5A-134
Valve Body Assembly Components 5A-135
Valve Body Assembly Disassembly and Reassembly 5A-136
Differential Assembly Components 5A-137
Differential Assembly Disassembly and Reassembly 5A-138
Differential Assembly Inspection 5A-139
Torque Converter Housing Disassembly and Reassembly 5A-140
Transaxle Case Disassembly and Reassembly 5A-142
Automatic Transaxle Unit Inspection and Adjustment 5A-143
Automatic Transaxle Unit Assembly 5A-146
Specifications 5A-163
Tightening Torque Specifications 5A-163
Special Tools and Equipment 5A-164
Recommended Service Material 5A-164
Special Tool 5A-164

Manual Transmission/Transaxle 5B-1

General Description 5B-1
Manual Transaxle Construction 5B-1
Diagnostic Information and Procedures 5B-5
Manual Transaxle Symptom Diagnosis..... 5B-5
Repair Instructions 5B-5
Manual Transaxle Oil Level Check 5B-5
Manual Transaxle Oil Change 5B-6
Differential Side Oil Seal Replacement..... 5B-7
Gear Shift Control Lever and Cable Components..... 5B-8
Gear Shift Control Lever and Cable Removal and Installation..... 5B-9
Gear Select Control Cable Adjustment 5B-9
Back Up Light Switch Removal and Installation..... 5B-10
Back Up Light Switch Inspection..... 5B-10
Manual Transaxle Unit Components..... 5B-11
Manual Transaxle Unit Dismounting and Remounting..... 5B-12
Gear Shift and Select Shaft Assembly Components..... 5B-13
Gear Shift and Select Shaft Assembly Removal and Installation..... 5B-14
Gear Shift and Select Shaft Assembly Disassembly and Reassembly..... 5B-15
Manual Transaxle Assembly Components..... 5B-16
Fifth Gear Disassembly and Reassembly..... 5B-17
Manual Transaxle Assembly Disassembly and Reassembly 5B-19
Right Case Disassembly and Reassembly 5B-24
Left Case Disassembly and Reassembly..... 5B-25
Input Shaft and Countershaft Components..... 5B-27
Input Shaft Disassembly and Reassembly..... 5B-28
Countershaft Disassembly and Reassembly 5B-31
Gear Shift Shaft Components 5B-35
5th and Reverse Gear Shift Shafts Disassembly and Reassembly..... 5B-35
Gear Shift Shaft and Fork Inspection..... 5B-35
Differential Components..... 5B-36
Differential Disassembly and Reassembly..... 5B-36
Specifications 5B-38
Tightening Torque Specifications..... 5B-38
Special Tools and Equipment 5B-39
Recommended Service Material 5B-39
Special Tool 5B-39

Clutch 5C-1

General Description 5C-1
Clutch (Hydraulic Type) Construction 5C-1
Diagnostic Information and Procedures 5C-2
Clutch System Symptom Diagnosis 5C-2
Repair Instructions 5C-3
Clutch Pedal Inspection 5C-3
Clutch Fluid Level Inspection 5C-3
Air Bleeding of Clutch System.....5C-3
Clutch Fluid Pipe and Hose Components 5C-4
Clutch Fluid Pipe Removal and Installation.....5C-4
Clutch Fluid Pipe Inspection.....5C-4
Clutch Master Cylinder Removal and Installation 5C-5
Clutch Operating Cylinder Assembly Removal and Installation.....5C-5
Clutch Operating Cylinder Assembly Inspection.....5C-6
Clutch Cover, Clutch Disc and Flywheel Components.....5C-6
Clutch Cover, Clutch Disc and Flywheel Removal and Installation.....5C-7
Clutch Cover, Clutch Disc and Flywheel Inspection.....5C-8
Specifications 5C-9
Tightening Torque Specifications.....5C-9
Special Tools and Equipment 5C-10
Recommended Service Material 5C-10
Special Tool 5C-10

Precautions

Precautions

Precautions on Transmission / Transaxle

S7RW0A5000001

Air Bag Warning
Refer to “Air Bag Warning in Section 00”.

Precautions in Diagnosing Trouble
Refer to “Precautions in Diagnosing Trouble in Section 5A”.

Precautions for Disassembly and Reassembly
Refer to “Precautions for Disassembly and Reassembly in Section 5A”.

Precaution on CAN Troubleshooting
Refer to “Precaution on CAN Troubleshooting in Section 1A”.

Automatic Transmission/Transaxle

Precautions

Precautions in Diagnosing Trouble

S7RW0A5100001

- Do not disconnect couplers from TCM, battery cable from battery, TCM ground wire harness from engine or main fuse before checking the diagnostic information (DTC, freeze frame data, etc.) stored in TCM memory. Such disconnection will clear memorized information in TCM memory.
- Diagnostic information stored in TCM memory can be cleared as well as checked by using SUZUKI scan tool or CAN communication OBD generic scan tool. Before using scan tool, read its Operator's (Instruction) Manual carefully to have good understanding as to what functions are available and how to use it.
  It is indistinguishable which module turns on MIL because not only ECM but also TCM turns on MIL. Therefore, check both ECM and TCM for DTC when MIL lights on.
  When checking TCM for DTC, keep in mind that DTC is displayed on the scan tool as follows depending on the scan tool used.
  - SUZUKI scan tool displays DTC detected by TCM.
  - CAN communication OBD generic scan tool displays DTC detected by each of ECM and TCM simultaneously.
- Be sure to read "Precautions for Electrical Circuit Service in Section 00" before inspection and observe what is written there.
- TCM replacement
  - When substituting a known-good TCM, check that all relays and actuators have resistance of specified value.
    Neglecting this check may result in damage to good TCM.
- Communication of ECM, BCM, combination meter, keyless start control module (if equipped), ABS / ESP® control module, 4WD control module (if equipped), steering angle sensor (if equipped), yaw rate / G sensor (if equipped), TCM and DLC, is established by CAN (Controller Area Network). (For more detail of CAN communication for ECM, refer to "CAN Communication System Description").
  Therefore, handle CAN communication line with care referring to "Precaution for CAN Communication System in Section 00".

Precautions for Disassembly and Reassembly

S7RW0A5100002

When repairing automatic transaxle, it is necessary to conduct the on-vehicle test to investigate where the cause of the trouble lies first.
Then whether overhaul should be done or not is determined. If the transaxle is disassembled without such preliminary procedure, not only the cause of the trouble would be unknown, but also a secondary trouble may occur and often time would be wasted.
As the automatic transaxle consists of high precision component, the following cautions should be strictly observed when handling its parts in disassembly and reassembly.

- Disassembling valve body assembly is prohibited essentially. However, a few parts can be disassembled. When disassembling valve body component parts, confirm whether their parts are allowed to disassemble or not referring to "Valve Body Assembly Disassembly and Reassembly".
- When component part of forward clutch, direct clutch, 2nd brake and/or O/D and 2nd coast brake, namely clutch disc, brake disc, retaining plate and/or separator plate, have been replaced, all learned contents, which have been stored in TCM memory by executing learning control, should be initialized referring to "Learning Control Initialization".
- Make sure to wash dirt off from the transaxle so that no such dirt will enter the transaxle during dismounting and remounting.
- Select a clean place free from dust and dirt for overhauling.
- Place a rubber mat on the work bench to protect parts from damage.
- Work gloves or shop cloth should not be used. (Use a nylon cloth or a paper towel.)
- When separating the case joint, do not pry with a screwdriver or such but tap with a plastic hammer lightly.
- Make sure to wash dirt off from the transaxle so that no such dirt will enter the transaxle during disassembly and reassembly.
- Wash the disassembled parts in ATF (Automatic Transaxle Fluid) or kerosene (using care not to allow ATF or kerosene to get on your face, etc.) and confirm that each fluid passage is not clogged by blowing air into it. But use kerosene to wash the discs, resin washers and rubber parts.
- Replace each gasket, oil seal and O-ring with a new one.
- Apply ATF to sliding or rotating parts before reassembly.

⚠ **CAUTION**

- **Keep component parts in group for each subassembly and avoid mixing them up.**
- **Clean all parts with cleaning solvent thoroughly and air dry them.**
- **Use kerosene or automatic transaxle fluid as cleaning solvent.**
- **Do not use wiping cloths or rags to clean or dry parts.**
- **All oil passages should be blown out and checked to make sure that they are not obstructed.**
- **Keep face and eyes away from solvent spray while air blowing parts.**
- **Check mating surface for irregularities and remove them, if any, and clean it again.**
- **Soak new clutch discs and brake discs in transaxle fluid for at least 2 hours before assembly.**
- **Replace all gaskets and O-ring with new ones.**
- **Apply automatic transaxle fluid to all O-rings.**
- **When installing seal ring, be careful so that it is not expanded excessively, extruded or caught.**
- **Replace oil seals that are removed and apply grease to their lips.**
- **Before installing, be sure to apply automatic transaxle fluid to sliding, rolling and thrusting surface of all component part. Also after installation, make sure to check each part for proper operation.**
- **Always use torque wrench when tightening bolts.**

- A new discs should be soaked in ATF at least 2 hours before use.

Part Inspection and Correction Table

Part	Inspect for	Correction
Casted part, machined part	Small flaw, burr	Remove with oil stone.
	Deep or grooved flaw	Replace part.
	Clogged fluid passage	Clean with air or wire.
	Flaw on installing surface, residual gasket	Remove with oil stone or replace part.
	Crack	Replace part.
Bearing	Unsmooth rotation	Replace.
	Streak, pitting, flaw, crack	Replace.
Bushing, thrust washer	Flaw, burr, wear, burning	Replace.
Oil seal, gasket	Flawed or hardened seal ring	Replace.
	Worn seal ring on its periphery or side	Replace.
	Piston seal ring, oil seal, gasket, etc.	Replace.
Gear	Flaw, burr	Replace.
	Worn gear tooth	Replace.
Splined part	Burr, flaw, torsion	Correct with oil stone or replace.
Snap ring	Wear, flaw, distortion	Replace.
	No interference	Replace.
Thread	Burr	Replace.
	Damage	Replace.
Spring	Settling, sign of burning	Replace.
Friction plate	Wear, burning, distortion, damaged claw	Replace.
Separator plate, retaining plate	Wear, burning, distortion, damaged claw	Replace.
Sealing surface (where lip contacts)	Flaw, rough surface, stepped wear, foreign material	Replace.

General Description

A/T Description

S7RW0A5101001

This automatic transaxle is electronic control full automatic transaxle with forward 3-speed plus overdrive (O/D) and reverse 1-speed.
The torque converter is a 3-element, 1-step and 2-phase type and is equipped with an automatically controlled lock-up mechanism.
The gear change device consists of a ravigneau type planetary gear unit, 3 multiple disc type clutches, 3 multiple disc type brakes and 2 one-way clutches.
The hydraulic pressure control device consists of a valve body assembly, pressure control solenoid valve (linear solenoid), 2 shift solenoid valves, TCC solenoid valve (TCC pressure control solenoid valve) (linear solenoid) and a timing solenoid valve. Optimum line pressure complying with engine torque is produced by the pressure control solenoid valve in dependence upon control signal from transmission control module (TCM). This makes it possible to control the line pressure with high accuracy in accordance with the engine power and running conditions to achieve smooth shifting characteristics and high efficiency.
A clutch-to-clutch control system is provided for shifting between 3rd gear and 4th gear. This clutch-to-clutch control system is made to function optimally, so that hydraulic pressure controls such as shown below are conducted.

- When upshifting from 3rd gear to 4th gear, to adjust the drain hydraulic pressure at releasing the forward clutch, a timing solenoid valve is used to switch a hydraulic passage with an orifice to another during shifting.
- When downshifting from 4th gear to 3rd gear, to adjust the line pressure applied to the forward clutch at engaging the forward clutch, a timing solenoid valve is used to switch a hydraulic passage with an orifice to another during shifting.
- When upshifting from 3rd gear to 4th gear with engine throttle opened, to optimize the line pressure applied to the forward clutch at releasing the forward clutch, the learning control is processed to compensate the switching timing of the timing solenoid at every shifting.
- When downshifting from 4th gear to 3rd gear with engine throttle opened, to optimize the line pressure applied to the forward clutch at engaging the forward clutch, the learning control is processed to compensate the line pressure at every shifting.

Employing the ravigneau type planetary gear unit and this clutch-to-clutch control system greatly simplifies the construction to make possible a lightweight and compact transaxle.
A line pressure learning control is conducted to provide optimum shifting time at every upshifting with engine throttle opened. If long upshifting time is detected, the subsequent line pressure applied during upshifting is intensified. On the contrary, if short upshifting time is detected, the subsequent line pressure applied during upshifting is weakened.

Slip controlled lock-up function (if equipped)

Even at a lower speed than when the TCC gets engaged completely, control over the TCC pressure control solenoid works to cause the TCC to slip (be engaged slightly), thereby improving the transmission efficiency. While such slip control is being executed, the oil pressure applied to the TCC is controlled by the TCC pressure control solenoid so that the difference between the engine speed and the input shaft speed becomes close to the specified value.
Also, during deceleration, the TCC is made to slip (be engaged slightly) to raise the engine speed and enlarge the fuel cut operation range so that better fuel consumption is achieved.
Due to this reason, it is absolutely necessary for the automatic transmission to use ATF suitable for slip control. Use of any fluid other than the specified ATF may cause juddering or some other faulty condition to occur.

NOTE

There are two types of A/T system, with slip control and without slip control, depending on the vehicle specification.
It is possible to identify each system by label (1) on TCM (2) as follows.

- **“E0”: A/T system with slip control.**
- **Other than “E0”: A/T system without slip control.**

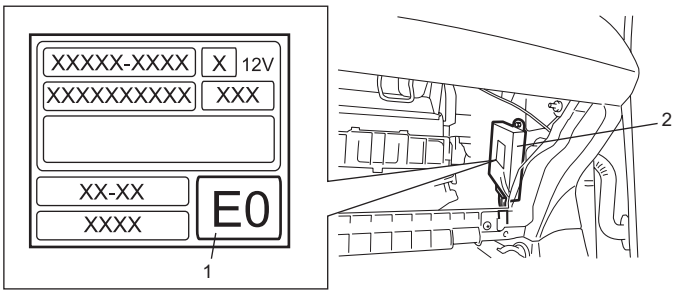

I7RW0A510001-01

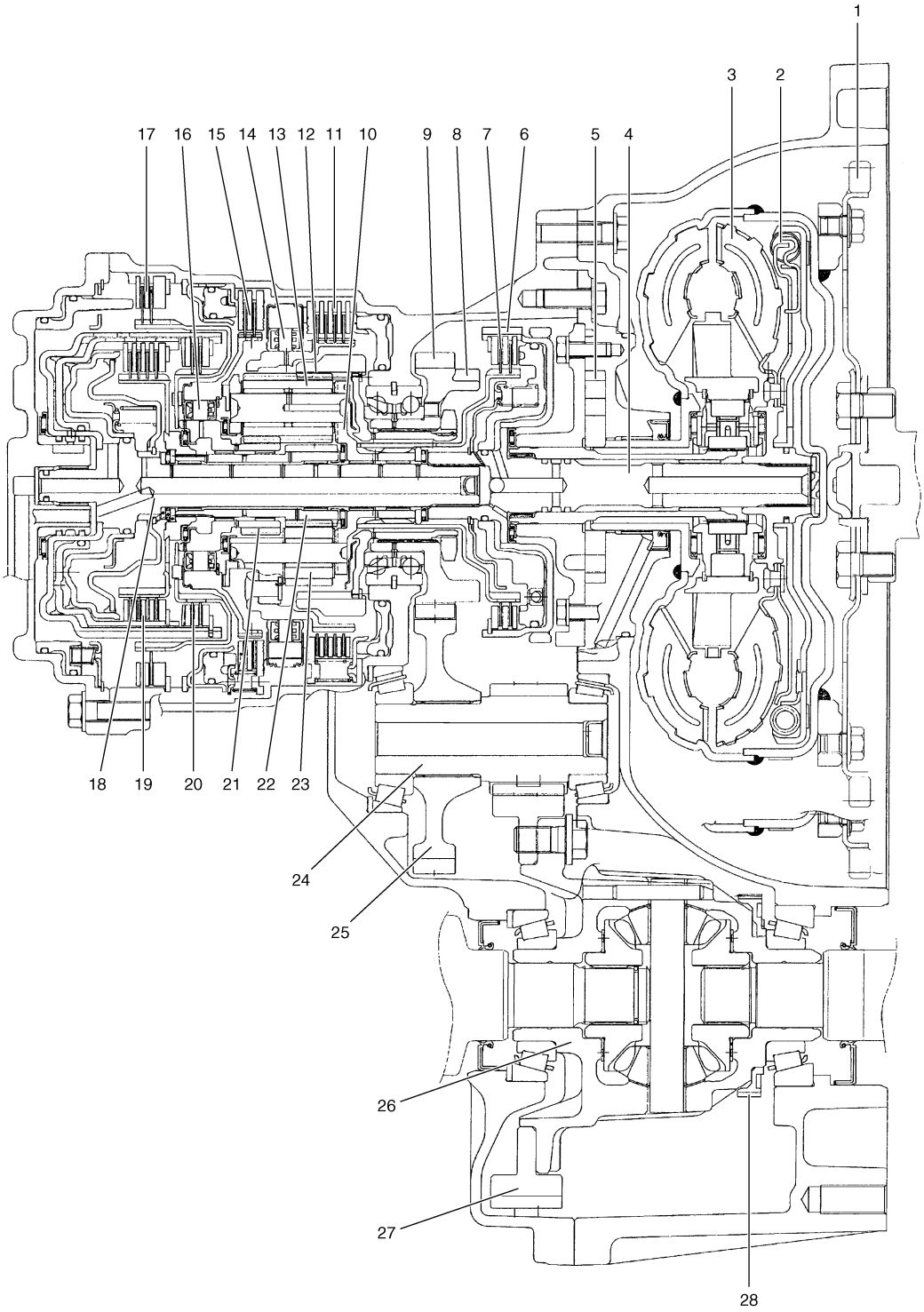

I5RW0C510070-01

1. Drive plate	11. 1st and reverse brake	21. Rear sun gear
2. Torque converter clutch (TCC)	12. Ring gear	22. Front sun gear
3. Torque converter	13. Long planet pinion	23. Short planet pinion
4. Input shaft	14. One-way No.2 clutch	24. Countershaft
5. Oil pump	15. 2nd brake	25. Reduction driven gear
6. Direct clutch drum (double as sensor rotor for input shaft speed sensor)	16. One-way No.1 clutch	26. Differential case assembly
7. Direct clutch	17. O/D and 2nd coast brake	27. Final gear
8. Parking lock gear	18. Intermediate shaft	28. Output shaft speed sensor (VSS) drive gear
9. Reduction drive gear	19. Forward clutch	
10. Planet carrier	20. Reverse clutch	

Specifications

Item			Specifications	
Torque converter	Type Stall torque ratio		3-element, 1-step, 2-phase type (with TCC (lock-up) mechanism) 1.9 – 2.1	
Oil pump	Type Drive system		Internal involute gear type oil pump (non crescent type) Engine driven	
Gear change device	Type		Forward 4-step, reverse 1-step planetary gear type	
	Shift position		“P” range	Gear in neutral, output shaft fixed, engine start
			“R” range	Reverse
			“N” range	Gear in neutral, engine start
			“D” range	Forward 1st ↔ 2nd ↔ 3rd ↔ 4th automatic gear change
			“3” range	Forward 1st ↔ 2nd ↔ 3rd ← 4th automatic gear change
			“2” range	Forward 1st ↔ 2nd ← 3rd automatic gear change
			“L” range	Forward 1st ← 2nd ← 3rd reduction, and fixed at 1st gear
	Gear ratio	1st	2.875	Number of teeth Front sun gear: 24 Rear sun gear: 30 Long planet pinion: 20 Short planet pinion: 19 Ring gear: 69
		2nd	1.568	
		3rd	1.000	
		4th (overdrive gear)	0.697	
		Reverse (reverse gear)	2.300	
	Control elements		Wet type multiple-disc clutch... 3 sets Wet type multiple-disc brake... 3 sets One-way clutch... 2 sets	
	Reduction gear ratio		1.023	
	Final gear reduction ratio		4.277	
Lubrication	Lubrication system		Force feed system by oil pump	
Cooling	Cooling system		Radiator assisted cooling (water-cooled)	
Fluid used			SUZUKI ATF 3317 or Mobil ATF 3309	

Clutch / Brake / Planetary Gear Function of Automatic Transaxle

S7RW0A5101002

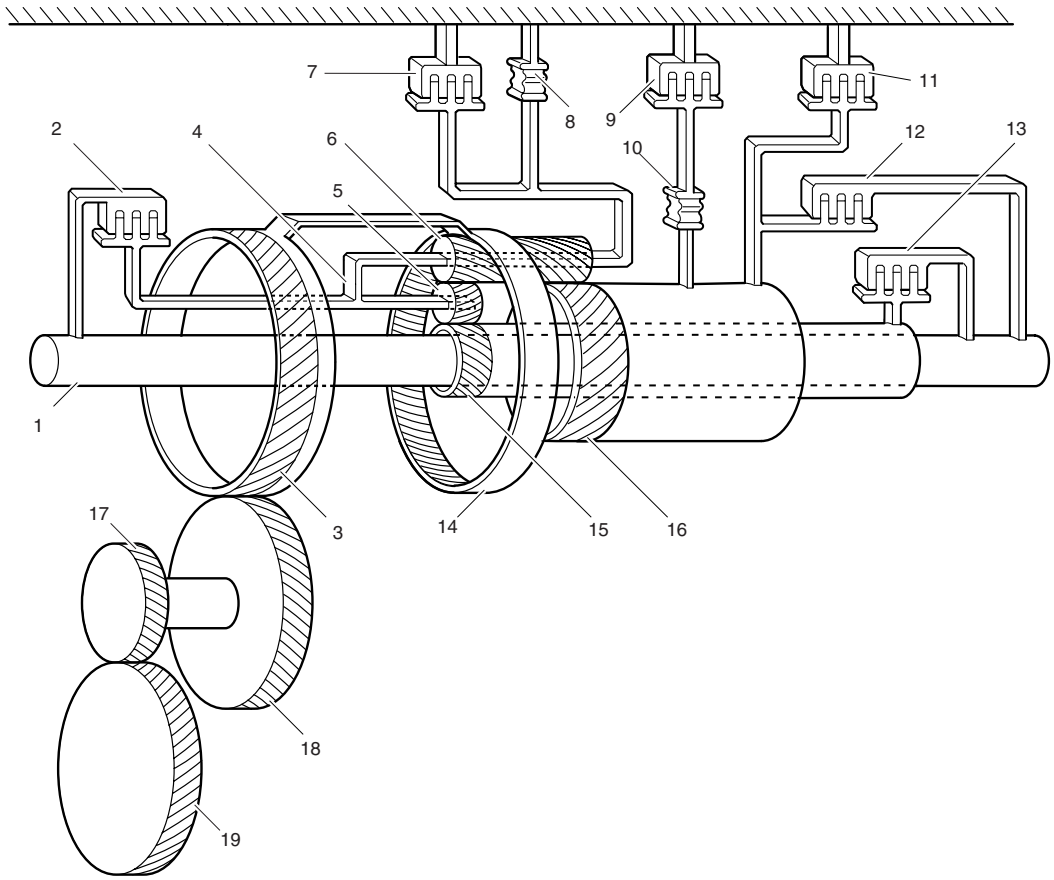

I4RS0A510001-01

1. Input shaft and intermediate shaft	8. One-way No.2 clutch	15. Front sun gear
2. Direct clutch	9. 2nd brake	16. Rear sun gear
3. Reduction drive gear	10. One-way No.1 clutch	17. Final drive gear
4. Planet carrier	11. O/D and 2nd coast brake	18. Reduction driven gear
5. Short planet pinion	12. Reverse clutch	19. Final driven gear
6. Long planet pinion	13. Forward clutch	
7. 1st and reverse brake	14. Ring gear	

Functions

Part name	Function
Forward clutch	Meshes intermediate shaft and front sun gear
Direct clutch	Meshes input shaft and planet carrier
Reverse clutch	Meshes intermediate shaft and rear sun gear
O/D and 2nd coast brake	Fixes rear sun gear
2nd brake	Fixes rear sun gear
1st and reverse brake	Fixes planet carrier
One-way No.1 clutch	Prevents rear sun gear from turning counterclockwise
One-way No.2 clutch	Prevents planet carrier from turning counterclockwise

Table of Component Operation

S7RW0A5101003

Selector position	Gear position	Part					
		Shift solenoid valve-A (No.1)	Shift solenoid valve-B (No.2)	TCC solenoid valve	Forward clutch	Direct clutch	Reverse clutch
P	Parking	○	○	×	×	×	×
R	Reverse	○	○	×	×	×	○
N	Neutral	○	○	×	×	×	×
D	1st	○	○	×	○	×	×
	2nd	○	×	×	○	×	×
	3rd	×	×	△	○	○	×
	4th	×	○	△	×	○	×
2	1st	○	○	×	○	×	×
	2nd	○	×	×	○	×	×
L	1st	○	○	×	○	×	×

Selector position	Gear position	Part				
		O/D and 2nd coast brake	2nd brake	1st and reverse brake	One-way No.1 clutch	One-way No.2 clutch
P	Parking	×	×	×	×	×
R	Reverse	×	×	○	×	×
N	Neutral	×	×	×	×	×
D	1st	×	×	×	×	○
	2nd	×	○	×	○	×
	3rd	×	○	×	×	×
	4th	○	○	×	×	×
2	1st	×	×	×	×	○
	2nd	○	○	×	○	×
L	1st	×	×	○	×	○

○: ON
×: OFF
△: ON only when TCC is operating

Operation of Shift Solenoid Valves, Timing Solenoid Valve and TCC Solenoid Valve

S7RW0A5101007

Selector position	Gear position	Solenoid				Condition
		Shift solenoid valve-A (No.1)	Shift solenoid valve-B (No. 2)	Timing solenoid valve	TCC solenoid valve	
P	Parking	○	○	×	×	
R	Reverse	○	○	×	×	When vehicle is traveling forwards in less than 9 km/h, 6 mile/h vehicle speed
		○	○	○	×	When vehicle is traveling forwards in 11 km/h, 7 mile/h or more vehicle speed
	(Reverse)	×	×	×	×	When fail-safe function is operating
N	Neutral	○	○	×	×	
D	Neutral → 1st	—	—	○	—	Timing solenoid is turned ON for about 0.5 sec. while on gear shifting
	1st	○	○	×	×	
	2nd	○	×	×	×	
	3rd	×	×	×	△	
	3rd ↔ 4th	—	—	○	—	Timing solenoid is turned ON for about 0.5 sec. while on gear shifting
	4th	×	○	×	△	
	(3rd)	×	×	×	×	When fail-safe function is operating
2	1st	○	○	×	×	
	2nd	○	×	×	×	
	(3rd)	×	×	×	×	When fail-safe function is operating

Selector position	Gear position	Solenoid				Condition
		Shift solenoid valve-A (No.1)	Shift solenoid valve-B (No. 2)	Timing solenoid valve	TCC solenoid valve	
L	1st	○	○	×	×	
	(3rd)	×	×	×	×	When fail-safe function is operating

○: ON (Turn power ON)
×: OFF (Turn power OFF)
△: ON only when TCC is operating

	Valve status	
	Turn power ON	Turn power OFF
Shift solenoid valve-A (No.1)	Close	Open
Shift solenoid valve-B (No.2)	Close	Open
Timing solenoid valve	Open	Close
TCC solenoid valve	Close	Open

Automatic Gear Shift Table

S7RW0A5101008

Automatic gear shift schedule is shown in the following table. Test-drive the vehicle on a flat road in the D, 3 and/or 2 position.

M16A Engine Model

1.Shift Point in D, 3 and/or 2 position

	Throttle opening (%)	Shift	Vehicle speed km/h (mph)	Remark
UP shift	Over 85%	1st → 2nd	48 – 53 (30 – 33)	D, 3, 2 range
		2nd → 3rd	98 – 103 (61 – 64)	D, 3 range
		3rd → 4th	158 – 163 (98 – 101)	D range
	50%	1st → 2nd	35 – 40 (22 – 25)	D, 3, 2 range
		2nd → 3rd	69 – 74 (43 – 46)	D, 3 range
		3rd → 4th	106 – 111 (66 – 69)	D range
	10%	1st → 2nd	11 – 16 (7 – 10)	D, 3, 2 range
		2nd → 3rd	23 – 28 (14 – 17)	D, 3 range
		3rd → 4th	51 – 56 (32 – 35)	D range
DOWN shift	Over 85%	4th → 3rd	144 – 149 (89 – 93)	D range
		3rd → 2nd	91 – 96 (57 – 60)	D, 3 range
		2nd → 1st	42 – 47 (26 – 29)	D, 3, 2 range
	50%	4th → 3rd	73 – 78 (45 – 48)	D range
		3rd → 2nd	36 – 41 (22 – 25)	D, 3 range
		2nd → 1st	11 – 16 (7 – 10)	D, 3, 2 range
	10%	4th → 3rd	30 – 35 (19 – 22)	D range
		3rd → 2nd	15 – 20 (9 – 12)	D, 3 range
		2nd → 1st	6 – 11 (4 –7)	D, 3, 2 range

2. Lock-up point in D and/or 3 position

	Lock-up clutch status	Throttle opening (%)	Vehicle speed km/h (mph)	Remark
3rd gear lock-up	ON	Over 85%	123 – 128 (76 – 80)	D, 3 range
		50%	90 – 95 (56 – 59)	D, 3 range
	OFF	Over 90%	105 – 110 (65 – 68)	D, 3 range
		50%	76 – 81 (47 – 50)	D, 3 range

	Lock-up clutch status	Throttle opening (%)	Vehicle speed km/h (mph)	Remark
4th gear lock-up	ON	Over 85%	158 – 163 (98 – 101)	• D range • Except throttle opening shift from low to high at vehicle speed 160 km/h (100 mph) or more with Lock-up ON condition.
		50%	132 – 137 (82 – 85)	D range
	OFF	Over 90%	144 – 149 (89 – 93)	D range
		50%	122 – 127 (76 – 79)	D range

3. Slip lock-up point in D and/or 3 position (with slip control)

	Slip Lock-up clutch status	Throttle opening (%)	Vehicle speed km/h (mph)	Remark
3rd gear	Slip ON	15 – 20%	52 – 56 (32 – 35)	Without lock-up condition
	Slip OFF	15 – 20%	45 – 49 (28 – 30)	
4th gear	Slip ON	15 – 20%	68 – 72 (42 – 45)	Without lock-up condition
	Slip OFF	15 – 20%	61 – 65 (38 – 40)	

M15A Engine Model

1.Shift Point in D, 3 and/or 2 position

	Throttle opening (%)	Shift	Vehicle speed km/h (mph)	Remark
UP shift	Over 90%	1st → 2nd	50 – 55 (31 - 34)	D, 3, 2 range
		2nd → 3rd	100 – 105 (62 - 65)	D, 3 range
		3rd → 4th	162 – 167 (101 - 104)	D range
	50%	1st → 2nd	34 – 39 (21 - 24)	D, 3, 2 range
		2nd → 3rd	76 – 81 (47 - 50)	D, 3 range
		3rd → 4th	120 – 125 (75 - 78)	D range
	10%	1st → 2nd	15 – 20 (9 - 12)	D, 3, 2 range
		2nd → 3rd	45 – 50 (28 - 31)	D, 3 range
		3rd → 4th	66 – 71 (41 - 44)	D range
DOWN shift	Over 95%	4th → 3rd	144 – 149 (89 – 93)	D range
		3rd → 2nd	87 – 92 (54 – 57)	D, 3 range
		2nd → 1st	44 – 49 (27 – 30)	D, 3, 2 range
	50%	4th → 3rd	66 – 71 (41 – 44)	D range
		3rd → 2nd	26 – 31 (16 – 19)	D, 3 range
		2nd → 1st	6 – 11 (4 – 7)	D, 3, 2 range
	10%	4th → 3rd	53 – 58 (33 – 36)	D range
		3rd → 2nd	15 – 20 (9 – 12)	D, 3 range
		2nd → 1st	6 – 11 (4 – 7)	D, 3, 2 range

2. Lock-up point in D and/or 3 position

	Lock-up clutch status	Throttle opening (%)	Vehicle speed km/h (mph)	Remark
3rd gear lock-up	ON	Over 90%	138 – 143 (86 – 89)	D, 3 range
		50%	118 – 123 (73 – 76)	3 range
	OFF	Over 95%	128 – 133 (80 – 83)	D, 3 range
		50%	108 – 113 (67 – 70)	3 range
4th gear lock-up	ON	Over 90%	162 – 167 (101 – 104)	• D range • Except throttle opening shift from low to high at vehicle speed 160 km/h (100 mph) or more with Lock-up ON condition.
		50%	132 – 137 (82 – 85)	D range
	OFF	Over 95%	152 – 157 (94 – 98)	D range
		50%	113 – 118 (70 – 73)	D range

A/T Diagnosis General Description

S7RW0A5101004

This vehicle is equipped with an electronic transaxle control system, which controls the automatic shift up and shift down timing, TCC operation, etc. suitably to vehicle driving conditions.
TCM has an On-Board Diagnosis System which detects a malfunction in this system.
When diagnosing a trouble in transaxle including this system, be sure to have full understanding of the outline of “On-Board Diagnostic System Description” and each item in “Precautions in Diagnosing Trouble” and execute diagnosis according to “A/T System Check” to obtain correct result smoothly.

NOTE

There are two type of On-Board Diagnostic System, Euro OBD system and non-Euro-OBD system depending on the vehicle specification. For identification, refer to “Precaution on On-Board Diagnostic (OBD) System in Section 1A”.

On-Board Diagnostic System Description

S7RW0A5101005

NOTE

There are two types of OBD system depending on the vehicle specification. For identification, refer to “Precaution on On-Board Diagnostic (OBD) System in Section 1A”.

For automatic transaxle control system, TCM has the following functions.

- For Euro OBD model, when the ignition switch is turned ON with the engine at a stop, MIL (1) turns ON to check the bulb of the MIL.
- For Euro OBD model, when TCM detects a malfunction in A/T control system TCM desires turning on MIL and stores malfunction DTC in TCM memory. (If it detects that continuously 3 driving cycles are normal after detecting a malfunction, however, it makes MIL turn OFF although DTC stored in its memory will remain.)
- For Euro OBD model, it is possible to communicate with TCM through data link connector (DLC) (2) by using not only SUZUKI scan tool (3) but also CAN communication OBD generic scan tool. (Diagnostic information can be checked and erased by using scan tool.)
- For non-Euro-OBD model, when ignition switch is turned ON and no malfunction in A/T control system is detected, transmission warning light (4) lights for about 2 seconds after ignition switch is turned ON and then goes OFF for bulb check.
- For non-Euro-OBD model, when TCM detects a malfunction in A/T control system, it indicates transmission warning light (4) and stores malfunction DTC in its memory.

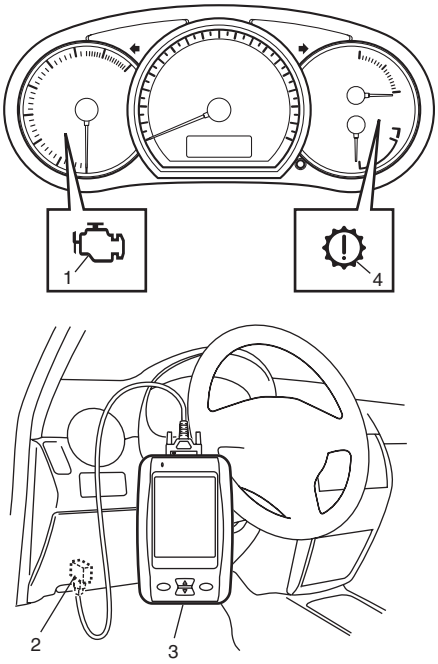

I6RW0B510001-01

- For information about the following items, refer to “On-Board Diagnostic System Description in Section 1A”.
  - Warm-up cycle
  - Driving cycle
  - 2 driving cycle detection logic
  - Pending DTC
  - Freeze frame date

CAN Communication System Description

S7RW0A5101006

Refer to “CAN Communication System Description in Section 1A” for CAN communication System description. TCM communicates control data with each control module as follows.

TCM Transmission Data

				ECM	Combination meter	BCM	4WD control module (if equipped)	ESP® Hydrauric Unit / Control Module Assembly (if equipped)
TCM	Transmit	DATA	Transmission oil temperarure signal	○				
			Torque request signal	○				
			Vehicle speed pulse signal	○				
			Coast slip control signal (with slip control)	○				
			Transmission warning light signal	○	○			
			MIL control signal	○	○			
			A/T select lever position signal	○	○	○	○	○
			Transmission diagnostic trouble code (DTC)	○	○	○	○	○
			Transmission actual gear position signal	○			○	○
			Transmission target gear position signal					○

I7RW0A510002-01

TCM Reception Data

Reception data from ECM	Engine torque signal
	Accelerator pedal position signal
	Engine speed signal
	Throttle position signal
	A/C compressor clutch signal
	Engine coolant temperature signal
	Vehicle speed pulse signal
	Brake pedal switch signal
	Driving cycle active
	Warm up cycle active
	Lock up/ slip control inhibit signal (with slip coltrol)

I7RW0A510003-01

Schematic and Routing Diagram

Transmission Control Module (TCM) Wiring Diagram

S7RW0A5102001

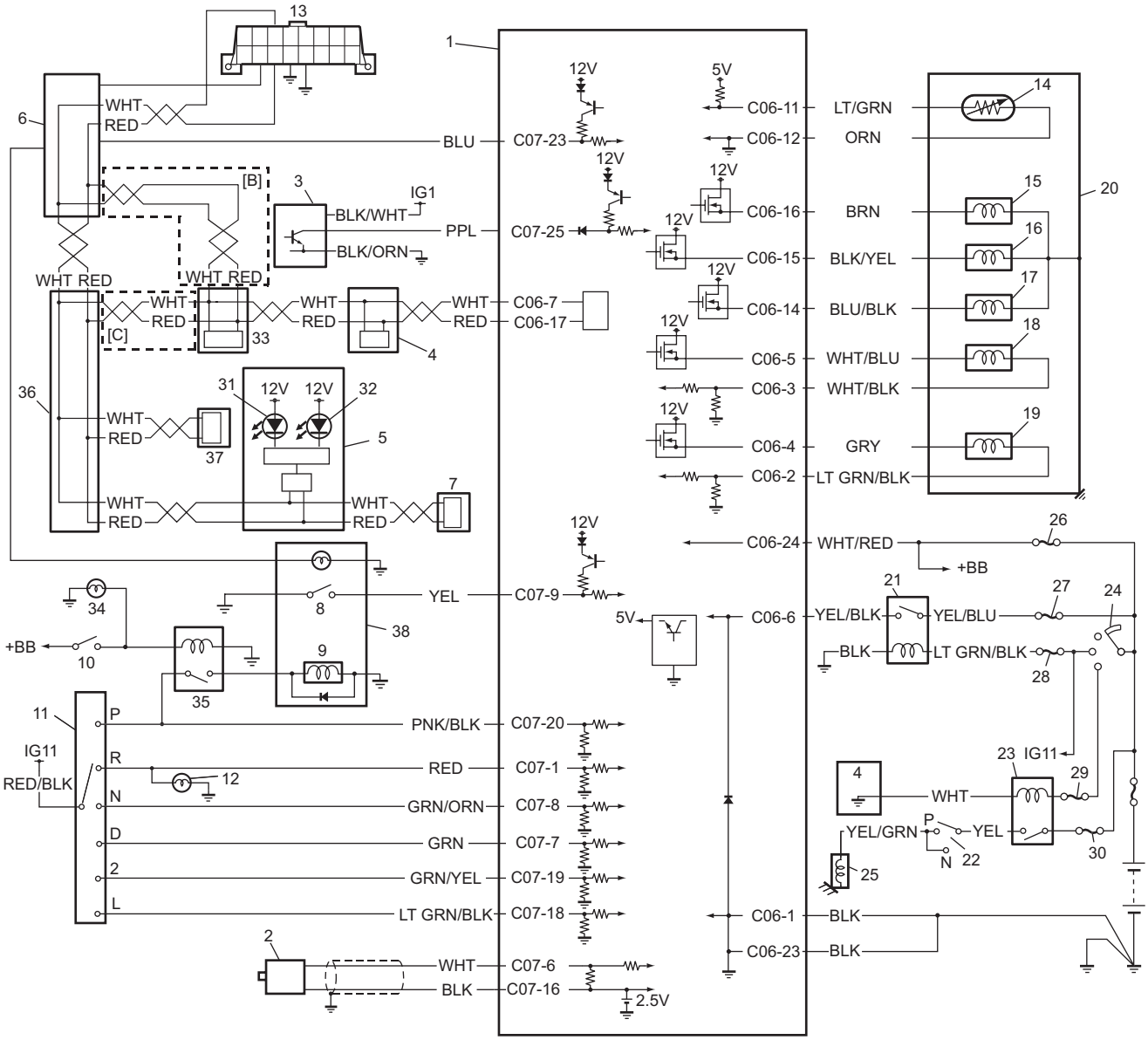

I7RW0A510004-01

1. TCM	15. Shift solenoid valve-A (No.1)	29. “ST SIG” fuse
2. Input shaft speed sensor	16. Shift solenoid valve-B (No.2)	30. “ST” fuse
3. Output shaft speed sensor / VSS	17. Timing solenoid valve	31. MIL
4. ECM	18. TCC solenoid valve	32. Transmission warning light (non-Euro-OBD model)
5. Combination meter	19. Pressure control solenoid valve	33. ABS / ESP® control module
6. BCM	20. A/T	34. Brake light
7. 4WD control module (if equipped)	21. A/T relay	35. Shift lock solenoid relay
8. “3” position switch	22. Inhibitor switch (including transmission range sensor)	36. Junction connector
9. Shift lock solenoid	23. Starter motor relay	37. Keyless start control module (if equipped)
10. Brake light switch	24. Ignition switch	38. Shift lever assembly
11. Transmission range sensor	25. Starter motor	[A]: Terminal arrangement of TCM connector (viewed from harness side)
12. Backup lamp	26. “DOME” fuse	[B]: Junction block with BCM model
13. Data link connector (DLC)	27. “AT” fuse	[C]: Junction block without BCM model
14. Transmission fluid temperature sensor	28. “IG1 SIG” fuse	

A/T System Diagram

S7RW0A5102002

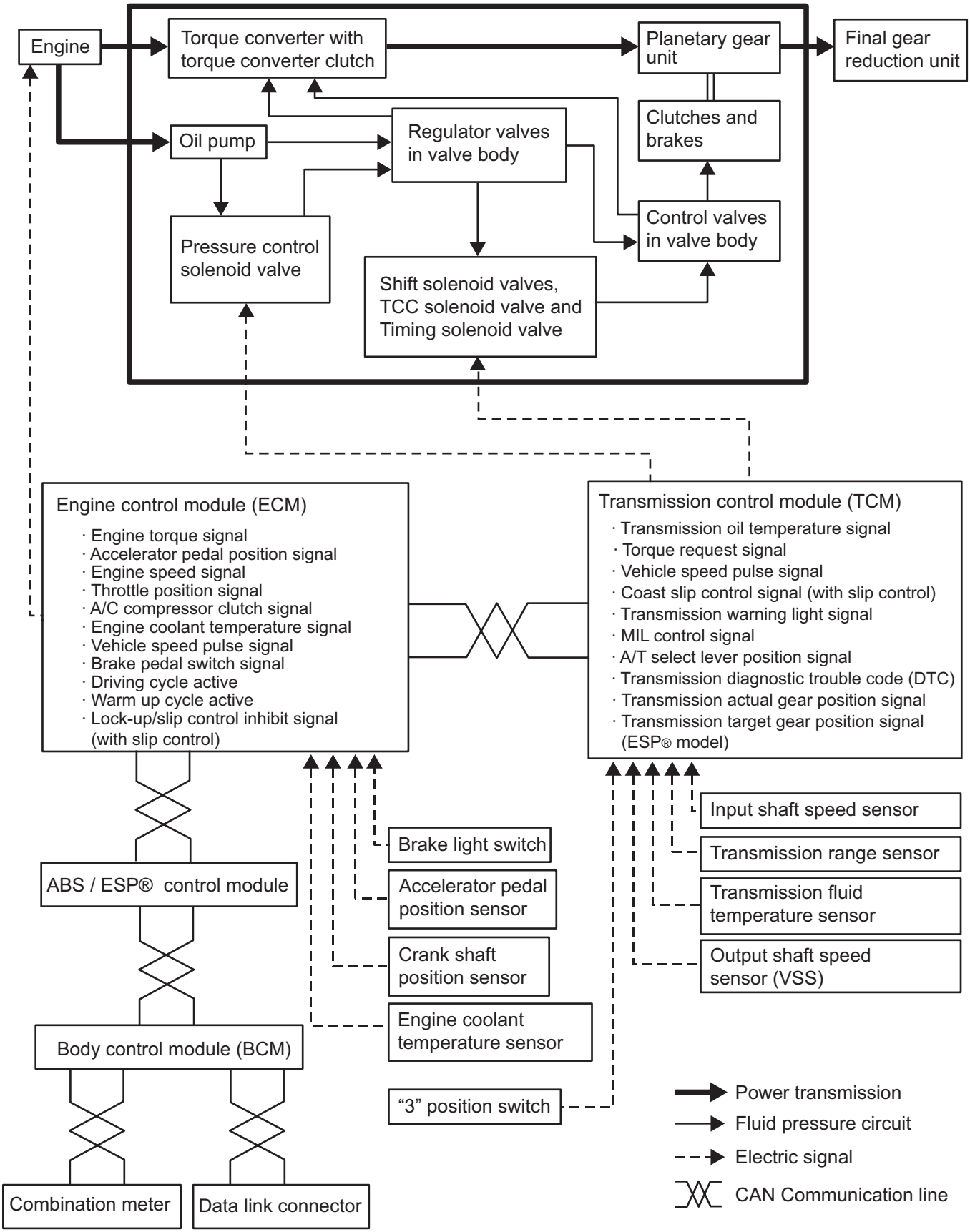

I7RW0A510005-01

Component Location

Electronic Shift Control System Components Location

S7RW0A5103001

NOTE

The figure shows left-hand steering vehicle. For right-hand steering vehicle, parts with (*) are installed at the opposite side.

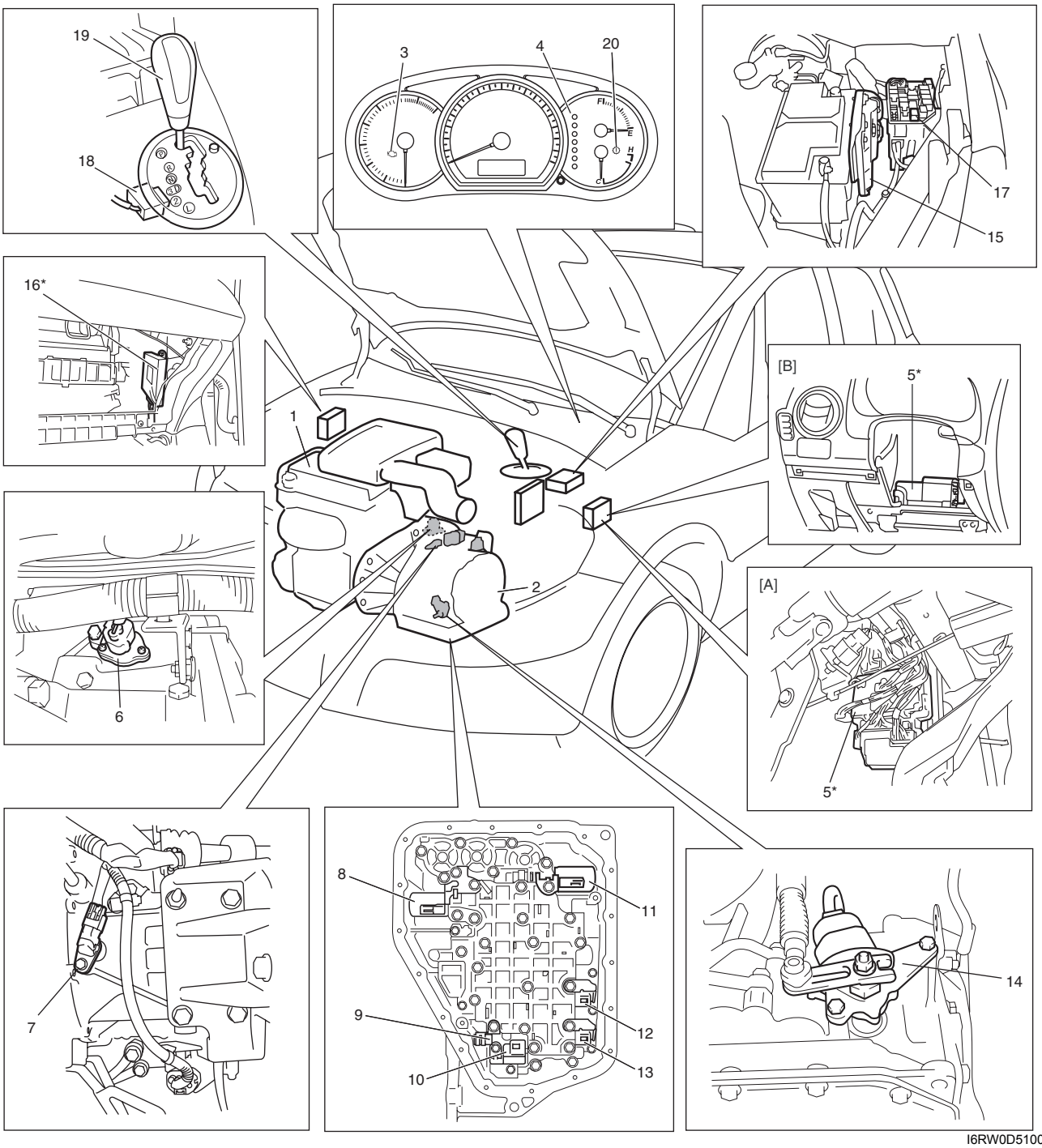

I6RW0D510004-01

[A]: Junction block with BCM model	7. Input shaft speed sensor	15. ECM
[B]: Junction block without BCM model	8. TCC solenoid valve	16. TCM
1. Engine	9. Transmission fluid temperature sensor	17. AT relay
2. Transaxle	10. Timing solenoid valve	18. “3” position switch
3. MIL	11. Pressure control solenoid valve	19. Select lever
4. Transaxle select position indicator	12. Shift solenoid valve-B (No.2)	20. Transmission warning light (non-Euro-OBD model)
5. Junction block assembly	13. Shift solenoid valve-A (No.1)	

6. Output shaft speed sensor (VSS)	14. Transmission range sensor	

Diagnostic Information and Procedures

A/T System Check

S7RW0A5104001

Refer to the following items for the details of each step.

Step	Action	Yes	No
1	☞ **Customer complaint analysis** 1) Perform customer complaint analysis. *Was customer complaint analysis performed?*	Go to Step 2.	Perform customer complaint analysis.
2	☞ **DTC / freeze frame data check, record and clearance** 1) Check for DTC. *Is there any DTC(s)?*	Print DTC or write them down and clear them by referring to “DTC Clearance”. Go to Step 3.	Go to Step 4.
3	☞ **Visual inspection** 1) Perform visual inspection. *Is there any faulty condition?*	Repair or replace malfunction part. Go to Step 11.	Go to Step 5.
4	☞ **Visual inspection** 1) Perform visual inspection. *Is there any faulty condition?*	Repair or replace malfunction part. Go to Step 11.	Go to Step 8.
5	☞ **Trouble symptom confirmation** 1) Confirm trouble symptom. *Is trouble symptom identified?*	Go to Step 6.	Go to Step 7.
6	☞ **Rechecking and record of DTC / freeze frame data** 1) Recheck for DTC referring to “DTC Check”. *Is there any DTC(s)?*	Go to Step 9.	Go to Step 8.
7	☞ **Rechecking and record of DTC / freeze frame data** 1) Recheck for DTC referring to “DTC Check”. *Is there any DTC(s)?*	Go to Step 9.	Go to Step 10.
8	☞ **A/T basic check and A/T symptom diagnosis** 1) Check and repair according to “A/T Basic Check” and “A/T Symptom Diagnosis”. *Are check and repair complete?*	Go to Step 11.	Check and repair malfunction part(s). Go to Step 11.
9	☞ **Troubleshooting for DTC** 1) Check and repair according to applicable DTC flow. *Are check and repair complete?*	Go to Step 11.	Check and repair malfunction part(s). Go to Step 11.
10	☞ **Check for intermittent problems** 1) Check for intermittent problems. *Is there any faulty condition?*	Repair or replace malfunction part(s). Go to Step 11.	Go to Step 11.
11	☞ **Final confirmation test** 1) Clear DTC if any. 2) Perform final confirmation test. *Is there any problem symptom, DTC or abnormal condition?*	Go to Step 6.	End.

Step 1. Customer Complaint Analysis

Record details of the problem such as failure, complaint and how it occurred as described by the customer.
For this purpose, use of such an inspection form will facilitate collecting information to the point required for proper analysis and diagnosis.

Customer problem inspection form (Example)

User name:	Model:	VIN:	
Date of issue:	Date of Reg.:	Date of problem:	Mileage:

PROBLEM SYMPTOMS
☐ Vehicle does not move (R, D, 3, 2, L or any range)
☐ No upshift automatically (☐ 1st to 2nd ☐ 2nd to 3rd ☐ 3rd to 4th (O/D) ☐ 2 range ☐ D range)
☐ No downshift automatically (☐ 3rd to 2nd ☐ 2nd to 1st ☐ 4th (O/D) to 3rd ☐ 2 range ☐ D range)
☐ No gear change manually (☐ 1st ↔ 3rd ☐ 3rd ↔ 4th)
☐ TCC no lock-up ☐ TCC no lock-up off
☐ Automatic shift point too high or too low
☐ Excessive gear change shock (1st/2nd/3rd/4th (O/D)/Reverse)
☐ No kickdown
☐ Transmission slipping in (1st/2nd/3rd/4th (O/D)/Reverse)
☐ Others_____

VEHICLE/ENVIRONMENTAL CONDITION WHEN PROBLEM OCCURS	
Environmental Condition	
Weather Temperature Frequency Read	☐ Fair ☐ Cloudy ☐ Rain ☐ Always ☐ Other_____ (°F/ °C) ☐ Hot ☐ Warm ☐ Cool ☐ Cold ☐ always ☐ Always ☐ Sometimes (times/ day, month) ☐ Only once ☐ Under certain condition ☐ Urban ☐ Suburb ☐ Highway ☐ Mountainous ☐ Uphill ☐ Downhill ☐ Tarmacadam ☐ Gravel ☐ Other_____
Vehicle Condition	
Engine & transmission condition	☐ Cold/ ☐ Warming up phase/ ☐ Warmed up Engine speed (r/min.) Throttle opening (☐ Idle/ ☐ About % ☐ full) O/D cut switch (☐ ON/ ☐ OFF)
Vehicle condition	☐ At stop/ ☐ During driving (☐ Constant speed ☐ Accelerating ☐ Decelerating ☐ Braking) ☐ Right hand corner ☐ Left hand corner ☐ Vehicle speed (km/h mile/h) ☐ Other_____

"O/D OFF" lamp	☐ Blink ☐ Always ON ☐ Sometimes ON ☐ Always OFF ☐ Good condition
Malfunction indicator lamp	☐ Blink ☐ Always ON ☐ Sometimes ON ☐ Always OFF ☐ Good condition
Diagnostic trouble code	First check: ☐ No code ☐ Malfunction code ( )
	Second check: ☐ No code ☐ Malfunction code ( )

I5RW0C510008-01

NOTE

The form is a standard sample. It should be modified according to conditions characteristic of each market.

Step 2. DTC / Freeze Frame Data Check, Record and Clearance
First, referring to “DTC Check”, check DTC and pending DTC. If DTC exists, print or write down DTC and freeze frame data and then clear malfunction DTC(s) by referring to “DTC Clearance”. Malfunction DTC indicates malfunction in the system but it is not possible to know from it whether the malfunction is occurring now or it occurred in the past and normal condition has been restored. In order to know that, check symptom in question according to Step 5 and then recheck DTC according to Step 6.
Diagnosing a trouble based on the DTC in this step only or failure to clear the DTC in this step may result in an faulty diagnosis, trouble diagnosis of a normal circuit or difficulty in troubleshooting which is otherwise unnecessary.

Step 3 and 4. Visual Inspection
As a preliminary step, be sure to perform visual check of the items that support proper function of the engine and automatic transaxle referring to “Visual Inspection”.

Step 5. Trouble Symptom Confirmation
Check trouble symptoms based on information obtained in “Step 1. Customer Complaint Analysis: ” and “Step 2. DTC / Freeze Frame Data Check, Record and Clearance: ”.
Also, reconfirm DTC according to “DTC Confirmation Procedure” described in each DTC flow.

Step 6 and 7. Rechecking and Record of DTC and Freeze Frame Data
Refer to “DTC Check” for checking procedure.

Step 8. A/T Basic Check and A/T Symptom Diagnosis
Perform basic check of A/T according to “A/T Basic Check” first. When the end of the flow has been reached, check the parts of the system suspected as a possible cause referring to “A/T Symptom Diagnosis” and based on symptoms appearing on the vehicle (symptoms obtained through steps of customer complaint analysis, trouble symptom confirmation and/or A/T basic check) and repair or replace faulty parts, if any.

Step 9. Troubleshooting for DTC
Based on the DTC indicated in Step 6 / 7 and referring to “applicable DTC flow”, locate the cause of the trouble, namely in a sensor, switch, wire harness, connector, actuator, TCM or other part and repair or replace faulty parts.

Step 10. Check for Intermittent Problem
Check parts where an intermittent trouble is easy to occur (e.g. wire harness, connector, etc.), referring to “Intermittent and Poor Connection Inspection in Section 00” and related circuit of DTC recorded in Step 2.

Step 11. Final Confirmation Test
Confirm that the problem symptom has gone and the vehicle is free from any abnormal conditions. If what has been repaired is related to the malfunction DTC, clear the DTC once and check to ensure that no malfunction DTC is indicated.

Visual Inspection

S7RW0A5104002

Visually check the following parts and systems.

Inspection item	Referring
• A/T fluid ----- level, leakage, color	“Automatic Transaxle Fluid Level Inspection in Section 0B”
• A/T fluid hoses ----- disconnection, looseness, deterioration	“A/T Fluid Cooler Hoses Replacement”
• Throttle cable (if equipped) ----- play (under warm engine), installation	
• A/T select cable ----- installation	“Select Cable Removal and Installation”
• Engine oil ----- level, leakage	“Engine Oil and Filter Change in Section 0B”
• Engine coolant ----- level, leakage	“Engine Coolant Change in Section 0B”
• Engine mountings ----- play, looseness, damage	“Engine Assembly Removal and Installation in Section 1D”
• Suspension ----- play, looseness	“Suspension, Wheels and Tires Symptom Diagnosis in Section 2A”
• Drive shafts ----- damage	“Front Drive Shaft Assembly On-Vehicle Inspection: Front in Section 3A”
• Battery ----- indicator condition, corrosion of terminal	“Battery Inspection in Section 1J”
• Connectors of electric wire harness ----- disconnection, friction	“Electronic Shift Control System Components Location”
• Fuses ----- burning	
• Parts ----- installation, damage	
• Bolts ----- looseness	
• Other parts that can be checked visually	

Inspection item	Referring
Also check the following items at engine start, if possible.	
• Malfunction indicator lamp ----- Operation	“Malfunction Indicator Lamp (MIL) Check”
• Transmission warning light ----- Operation	“Transmission Warning Light Check (Non-Euro-OBD model)”
• Charge warning lamp ----- Operation	“Generator Symptom Diagnosis in Section 1J”
• Engine oil pressure warning lamp ----- Operation	“Oil Pressure Warning Light Symptom Diagnosis in Section 9C”
• Engine coolant temp. meter ----- Operation	“Engine Coolant Temperature (ECT) Meter Symptom Diagnosis in Section 9C”
• Other parts that can be checked visually	

Malfunction Indicator Lamp (MIL) Check

S7RW0A5104003

Refer to the same item in “Malfunction Indicator Lamp (MIL) Check in Section 1A” for checking procedure.

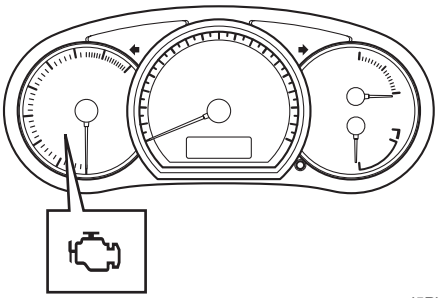

I5RW0C510009-01

Transmission Warning Light Check (Non-Euro-OBD model)

S7RW0A5104004

1) Turn ignition switch ON.
2) Check that transmission warning light lights for about 2 – 4 sec. and then goes OFF.
   If anything faulty is found, advance “Transmission Warning Light Circuit Check – Light Does Not Come “ON” at Ignition Switch ON (Non-Euro-OBD Model)” or “Transmission Warning Light Circuit Check – Light Remains “ON” at Ignition Switch ON (Non-Euro-OBD Model)”.

DTC Table

S7RW0A5104005

NOTE

- **There are two types of OBD system depending on the vehicle specification. For identification, refer to “Precaution on On-Board Diagnostic (OBD) System in Section 1A”.**
- **For non-Euro-OBD model, some of DTC No. with (*) mark in the following table can not be detected by TCM depending on vehicle specification and local regulation.**
- **With the CAN communication OBD generic scan tool, DTC No. with delta (△) mark in the following table can not be read.**
- **A: Driving cycles when MIL lighting and storing DTC in TCM memory for Euro OBD model.**
- **B: Driving cycles when transmission warning light lighting and storing DTC in TCM memory for non-Euro-OBD model.**
- **1 driving cycle: MIL or transmission warning light lights up when DTC is detected during 1 driving cycle.**
- **2 driving cycles: MIL or transmission warning light lights up when the same DTC is detected also in the next driving cycle after DTC is detected and stored temporarily in the first driving cycle.**
- **Driving cycle with (*): MIL or transmission warning light does not light up but TCM detects and stores DTC.**

DTC No.	Detecting item	Detecting condition (DTC will set when detecting)	A	B
☞ △P0602	Control module Programming Error	Data programming error.	—	—
☞ P0705	Transmission range sensor circuit malfunction (PRNDL input)	Multiple signals are inputted simultaneously.	1 driving cycle	1 driving cycle
☞ P0707	Transmission range sensor circuit low	No sensor signal is inputted.	2 driving cycles	2 driving cycles
☞ *P0711	Transmission Fluid Temperature Sensor “A” circuit Range / Performance	Transmission temperature sensor signal is no change for specified time continuously.	2 driving cycles	2 driving cycles*
☞ P0712	Transmission fluid temperature sensor circuit low	Sensor output voltage is too low.	1 driving cycle	1 driving cycle
☞ P0713	Transmission fluid temperature sensor circuit high	Sensor output voltage is too high.	1 driving cycle	1 driving cycle
☞ P0717	Input / Turbine speed sensor circuit no signal	No sensor signal is detected although output speed sensor signal is inputted.	1 driving cycle	1 driving cycle
☞ P0722	Output speed sensor circuit no signal	No sensor signal is inputted although input speed sensor signal is inputted.	1 driving cycle	1 driving cycle
☞ *P0741	Torque converter clutch circuit performance or stuck off	Difference in revolution between engine and input shaft is too large although TCM is commanding TCC solenoid valve to turn ON.	2 driving cycles	2 driving cycles*
☞ *P0742	Torque converter clutch circuit stuck on	Difference in revolution between engine and input shaft is too small although TCM is commanding TCC solenoid valve to turn OFF.	2 driving cycles	2 driving cycles*
☞ *P0751	Shift solenoid-A (No.1) performance or stuck off	Actual gear position is 3rd gear although TCM command is for 2nd gear.	2 driving cycles	2 driving cycles*
☞ *P0752	Shift solenoid-A (No.1) stuck on	Actual gear position is 2nd gear although TCM command is for 3rd gear.	2 driving cycles	2 driving cycles*
☞ *P0756	Shift solenoid-B (No.2) performance or stuck off	Actual gear position is 3rd gear although TCM command is for 4th gear.	2 driving cycles	2 driving cycles*
☞ *P0757	Shift solenoid-B (No.2) stuck on	Actual gear position is 4th gear although TCM command is for 3rd gear.	2 driving cycles	2 driving cycles*
☞ P0787	Shift / Timing solenoid control circuit low	Voltage of timing solenoid terminal is low although TCM is commanding timing solenoid to turn ON.	1 driving cycle	1 driving cycle
☞ P0788	Shift / Timing solenoid control circuit high	Voltage of timing solenoid terminal is high although TCM is commanding timing solenoid to turn OFF.	1 driving cycle	1 driving cycle
☞ P0961	Pressure Control Solenoid “A” Control Circuit Range / Performance	Difference between actual current of control solenoid valve circuit and current of control solenoid valve circuit calculated by TCM is more than specification.	1 driving cycle	1 driving cycle
☞ P0962	Pressure control solenoid control circuit low	No electric flow is detected on pressure control solenoid circuit.	1 driving cycle	1 driving cycle
☞ P0963	Pressure control solenoid control circuit high	Too much electric flow is detected on pressure control solenoid circuit.	1 driving cycle	1 driving cycle
☞ P0973	Shift solenoid-A (No.1) control circuit low	Voltage of shift solenoid terminal is low although TCM is commanding shift solenoid to turn ON.	1 driving cycle	1 driving cycle
☞ P0974	Shift solenoid-A (No.1) control circuit high	Voltage of shift solenoid terminal is high although TCM is commanding shift solenoid to turn OFF.	1 driving cycle	1 driving cycle
☞ P0976	Shift solenoid-B (No.2) control circuit low	Voltage of shift solenoid terminal is low although TCM is commanding shift solenoid to turn ON.	1 driving cycle	1 driving cycle
☞ P0977	Shift solenoid-B (No.2) control circuit high	Voltage of shift solenoid terminal is high although TCM is commanding shift solenoid to turn OFF.	1 driving cycle	1 driving cycle
☞ P1702	Internal control module memory check sum error	Calculation of current data stored in TCM is not correct comparing with pre-stored checking data in TCM.	1 driving cycle	1 driving cycle

DTC No.	Detecting item	Detecting condition (DTC will set when detecting)	A	B
☞ △P1723	Range select switch malfunction	“3” position switch ON signal is inputted although transmission range switch signal is inputted P, R, N or L. range.	1 driving cycle*	1 driving cycle*
☞ △*P1878	Torque converter clutch shudder	Variation in the output revolution speed of the specified amplitude and specified cycle is detected under slip lock-up condition.	20 driving cycles*	20 driving cycles*
☞ P2762	Torque Converter Clutch (TCC) Pressure Control Solenoid Control Circuit Range / Performance	Difference between actual current of TCC solenoid valve circuit and current of TCC solenoid valve circuit calculated by TCM is more than specification.	1 driving cycle	1 driving cycle
☞ P2763	Torque converter clutch pressure control solenoid control circuit high	Too much electric flow is detected on TCC solenoid valve circuit.	1 driving cycle	1 driving cycle
☞ P2764	Torque converter clutch pressure control solenoid control circuit low	No electric flow is detected on TCC solenoid valve circuit.	1 driving cycle	1 driving cycle
☞ U0073	Control Module Communication Bus Off	Transmission error that is inconsistent between transmission data and transmission monitor (CAN bus monitor) data is detected more than specified time continuously.	1 driving cycle	1 driving cycle
☞ U0100	Lost Communication with ECM / PCM “A”	Receiving error from ECM detected to TCM for specified time continuously.	1 driving cycle	1 driving cycle

DTC Check

S7RW0A5104006

NOTE

- **There are two types of OBD system depending on the vehicle specification. For identification, refer to “Precaution on On-Board Diagnostic (OBD) System in Section 1A”.**
- **For Euro-OBD model, the MIL is turned on when the ECM and/or TCM detect malfunction(s). Each control module stores diagnostic information as the diagnostic trouble code (DTC) in its memory and outputs the DTC to the scan tool. Therefore, check both of the control modules for any DTC with the SUZUKI scan tool because the DTC stored in ECM and TCM is not read and displayed at a time. However, each of the control modules needs not to be checked with the CAN communication OBD generic scan tool because the DTC stored in ECM and TCM is read and displayed at a time. In case using CAN communication OBD generic scan tool, refer to “DTC Table in Section 1A”.**

1) Turn ignition switch to OFF position.
2) Connect scan tool to data link connector (DLC) (1).

   Special tool
   (A): SUZUKI scan tool (SUZUKI-SDT)

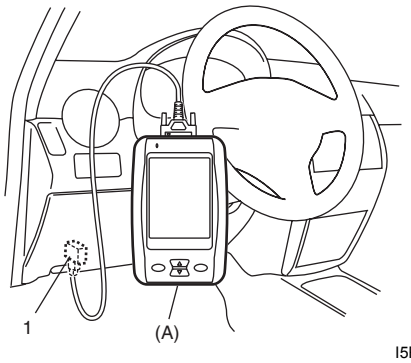

I5RW0C510072-01

3) Turn ignition switch ON.
4) Read DTC, pending DTC and freeze frame data according to instructions displayed on scan tool and print it down. Refer to scan tool operator’s manual for further details.
   If communication between scan tool and TCM is not possible, check if scan tool is communicable by connecting it to TCM in another vehicle. If communication is possible in this case, scan tool is in good condition. Then check data link connector and serial data line (circuit) in the vehicle with which communication was not possible.
5) After completing the check, turn ignition switch off and disconnect scan tool from data link connector.

DTC Clearance

S7RW0A5104007

After repair or replace malfunction part(s), clear all DTCs by performing the following procedure.

1) Connect SUZUKI scan tool to data link connector in the same manner as when making this connection for “DTC Check”.
2) Turn ignition switch ON.
3) Erase DTC and pending DTC according to instructions displayed on scan tool. Refer to scan tool operator’s manual for further details.
4) After completing the clearance, turn ignition switch OFF and disconnect scan tool from data link connector (DLC).

NOTE

DTC and freeze frame data stored in TCM memory are also cleared in the following cases. Be careful not to clear them before keeping their record.

- **When the same malfunction (DTC) is not detected again during 40 engine warm-up cycles.**

Fail-Safe Table

S7RW0A5104008

This function is provided by the safe mechanism that assures safe driveability even when the solenoid valve, sensor or its circuit fails. The following table shows the fail-safe function for each fail condition of sensor, solenoid or its circuit.

DTC No.	Trouble area	Fail-safe operation
☞ P0705	Transmission range sensor circuit malfunction (PRNDL input)	• Selected range is set in priority order shown below. D> 2> L> R> N> P • Slip controlled lock-up function is inhibited to operate. • Learning control is inhibited.
☞ P0707	Transmission range sensor circuit low	• Selected range is assumed to be “D” range. • Slip controlled lock-up function is inhibited to operate. • Learning control is inhibited.
☞ P0712 ☞ P0713	Transmission fluid temperature sensor circuit low	• A/T fluid temperature is assumed to be 200 °C (392 °F). • Upshifting to 4th gear is inhibited. • Lock-up function is inhibited to operate. • Garage shift control is inhibited. • Learning control is inhibited.
☞ P0717	Input / Turbine speed sensor circuit no signal	• Upshifting to 4th gear is inhibited. • Lock-up function is inhibited to operate. • Line pressure control at gear shifting is inhibited. • Torque reducing request to ECM (torque reduction control) is inhibited. • Garage shift control is inhibited. • Learning control is inhibited.
☞ P0722	Output speed sensor circuit no signal	• Vehicle speed which is calculated by input shaft speed sensor signal is used for gear shifting control instead of vehicle speed calculated by output shaft speed sensor (VSS) signal. • Upshifting to 4th gear is inhibited. • Lock-up function is inhibited to operate. • Line pressure control at gear shifting is inhibited. • Torque reducing request to ECM (torque reduction control) is inhibited. • Garage shift control is inhibited. • Learning control is inhibited.

DTC No.	Trouble area	Fail-safe operation
☞ P0787	Shift / Timing solenoid Control Circuit Low	• Power supply for all solenoid valves is cut. • Gear position is fixed in 3rd gear. • Line pressure control at gear shifting is inhibited. • Look-up function is inhibited to operate.
☞ P0788	Shift / Timing solenoid Control Circuit High	
☞ P0962	Pressure control solenoid control circuit low	
☞ P0963	Pressure control solenoid control circuit high	
☞ P0973	Shift solenoid-A (No.1) control circuit low	
☞ P0974	Shift solenoid-A (No.1) control circuit high	
☞ P0976	Shift solenoid-B (No.2) control circuit low	
☞ P0977	Shift solenoid-B (No.2) control circuit high	
☞ P0961	Pressure Control Solenoid “A” Control Circuit Range / Performance	• Upshifting to 4th gear is inhibited. • Lock-up function is inhibited to operate. • Slip controlled lock-up function is inhibited to operate. • Line pressure control at gear shifting is inhibited. • Torque reducing request to ECM (torque reduction control) is inhibited. • Garage shift control is inhibited. • Leaning control is inhibited.
☞ P1702	Internal control module memory check sum error	• Power supply for all solenoid valves is cut. • Gear position is fixed in 3rd gear. • Line pressure control at gear shifting is inhibited. • Lock-up function is inhibited to operate.
☞ P1723	Range select switch malfunction	“3” position switch is assumed to be OFF.
☞ P1878	Torque converter clutch shudder	Slip controlled lock-up function is inhibited to operate.
☞ P2762	Torque Converter Clutch (TCC) Pressure Control Solenoid Control Circuit Range / Performance	• Lock-up function is inhibited to operate. • Slip controlled lock-up function is inhibited to operate. • Upshifting to 4th gear is inhibited when Transmission Fluid Temperature is 150 °C (302 °F) or more. • Gear position is fixed in 1st gear when vehicle speed is 10 km/h (6 mile/h) or less.
☞ P2763	Torque converter clutch pressure control solenoid control circuit high	• Lock-up function is inhibited to operate. • Upshifting to 4th gear is inhibited when A/T fluid temperature is more than 150 °C (302 °F). • Vehicle speed is slower than 10 km/h (6 mile/h), gear position is fixed in 1st gear for prevention of engine stall.
☞ P2764	Torque converter clutch pressure control solenoid control circuit low	• Lock-up function is inhibited to operate. • Upshifting to 4th gear is inhibited when A/T fluid temperature is more than 150 °C (302 °F).
☞ U0073	Control module communication bus off	• Throttle opening used for line pressure control is assumed to be 100%. • Throttle opening used for gear shifting control is assumed to be 0%. • Engine revolution is assumed to be 0 RPM. • After 15 minutes pass from detecting malfunction, engine coolant temperature is assumed to be 90 °C (194 °F). • Lock-up function is inhibited to operate. • Line pressure control at gear shifting is inhibited. • Torque reducing request to ECM (torque reduction control) is inhibited. • Upshifting to 4th gear is inhibited. • Garage shift control is inhibited. • Learning control is inhibited.

DTC No.	Trouble area	Fail-safe operation
☞ U0100	TCM lost communication with ECM (Reception error)	• Throttle opening used for line pressure control is assumed to be 100%. • Throttle opening used for gear shifting control is assumed to be 0%. • Engine revolution is assumed to be 0 RPM. • After 15 minutes pass from detecting malfunction, engine coolant temperature is assumed to be 90 °C (194 °F). • Lock-up function is inhibited to operate. • Slip controlled lock-up function is inhibited to operate. • Line pressure control at gear shifting is inhibited. • Torque reducing request to ECM (torque reduction control) is inhibited. • Upshifting to 4th gear is inhibited. • Garage shift control is inhibited. • Learning control is inhibited.

Scan Tool Data

S7RW0A5104009

As the data values given in the following table are standard values estimated on the basis of values obtained from the normally operating vehicles by using a scan tool, use them as reference values. Even when the vehicle is in good condition, there may be cases where the checked value does not fall within each specified data range. Therefore, judgment as abnormal should not be made by checking with these data alone.
Also, condition in the following table that can be checked by the scan tool are those detected by TCM and output from TCM as commands and there may be cases where the automatic transaxle or actuator is not operating (in the condition) as indicated by the scan tool.

NOTE

The following scan tool data related to automatic transaxle can be checked only by communicating with TCM.

Scan tool data	Vehicle condition		Normal condition / reference values
☞ GEAR POSITION	Ignition switch ON	Select lever is in “P” position	P or N
		Select lever is in “R” position	R
		Select lever is in “N” position	P or N
		Select lever is in “D” position	1
		Select lever is in “3” position	1
		Select lever is in “2” position	1
		Select lever is in “L” position	1
☞ ENGINE SPEED	At engine idle speed		Engine idle speed is displayed
☞ INPUT SHAFT REVOLUTION	Ignition switch ON and engine stop		0 RPM
	At 60 km/h (37.5 mile/h) constant speed, 20% or less throttle opening and 3rd gear (“3” range)		Approx. 2300 RPM
☞ OUTPUT SHAFT REVOLUTION	At vehicle stop		0 RPM
	At 60 km/h (37.5 mile/h) constant speed, 20% or less throttle opening and 3rd gear (“3” range)		Approx. 2300 RPM
☞ BATTERY VOLTAGE	Ignition switch ON and engine stop		Battery voltage is displayed (8 – 16 V)
☞ ATF TEMPERATURE	After driving at 60 km/h (37.5 mile/h) for 15 minutes or more, and A/T fluid temperature around sensor reaches 70 – 80 °C (158 – 176 °F)		70 – 80 °C (158 – 176 °F)
☞ SHIFT SOLENOID-A COMMAND	At vehicle stop		ON
	At 60 km/h (37.5 mile/h) constant speed, 20% or less throttle opening and 3rd gear (“3” range)		OFF
☞ SHIFT SOLENOID-A MONITOR	At vehicle stop		ON
	At 60 km/h (37.5 mile/h) constant speed, 20% or less throttle opening and 3rd gear (“3” range)		OFF

Scan tool data	Vehicle condition		Normal condition / reference values
☞ SHIFT SOLENOID-B COMMAND	At vehicle stop		ON
	At 60 km/h (37.5 mile/h) constant speed, 20% or less throttle opening and 3rd gear (“3” range)		OFF
☞ SHIFT SOLENOID-B MONITOR	At vehicle stop		ON
	At 60 km/h (37.5 mile/h) constant speed, 20% or less throttle opening and 3rd gear (“3” range)		OFF
☞ TIMING SOLENOID COMMAND	Ignition switch ON and select lever is in “N” range		OFF
	For about 0.5 sec. while on gear shifting between 3rd and 4th or gear shifting “N” to “D”		ON
☞ TIMING SOLENOID MONITOR	Ignition switch ON and select lever is in “N” range		OFF
	For about 0.5 sec. while on gear shifting between 3rd and 4th or gear shifting “N” to “D”		ON
☞ TCC SOLENOID	At vehicle stop, closed throttle, engine idle speed and 1st gear		0%
☞ PRESSURE CONTROL SOLENOID	At vehicle stop, closed throttle, engine idle speed and 1st gear		0%
☞ VEHICLE SPEED	At vehicle stop		0 km/h, 0 MPH
☞ “3” POSITION SWITCH	Ignition switch ON	Shift select lever to “3” or “2” range	ON
		Shift select lever to other above range	OFF
☞ TRANSAXLE RANGE	Ignition switch ON	Select lever is in “P” position	P
		Select lever is in “R” position	R
		Select lever is in “N” position	N
		Select lever is in “D” position	D
		Select lever is in “3” position	D
		Select lever is in “2” position	2
		Select lever is in “L” position	L
☞ D RANGE SIGNAL	Ignition switch ON	Select lever is in “P” position	OFF
		Select lever is in “R” position	ON
		Select lever is in “N” position	OFF
		Select lever is in “D” position	ON
		Select lever is in “3” position	ON
		Select lever is in “2” position	ON
		Select lever is in “L” position	ON
☞ THROTTLE POSITION	Ignition switch ON	Accelerator pedal is depressed	0 – 100% (Varies depending on depressed value)
		Accelerator pedal is released	0%
☞ BRAKE SWITCH	Ignition switch ON	Brake pedal is depressed	ON
		Brake pedal is released	OFF
☞ TORQUE REDUCTION SIGNAL	While on gear upshifting with 25% or more throttle opening		ON
	Under condition of not shifting gear		OFF
☞ ENGINE COOLANT TEMPERATURE	Ignition switch ON		Engine coolant temperature is displayed
☞ AIR CONDITIONER SIGNAL	Ignition switch ON and air conditioner switch OFF		OFF
☞ SLIP RPM	Engine running at idle speed and select lever is in “P” range		0 RPM
	Engine running, vehicle stop and select lever is in “D” range		Engine speed is displayed
☞ MIL REQUEST	Ignition switch ON		OFF

Scan Tool Data Definitions:

GEAR POSITION
Current gear position computed by throttle position coming from ECM and vehicle speed.

ENGINE SPEED (RPM)
Engine speed computed by reference pulses from crankshaft position sensor.

INPUT SHAFT REVOLUTION (RPM)
Input shaft revolution computed by reference pulses coming from input shaft speed sensor on transaxle case.

OUTPUT SHAFT REVOLUTION (RPM)
Output shaft revolution computed by reference pulses coming from output shaft speed sensor (VSS) on transaxle case.

BATTERY VOLTAGE (V)
Battery voltage read by TCM as analog input signal by TCM.

ATF TEMPERATURE (°C, °F)
ATF temperature decided by signal from transmission fluid temperature sensor installed on valve body.

SHIFT SOLENOID-A COMMAND
ON: ON command being outputted to shift solenoid valve-A (No.1)
OFF: ON command not being outputted to shift solenoid valve-A (No.1)

SHIFT SOLENOID-A MONITOR
ON: Electricity being passed to shift solenoid valve-A (No.1)
OFF: Electricity not being passed to shift solenoid valve-A (No.1)

SHIFT SOLENOID-B COMMAND
ON: ON command being outputted to shift solenoid valve-B (No.2)
OFF: ON command not being outputted to shift solenoid valve-B (No.2)

SHIFT SOLENOID-B MONITOR
ON: Electricity being passed to shift solenoid valve-B (No.2)
OFF: Electricity not being passed to shift solenoid valve-B (No.2)

TIMING SOLENOID COMMAND
ON: ON command being outputted to timing solenoid valve
OFF: ON command not being outputted to timing solenoid valve

TIMING SOLENOID MONITOR
ON: Electricity being passed to timing solenoid valve
OFF: Electricity not being passed to timing solenoid valve

TCC SOLENOID
Electric current value ratio between electric current value being outputted from TCM to solenoid and maximum value can be outputted by TCM.

PRESSURE CONTROL SOLENOID
Electric current value ratio between electric current value being outputted from TCM to solenoid and maximum value can be outputted by TCM.

VEHICLE SPEED (KPH/MPH)
Vehicle speed computed by reference pulse signals coming from vehicle speed sensor on transaxle case.

“3” POSITION SWITCH
Inputted signal from “3” position switch in select lever assembly.
ON: Shift select lever to “3” or “2” range
OFF: Shift select lever to other above range

TRANSAXLE RANGE
Transaxle range detected by signal fed from transmission range sensor.

D RANGE SIGNAL
ON: Signal which TCM require ECM to increase idle speed
OFF: Signal which TCM does not require ECM to increase idle speed

THROTTLE POSITION (%)
Throttle opening ratio computed by duty signal from ECM.

BRAKE SWITCH
Inputted signal from brake light switch on pedal bracket.
ON: Brake pedal depressed
OFF: Brake pedal released

TORQUE REDUCTION SIGNAL
ON: Signal which TCM require ECM to reduce output torque at shifting gear
OFF: Signal which TCM does not require ECM to reduce output torque

ENGINE COOLANT TEMPERATURE (°C, °F)
Engine coolant temperature computed by duty signal from ECM.

AIR CONDITIONER SIGNAL
ON: Signal which inform that air conditioner compressor is turned ON.
OFF: Signal which inform that air conditioner compressor is not turned ON.

SLIP RPM (RPM)
This parameter indicates slipping rotation in the torque converter (difference between input shaft rotation and engine rotation)

MIL REQUEST
ON: Signal which TCM requires combination meter to turn on malfunction indicator lamp.
OFF: Signal which TCM does not require combination meter to turn on malfunction indicator lamp.

A/T Basic Check

S7RW0A5104010

This check is important for troubleshooting when TCM has detected no DTC and no abnormality has been noted in “Visual Inspection”. Follow the flow carefully.

Step	Action	Yes	No
1	*Was “A/T System Check” preformed?*	Go to Step 2.	Go to “A/T System Check”.
2	Perform “Road Test”. *Is it OK?*	Go to Step 3.	Proceed to “Troubleshooting” in “Road Test”.
3	Perform “Manual Road Test”. *Is it OK?*	Go to Step 4.	Proceed to “Troubleshooting” in “Manual Road Test”.
4	Perform “Engine Brake Test”. *Is it OK?*	Go to Step 5.	Proceed to “Troubleshooting” in “Engine Brake Test”.
5	Perform “Stall Test”. *Is it OK?*	Go to Step 6.	Proceed to “Troubleshooting” in “Stall Test”.
6	Perform “Time Lag Test”. *Is it OK?*	Go to Step 7.	Proceed to “Troubleshooting” in “Time Lag Test”.
7	Perform “Line Pressure Test”. *Is it OK?*	Go to Step 8.	Proceed to “Troubleshooting” in “Line Pressure Test”.
8	Proceed to “Trouble Diagnosis 1” in “A/T Symptom Diagnosis”. *Is trouble identified?*	Repair or replace faulty parts.	Go to Step 9.
9	Proceed to “Trouble Diagnosis 2” in “A/T Symptom Diagnosis”. *Is trouble identified?*	Repair or replace faulty parts.	Proceed to “Trouble Diagnosis 3” in “A/T Symptom Diagnosis”.

Road Test

S7RW0A5104011

This test is to check if upshift, downshift and lock-up take place at specified speeds while actually driving vehicle on a level road.

⚠ WARNING

- **Carry out test in very little traffic area to prevent an accident.**
- **Test requires 2 persons, a driver and a tester.**

1) Warm up engine.
2) With engine running at idle, shift select lever “D” range.
3) Accelerate vehicle speed by depressing accelerator pedal gradually.
4) While driving in “D” range, check if gear shift and lock-up occur properly as shown in “A/T System Diagram”.

Troubleshooting

Condition	Possible cause	Correction / Reference Item
Unable to run in all range	Faulty valve body component	*Replace valve body assembly.*
	Faulty oil pump	*Inspect. If NG, replace.*
	Seized or broken planetary gear	*Inspect. If NG, replace.*
	Faulty one-way No.2 clutch	*Inspect. If NG, replace.*
	Faulty forward clutch	*Inspect. If NG, replace.*
	Faulty reverse clutch	*Inspect. If NG, replace.*
	Faulty 1st and reverse brake	*Inspect. If NG, replace.*
	Damaged drive plate	*Inspect. If NG, replace.*
	Faulty torque converter	*Replace.*
No gear shift as 3rd gear	Malfunction of shift solenoid valve-A and/or -B	*Inspect. If NG, replace.*
	Malfunction of timing solenoid valve	*Inspect. If NG, replace.*
	Malfunction of pressure control solenoid valve	*Inspect. If NG, replace valve body assembly.*
1 → 2 upshift fails to occur	Malfunction of shift solenoid valve-B	*Inspect. If NG, replace.*
	Malfunction of output shaft speed sensor (VSS)	*Inspect. If NG, replace.*
	Malfunction of throttle position sensor	*Inspect. If NG, replace.*
	Malfunction of transmission range sensor	*Inspect. If NG, replace.*
	Faulty valve body component	*Replace valve body assembly.*
	Faulty 2nd brake	*Inspect. If NG, replace.*
	Faulty one-way No.1 clutch	*Inspect. If NG, replace.*
2 → 3 upshift fails to occur	Malfunction of shift solenoid valve-A	*Inspect. If NG, replace.*
	Malfunction of output shaft speed sensor (VSS)	*Inspect. If NG, replace.*
	Malfunction of throttle position sensor	*Inspect. If NG, replace.*
	Malfunction of transmission range sensor	*Inspect. If NG, replace.*
	Faulty valve body component	*Replace valve body assembly.*
	Faulty direct clutch	*Inspect. If NG, replace.*
3 → 4 upshift fails to occur	Malfunction of shift solenoid valve-B	*Inspect. If NG, replace.*
	Malfunction of “3” position switch	*Inspect. If NG, replace.*
	Malfunction of engine coolant temperature sensor	*Inspect. If NG, replace.*
	Malfunction of output shaft speed sensor (VSS)	*Inspect. If NG, replace.*
	Malfunction of input shaft speed sensor	*Inspect. If NG, replace.*
	Malfunction of throttle position sensor	*Inspect. If NG, replace.*
	Malfunction of transmission range sensor	*Inspect. If NG, replace.*
	Malfunction of crankshaft position sensor	*Inspect. If NG, replace.*
	Malfunction of timing solenoid valve	*Inspect. If NG, replace.*
	Malfunction of transmission fluid temperature sensor	*Inspect. If NG, replace.*
	Malfunction of pressure control solenoid valve	*Inspect. If NG, replace valve body assembly.*
	Faulty valve body component	*Replace valve body assembly.*
	Faulty O/D and 2nd coast brake	*Inspect. If NG, replace.*
Gear shift point is incorrect	Abnormal engine condition	*Inspect and repair engine.*
	Malfunction of output shaft speed sensor (VSS)	*Inspect. If NG, replace.*
	Malfunction of throttle position sensor	*Inspect. If NG, replace.*
	Malfunction of pressure control solenoid valve	*Inspect. If NG, replace valve body assembly.*

Condition	Possible cause	Correction / Reference Item
O/D → 3 downshift fails to occur	Malfunction of shift solenoid valve-A	*Inspect. If NG, replace.*
	Malfunction of “3” position switch	*Inspect. If NG, replace.*
	Malfunction of output shaft speed sensor (VSS)	*Inspect. If NG, replace.*
	Malfunction of input shaft speed sensor	*Inspect. If NG, replace.*
	Malfunction of throttle position sensor	*Inspect. If NG, replace.*
	Malfunction of timing solenoid valve	*Inspect. If NG, replace.*
	Malfunction of pressure control solenoid valve	*Inspect. If NG, replace valve body assembly.*
	Faulty valve body component	*Replace valve body assembly.*
	Faulty forward clutch	*Inspect. If NG, replace.*
3 → 2 downshift fails to occur	Malfunction of shift solenoid valve-A	*Inspect. If NG, replace.*
	Malfunction of output shaft speed sensor (VSS)	*Inspect. If NG, replace.*
	Malfunction of throttle position sensor	*Inspect. If NG, replace.*
	Faulty valve body component	*Replace valve body assembly.*
	Faulty one-way No.1 clutch	*Inspect. If NG, replace.*
2 → 1 downshift fails to occur	Malfunction of shift solenoid valve-B	*Inspect. If NG, replace.*
	Malfunction of output shaft speed sensor (VSS)	*Inspect. If NG, replace.*
	Malfunction of throttle position sensor	*Inspect. If NG, replace.*
	Faulty valve body component	*Replace valve body assembly.*
	Faulty one-way No.2 clutch	*Inspect. If NG, replace.*
TCC (lock-up) function pressure control does not operate	Malfunction of TCC solenoid valve	*Inspect. If NG, replace.*
	Malfunction of shift solenoid valve-A and/or -B	*Inspect. If NG, replace.*
	Malfunction of brake light switch	*Inspect. If NG, replace.*
	Malfunction of engine coolant temperature sensor	*Inspect. If NG, replace.*
	Malfunction of output shaft speed sensor (VSS)	*Inspect. If NG, replace.*
	Malfunction of input shaft speed sensor	*Inspect. If NG, replace.*
	Malfunction of throttle position sensor	*Inspect. If NG, replace.*
	Malfunction of transmission range sensor	*Inspect. If NG, replace.*
	Malfunction of transmission fluid temperature sensor	*Inspect. If NG, replace.*
	Malfunction of pressure control solenoid valve	*Inspect. If NG, replace valve body assembly.*
	Faulty valve body component	*Replace valve body assembly.*
	Faulty torque converter	*Replace.*

Manual Road Test

S7RW0A5104012

⚠ WARNING

Carry out test in very little traffic area to prevent an accident.
Test requires 2 persons, a driver and a tester.

The purpose of this test is to judge whether causal factor of trouble which occurred in automatic transaxle is electrical or mechanical by disconnecting valve body harness connector (1) and fixing automatic transaxle gear position.

1) Start engine and warm it up to normal operating temperature.
2) Turn ignition switch to OFF position and disconnect valve body harness connector (1).

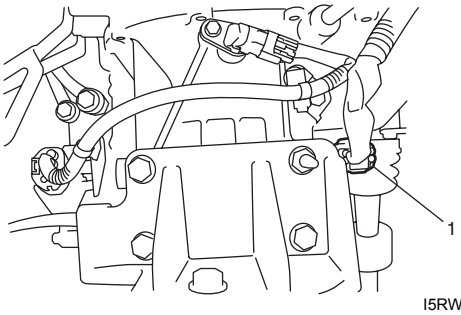

I5RW0C510010-01

3) Turn OFF all electrical loads.
   With select lever shifted to each range (“L”, “2”, “3” and “D”), drive vehicle at 1,000 rpm engine speed and then check vehicle speed by referring to “Fixed gear position”.
   If vehicle speed is not as specified in “Fixed gear position” table, go to troubleshooting.
4) Connect valve body harness connector and clear DTC.

Fixed gear position

Select lever position	Fixed gear position	Vehicle speed
L range	3rd gear	Approx. 25.0 km/h (15.5 mile/h)
2 range		
3 range		
D range		
R range	Reverse gear	Approx. 10.9 km/h (6.8 mile/h)

Troubleshooting

Condition	Possible cause	Correction / Reference Item
Operated gear is not correct	Faulty valve body component	*Replace valve body assembly.*
	Faulty clutch or brake	*Inspect clutch and brake. If any parts are faulty, replace them.*

Engine Brake Test

S7RW0A5104013

⚠ WARNING

Before test, make sure that there is no vehicle behind so as to prevent rear-end collision.

1) While driving vehicle in 3rd gear of “D” range, shift select lever down to “2” range and check if engine brake operates.
2) In the same way as in Step 1), check engine brake for operation when select lever is shifted down to “L” range.
3) Engine brake should operate in the test.

Troubleshooting

Condition	Possible cause	Correction / Reference Item
Failure to operate when shifted down to “2” range	Faulty valve body component	*Replace valve body assembly.*
	Faulty O/D and 2nd coast brake	*Inspect. If NG, replace.*
Failure to operate when shifted down to “L” range	Faulty valve body component	*Replace valve body assembly.*
	Faulty 1st and reverse brake	*Inspect. If NG, replace.*

Stall Test

S7RW0A5104014

This test is to check overall performance of automatic transaxle and engine by measuring stall speed at “D” and “R” ranges. Be sure to perform this test only when transaxle fluid is at normal operating temperature and its level is between FULL and LOW marks.

⚠ CAUTION

- **Do not run engine at stall more than 5 seconds continuously, or fluid temperature may rise excessively high.**
- **After performing stall test, be sure to leave engine running at idle for longer than 1 minute before another stall test.**

1) Apply parking brake and block wheels.
2) Install tachometer.
3) Start engine with select lever shifted to “P” range.
4) Depress brake pedal fully.
5) Shift select lever to “D” range and depress accelerator pedal fully while watching tachometer. Read engine rpm quickly when it has become constant (stall speed).
6) Release accelerator pedal immediately after stall speed is checked.
7) In the same way, check stall speed in “R” range.
8) Stall speed should be within the following specification.

Engine stall speed
Standard: 2,200 – 2,600 rpm

Troubleshooting

Condition	Possible cause	Correction / Reference Item
Lower than standard level in both “D” and “R” range	Engine output torque failure	*Inspect and repair engine.*
	Faulty one-way clutch of torque converter	*Replace torque converter.*
Higher than standard level in “D” range	Malfunction of pressure control solenoid valve (Low line pressure)	*Inspect. If NG, replace valve body assembly.*
	Faulty valve body component	*Replace valve body assembly.*
	Slippery forward clutch	*Inspect. If NG, replace.*
	Faulty one-way No.2 clutch	*Inspect. If NG, replace.*
	Leakage from “D” range fluid pressure circuit	*Overhaul or replace valve body assembly.*
Higher than standard level in “R” range	Malfunction of pressure control solenoid valve (Low line pressure)	*Inspect. If NG, replace valve body assembly.*
	Faulty valve body component	*Replace valve body assembly.*
	Slippery reverse clutch	*Inspect. If NG, replace.*
	Slippery 1st and reverse brake	*Inspect. If NG, replace.*
	Leakage from “R” range fluid pressure circuit	*Overhaul or replace valve body assembly.*
Higher than standard level in both “D” and “R” range	Malfunction of pressure control solenoid valve (Low line pressure)	*Inspect. If NG, replace valve body assembly.*
	Faulty valve body component	*Replace valve body assembly.*
	Clogged oil strainer	*Replace.*
	Faulty oil pump	*Inspect. If NG, replace.*
	Leakage from both “D” and “R” range fluid pressure circuit	*Overhaul or replace valve body assembly.*

Time Lag Test

S7RW0A5104015

This test is to check conditions of clutch, brake and fluid pressure. “Time lag” means time elapsed since select lever is shifted with engine idling till shock is felt.

1) With chocks placed before and behind front and rear wheels respectively, depress brake pedal.
2) Start engine.
3) With stop watch ready, shift select lever from “N” to “D” range and measure time from that moment till shock is felt.
4) Similarly measure time lag by shifting select lever from “N” to “R” range.

Gear shifting time lag
“N” → “D”: Less than 0.7 sec.
“N” → “R”: Less than 1.2 sec.

NOTE

- **When repeating this test, be sure to wait at least one minute after select lever is shifted back to “N” range.**
- **Engine should be warmed up fully for this test.**
- **Repeat test 3 times and take average of those data for final time lag data.**

Troubleshooting

Condition	Possible cause	Correction / Reference Item
“N” → “D” time lag exceeds specification	Malfunction of transmission fluid temperature sensor	*Inspect. If NG, replace.*
	Malfunction of pressure control solenoid valve (Low line pressure)	*Inspect. If NG, replace valve body assembly.*
	Faulty valve body component	*Replace valve body assembly.*
	Clogged oil strainer	*Replace.*
	Faulty oil pump	*Inspect. If NG, replace.*
	Faulty forward clutch	*Inspect. If NG, replace.*
	Faulty one-way No.2 clutch	*Inspect. If NG, replace.*
	Leakage from “D” range fluid pressure circuit	*Overhaul or replace valve body assembly.*
“N” → “R” time lag exceeds specification	Malfunction of transmission fluid temperature sensor	*Inspect. If NG, replace.*
	Malfunction of pressure control solenoid valve (Low line pressure)	*Inspect. If NG, replace valve body assembly.*
	Faulty valve body component	*Replace valve body assembly.*
	Clogged oil strainer	*Replace.*
	Faulty oil pump	*Inspect. If NG, replace.*
	Faulty reverse clutch	*Inspect. If NG, replace.*
	Faulty 1st and reverse brake	*Inspect. If NG, replace.*
	Leakage from “R” range fluid pressure circuit	*Overhaul or replace valve body assembly.*

Line Pressure Test

S7RW0A5104016

Purpose of this test is to check operating conditions of each part by measuring fluid pressure in fluid pressure line. Line pressure test requires the following conditions.

- Automatic fluid is at normal operating temperature (70 – 80 °C / 158 – 176 °F).
- Fluid is replenished to proper level (between FULL and LOW on dipstick).
- Air conditioner switch is turned OFF.

1) Apply parking brake securely and place chocks against wheels.
2) Remove fluid pressure check hole plug bolt.
3) Attach oil pressure gauge to fluid pressure check hole in transaxle case.

Special tool
(A): 09925–37811–001

⚠ CAUTION

After attaching oil pressure gauge, check that no fluid leakage exists.

4) Depress foot brake fully, run engine at idle and stall then check fluid pressure in “D” or “R” range.

⚠ CAUTION

- **Do not continue running engine at stall speed longer than 5 seconds.**
- **After performing line pressure test, be sure to leave engine running at idle for longer than one minute before performing another line pressure test.**

Automatic transaxle line pressure

	“D” range	**“R” range**
At idle speed	**3.7 – 4.1 kg/cm², 53 – 58psi**	**5.9 – 6.8 kg/cm², 84 – 97 psi**
At stall speed	**12.5 – 13.7 kg/cm², 178 – 195 psi**	**16.5 – 19.0 kg/cm², 235 – 270 psi**

Troubleshooting

Condition	Possible cause	Correction / Reference Item
Higher than standard level in each range	Malfunction of pressure control solenoid valve (Low line pressure)	*Inspect. If NG, replace valve body assembly.*
	Faulty valve body component	*Replace valve body assembly.*
Lower than standard level in each range	Malfunction of pressure control solenoid valve (Low line pressure)	*Inspect. If NG, replace valve body assembly.*
	Faulty valve body component	*Replace valve body assembly.*
	Clogged oil strainer	*Replace.*
	Faulty oil pump	*Inspect. If NG, replace.*
	Leakage from both “D” and “R” range fluid pressure circuit	*Overhaul or replace valve body assembly.*
Lower than standard level only in “D” range	Leakage from “D” range fluid pressure circuit	*Overhaul or replace valve body assembly.*
Lower than standard level only in “R” range	Leakage from “R” range fluid pressure circuit	*Overhaul or replace valve body assembly.*

"P" Range Test

S7RW0A5104017

1) Stop vehicle on a slope of 5 degrees or more, shift select lever to "P" range and at the same time apply parking brake.
2) After stopping engine, depress brake pedal and release parking brake.
3) Then, release brake pedal gradually and check that vehicle remains stationary.
4) Depress brake pedal and shift select lever to "N" range.
5) Then, release brake pedal gradually and check that vehicle moves.

⚠ WARNING

Before test, make sure no one is around vehicle or down on a slope and keep watchful for safety during test.

Troubleshooting

Condition	Possible cause	Correction / Reference Item
Vehicle moves at "P" range or remains stationary at "N" range	Defective parking lock pawl or spring	*Inspect. If NG, repair.*

A/T Symptom Diagnosis

S7RW0A5104018

Trouble Diagnosis 1
Electrical repair

Condition	Possible cause	Correction / Reference Item
Excessive shift shock	Shift solenoid valve-A and/or -B circuit faulty	*Inspect circuit for open, short and intermittent. If NG, repair.*
	Pressure control solenoid valve circuit faulty	*Inspect circuit for open, short and intermittent. If NG, repair.*
	Timing solenoid valve circuit faulty only when N → D or 3 ↔ 4 shifting	*Inspect circuit for open, short and intermittent. If NG, repair.*
	Output shaft speed sensor (VSS) circuit faulty	*Inspect circuit for open, short and intermittent. If NG, repair.*
	Input shaft speed sensor circuit faulty	*Inspect circuit for open, short and intermittent. If NG, repair.*
	Transmission fluid temperature sensor circuit faulty	*Inspect circuit for open, short and intermittent. If NG, repair.*
	CAN communication circuit faulty	*Inspect circuit for open, short and intermittent. If NG, repair.*
	Throttle position sensor circuit faulty	*Inspect circuit for open, short and intermittent referring to "DTC P0122: Throttle Position Sensor (Main) Circuit Low in Section 1A" and/or "DTC P0123: Throttle Position Sensor (Main) Circuit High in Section 1A". If NG, repair.*
	Crankshaft position sensor circuit faulty	*Inspect circuit for open, short and intermittent referring to "DTC P0335: Crankshaft Position (CKP) Sensor Circuit in Section 1A". If NG, repair.*
	TCM	*Substitute a known-good TCM and recheck.*
	ECM	*Substitute a known-good ECM and recheck.*
No gear shift as 3rd gear	Shift solenoid valve-A and/or -B circuit faulty	*Inspect circuit for open, short and intermittent. If NG, repair.*
	Pressure control solenoid valve circuit faulty	*Inspect circuit for open, short and intermittent. If NG, repair.*
	Timing solenoid valve circuit faulty	*Inspect circuit for open, short and intermittent. If NG, repair.*
	TCM	*Substitute a known-good TCM and recheck.*

Condition	Possible cause	Correction / Reference Item
Poor 1 → 2 shift	Shift solenoid valve-B circuit faulty	*Inspect circuit for open, short and intermittent. If NG, repair.*
	Output shaft speed sensor (VSS) circuit faulty	*Inspect circuit for open, short and intermittent. If NG, repair.*
	Transmission range sensor circuit faulty	*Inspect circuit for open, short and intermittent. If NG, repair.*
	CAN communication circuit faulty	*Inspect circuit for open, short and intermittent. If NG, repair.*
	Throttle position sensor circuit faulty	*Inspect circuit for open, short and intermittent referring to "DTC P0122: Throttle Position Sensor (Main) Circuit Low in Section 1A" and/or "DTC P0123: Throttle Position Sensor (Main) Circuit High in Section 1A". If NG, repair.*
	TCM	*Substitute a known-good TCM and recheck.*
	ECM	*Substitute a known-good ECM and recheck.*
Poor 2 → 3 shift	Shift solenoid valve-A circuit faulty	*Inspect circuit for open, short and intermittent. If NG, repair.*
	Output shaft speed sensor (VSS) circuit faulty	*Inspect circuit for open, short and intermittent. If NG, repair.*
	Transmission range sensor circuit faulty	*Inspect circuit for open, short and intermittent. If NG, repair.*
	CAN communication circuit faulty	*Inspect circuit for open, short and intermittent. If NG, repair.*
	Throttle position sensor circuit faulty	*Inspect circuit for open, short and intermittent referring to "DTC P0122: Throttle Position Sensor (Main) Circuit Low in Section 1A" and/or "DTC P0123: Throttle Position Sensor (Main) Circuit High in Section 1A". If NG, repair.*
	TCM	*Substitute a known-good TCM and recheck.*
	ECM	*Substitute a known-good ECM and recheck.*

Condition	Possible cause	Correction / Reference Item
Poor 3 → 4 shift	Shift solenoid valve-B circuit faulty	*Inspect circuit for open, short and intermittent. If NG, repair.*
	Pressure control solenoid valve circuit faulty	*Inspect circuit for open, short and intermittent. If NG, repair.*
	Timing solenoid valve circuit faulty	*Inspect circuit for open, short and intermittent. If NG, repair.*
	Output shaft speed sensor (VSS) circuit faulty	*Inspect circuit for open, short and intermittent. If NG, repair.*
	Input shaft speed sensor circuit faulty	*Inspect circuit for open, short and intermittent. If NG, repair.*
	Transmission range sensor circuit faulty	*Inspect circuit for open, short and intermittent. If NG, repair.*
	Transmission fluid temperature sensor circuit faulty	*Inspect circuit for open, short and intermittent. If NG, repair.*
	CAN communication circuit faulty	*Inspect circuit for open, short and intermittent. If NG, repair.*
	Throttle position sensor circuit faulty	*Inspect circuit for open, short and intermittent referring to "DTC P0122: Throttle Position Sensor (Main) Circuit Low in Section 1A" and/or "DTC P0123: Throttle Position Sensor (Main) Circuit High in Section 1A". If NG, repair.*
	Engine coolant temperature sensor circuit faulty	*Inspect circuit for open, short and intermittent referring to "DTC P0117: Engine Coolant Temperature Circuit Low in Section 1A" and/or "DTC P0118: Engine Coolant Temperature Circuit High in Section 1A". If NG, repair.*
	Crankshaft position sensor circuit faulty	*Inspect circuit for open, short and intermittent referring to "DTC P0335: Crankshaft Position (CKP) Sensor Circuit in Section 1A". If NG, repair.*
	"3" position switch circuit faulty	*Inspect. If NG, repair.*
	TCM	*Substitute a known-good TCM and recheck.*
	ECM	*Substitute a known-good ECM and recheck.*
Poor 4 → 3 shift	Shift solenoid valve-B circuit faulty	*Inspect circuit for open, short and intermittent. If NG, repair.*
	Pressure control solenoid valve circuit faulty	*Inspect circuit for open, short and intermittent. If NG, repair.*
	Timing solenoid valve circuit faulty	*Inspect circuit for open, short and intermittent. If NG, repair.*
	Output shaft speed sensor (VSS) circuit faulty	*Inspect circuit for open, short and intermittent. If NG, repair.*
	Input shaft speed sensor circuit faulty	*Inspect circuit for open, short and intermittent. If NG, repair.*
	CAN communication circuit faulty	*Inspect circuit for open, short and intermittent. If NG, repair.*
	Throttle position sensor circuit faulty	*Inspect circuit for open, short and intermittent referring to "DTC P0122: Throttle Position Sensor (Main) Circuit Low in Section 1A" and/or "DTC P0123: Throttle Position Sensor (Main) Circuit High in Section 1A". If NG, repair.*
	"3" position switch circuit faulty	*Inspect. If NG, repair.*
	TCM	*Substitute a known-good TCM and recheck.*
	ECM	*Substitute a known-good ECM and recheck.*

Condition	Possible cause	Correction / Reference Item
Poor 3 → 2 shift	Shift solenoid valve-A circuit faulty	*Inspect circuit for open, short and intermittent. If NG, repair.*
	Output shaft speed sensor (VSS) circuit faulty	*Inspect circuit for open, short and intermittent. If NG, repair.*
	CAN communication circuit faulty	*Inspect circuit for open, short and intermittent. If NG, repair.*
	Throttle position sensor circuit faulty	*Inspect circuit for open, short and intermittent referring to "DTC P0122: Throttle Position Sensor (Main) Circuit Low in Section 1A" and/ or "DTC P0123: Throttle Position Sensor (Main) Circuit High in Section 1A". If NG, repair.*
	TCM	*Substitute a known-good TCM and recheck.*
	ECM	*Substitute a known-good ECM and recheck.*
Poor 2 → 1 shift	Shift solenoid valve-A circuit faulty	*Inspect circuit for open, short and intermittent. If NG, repair.*
	Output shaft speed sensor (VSS) circuit faulty	*Inspect circuit for open, short and intermittent. If NG, repair.*
	CAN communication circuit faulty	*Inspect circuit for open, short and intermittent. If NG, repair.*
	Throttle position sensor circuit faulty	*Inspect circuit for open, short and intermittent referring to "DTC P0122: Throttle Position Sensor (Main) Circuit Low in Section 1A" and/ or "DTC P0123: Throttle Position Sensor (Main) Circuit High in Section 1A". If NG, repair.*
	TCM	*Substitute a known-good TCM and recheck.*
	ECM	*Substitute a known-good ECM and recheck.*
Incorrect gear shift point	Output shaft speed sensor (VSS) circuit faulty	*Inspect circuit for open, short and intermittent. If NG, repair.*
	Pressure control solenoid valve circuit faulty	*Inspect circuit for open, short and intermittent. If NG, repair.*
	CAN communication circuit faulty	*Inspect circuit for open, short and intermittent. If NG, repair.*
	Throttle position sensor circuit faulty	*Inspect circuit for open, short and intermittent referring to "DTC P0122: Throttle Position Sensor (Main) Circuit Low in Section 1A" and/ or "DTC P0123: Throttle Position Sensor (Main) Circuit High in Section 1A". If NG, repair.*
	TCM	*Substitute a known-good TCM and recheck.*
	ECM	*Substitute a known-good ECM and recheck.*

Condition	Possible cause	Correction / Reference Item
Non operate TCC (lock-up) system	TCC solenoid valve circuit faulty	*Inspect circuit for open, short and intermittent. If NG, repair.*
	Shift solenoid valve-A and/or-B circuit faulty	*Inspect circuit for open, short and intermittent. If NG, repair.*
	Pressure control solenoid valve circuit faulty	*Inspect circuit for open, short and intermittent. If NG, repair.*
	Output shaft speed sensor (VSS) circuit faulty	*Inspect circuit for open, short and intermittent. If NG, repair.*
	Input shaft speed sensor circuit faulty	*Inspect circuit for open, short and intermittent. If NG, repair.*
	Transmission range sensor circuit faulty	*Inspect circuit for open, short and intermittent. If NG, repair.*
	Transmission fluid temperature sensor circuit faulty	*Inspect circuit for open, short and intermittent. If NG, repair.*
	CAN communication circuit faulty	*Inspect circuit for open, short and intermittent. If NG, repair.*
	Throttle position sensor circuit faulty	*Inspect circuit for open, short and intermittent referring to "DTC P0122: Throttle Position Sensor (Main) Circuit Low in Section 1A" and/or "DTC P0123: Throttle Position Sensor (Main) Circuit High in Section 1A". If NG, repair.*
	Engine coolant temperature sensor circuit faulty	*Inspect circuit for open, short and intermittent referring to "DTC P0117: Engine Coolant Temperature Circuit Low in Section 1A" and/or "DTC P0118: Engine Coolant Temperature Circuit High in Section 1A". If NG, repair.*
	Brake light switch circuit faulty	*Inspect circuit for open, short and intermittent. If NG, repair.*
	TCM	*Substitute a known-good TCM and recheck.*
	ECM	*Substitute a known-good ECM and recheck.*
Higher or lower stall speed	Pressure control solenoid valve circuit faulty	*Inspect circuit for open, short and intermittent. If NG, repair.*
	TCM	*Substitute a known-good TCM and recheck.*
Excessive "N" → "D" or "N" → "R" time lag	Pressure control solenoid valve circuit faulty	*Inspect circuit for open, short and intermittent. If NG, repair.*
	Transmission fluid temperature sensor circuit faulty	*Inspect circuit for open, short and intermittent. If NG, repair.*
	TCM	*Substitute a known-good TCM and recheck.*
Higher or lower line pressure	Pressure control solenoid valve circuit faulty	*Inspect circuit for open, short and intermittent. If NG, repair.*
	TCM	*Substitute a known-good TCM and recheck.*

Trouble Diagnosis 2
On-vehicle repair

Condition	Possible cause	Correction / Reference Item
Unable to run in all range	Faulty valve body component	*Replace valve body assembly.*
Excessive shift shock	Engine abnormal condition	*Inspect and repair engine.*
	Malfunction of shift solenoid valve-A and/or -B	*Inspect. If NG, replace.*
	Malfunction of output shaft speed sensor (VSS)	*Inspect. If NG, replace.*
	Malfunction of input shaft speed sensor	*Inspect. If NG, replace.*
	Malfunction of transmission range sensor	*Inspect. If NG, replace.*
	Malfunction of transmission fluid temperature sensor	*Inspect. If NG, replace.*
	Malfunction of timing solenoid valve only when N → D or 3 ↔ 4 shifting	*Inspect. If NG, replace.*
	Malfunction of pressure control solenoid valve	*Inspect. If NG, replace valve body assembly.*
	Malfunction of brake light switch except N → D or N → R shifting	*Inspect referring to "Brake Light Switch Inspection in Section 9B". If NG, replace.*
	Malfunction of crankshaft position sensor	*Inspect referring to "Camshaft Position (CMP) Sensor Inspection in Section 1C". If NG, replace.*
	Malfunction of Accelerator pedal position (APP) sensor	*Inspect referring to "Accelerator Pedal Position (APP) Sensor Assembly On-Vehicle Inspection in Section 1C". If NG, replace.*
	Faulty valve body component	*Replace valve body assembly.*
Poor 1 → 2 shift	Malfunction of shift solenoid valve-B	*Inspect. If NG, replace.*
	Malfunction of output shaft speed sensor (VSS)	*Inspect. If NG, replace.*
	Malfunction of transmission range sensor	*Inspect. If NG, replace.*
	Malfunction of Accelerator pedal position (APP) sensor	*Inspect referring to "Accelerator Pedal Position (APP) Sensor Assembly On-Vehicle Inspection in Section 1C". If NG, replace.*
	Faulty valve body component	*Replace valve body assembly.*
Poor 2 → 3 shift	Malfunction of shift solenoid valve-A	*Inspect. If NG, replace.*
	Malfunction of output shaft speed sensor (VSS)	*Inspect. If NG, replace.*
	Malfunction of transmission range sensor	*Inspect. If NG, replace.*
	Malfunction of Accelerator pedal position (APP) sensor	*Inspect referring to "Accelerator Pedal Position (APP) Sensor Assembly On-Vehicle Inspection in Section 1C". If NG, replace.*
	Faulty valve body component	*Replace valve body assembly.*

Condition	Possible cause	Correction / Reference Item
Poor 3 → 4 shift	Malfunction of shift solenoid valve-B	*Inspect. If NG, replace.*
	Malfunction of timing solenoid valve	*Inspect. If NG, replace.*
	Malfunction of output shaft speed sensor (VSS)	*Inspect. If NG, replace.*
	Malfunction of input shaft speed sensor	*Inspect. If NG, replace.*
	Malfunction of transmission range sensor	*Inspect. If NG, replace.*
	Malfunction of transmission fluid temperature sensor	*Inspect. If NG, replace.*
	Malfunction of “3” position switch	*Inspect. If NG, replace.*
	Malfunction of engine coolant temperature sensor	*Inspect referring to “Engine Coolant Temperature (ECT) Sensor Inspection in Section 1C”. If NG, replace.*
	Malfunction of Accelerator pedal position (APP) sensor	*Inspect referring to “Accelerator Pedal Position (APP) Sensor Assembly On-Vehicle Inspection in Section 1C”. If NG, replace.*
	Malfunction of pressure control solenoid valve	*Inspect. If NG, replace valve body assembly.*
	Faulty valve body component	*Replace valve body assembly.*
Poor 4 → 3 shift	Malfunction of shift solenoid valve-B	*Inspect. If NG, replace.*
	Malfunction of timing solenoid valve	*Inspect. If NG, replace.*
	Malfunction of output shaft speed sensor (VSS)	*Inspect. If NG, replace.*
	Malfunction of input shaft speed sensor	*Inspect. If NG, replace.*
	Malfunction of “3” position off switch	*Inspect. If NG, replace.*
	Malfunction of Accelerator pedal position (APP) sensor	*Inspect referring to “Accelerator Pedal Position (APP) Sensor Assembly On-Vehicle Inspection in Section 1C”. If NG, replace.*
	Malfunction of pressure control solenoid valve	*Inspect. If NG, replace valve body assembly.*
	Faulty valve body component	*Replace valve body assembly.*
Poor 3 → 2 shift	Malfunction of shift solenoid valve-A	*Inspect. If NG, replace.*
	Malfunction of output shaft speed sensor (VSS)	*Inspect. If NG, replace.*
	Malfunction of Accelerator pedal position (APP) sensor	*Inspect referring to “Accelerator Pedal Position (APP) Sensor Assembly On-Vehicle Inspection in Section 1C”. If NG, replace.*
	Faulty valve body component	*Replace valve body assembly.*
Poor 2 → 1 shift	Malfunction of shift solenoid valve-B	*Inspect. If NG, replace.*
	Malfunction of output shaft speed sensor (VSS)	*Inspect. If NG, replace.*
	Malfunction of Accelerator pedal position (APP) sensor	*Inspect referring to “Accelerator Pedal Position (APP) Sensor Assembly On-Vehicle Inspection in Section 1C”. If NG, replace.*
	Faulty valve body component	*Replace valve body assembly.*
Incorrect shift point	Engine abnormal condition	*Inspect and repair engine.*
	Malfunction of output shaft speed sensor (VSS)	*Inspect. If NG, replace.*
	Malfunction of Accelerator pedal position (APP) sensor	*Inspect referring to “Accelerator Pedal Position (APP) Sensor Assembly On-Vehicle Inspection in Section 1C”. If NG, replace.*

Condition	Possible cause	Correction / Reference Item
Non operate TCC (lock-up) system	Malfunction of TCC solenoid valve	*Inspect. If NG, replace.*
	Malfunction of shift solenoid valve-A and/or -B	*Inspect. If NG, replace.*
	Malfunction of output shaft speed sensor (VSS)	*Inspect. If NG, replace.*
	Malfunction of input shaft speed sensor	*Inspect. If NG, replace.*
	Malfunction of transmission range sensor	*Inspect. If NG, replace.*
	Malfunction of transmission fluid temperature sensor	*Inspect. If NG, replace.*
	Malfunction of pressure control solenoid valve	*Inspect. If NG, replace valve body assembly.*
	Malfunction of Accelerator pedal position (APP) sensor	*Inspect referring to "Accelerator Pedal Position (APP) Sensor Assembly On-Vehicle Inspection in Section 1C". If NG, replace.*
	Malfunction of engine coolant temperature sensor	*Inspect referring to "Engine Coolant Temperature (ECT) Sensor Inspection in Section 1C". If NG, replace.*
	Malfunction of brake light switch	*Inspect referring to "Brake Light Switch Inspection in Section 9B". If NG, replace.*
	Faulty valve body component	*Replace valve body assembly.*
Excessive "N" → "D" or "N" → "R" time lag	Malfunction of transmission fluid temperature sensor	*Inspect. If NG, replace.*
	Pressure control solenoid valve circuit faulty	*Inspect. If NG, replace valve body assembly.*
	Clogged oil strainer	*Replace.*
	Faulty valve body component	*Replace valve body assembly.*

Trouble Diagnosis 3
Off-vehicle repair

Condition	Possible cause	Correction / Reference Item
Unable to run in all range	Faulty oil pump	*Inspect. If NG, replace.*
	Seized or broken planetary gear	*Inspect. If NG, replace.*
	Faulty one-way No.2 clutch	*Inspect. If NG, replace.*
	Damaged drive plate	*Inspect. If NG, replace.*
	Faulty forward clutch	*Inspect. If NG, replace.*
	Faulty reverse clutch	*Inspect. If NG, replace.*
	Faulty 1st and reverse brake	*Inspect. If NG, replace.*
	Faulty torque converter	*Replace.*
Excessive "N" → "D" shift shock	Faulty forward clutch	*Inspect. If NG, replace.*
Excessive "N" → "R" shift shock	Faulty reverse clutch	*Inspect. If NG, replace.*
	Faulty 1st and reverse brake	*Inspect. If NG, replace.*
Poor 1 → 2 shift, excessive shock or slippage	Faulty 2nd brake	*Inspect. If NG, replace.*
	Faulty one-way No.1 clutch	*Inspect. If NG, replace.*
Poor 2 → 3 shift, excessive shock or slippage	Faulty direct clutch	*Inspect. If NG, replace.*
Poor 3 ↔ O/D shift, excessive shock or slippage	Faulty forward clutch	*Inspect. If NG, replace.*
	Faulty O/D and 2nd coast brake	*Inspect. If NG, replace.*
Poor 3 → 2 shift, excessive shock or slippage	Faulty direct clutch	*Inspect. If NG, replace.*
	Faulty one-way No.1 clutch	*Inspect. If NG, replace.*
Poor 2 → 1 shift, excessive shock or slippage	Faulty 2nd brake	*Inspect. If NG, replace.*
	Faulty one-way No.2 clutch	*Inspect. If NG, replace.*

Condition	Possible cause	Correction / Reference Item
Non operate TCC (lock-up) system	Faulty torque converter	*Replace.*
Excessive "N" → "D" time lag	Faulty oil pump	*Inspect. If NG, replace.*
	Faulty forward clutch	*Inspect. If NG, replace.*
	Faulty one-way No.2 clutch	*Inspect. If NG, replace.*
	Leakage from "D" range fluid pressure circuit	*Overhaul or replace valve body assembly.*
Excessive "N" → "R" time lag	Faulty oil pump	*Inspect. If NG, replace.*
	Faulty reverse clutch	*Inspect. If NG, replace.*
	Faulty 1st and reverse brake	*Inspect. If NG, replace.*
	Leakage from "R" range fluid pressure circuit	*Overhaul or replace valve body assembly.*
Poor engine brake in downshift to "2" range	Faulty O/D and 2nd coast brake	*Inspect. If NG, replace.*
Poor engine brake in downshift to "L" range	Faulty 1st and reverse brake	*Inspect. If NG, replace.*

Transmission Warning Light Circuit Check – Light Remains "ON" at Ignition Switch ON (Non-Euro-OBD Model)

S7RW0A5104019

Troubleshooting

Step	Action	Yes	No
1	**Diagnostic Trouble Code (DTC) Check** 1) Check DTC referring to "DTC Check". *Is there any DTC(s)?*	Perform DTC Flow to repair and retry.	Substitute a known-good TCM and recheck. If OK, substitute a known-good combination meter and recheck.

Transmission Warning Light Circuit Check – Light Does Not Come "ON" at Ignition Switch ON (Non-Euro-OBD Model)

S7RW0A5104020

Troubleshooting

Step	Action	Yes	No
1	**Combination Meter Power Supply Check** 1) Turn ignition switch ON. *Does other indicator / warning lights in combination meter comes ON?*	Go to Step 2.	Repair combination meter power supply circuit referring to "Combination Meter Circuit Diagram in Section 9C".
2	1) TCM power and ground circuit check referring to "TCM Power and Ground Circuit Check". *Is it in good condition?*	Go to Step 3.	Repair or replace.
3	**DTC check** 1) Check DTC referring to "DTC Check". *Is there DTC U0073 or U0100?*	Go to applicable DTC diag. flow.	Go to Step 4.
4	**Combination Meter Function Check** 1) Turn ignition switch ON. *Does A/T selector position indicator show correct select lever position?*	Replace combination meter.	Substitute a known-good TCM and recheck.

DTC P0602: Control Module Programming Error

S7RW0A5104021

System Description

Internal control module is installed in ECM.

DTC Detecting Condition and Trouble Area

DTC detecting condition	Trouble area
Data programming error (1 driving cycle detection logic)	TCM

DTC Confirmation Procedure

1) Connect scan tool to DLC with ignition switch turned OFF.
2) Turn ON ignition switch and clear DTC, pending DTC and freeze frame data by using scan tool.
3) Start engine and run it at idle if possible.
4) Check DTC and pending DTC by using scan tool.

DTC Troubleshooting

Step	Action	Yes	No
1	**DTC check** 1) Clear DTC referring to “DTC Clearance”. 2) Turn OFF ignition switch. 3) Turn ON ignition switch and check DTC. *Is DTC P0602 still indicated?*	Go to Step 2.	Intermittent trouble. Check for intermittent referring to “Intermittent and Poor Connection Inspection in Section 00”.
2	**TCM power ground circuit check** 1) Check that TCM power supply circuit and TCM ground circuit is in good condition referring to “TCM Power and Ground Circuit Check”. *Are check results OK?*	Substitute a known-good TCM and recheck.	Repair TCM power or ground circuit.

DTC P0705: Transmission Range Sensor Circuit Malfunction (PRNDL Input)

S7RW0A5104022

Wiring Diagram

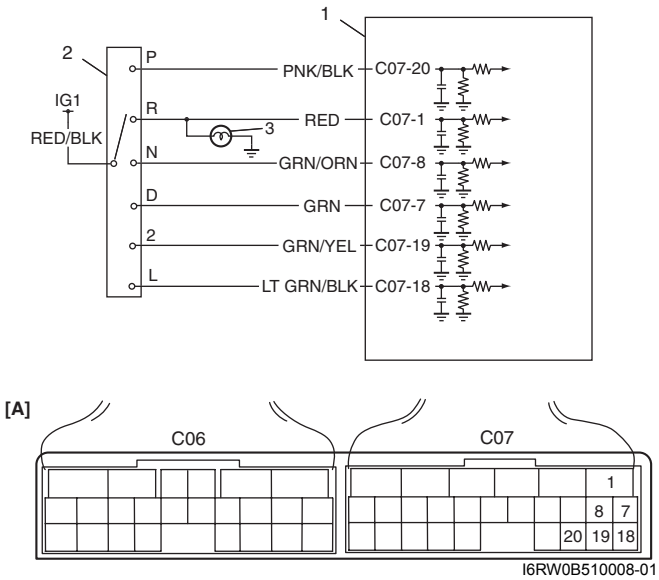

1. TCM	3. Backup lamp
2. Transmission range sensor	[A]: Terminal arrangement of TCM connector (viewed from harness side)

DTC Detecting Condition and Trouble Area

DTC detecting condition	Trouble area
Multiple or more signals are inputted simultaneously for 10 seconds.	• Select cable maladjusted • Transmission range sensor maladjusted • Transmission range sensor or its circuit malfunction • TCM

DTC Confirmation Procedure

1) Connect scan tool to DLC with ignition switch OFF.
2) Clear DTCs in TCM memory by using scan tool.
3) Start engine and shift select lever to “D” range.
4) Keep engine running at idle speed for 25 seconds or more.
5) Stop vehicle and check DTC.

DTC Troubleshooting

Step	Action	Yes	No
1	*Was “A/T System Check” performed?*	Go to Step 2.	Go to “A/T System Check”.
2	*Do you have SUZUKI scan tool?*	Go to Step 3.	Go to Step 4.
3	**Check transmission range sensor circuit for operation** Check by using SUZUKI scan tool: 1) Connect SUZUKI scan tool to DLC with ignition switch OFF. 2) Turn ignition switch ON and check transmission range signal (“P”, “R”, “N”, “D”, “2” or “L”) on display when shifting select lever to each range. *Is applicable range indicated?*	Intermittent trouble. Check for intermittent referring to “Intermittent and Poor Connection Inspection in Section 00”.	Go to Step 5.
4	**Check transmission range sensor circuit for operation** Check by not using SUZUKI scan tool: 1) Turn ignition switch ON. 2) Check voltage at terminals “C07-1”, “C07-7”, “C07-8”, “C07-18”, “C07-19” and “C07-20” respectively with select lever shifted to each range. Taking terminal “C07-19” as an example, is battery voltage indicated only when select lever is shifted to “2” range and 0 V for other ranges as shown in the following table. Check voltage at other terminals likewise, referring to the following table. *Are check results satisfactory?*	Intermittent trouble. Check for intermittent referring to “Intermittent and Poor Connection Inspection in Section 00”.	Go to Step 5.
5	1) Check select cable for adjustment referring to “Select Cable Adjustment”. *Is it adjusted correctly?*	Go to Step 6.	Adjust.
6	**Check transmission range sensor for installation position** 1) Shift select lever to “N” range. 2) Check that “N” reference line on sensor and needle direction shaped on lock washer are aligned. *Are they aligned?*	Go to Step 7.	Adjust.

Step	Action	Yes	No
7	1) Check transmission range sensor referring to “Transmission Range Sensor Inspection and Adjustment”. *Are check results satisfactory?*	“RED/BLK”, “PNK/BLK”, “RED”, “GRN/ORN”, “GRN”, “GRN/YEL” or “LT GRN/BLK” circuit shorted to power circuit or shorted each other. If wires and connections are OK, substitute a know-good TCM and recheck.	Replace transmission range sensor.

Table for Step 4

		Terminal					
		C07-20	C07-1	C07-8	C07-7	C07-19	C07-18
Select lever position	P	8 – 14 V	0 V	0 V	0 V	0 V	0 V
	R	0 V	8 – 14 V	0 V	0 V	0 V	0 V
	N	0 V	0 V	8 – 14 V	0 V	0 V	0 V
	D or 3	0 V	0 V	0 V	8 – 14 V	0 V	0 V
	2	0 V	0 V	0 V	0 V	8 – 14 V	0 V
	L	0 V	0 V	0 V	0 V	0 V	8 – 14 V

DTC P0707: Transmission Range Sensor Circuit Low

S7RW0A5104023

Wiring Diagram

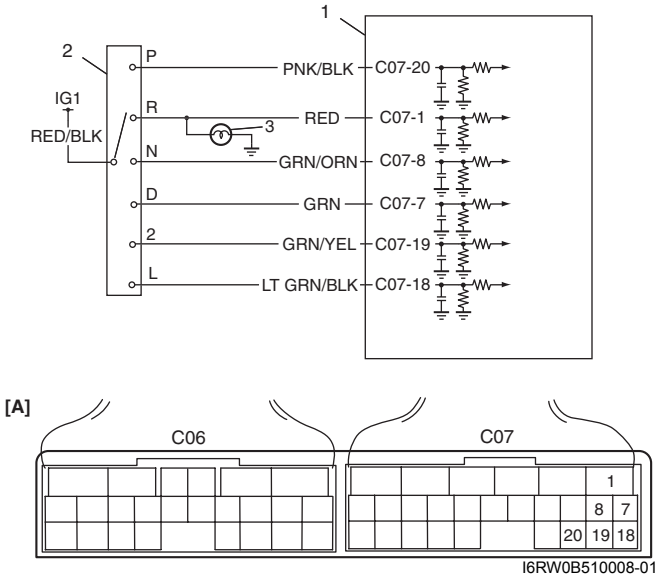

I6RW0B510008-01

1. TCM	3. Backup lamp
2. Transmission range sensor	[A]: Terminal arrangement of TCM connector (viewed from harness side)

DTC Detecting Condition and Trouble Area

DTC detecting condition	Trouble area
Transmission range switch signal (P, R, N, D, 2, or L) is not inputted for more than 28 seconds when vehicle speed is faster than 30 km/h (19 mile/h) and engine speed is faster than 1500 rpm.	• Select cable maladjusted • Transmission range sensor maladjusted • Transmission range sensor or its circuit malfunction • TCM

DTC Confirmation Procedure

⚠ WARNING

- **When performing a road test, select a place where there is no traffic or possibility of a traffic accident and be very careful during testing to avoid occurrence of an accident.**
- **Road test should be carried out with 2 persons, a driver and a tester, on a level road.**

1) Connect scan tool to DLC with ignition switch OFF.
2) Clear DTCs in TCM memory by using scan tool.
3) Start engine and shift select lever to “D” range.
4) Start vehicle and increase vehicle speed to 40 km/h (25 mile/h) or more for 1 minutes.
5) Stop vehicle and turn ignition switch OFF.
6) Repeat Step 3) to 4) one time.
7) Stop vehicle and check DTC.

DTC Troubleshooting

Step	Action	Yes	No
1	*Was “A/T System Check” performed?*	Go to Step 2.	Go to “A/T System Check”.
2	*Do you have SUZUKI scan tool?*	Go to Step 3.	Go to Step 4.
3	**Check transmission range sensor circuit for operation** Check by using SUZUKI scan tool: 1) Connect SUZUKI scan tool to DLC with ignition switch OFF. 2) Turn ignition switch ON and check transmission range signal (P, R, N, D, 2 or L) on display when shifting select lever to each range. *Is applicable range indicated?*	Intermittent trouble. Check for intermittent referring to “Intermittent and Poor Connection Inspection in Section 00”.	Go to Step 5.
4	**Check transmission range sensor circuit for operation** Check by not using SUZUKI scan tool: 1) Turn ignition switch ON. 2) Check voltage at terminals “C07-1”, “C07-7”, “C07-8”, “C07-18”, “C07-19” and “C07-20” respectively with select lever shifted to each range. Taking terminal “C07-19” as an example, is battery voltage indicated only when select lever is shifted to “2” range and 0 V for other ranges as shown in the following table. Check voltage at other terminals likewise, referring to the following table. *Are check results satisfactory?*	Intermittent trouble. Check for intermittent referring to “Intermittent and Poor Connection Inspection in Section 00”.	Go to Step 5.
5	1) Check select cable for adjustment referring to “Select Cable Adjustment”. *Is it adjusted correctly?*	Go to Step 6.	Adjust.
6	**Check transmission range sensor for installation position** 1) Shift select lever to “N” range. 2) Check that “N” reference line on sensor and needle direction shaped on lock washer are aligned. *Are they aligned?*	Go to Step 7.	Adjust.

Step	Action	Yes	No
7	1) Check transmission range sensor referring to “Transmission Range Sensor Inspection and Adjustment”. *Are check results satisfactory?*	“RED/BLK”, “PNK/BLK”, “RED”, “GRN/ORN”, “GRN”, “GRN/YEL” or “LT GRN/BLK” circuit open or short to ground. If wires and connections are OK, substitute a know-good TCM and recheck.	Replace transmission range sensor.

Table for Step 4

		Terminal					
		C07-20	C07-1	C07-8	C07-7	C07-19	C07-18
Select lever position	P	8 – 14 V	0 V	0 V	0 V	0 V	0 V
	R	0 V	8 – 14 V	0 V	0 V	0 V	0 V
	N	0 V	0 V	8 – 14 V	0 V	0 V	0 V
	D or 3	0 V	0 V	0 V	8 – 14 V	0 V	0 V
	2	0 V	0 V	0 V	0 V	8 – 14 V	0 V
	L	0 V	0 V	0 V	0 V	0 V	8 – 14 V

DTC P0711: Transmission Fluid Temperature Sensor “A” Control Range / Performance

S7RW0A5104024

Wiring Diagram

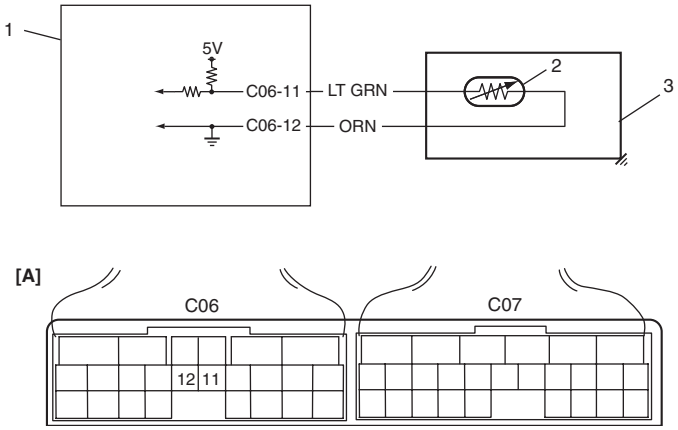

I6RW0B510009-03

1. TCM	3. A/T
2. Transmission fluid temperature sensor	[A]: Terminal arrangement of TCM connector (viewed from harness side)

DTC Detecting Condition and Trouble Area

DTC detecting condition	Trouble area
Transmission temperature sensor signal is no change and less than 20 °C (68 °F) while vehicle is running at 40 km/h (25 mile/h) or more in vehicle speed for 10 minutes or more.	• Transmission fluid temperature sensor or its circuit malfunction • TCM

DTC Confirmation Procedure

1) Connect scan tool to DLC with ignition switch OFF, if available.
2) Clear DTC in TCM memory.
3) Start engine.
4) Start vehicle and increase vehicle speed to 40 km/h (25 mile/h) for 10 minutes or more.
5) Stop vehicle and check DTC.

DTC Troubleshooting

Step	Action	Yes	No
1	*Was "A/T System Check" performed?*	Go to Step 2.	Go to "A/T System Check".
2	**Inspect transmission fluid temperature sensor** 1) Inspect transmission fluid temperature sensor referring to "Transmission Fluid Temperature Sensor Inspection". *Is result satisfactory?*	Go to Step 3	Replace transmission fluid temperature sensor.
3	**Check for transmission fluid temperature sensor circuit** 1) Turn ignition switch to OFF position. 2) Disconnect valve body harness connector and TCM connectors. 3) Check for proper connection to TCM at terminals "C06-11" and "C06-12". If connection is OK, check circuit for open, short and high resistance for the following circuit. • Between "C06-11" terminal of TCM connector and "LT GRN" terminal of valve body harness connector. • Between "C06-12" terminal of TCM connector and "ORN" terminal of valve body harness connector. *Are they in good condition?*	Intermittent trouble or faulty TCM. Check for intermittent referring to "Intermittent and Poor Connection Inspection in Section 00". If OK, substitute a known-good TCM and recheck.	Repair "LT GRN" and/or "ORN" circuit.

DTC P0712: Transmission Fluid Temperature Sensor Circuit Low

S7RW0A5104025

Wiring Diagram

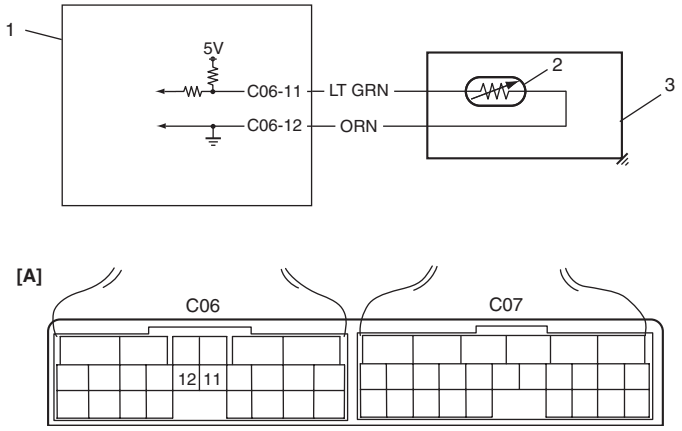

I6RW0B510009-03

1. TCM	3. A/T
2. Transmission fluid temperature sensor	[A]: Terminal arrangement of TCM connector (viewed from harness side)

DTC Detecting Condition and Trouble Area

DTC detecting condition	Trouble area
Transmission temperature sensor terminal voltage is less than specified value for 5 minutes or more after starting engine.	• Transmission fluid temperature sensor or its circuit malfunction • TCM

DTC Confirmation Procedure

⚠ WARNING

- **When performing a road test, select a place where there is no traffic or possibility of a traffic accident and be very careful during testing to avoid occurrence of an accident.**
- **Road test should be carried out with 2 persons, a driver and a tester, on a level road.**

1) Connect scan tool to DLC with ignition switch OFF, if available.
2) Clear DTC in TCM memory and start engine and keep for 20 minutes or more.
3) Stop vehicle and check DTC.

DTC Troubleshooting

Step	Action	Yes	No
1	*Was "A/T System Check" performed?*	Go to Step 2.	Go to "A/T System Check".
2	**Check transmission fluid temperature circuit for ground short** 1) Check continuity between terminal "C06-11" of disconnected harness side TCM connector and ground. *Is continuity indicated?*	"LT GRN" circuit shorted to ground.	Go to Step 3.
3	**Inspect transmission fluid temperature sensor** 1) Inspect transmission fluid temperature sensor referring to "Transmission Fluid Temperature Sensor Inspection". *Is result satisfactory?*	Intermittent trouble or faulty TCM. Check for intermittent referring to "Intermittent and Poor Connection Inspection in Section 00". If OK, substitute a known-good TCM and recheck.	Replace transmission fluid temperature sensor.

DTC P0713: Transmission Fluid Temperature Sensor Circuit High

S7RW0A5104026

Wiring Diagram

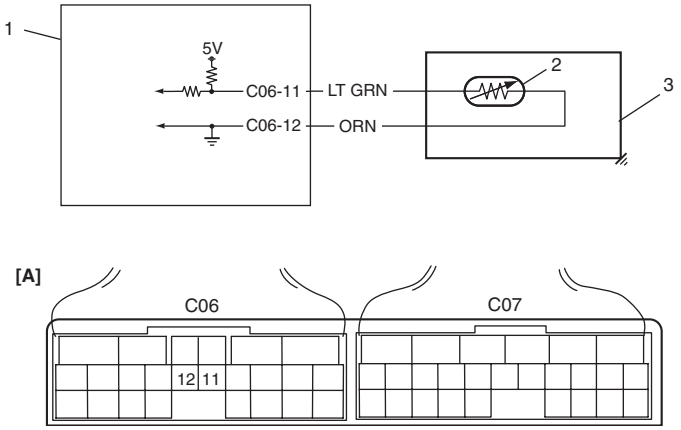

I6RW0B510009-03

1. TCM	3. A/T
2. Transmission fluid temperature sensor	[A]: Terminal arrangement of TCM connector (viewed from harness side)

DTC Detecting Condition and Trouble Area

DTC detecting condition	Trouble area
Transmission fluid temperature sensor terminal voltage is more than specified value even though engine was running in "R", "D", "3", "2" or "L" range for 12 minutes after starting engine.	• Transmission fluid temperature sensor or its circuit malfunction • TCM

DTC Confirmation Procedure

⚠ WARNING

- **When performing a road test, select a place where there is no traffic or possibility of a traffic accident and be very careful during testing to avoid occurrence of an accident.**
- **Road test should be carried out with 2 persons, a driver and a tester, on a level road.**

1) Connect scan tool to DLC with ignition switch OFF, if available.
2) Clear DTC in TCM memory and start engine.
3) Increase engine coolant temperature to about 50 °C (122 °F) and more.
4) Start vehicle and increase vehicle speed to about 20 km/h (12 mile/h) for 10 minutes or more.
5) Stop vehicle and check DTC.

DTC Troubleshooting

Step	Action	Yes	No
1	*Was "A/T System Check" performed?*	Go to Step 2.	Go to "A/T System Check".
2	**Check transmission fluid temperature circuit for open** 1) Turn ignition switch OFF. 2) Disconnect TCM connectors from TCM. 3) Check for proper connection to transmission fluid temperature sensor at terminals "C06-11" and "C06-12". 4) If OK, check continuity between terminals "C06-11" and "C06-12" of disconnected harness side TCM connector. *Is continuity indicated?*	Go to Step 3.	"LT GRN" or "ORN" circuit open.
3	**Check transmission fluid temperature circuit for IG short** 1) Cool down A/T fluid temperature under ambient temperature. 2) Connect TCM connectors to TCM with ignition switch OFF. 3) Turn ignition switch ON. 4) Measure voltage between terminal "C06-11" of TCM connector and ground. *Is it 4.6 V or more?*	"LT GRN" circuit shorted to power circuit. If circuit is OK, go to Step 4.	Intermittent trouble or faulty TCM. Check for intermittent referring to "Intermittent and Poor Connection Inspection in Section 00". If OK, substitute a known-good TCM and recheck.
4	**Inspect transmission fluid temperature sensor** 1) Inspect transmission fluid temperature sensor referring to "Transmission Fluid Temperature Sensor Inspection". *Is result satisfactory?*	Intermittent trouble or faulty TCM. Check for intermittent referring to "Intermittent and Poor Connection Inspection in Section 00". If OK, substitute a known-good TCM and recheck.	Replace transmission fluid temperature sensor.

DTC P0717: Input / Turbine Speed Sensor Circuit Malfunction

S7RW0A5104027

Wiring Diagram

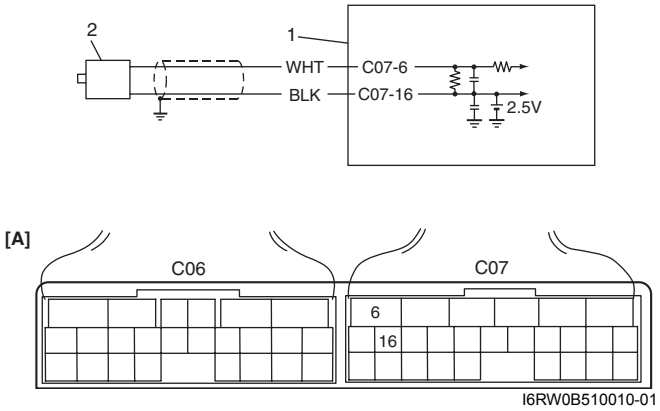

1. TCM	2. Input shaft speed sensor	[A]: Terminal arrangement of TCM connector (viewed from harness side)

DTC Detecting Condition and Trouble Area

DTC detecting condition	Trouble area
No input shaft speed sensor signal is detected although output shaft speed sensor signals are detected.	• Input shaft speed sensor or its circuit malfunction • Improper input shaft speed sensor installation • Damaged direct clutch drum • Foreign material attachment to sensor or drum • TCM

DTC Confirmation Procedure

⚠ WARNING

- **When performing a road test, select a place where there is no traffic or possibility of a traffic accident and be very careful during testing to avoid occurrence of an accident.**
- **Road test should be carried out with 2 persons, a driver and a tester, on a level road.**

1) Connect scan tool to DLC with ignition switch OFF, if available.
2) Clear DTC in TCM memory and start engine.
3) Shift select lever to “D” range and drive vehicle at 25 km/h (15 mile/h) or more with 3rd gear at least for 1 km (0.6 mile).
4) Stop vehicle and check DTC.

DTC Troubleshooting

Step	Action	Yes	No
1	*Was “A/T System Check” performed?*	Go to Step 2.	Go to “A/T System Check”.
2	**Check input shaft speed sensor circuit** 1) Disconnect TCM connectors with ignition switch OFF. 2) Check for proper connection to input shaft speed sensor at “C07-6” and “C07-16” terminals. 3) If OK, check resistance of sensor circuit. **<u>Input shaft speed sensor specification</u>** **Between terminals “C07-6” and “C07-16”: 560 – 680 Ω at 20 °C (68 °F)** **Between terminal “C07-6” / “C07-16” and ground: No continuity** *Are check result satisfactory?*	Go to Step 4.	Go to Step 3.

Step	Action	Yes	No
3	**Inspect input shaft speed sensor** 1) Inspect input shaft speed sensor referring to “Input Shaft Speed Sensor Inspection”. *Is result satisfactory?*	“WHT” or “BLK” circuit open or short.	Replace input shaft speed sensor.
4	**Check visually input shaft speed sensor and direct clutch drum for the following** • No damage • No foreign material attached • Correct installation 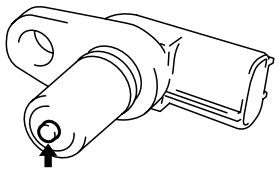 I2RH0B510020-01 *Are they in good condition?*	Intermittent trouble or faulty TCM. Check for intermittent referring to “Intermittent and Poor Connection Inspection in Section 00”. If OK, substitute a known-good TCM and recheck.	Clean, repair or replace.

DTC P0722: Output Speed Sensor (VSS) Circuit No Signal

S7RW0A5104028

Wiring Diagram

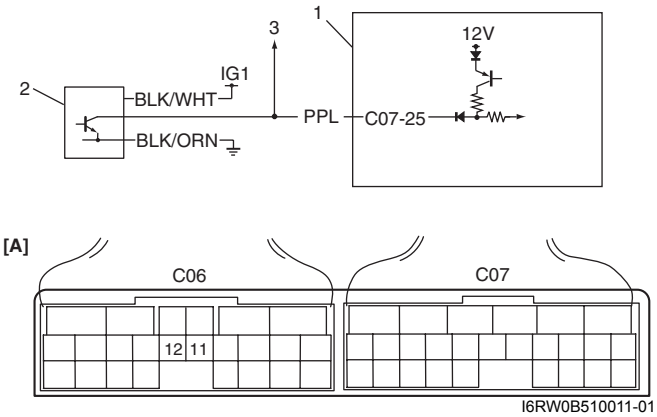

1. TCM	3. To ECM
2. Output shaft speed sensor (VSS)	[A]: Terminal arrangement of TCM connector (viewed from harness side)

DTC Detecting Condition and Trouble Area

DTC detecting condition	Trouble area
No output shaft speed sensor signal is detected although input shaft speed sensor signals are detected with “D”, “2” or “L” range.	• Output shaft speed sensor or its circuit malfunction • Damaged sensor gear (driven gear) • Damaged output shaft speed sensor (VSS) drive gear • TCM

DTC Confirmation Procedure

⚠ WARNING

- **When performing a road test, select a place where there is no traffic or possibility of a traffic accident and be very careful during testing to avoid occurrence of an accident.**
- **Road test should be carried out with 2 persons, a driver and a tester, on a level road.**

1) Connect scan tool to DLC with ignition switch OFF, if available.
2) Clear DTC in TCM memory and start engine.
3) Shift select lever to “D” range and drive vehicle at 9 km/h (6 mile/h) or more vehicle speed at least for 1 km (0.6 mile).
4) Stop vehicle and check DTC.

DTC Troubleshooting

Step	Action	Yes	No
1	*Was “A/T System Check” performed?*	Go to Step 2.	Go to “A/T System Check”.
2	**Check output shaft speed sensor (VSS) power circuit** 1) Turn ignition switch OFF. 2) Disconnect output shaft speed sensor connector. 3) Turn ignition switch ON. 4) Measure voltage between “BLK/WHT” wire terminal of disconnected output shaft speed sensor harness side connector and ground. *Is it 10 – 14 V?*	Go to Step 3.	“BLK/WHT” wire open or shorted to ground.
3	**Check output shaft speed sensor (VSS) ground circuit** 1) Turn ignition switch OFF. 2) Check continuity between “BLK/ORN” wire terminal of disconnected output shaft speed sensor harness side connector and ground. *Is continuity indicated?*	Go to Step 4.	“BLK/ORN” wire open.
4	**Check output shaft speed sensor (VSS) signal circuit for short** 1) Disconnect TCM connectors. 2) Check continuity between “PPL” wire terminal of disconnected output shaft speed sensor harness side connector and ground. *Is continuity indicated?*	“PPL” wire shorted to ground.	Go to Step 5.
5	**Check output shaft speed sensor (VSS) signal circuit for open** 1) Check continuity between “PPL” wire terminal of disconnected output shaft speed sensor harness side connector and terminal “C07-25” of disconnected harness side TCM connector. *Is continuity indicated?*	Go to Step 6.	“PPL” wire open.
6	**Inspect output shaft speed sensor (VSS)** 1) Inspect output shaft speed sensor referring to “Output Shaft Speed Sensor (VSS) Inspection”. *Is check result satisfactory?*	Go to Step 7.	Replace output shaft speed sensor (VSS).

Step	Action	Yes	No
7	**Check output shaft speed sensor (VSS) gears visually** 1) Check output shaft speed sensor gears for the followings. • No damage in drive gear on differential case • No damage in driven gear in output shaft speed sensor *Is result satisfactory?*	Intermittent trouble or faulty TCM. Check for intermittent referring to “Intermittent and Poor Connection Inspection in Section 00”. If OK, substitute a known-good TCM and recheck.	Replace drive gear and/ or driven gear of output shaft speed sensor.

DTC P0741 / P0742: TCC Circuit Performance or Stuck OFF / TCC Circuit Stuck ON

S7RW0A5104029

DTC Detecting Condition and Trouble Area

DTC P0741

DTC detecting condition	Trouble area
When driving vehicle with 3rd or 4th gear in “D” range, difference in revolution between engine and A/T input (input shaft speed) is larger than specification although TCM commanded TCC solenoid valve to turn ON.	• Mechanical malfunction of TCC solenoid valve • Malfunction of valve body assembly • Fluid passage clogged or leaking • Torque converter clutch malfunction

DTC P0742

DTC detecting condition	Trouble area
When driving vehicle with 2nd, 3rd or 4th gear in “D” range, difference in revolution between engine and A/T input (input shaft speed) is smaller than specification although TCM commanded TCC solenoid valve to turn OFF.	• Mechanical malfunction of TCC solenoid valve • Malfunction of valve body assembly • Fluid passage clogged or leaking • Torque converter clutch malfunction

DTC Confirmation Procedure

⚠ WARNING

- **When performing a road test, select a place where there is no traffic or possibility of a traffic accident and be very careful during testing to avoid occurrence of an accident.**
- **Road test should be carried out with 2 persons, a driver and a tester, on a level road.**

1) Connect scan tool to DLC with ignition switch OFF, if available.
2) Clear DTC in TCM memory.
3) Start engine and warm it up to normal operating temperature.
4) Shift select lever to “N” and “D” range for each 10 seconds.
5) Drive vehicle with 3rd or 4th gear in “D” range and lock-up ON for 2 seconds or longer referring to “A/T System Diagram”.
6) Shift select lever to “3” range.
7) Drive vehicle with 2nd or 3rd gear in “3” range, 15 – 30% throttle opening and at vehicle speed of 25 – 40 km/h (16 – 25 mile/h) at least for 1 second.
8) Stop vehicle and turn ignition switch OFF.
9) Repeat Step 3) to 7) one time.
10) Stop vehicle and check DTC.

DTC Troubleshooting

Step	Action	Yes	No
1	*Was "A/T System Check" performed?*	Go to Step 2.	Go to "A/T System Check".
2	1) Check TCC solenoid valve for operation referring to "Solenoid Valves (Shift Solenoid Valves and Timing Solenoid Valve) Inspection". *Are they in good condition?*	Clean fluid passage or replace valve body assembly.	Replace TCC solenoid valve.

DTC P0751 / P0752 / P0756 / P0757: Shift Solenoid Malfunction

S7RW0A5104030

DTC P0751: Shift Solenoid-A (No.1) Performance or Stuck OFF
DTC P0752: Shift Solenoid-A (No.1) Stuck ON
DTC P0756: Shift Solenoid-B (No.2) Performance or Stuck OFF
DTC P0757: Shift Solenoid-B (No.2) Stuck ON

DTC Detecting Condition and Trouble Area

DTC P0751

DTC detecting condition	Trouble area
3rd gear ratio is detected although TCM command is for 2nd gear while vehicle running at 20 km/h (12 mile/h) or more in "D" range after engine being warmed up.	• Mechanical malfunction of shift solenoid valve-A (No.1) • Malfunction of valve body assembly • Fluid passage clogged or leaking • Mechanical malfunction of automatic transaxle (clutch, brake or gear etc.)

DTC P0752

DTC detecting condition	Trouble area
2nd gear ratio is detected although TCM command is for 3rd gear while vehicle running at 20 km/h (12 mile/h) or more in "D" range after engine being warmed up.	• Mechanical malfunction of shift solenoid valve-A (No.1) • Malfunction of valve body assembly • Fluid passage clogged or leaking • Mechanical malfunction of automatic transaxle (clutch, brake or gear etc.)

DTC P0756

DTC detecting condition	Trouble area
3rd gear ratio is detected although TCM command is for 4th gear while vehicle running at 20 km/h (12 mile/h) or more in "D" range after engine being warmed up.	• Mechanical malfunction of shift solenoid valve-B (No.2) • Malfunction of valve body assembly • Fluid passage clogged or leaking • Mechanical malfunction of automatic transaxle (clutch, brake or gear etc.)

DTC P0757

DTC detecting condition	Trouble area
4th gear ratio is detected although TCM command is for 3rd gear while vehicle running at 20 km/h (12 mile/h) or more in "D" range after engine being warmed up.	• Mechanical malfunction of shift solenoid valve-B (No.2) • Malfunction of valve body assembly • Fluid passage clogged or leaking • Mechanical malfunction of automatic transaxle (clutch, brake or gear etc.)

DTC Confirmation Procedure

⚠ WARNING

- **When performing a road test, select a place where there is no traffic or possibility of a traffic accident and be very careful during testing to avoid occurrence of an accident.**
- **Road test should be carried out with 2 persons, a driver and a tester, on a level road.**

1) Connect scan tool to DLC with ignition switch OFF, if available.
2) Clear DTC in TCM memory.
3) Start engine and warm it up to normal operating temperature.
4) Shift select lever to “N” and “D” range for 10 seconds.
5) Start vehicle and increase vehicle speed to 65 km/h (40 mile/h) with throttle position 10% or more.
6) Stop vehicle and turn ignition switch OFF.
7) Repeat Step 3) to 5) one time.
8) Stop vehicle and check DTC.

DTC Troubleshooting

Step	Action	Yes	No
1	*Was “A/T System Check” performed?*	Go to Step 2.	Go to “A/T System Check”.
2	1) Check shift solenoid valve-A (No.1) or -B (No.2) for operation referring to “Solenoid Valves (Shift Solenoid Valves and Timing Solenoid Valve) Inspection”. *Are they in good condition?*	Clean fluid passage or replace valve body assembly.	Replace shift solenoid valve-A or -B.

DTC P0787: Shift / Timing Solenoid Control Circuit Low

S7RW0A5104031

Wiring Diagram

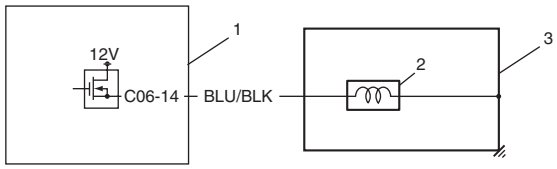

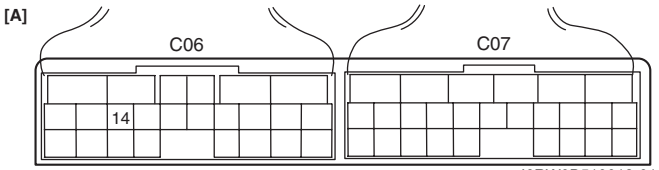

I6RW0B510012-01

1. TCM	3. A/T
2. Timing solenoid valve	[A]: Terminal arrangement of TCM connector (viewed from harness side)

DTC Detecting Condition and Trouble Area

DTC detecting condition	Trouble area
Voltage of timing solenoid valve TCM terminal is low although TCM is commanding timing solenoid valve to turn ON.	• Timing solenoid valve circuit shorted to ground • Timing solenoid valve malfunction • TCM

DTC Confirmation Procedure

1) Connect scan tool to DLC with ignition switch OFF, if available.
2) Clear DTC in TCM memory.
3) Start engine and shift select lever to “N” range.
4) Repeat shifting select lever from “N” range to “D” range and vice versa for 3 times.
5) Check DTC.

DTC Troubleshooting

Step	Action	Yes	No
1	*Was “A/T System Check” performed?*	Go to Step 2.	Go to “A/T System Check”.
2	**Check timing solenoid valve resistance** 1) Turn ignition switch OFF. 2) Disconnect valve body harness connector (1), (2) on transaxle. 3) Check for proper connection to solenoid valve at “BLU/BLK” circuit. 4) Check resistance of solenoid valve. **<u>Timing solenoid valve resistance</u>** **Between terminal of transaxle side valve body harness connector and transaxle: 11 – 15 Ω at 20 °C (68 °F)** 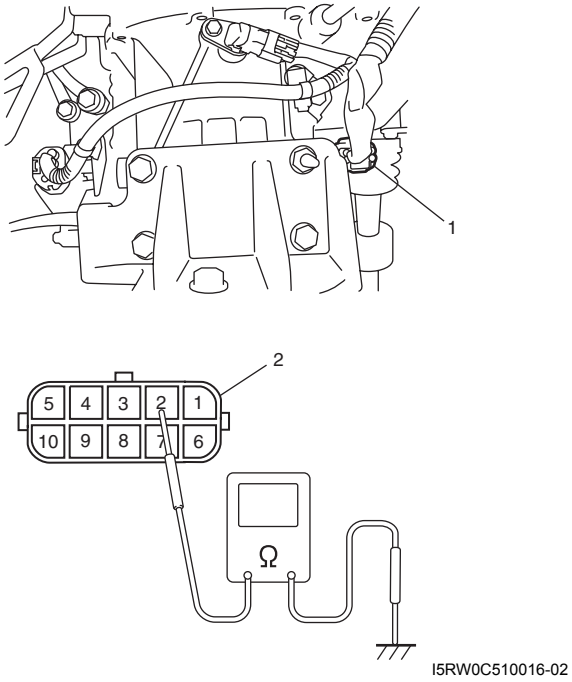 *Is check result satisfactory?*	Go to Step 3.	Replace timing solenoid valve or lead wire.
3	**Check timing solenoid valve circuit for ground short** 1) Connect valve body harness connector. 2) Disconnect TCM connectors. 3) Measure resistance between terminal “C06-14” of disconnected harness side TCM connector and ground. *Is it 11 – 15 Ω at 20 °C (68 °F)?*	Intermittent trouble or faulty TCM. Check for intermittent referring to “Intermittent and Poor Connection Inspection in Section 00”. If OK, substitute a known-good TCM and recheck.	“BLU/BLK” circuit shorted to ground.

DTC P0788: Shift / Timing Solenoid Control Circuit High

S7RW0A5104032

Wiring Diagram

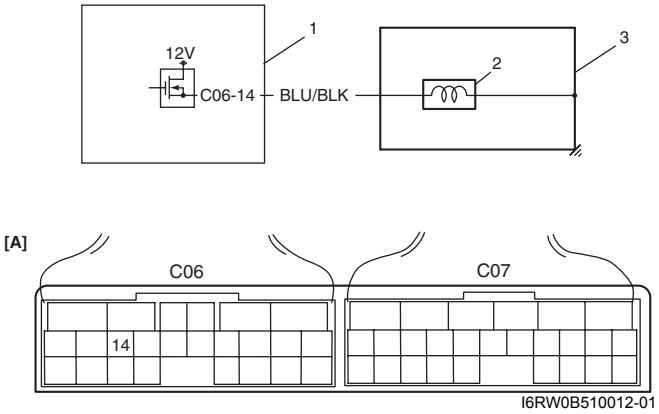

1. TCM	3. A/T
2. Timing solenoid valve	[A]: Terminal arrangement of TCM connector (viewed from harness side)

DTC Detecting Condition and Trouble Area

DTC detecting condition	Trouble area
Voltage of timing solenoid valve TCM terminal is high although TCM is commanding timing solenoid valve to turn OFF.	• Timing solenoid valve circuit open or shorted to power circuit • Timing solenoid valve malfunction • TCM

DTC Confirmation Procedure

1) Connect scan tool to DLC with ignition switch OFF, if available.
2) Clear DTC in TCM memory.
3) Start engine and shift select lever to “N” range.
4) Repeat shifting select lever from “N” range to “D” range and vice versa for 3 times.
5) Check DTC.

DTC Troubleshooting

Step	Action	Yes	No
1	*Was “A/T System Check” performed?*	Go to Step 2.	Go to “A/T System Check”.
2	**Check timing solenoid valve circuit for IG short** 1) Disconnect TCM connectors. 2) Turn ignition switch ON and measure voltage between terminal “C06-14” of harness side TCM connector and ground. *Is it 0 – 1 V?*	Go to Step 3.	“BLU/BLK” circuit shorted to power circuit.
3	**Check timing solenoid valve circuit for open** 1) Measure resistance between terminal “C06-14” of disconnected harness side TCM connector and ground. *Is it 11 – 15 Ω at 20 °C (68 °F)?*	Intermittent trouble or faulty TCM. Check for intermittent referring to “Intermittent and Poor Connection Inspection in Section 00”. If OK, substitute a known-good TCM and recheck.	Go to Step 4.

Step	Action	Yes	No
4	**Check timing solenoid valve resistance** 1) Turn ignition switch OFF. 2) Disconnect valve body harness connector (1), (2) on transaxle. 3) Check for proper connection to solenoid valve at “BLU/BLK” circuit. 4) Check resistance of solenoid valve. **Timing solenoid valve resistance** **Between terminal of transaxle side valve body harness connector and transaxle: 11 – 15 Ω at 20 °C (68 °F)** 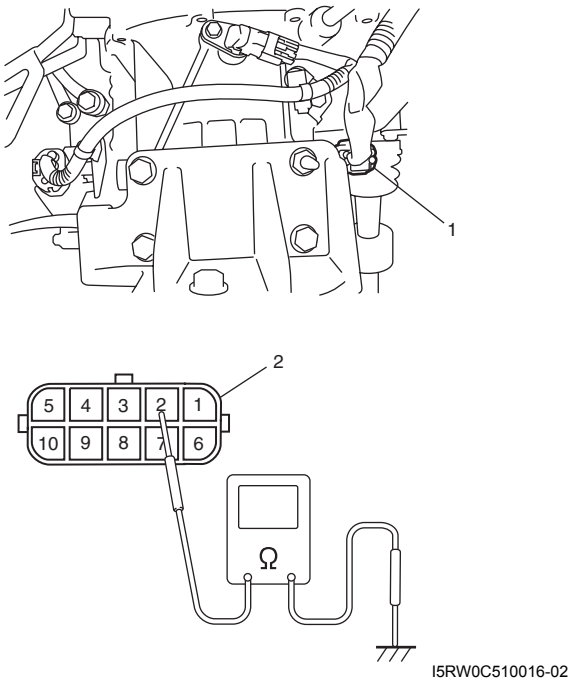 *Is check result satisfactory?*	“BLU/BLK” circuit open.	Replace timing solenoid valve or lead wire.

DTC P0961: Pressure Control Solenoid “A” Control Circuit Range / Performance

S7RW0A5104033

Wiring Diagram

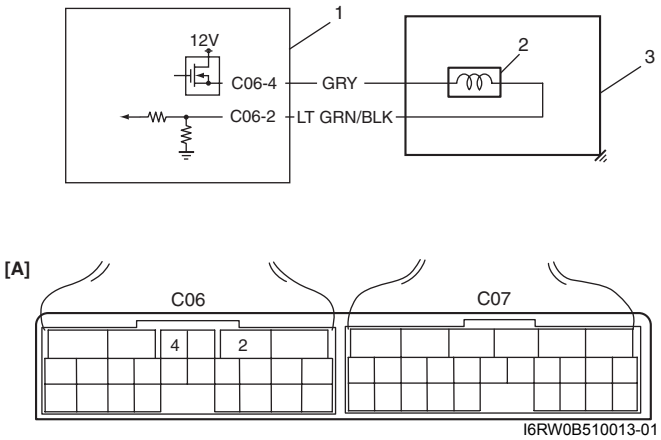

1. TCM	3. A/T
2. Pressure control solenoid valve	[A]: Terminal arrangement of TCM connector (viewed from harness side)

DTC Detecting Condition and Trouble Area

DTC detecting condition	Trouble area
Difference between actual current of control solenoid valve circuit and current of control solenoid valve circuit calculated by TCM is more than specification.	• Malfunction of pressure control solenoid valve or its circuit malfunction • TCM

DTC Confirmation Procedure

1) Connect scan tool to DLC with ignition switch OFF, if available.
2) Clear DTC in TCM memory.
3) Start engine.
4) Keep engine running at idle speed for 30 seconds or more.
5) Stop vehicle and check DTC.

DTC Troubleshooting

Step	Action	Yes	No
1	*Was "A/T System Check" performed?*	Go to Step 2.	Go to "A/T System Check".
2	**Check pressure control solenoid valve resistance** 1) Turn ignition switch OFF. 2) Disconnect valve body harness connector (1), (2) on automatic transaxle. 3) Check for proper connection to terminal of valve body harness connector at "GRY" and "LT GRN/BLK" circuit. 4) check resistance of pressure control solenoid valve. **<u>Pressure control solenoid valve resistance</u>** **Between terminals of transaxle side valve body harness connector: 5.0 – 5.6 Ω at 20 °C (68 °F)** **Between terminals of transaxle side valve body harness connector and transaxle: Infinity** 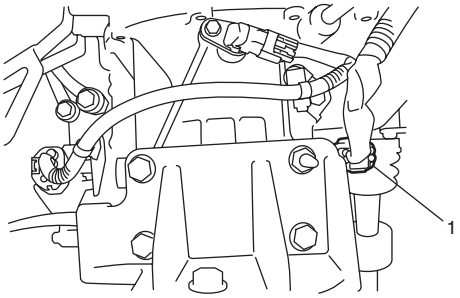 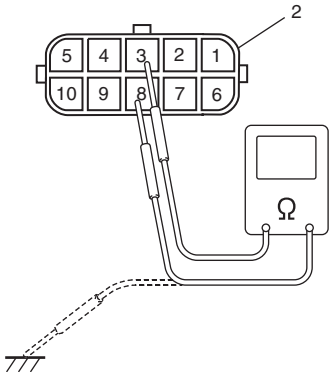 I5RW0C510018-03 *Is check results satisfactory?*	Go to Step 3.	Replace pressure control solenoid valve or valve body harness.

Step	Action	Yes	No
3	**Check for pressure control solenoid valve circuit** 1) Disconnect TCM connectors. 2) Check for proper connection to TCM at terminals “C06-2” and “C06-4”. If connection is OK, check circuit for open, short, and high resistance for the following circuit. • Between “C06-2” terminal of TCM connector and “LT GRN/BLK” terminal of valve body harness connector. • Between “C06-4” terminal of TCM connector and “GRY” terminal of valve body harness connector. *Are they in good condition?*	Intermittent trouble or faulty TCM. Check for intermittent referring to “Intermittent and Poor Connection Inspection in Section 00”. If OK, substitute a known-good TCM and recheck.	Repair “LT GRN/BLK” and/or “GRY” circuit.

DTC P0962: Pressure Control Solenoid Control Circuit Low

S7RW0A5104034

Wiring Diagram

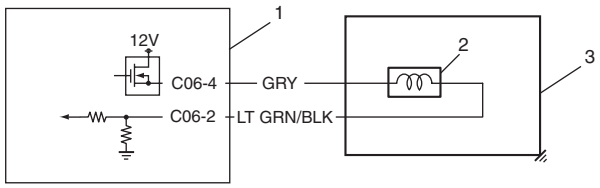

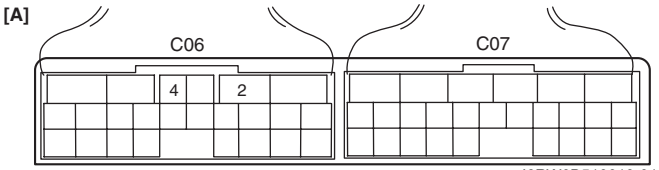

I6RW0B510013-01

1. TCM	3. A/T
2. Pressure control solenoid valve	[A]: Terminal arrangement of TCM connector (viewed from harness side)

DTC Detecting Condition and Trouble Area

DTC detecting condition	Trouble area
Pressure control solenoid valve output voltage is too low comparing with TCM command value.	• Pressure control solenoid valve circuit open or shorted to ground • Malfunction of pressure control solenoid valve • TCM

DTC Confirmation Procedure

1) Connect scan tool to DLC with ignition switch OFF, if available.
2) Clear DTC in TCM memory.
3) Start engine.
4) Keep engine running at idle speed for 30 seconds or more.
5) Stop vehicle and check DTC.

DTC Troubleshooting

Step	Action	Yes	No
1	*Was "A/T System Check" performed?*	Go to Step 2.	Go to "A/T System Check".
2	**Check pressure control solenoid valve resistance** 1) Turn ignition switch OFF. 2) Disconnect valve body harness connector (1), (2) on automatic transaxle. 3) Check for proper connection to solenoid at "GRY" and "LT GRN/BLK" circuit. 4) Check resistance of pressure control solenoid. **<u>Pressure control solenoid valve resistance</u>** **Between terminals of transaxle side valve body harness connector: 5.0 – 5.6 Ω at 20 °C (68 °F)** **Between terminals of transaxle side valve body harness connector and Transaxle: Infinity** 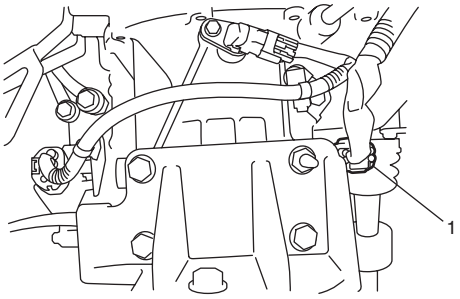 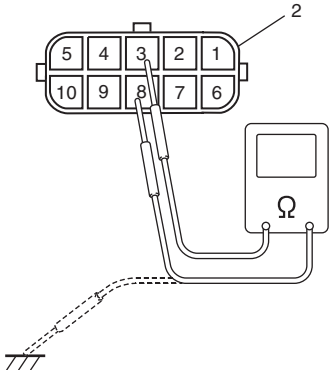 I5RW0C510018-03 *Is check results satisfactory?*	Go to Step 3.	Replace pressure control solenoid valve or valve body harness.
3	**Check pressure control solenoid valve circuit for ground short** 1) Connect valve body harness connector. 2) Disconnect TCM connectors. 3) Check for proper connection to TCM at terminals "C06-2" and "C06-4". If connection is OK, check continuity between terminal "C06-4" of disconnected harness side TCM connector and ground. *Is continuity indicated?*	"GRY" or "LT GRN/BLK" circuit shorted to ground.	Go to Step 4.

Step	Action	Yes	No
4	**Check pressure control solenoid valve circuit for open** 1) Check resistance continuity between terminals “C06-2” and “C06-4” of disconnected harness side TCM connector. *Is it infinite?*	“GRY” or “LT GRN/BLK” circuit open.	Intermittent trouble or faulty TCM. Check for intermittent referring to “Intermittent and Poor Connection Inspection in Section 00”. If OK, substitute a known-good TCM and recheck.

DTC P0963: Pressure Control Solenoid Control Circuit High

S7RW0A5104035

Wiring Diagram

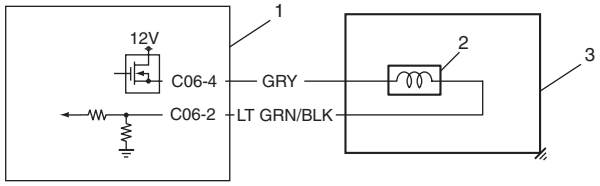

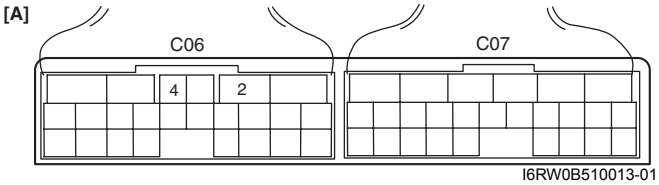

I6RW0B510013-01

1. TCM	3. A/T
2. Pressure control solenoid valve	[A]: Terminal arrangement of TCM connector (viewed from harness side)

DTC Detecting Condition and Trouble Area

DTC detecting condition	Trouble area
Pressure control solenoid valve output voltage is too high comparing with TCM command value.	• Pressure control solenoid valve circuit shorted to power circuit • Pressure control solenoid valve malfunction • TCM

DTC Confirmation Procedure

1) Connect scan tool to DLC with ignition switch OFF, if available.
2) Clear DTC in TCM memory.
3) Start engine.
4) Keep engine running at idle speed for 15 seconds or more.
5) Check DTC.

DTC Troubleshooting

Step	Action	Yes	No
1	*Was "A/T System Check" performed?*	Go to Step 2.	Go to "A/T System Check".
2	**Check pressure control solenoid circuit for IG short** 1) Connect valve body harness connector. 2) Disconnect TCM connectors. 3) Check for proper connection to TCM at terminal "C06-2" and "C06-4". 4) If connection is OK, turn ignition switch ON and measure voltage between terminal "C06-4" of disconnected harness side TCM connector and ground. *Is it 0 – 2 V?*	Go to Step 3.	"BRN/YEL" or "LT GRN" circuit shorted to power circuit.
3	**Check pressure control solenoid valve resistance** 1) Turn ignition switch OFF. 2) Disconnect valve body harness connector (1), (2) on automatic transaxle. 3) Check for proper connection to solenoid at "GRY" and "LT GRN/BLK" circuit. 4) Check resistance of pressure control solenoid. **<u>Pressure control solenoid valve resistance</u>** **Between terminals of transaxle side valve body harness connector: 5.0 – 5.6 Ω at 20 °C (68 °F)** **Between terminals of transaxle valve body harness connector and transaxle: Infinity** 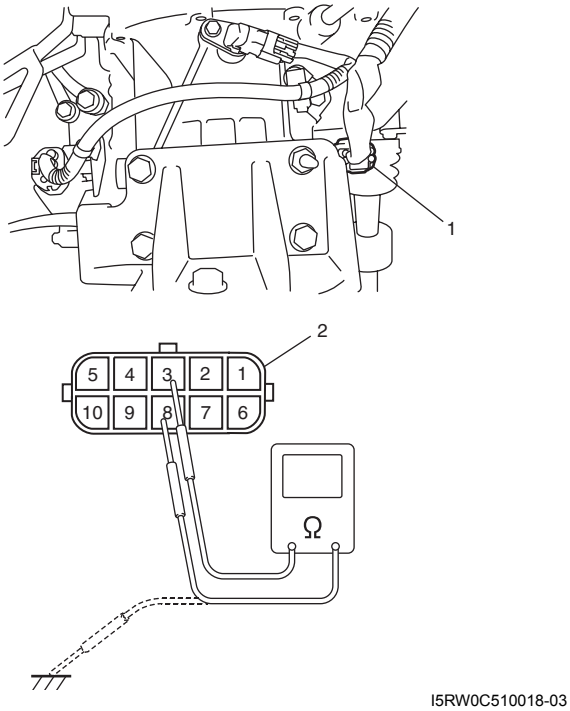 *Is check results satisfactory?*	Intermittent trouble or faulty TCM. Check for intermittent referring to "Intermittent and Poor Connection Inspection in Section 00". If OK, substitute a known-good TCM and recheck.	Replace pressure control solenoid valve or valve body harness.

DTC P0973 / P0976: Shift Solenoid-A (No.1) Control Circuit Low / Shift Solenoid-B (No.2) Control Circuit Low

S7RW0A5104036

Wiring Diagram

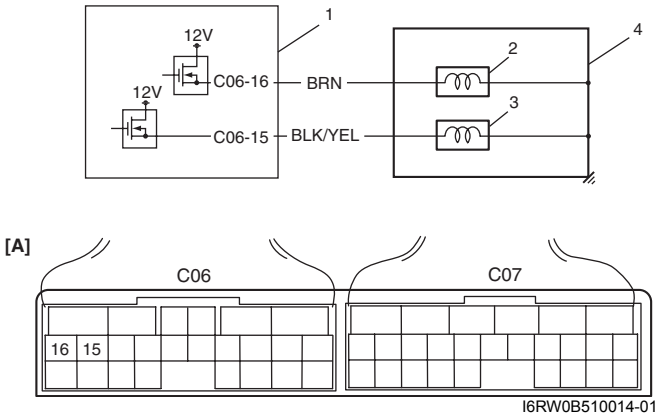

1. TCM	3. Shift solenoid valve-B (No.2)
2. Shift solenoid valve-A (No.1)	[A]: Terminal arrangement of TCM connector (Viewed from harness side)

DTC Detecting Condition and Trouble Area

DTC detecting condition	Trouble area
Voltage of shift solenoid valve TCM terminal is low although TCM is commanding shift solenoid to turn ON	• Shift solenoid valve circuit shorted to ground • Malfunction of shift solenoid valve • TCM

DTC Confirmation Procedure

⚠ WARNING

- **When performing a road test, select a place where there is no traffic or possibility of a traffic accident and be very careful during testing to avoid occurrence of an accident.**
- **Road test should be carried out with 2 persons, a driver and tester, on a level road.**

1) Connect scan tool to DLC with ignition switch OFF, if available.
2) Clear DTC in TCM memory.
3) Start engine shift select lever to “D” range.
4) Start vehicle and increase vehicle speed until gear position reaches 3rd or 4th gear.
5) Decrease vehicle speed and stop vehicle.
6) Check DTC.

DTC Troubleshooting

Step	Action	Yes	No
1	*Was "A/T System Check" performed?*	Go to Step 2.	Go to "A/T System Check".
2	**Check shift solenoid valve resistance** 1) Turn ignition switch OFF. 2) Disconnect valve body harness connector (1), (2) on automatic transmission. 3) Check for proper connection to solenoid at "BRN" (for shift solenoid valve-A (No.1)) or "BLK/YEL" (for shift solenoid valve-B (No.2)) circuit. Check resistance of solenoid valve. **<u>Shift solenoid valve resistance</u>** **Between shift solenoid valve-A (No.1) terminal (3) and transaxle: 11 – 15 Ω at 20 °C (68 °F)** **Between shift solenoid valve-B (No.2) terminal (4) and transaxle: 11 – 15 Ω at 20 °C (68 °F)** 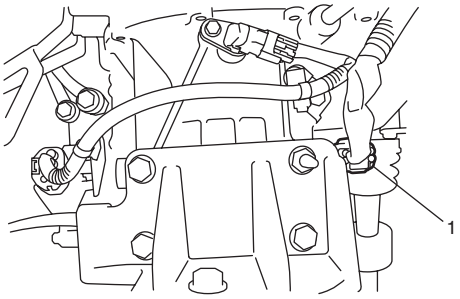 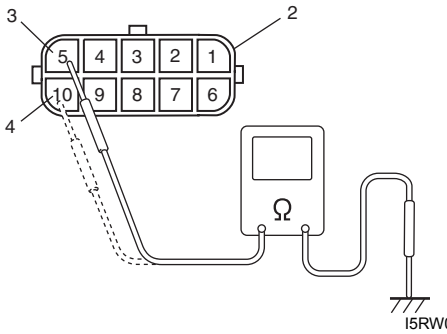 I5RW0C510020-01 *Is check results satisfactory?*	Go to Step 3.	Replace applicable shift solenoid valve or valve body harness.
3	**Check shift solenoid valve circuit for ground short** 1) Disconnect TCM connectors. 2) Check for proper connection to TCM at terminals "C06-16" (for shift solenoid valve-A (No.1)) or "C06-15" (for shift solenoid valve-B (No.2)). 3) If connection is OK, check continuity between terminal "C06-16" (for shift solenoid valve-A (No.1)) or "C06-15" (for shift solenoid valve-B (No.2)) of disconnected harness side TCM connector and ground. *Is continuity indicated?*	DTC P0973: "BRN" circuit shorted to ground. DTC P0976: "BLK/YEL" circuit shorted to ground.	Intermittent trouble or faulty TCM. Check for intermittent referring to "Intermittent and Poor Connection Inspection in Section 00". If OK, substitute a known-good TCM and recheck.

DTC P0974 / P0977: Shift Solenoid-A (No.1) / Shift Solenoid-B (No.2) Control Circuit High

S7RW0A5104037

Wiring Diagram

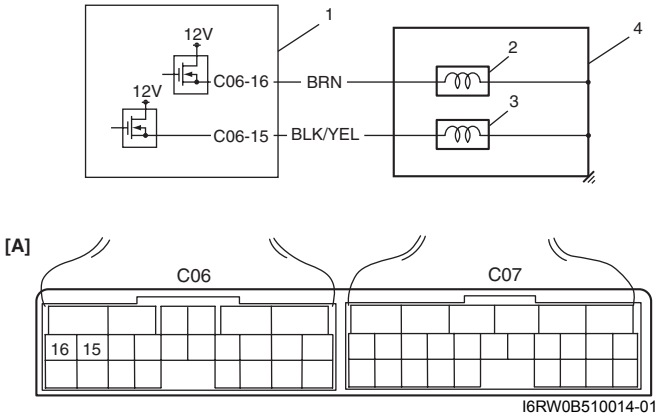

1. TCM	3. Shift solenoid valve-B (No.2)	[A]: Terminal arrangement of TCM connector (viewed from harness side)
2. Shift solenoid valve-A (No.1)	4. A/T	

DTC Detecting Condition and Trouble Area

DTC detecting condition	Trouble area
Voltage of shift solenoid valve TCM terminal is high although TCM is commanding shift solenoid to turn OFF	• Shift solenoid valve circuit open or shorted to power circuit • Malfunction of shift solenoid valve • TCM

DTC Confirmation Procedure

⚠ WARNING

- **When performing a road test, select a place where there is no traffic or possibility of a traffic accident and be very careful during testing to avoid occurrence of an accident.**
- **Road test should be carried out with 2 persons, a driver and a tester, on a level road.**

1) Connect scan tool to DLC with ignition switch OFF, if available.
2) Clear DTC in TCM memory.
3) Start engine and shift select lever to “D” range.
4) Start vehicle and increase vehicle speed until gear position reaches 3rd or 4th gear.
5) Decrease vehicle speed and stop vehicle.
6) Check DTC.

DTC Troubleshooting

Step	Action	Yes	No
1	*Was "A/T System Check" performed?*	Go to Step 2.	Go to "A/T System Check".
2	**Check shift solenoid valve circuit for IG short** 1) Connect valve body harness connector. 2) Disconnect TCM connectors. 3) Check for proper connection to TCM at terminal "C06-16" (for shift solenoid valve-A (No.1)) or "C06-15" (for shift solenoid valve-B (No.2)). 4) If connection is OK, turn ignition switch ON and measure voltage between terminal "C06-16" (for shift solenoid valve-A (No.1)) or "C06-15" (for shift solenoid valve-B (No.2)) of disconnected harness side TCM connector and ground. *Is it 0 – 2 V?*	Go to Step 3.	DTC P0974: "BRN" circuit shorted to power circuit. DTC P0977: "BLK/YEL" circuit shorted to power circuit.
3	**Check shift solenoid valve resistance** 1) Turn ignition switch OFF. 2) Disconnect valve body harness connector (1), (2) on automatic transaxle. 3) Check for proper connection to solenoid at "BRN" (for shift solenoid valve-A (No.1)) or "BLK/YEL" (for shift solenoid valve-B (No.2)) circuit. Check resistance of solenoid valve. **<u>Shift solenoid valve resistance</u>** **Between shift solenoid valve-A (No.1) terminal (3) and transaxle: 11 – 15 Ω at 20 °C (68 °F)** **Between shift solenoid valve-B (No.2) terminal (4) and transaxle: 11 – 15 Ω at 20 °C (68 °F)** 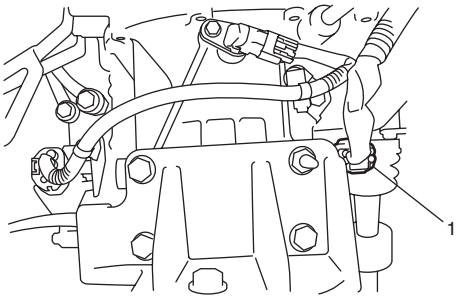 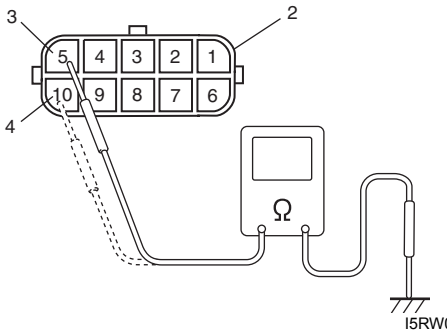 *Is check results satisfactory?*	Intermittent trouble or faulty TCM. Check for intermittent referring to "Intermittent and Poor Connection Inspection in Section 00". If OK, substitute a known-good TCM and recheck.	Replace applicable shift solenoid valve or valve body harness.

DTC P1702: Internal Control Module Memory Check Sum Error

S7RW0A5104038

DTC Detecting Condition and Trouble Area

DTC detecting condition	Trouble area
Calculation of current data stored in TCM is not correct comparing with pre-stored checking data in TCM.	TCM

DTC Confirmation Procedure

1) Connect scan tool to DLC with ignition switch OFF.
2) Clear DTC in TCM memory.
3) After 10 seconds passed from turning ignition switch ON, check DTC.

DTC Troubleshooting

Step	Action	Yes	No
1	*Is DTC P1702 detected after performing “DTC Confirmation Procedure”?*	Faulty TCM. Replace TCM.	Could be a temporary malfunction of TCM.

DTC P1723: Range Select Switch Malfunction

S7RW0A5104039

Wiring Diagram

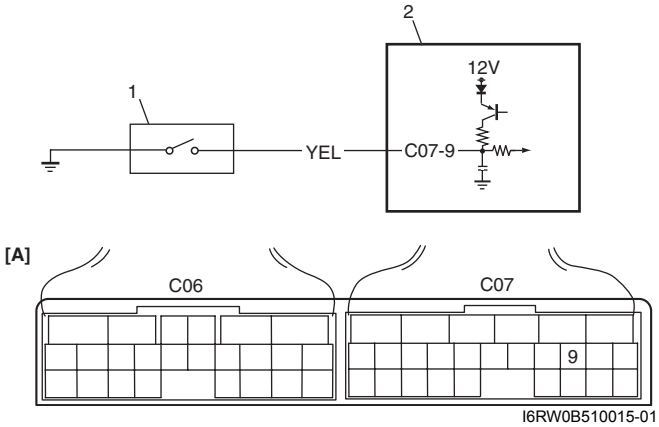

1. “3” position switch	2. TCM	[A]: TCM connector (viewed from harness side)

DTC Detecting Condition and Trouble Area

DTC detecting condition	Trouble area
“3” position switch ON signal is inputted although transmission range switch signal is inputted P, R, N or L. range.	• “3” position switch or its circuit malfunction • TCM

DTC Confirmation Procedure

1) Connect scan tool to DLC with ignition switch OFF.
2) Clear DTCs in TCM and ECM memories by using scan tool and turn ignition switch ON.
3) Shift select lever to each of “L”, “2”, “3”, “D”, “N”, “R” and “P” ranges for 20 seconds each.
4) Check DTC, pending DTC and freeze-frame data.

DTC Troubleshooting

Step	Action	Yes	No
1	*Was "A/T System Check" performed?*	Go to Step 2.	Go to "A/T System Check".
2	**"3" position switch circuit for operation** 1) Connect SUZUKI scan tool to DLC with ignition switch OFF. 2) Turn ignition switch ON and check "3" position switch signal on scan tool data display when shifting select lever to each range. *Does indicate "3" position switch condition OFF when shifting select lever to "P", "R", "N" and "L" range?*	Substitute a known-good TCM and recheck.	Go to Step 3.
3	**"3" position switch signal inspection** With ignition switch ON, check voltage between "C07-9" terminal of TCM coupler and ground. **"3" position switch specifications** **Shift select lever to "3" or "2" range: Battery voltage** **Shift select lever to other above range: 0 V** *Is the result as specified?*	Substitute a known-good BCM and recheck.	Go to Step 4.
4	**Check "3" position switch operation** *Is it in good condition?*	"YEL" wire shorted to ground.	Replace "3" position switch.

DTC P1878: Torque Converter Clutch Shudder

S7RW0A5104040

DTC Detecting Condition and Trouble Area

DTC detecting condition	Trouble area
The acceleration slip control function stops when the variation in the output revolution speed of the specified amplitude and specified cycle is detected within a specified period of time. When the specified variation is not detected after the acceleration slip control stops.	• Mismatching ATF • Torque converter clutch malfunction • Valve body

DTC Confirmation Procedure

⚠ WARNING

- **When performing a road test, select a place where there is no traffic or possibility of a traffic accident and be very careful during testing to avoid occurrence of an accident.**
- **Road test should be carried out with 2 persons, a driver and tester, on a level road.**

1) Connect scan tool to DLC with ignition switch OFF.
2) Clear DTCs in TCM and ECM memories by using scan tool.
3) Start engine and warm it up to normal operating temperature.
4) Drive vehicle with 3rd or 4th gear in "D" range and slip controlled lock-up ON for 20 seconds or longer referring to "A/T System Diagram".
5) Stop vehicle.
6) Check DTC, pending DTC and freeze-frame data.

DTC Troubleshooting

Step	Action	Yes	No
1	*Was "A/T System Check" performed?*	Go to Step 2.	Go to "A/T System Check".
2	Change A/T fluid referring to "A/T Fluid Change". Check DTC after performing "DTC Confirmation Procedure". *Is DTC P1878 still indicated?*	Faulty torque converter clutch. Replace torque converter.	System is in good condition.

DTC P2762: Torque Converter Clutch (TCC) Pressure Control Solenoid Control Circuit Range / Performance

S7RW0A5104041

Wiring Diagram

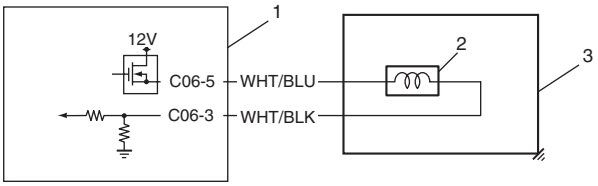

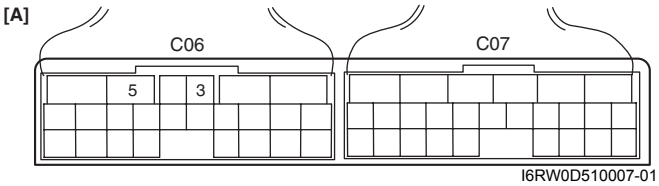

I6RW0D510007-01

1. TCM	3. A/T
2. TCC solenoid valve	[A]: Terminal arrangement of TCM connector (viewed from harness side)

DTC Detecting Condition and Trouble Area

DTC detecting condition	Trouble area
Difference between actual current of TCC solenoid valve circuit and current of TCC solenoid valve circuit calculated by TCM is more than specification.	• TCC solenoid valve or its circuit malfunction • TCM

DTC Confirmation Procedure

1) Connect scan tool to DLC with ignition switch OFF, if available.
2) Clear DTC in TCM memory.
3) Start engine.
4) Keep engine running at idle speed for 30 seconds or more.
5) Stop vehicle and check DTC.

DTC Troubleshooting

Step	Action	Yes	No
1	*Was "A/T System Check" performed?*	Go to Step 2.	Go to "A/T System Check".
2	**Check TCC solenoid valve resistance** 1) Turn ignition switch OFF. 2) Disconnect valve body harness connector (1), (2) on automatic transaxle. 3) Check for proper connection to terminal at "WHT/BLU" and "WHT/BLK" circuit. 4) Check resistance of TCC solenoid valve. **<u>TCC solenoid valve resistance</u>** **Between terminals of transaxle side valve body harness connector: 5.0 – 5.6 Ω at 20 °C (68 °F)** **Between terminals of transaxle valve body harness connector and transaxle: Infinity** 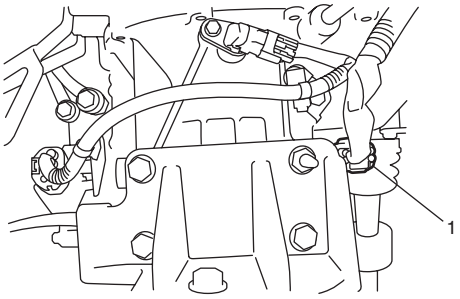 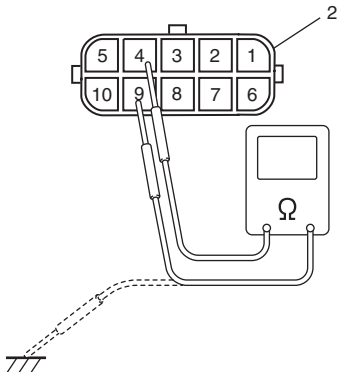 I5RW0C510023-01 *Is check results satisfactory?*	Go to Step 3.	Replace TCC solenoid valve or valve body harness.
3	**Check for pressure control solenoid valve circuit** 1) Disconnect TCM connectors 2) Check for proper connection to TCM at terminals "C06-3" and "C06-5". If connection is OK, check circuit for open, short and high resistance for the following circuit. • Between "C06-3" terminal of TCM connector and "WHT/BLK" terminal of valve body harness connector. • Between "C06-4" terminal of TCM connector and "WHT/BLU" terminal of valve body harness connector. *Are they in good condition?*	Intermittent trouble or faulty TCM. Check for intermittent referring to "Intermittent and Poor Connection Inspection in Section 00". If OK, substitute a known-good TCM and recheck.	Repair "WHT/BLU" and/or "WHT/BLK" circuit.

DTC P2763: Torque Converter Clutch (TCC) Pressure Control Solenoid Control Circuit High

S7RW0A5104042

Wiring Diagram

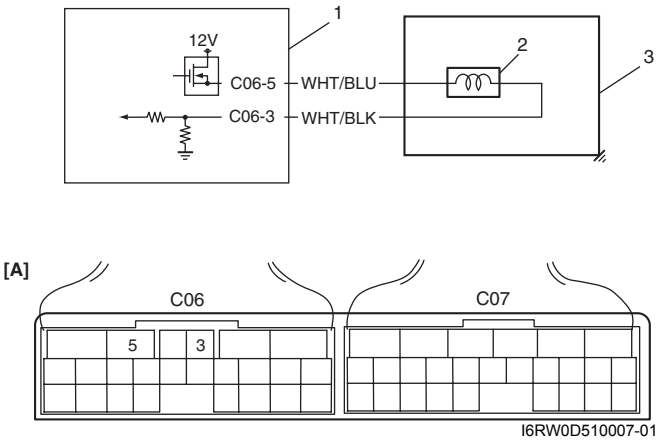

1. TCM	3. A/T
2. TCC solenoid valve	[A]: Terminal arrangement of TCM connector (viewed from harness side)

DTC Detecting Condition and Trouble Area

DTC detecting condition	Trouble area
Voltage of TCC solenoid valve TCM terminal is high although TCM is commanding TCC solenoid valve to turn OFF.	• TCC solenoid valve circuit shorted to ground • Malfunction of TCC solenoid valve • TCM

DTC Confirmation Procedure

⚠ WARNING

- **When performing a road test, select a place where there is no traffic or possibility of a traffic accident and be very careful during testing to avoid occurrence of an accident.**
- **Road test should be carried out with 2 persons, a driver and a tester, on a level road.**

1) Connect scan tool to DLC with ignition switch OFF, if available.
2) Clear DTC in TCM memory.
3) Start engine.
4) Keep engine running at idle speed in “P” range for 10 seconds or more.
5) Check DTC.

DTC Troubleshooting

Step	Action	Yes	No
1	*Was "A/T System Check" performed?*	Go to Step 2.	Go to "A/T System Check".
2	**Check TCC solenoid valve circuit for IG short** 1) Connect valve body harness connector. 2) Disconnect TCM connectors. 3) Check for proper connection to TCM at terminal "C06-3" and "C06-5". 4) If connection is OK, turn ignition switch ON and measure voltage between terminal "C06-3" of disconnected harness side TCM connector and ground between terminal "C06-5" of disconnected harness side TCM connector and ground. *Are voltage 1 V or less?*	Go to Step 3.	"WHT/BLU" or "WHT/BLK" circuit shorted to power circuit.
3	**Check TCC solenoid valve resistance** 1) Turn ignition switch OFF. 2) Disconnect valve body harness connector (1), (2) on automatic transaxle. 3) Check for proper connection to solenoid at "WHT/BLU" and "WHT/BLK" circuits. 4) Check resistance of TCC solenoid valve. **<u>TCC solenoid valve resistance</u>** **Between terminals of transaxle side valve body harness connector: 5.0 – 5.6 Ω at 20 °C (68 °F)** **Between terminals of transaxle side valve body harness connector and transaxle: Infinity** 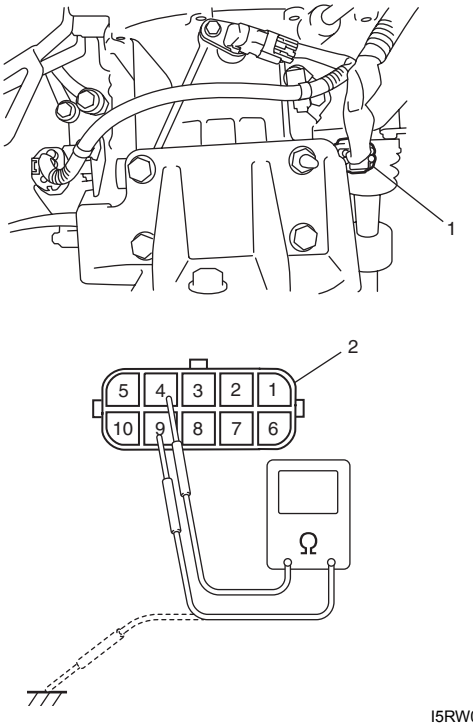 *Is check results satisfactory?*	Intermittent trouble or faulty TCM. Check for intermittent referring to "Intermittent and Poor Connection Inspection in Section 00". If OK, substitute a known-good TCM and recheck.	Replace TCC solenoid valve or lead wire.

DTC P2764: Torque Converter Clutch (TCC) Circuit Pressure Control Solenoid Control Circuit Low

S7RW0A5104043

Wiring Diagram

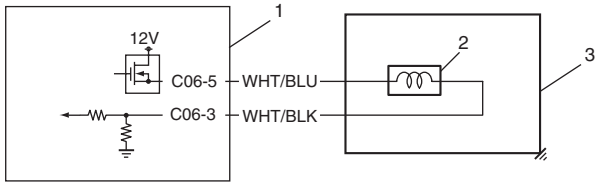

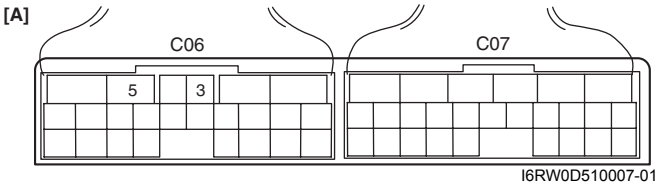

I6RW0D510007-01

1. TCM	3. A/T
2. TCC solenoid valve	[A]: Terminal arrangement of TCM connector (viewed from harness side)

DTC Detecting Condition and Trouble Area

DTC detecting condition	Trouble area
Voltage of TCC solenoid valve TCM terminal is low although TCM is commanding TCC solenoid valve to turn ON.	• TCC solenoid valve circuit shorted to ground • Malfunction of TCC solenoid valve • TCM

DTC Confirmation Procedure

⚠ WARNING

- **When performing a road test, select a place where there is no traffic or possibility of a traffic accident and be very careful during testing to avoid occurrence of an accident.**
- **Road test should be carried out with 2 persons, a driver and a tester, on a level road.**

1) Connect scan tool to DLC with ignition switch OFF, if available.
2) Clear DTC in TCM memory.
3) Start engine.
4) Keep engine running at idle speed in “P” range for 20 seconds or more.
5) Check DTC.

DTC Troubleshooting

Step	Action	Yes	No
1	*Was "A/T System Check" performed?*	Go to Step 2.	Go to "A/T System Check".
2	**Check TCC solenoid valve resistance** 1) Turn ignition switch OFF. 2) Disconnect valve body harness connector (1), (2) on automatic transaxle. 3) Check for proper connection to solenoid at "WHT/BLU" and "WHT/BLK" circuits. 4) Check resistance of TCC solenoid valve. **<u>TCC solenoid valve resistance</u>** **Between shift terminals of transaxle side valve body harness connector: 5.0 – 5.6 Ω at 20 °C (68 °F)** **Between shift terminals of transaxle side valve body harness connector and transaxle: Infinity** 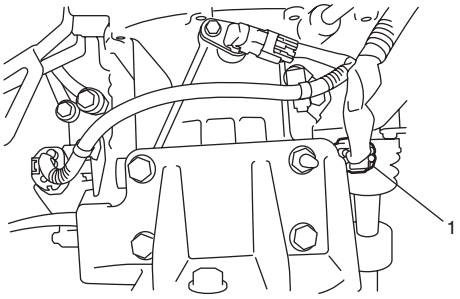 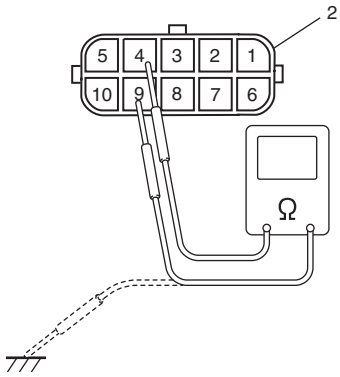 I5RW0C510023-01 *Is check results satisfactory?*	Go to Step 3.	Replace TCC solenoid valve or valve body harness.
3	**Check TCC solenoid valve circuit for ground short** 1) Disconnect TCM connectors. 2) Check for proper connection to TCM at terminals "C06-3" and "C06-5". 3) If connection is OK, check continuity between terminal "C06-5" of disconnected harness side TCM connector and ground, between terminal "C06-3" of disconnected harness side TCM connector and ground. *Are continuity indicated?*	"WHT/BLU" or "WHT/BLK" circuit shorted to ground.	Intermittent trouble or faulty TCM. Check for intermittent referring to "Intermittent and Poor Connection Inspection in Section 00". If OK, substitute a known-good TCM and recheck.

DTC U0073: Control Module Communication Bus Off

S7RW0A5104044

Refer to “Troubleshooting for CAN-DTC in Section 1A”.

DTC U0100: Lost Communication with ECM / PCM “A”

S7RW0A5104045

Refer to “Troubleshooting for CAN-DTC in Section 1A”.

Inspection of TCM and Its Circuits

S7RW0A5104046

TCM and its circuits can be checked at TCM wiring connectors by measuring voltage, pulse signal and resistance.

⚠ CAUTION

TCM cannot be checked by itself, it is strictly prohibited to connect voltmeter or ohmmeter to TCM with connector disconnected from it.

1) Remove TCM (1) from vehicle referring to “Transmission Control Module (TCM) Removal and Installation”.
2) Connect TCM connectors (2) to TCM.
3) Check voltage and/or pulse signal at each terminal of connectors connected using voltmeter (3) and oscilloscope (4).

NOTE

- **As each terminal voltage is affected by battery voltage, confirm that it is 11 V or more when ignition switch is ON.**
- **Voltage with asterisk(*) cannot be measured by voltmeter because it is pulse signal. Check it with oscilloscope if necessary.**

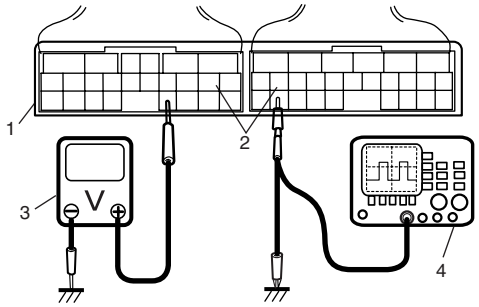

I4RS0A510021-02

Terminal arrangement of TCM coupler (Viewed from harness side)

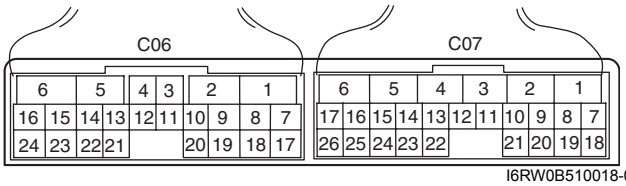

I6RW0B510018-01

Connector "C06"

Terminal	Wire color	Circuit	Standard voltage	Condition
1	BLK	Ground	0 – 1 V	Ignition switch ON
2	LT GRN/ BLK	Pressure control solenoid valve (–)	0.6 – 1.0 V	Ignition switch ON
3	WHT/BLK	TCC solenoid valve (–)	0.6 – 1.0 V	Ignition switch ON
4	GRY	Pressure control solenoid valve (+)	*0 – 0.6 V ↑↓ 10 – 14 V ("Reference waveform No. 1: ")	Engine running at idling. (Output signal is duty pulse. Duty ratio varies depending on throttle valve opening.)
5	WHT/BLU	TCC solenoid valve (+)	*0 – 0.6 V ↑↓ 10 – 14 V ("Reference waveform No. 2: ")	Engine running at idling. (Output signal is duty pulse. Duty ratio varies depending on torque converter clutch operating condition.)
6	YEL/BLK	Power source	10 – 14 V	Ignition switch ON
7	WHT	CAN communication line (Low)	*2.5 – 3.6 V ↑↓ 1.6 – 2.5 V ("Reference waveform No. 3: ")	Engine running at idling with after warming up. (CAN communication signal is pulse. Pulse signal frequency varies depending on engine condition.))
8	—	—	—	—
9	—	—	—	—
10	—	—	—	—
11	LT GRN	Transmission fluid temperature sensor (+)	2.9 – 3.1 V	Ignition switch ON, fluid temperature is 20 °C (68 °F)
			0.3 – 0.5 V	Ignition switch ON, fluid temperature is 100 °C (212 °F)
12	ORN	Transmission fluid temperature sensor (–)	0 – 1 V	Ignition switch ON
13	—	—	—	—
14	BLU/BLK	Timing solenoid valve	0 – 1 V	Ignition switch ON
15	BLK/YEL	Shift solenoid valve-B (No.2)	9 – 14 V	Ignition switch ON, select lever in "P" range
16	BRN	Shift solenoid valve-A (No.1)	9 – 14 V	Ignition switch ON, select lever in "P" range
17	RED	CAN communication line (High)	*2.5 – 3.6 V ↑↓ 1.6 – 2.5 V ("Reference waveform No. 3: ")	Engine running at idling with after warming up. (CAN communication signal is pulse. Pulse signal frequency varies depending on engine condition.)
18	—	—	—	—
19	—	—	—	—
20	—	—	—	—
21	—	—	—	—
22	—	—	—	—
23	BLK	Ground	0 – 1 V	Ignition switch ON
24	WHT/RED	Power source for back-up	10 – 14 V	Constantly

Connector “C07”

Terminal	Wire color	Circuit	Standard voltage	Condition
1	RED	Transmission range sensor (“R” range)	8 – 14 V	Ignition switch ON, select lever at “R” range
			0 – 1 V	Ignition switch ON, select lever at other than “R” range
2	—	—	—	—
3	—	—	—	—
4	—	—	—	—
5	—	—	—	—
6	WHT	Input shaft speed sensor (+)	2 – 3 V	Ignition switch turned ON, engine stops.
			*(“Reference waveform No. 4: ”)	While engine running. (Output signal is waveform. Waveform frequency varies depending on output shaft speed. (16 pulses are generated par 1 input shaft revolution.))
7	GRN	Transmission range sensor (“D” or “3” range)	8 – 14 V	Ignition switch ON, select lever at “D” or “3” range
			0 – 1 V	Ignition switch ON, select lever at other than “D” or “3” range
8	GRN/ORN	Transmission range sensor (“N” range)	8 – 14 V	Ignition switch ON, select lever at “N” range
			0 – 1 V	Ignition switch ON, select lever at other than “N” range
9	YEL	“3” position switch	8 – 14 V	Ignition switch ON, select lever at other than “3” or “2” range
			0 – 1 V	Ignition switch ON, select lever at “3” or “2” range
10	—	—	—	—
11	—	—	—	—
12	—	—	—	—
13	—	—	—	—
14	—	—	—	—
15	—	—	—	—
16	BLK	Input shaft speed sensor (–)	2 – 3 V	Ignition switch ON, engine at stop
17	—	—	—	—
18	LT GRN/ BLK	Transmission range sensor (“L” range)	8 – 14 V	Ignition switch ON, select lever at “L” range
			0 – 1 V	Ignition switch ON, select lever at other than “L” range
19	GRN/YEL	Transmission range sensor (“2” range)	8 – 14 V	Ignition switch ON, select lever at “2” range
			0 – 1 V	Ignition switch ON, select lever at other than “2” range
20	PNK/BLK	Transmission range sensor (“P” range)	8 – 14 V	Ignition switch ON, select lever at “P” range
			0 – 1 V	Ignition switch ON, select lever at other than “P” range
21	—	—	—	—
22	—	—	—	—
23	BLU	Data link connector	8 – 14 V	Ignition switch ON
24	—	—	—	—
25	PPL	Output shaft speed sensor (VSS)	8 – 14 V	Ignition switch ON
			*0 – 1 V ↑↓ 10 – 14 V (“Reference waveform No. 5: ”)	Vehicle running. (Sensor signal is pulse. Pulse frequency varies depending on vehicle speed. (8190 pulses are generated par 60 km/h, 37.5 mile/h)
26	—	—	—	—

Reference waveform No. 1
Pressure control solenoid valve signal at engine idling.

Measurement terminal	CH1: “C06-4” to “C06-1”
Oscilloscope setting	CH1: 5 V/DIV TIME: 2 ms/DIV
Measurement condition	• After warmed up to normal operating temperature • Engine at specified idle speed with “P” range.

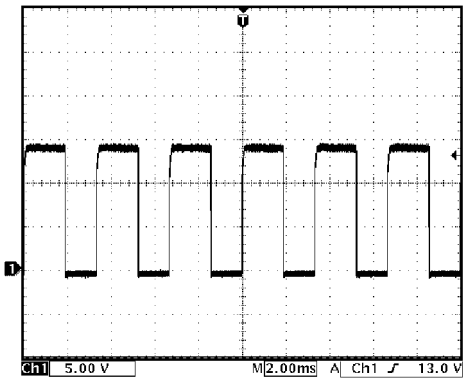

I3RM0B510029-01

Reference waveform No. 2
TCC pressure control solenoid valve signal at engine idling.

Measurement terminal	CH1: “C06-5” to “C06-1”
Oscilloscope setting	CH1: 5 V/DIV Time: 2 ms/DIV
Measurement condition	• After warmed up to normal operating temperature • Engine at specified idle speed with “P” range

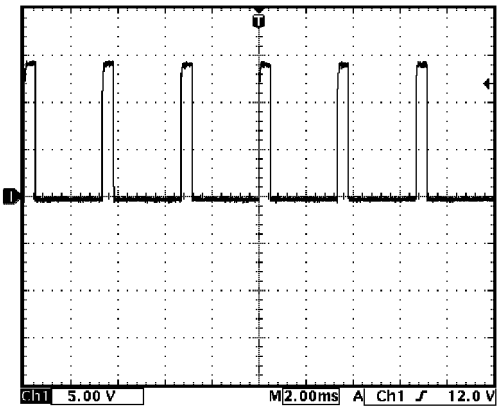

I4RS0A510024-01

Reference waveform No. 3
CAN communication line (High & Low) signal at engine idling.

Measurement terminal	CH1: “C06-7” to “C06-1” CH2: “C06-17” to “C06-1”
Oscilloscope setting	CH1: 1 V/DIV TIME: 100 μs/DIV
Measurement condition	• After warmed up to normal operating temperature • Engine at specified idle speed with “P” range.

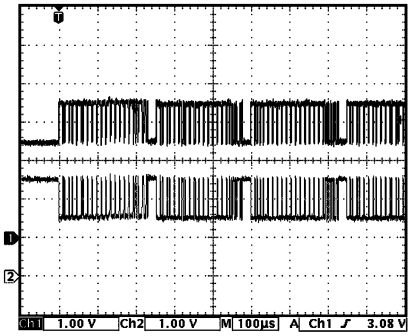

I3RM0B510030-01

Reference waveform No. 4
Input shaft speed sensor signal at engine idling.

Measurement terminal	CH1: “C07-6” to “C06-1”
Oscilloscope setting	CH1: 2 V/DIV TIME: 10 ms/DIV
Measurement condition	• After warmed up to normal operating temperature • Engine at specified idle speed with “P” range.

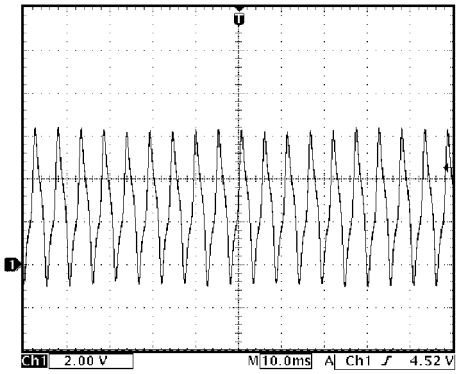

I3RM0B510027-01

Reference waveform No. 5

Output shaft speed sensor (VSS) signal at vehicle speed 60 km/h (37 mile/h).

Measurement terminal	CH1: “C07-25” to “C06-1”
Oscilloscope setting	CH1: 5 V/DIV TIME: 20 ms/DIV
Measurement condition	• After warmed up to normal operating temperature • Drive vehicle at 60 km/h (37 mile/h).

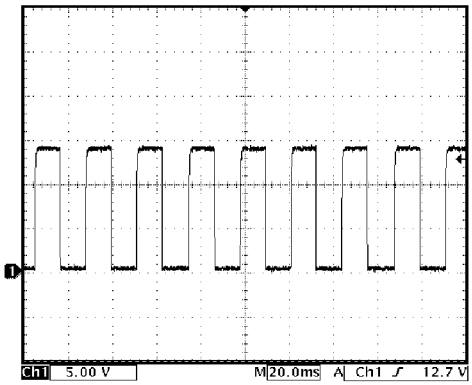

I3RM0B510028-01

TCM Power and Ground Circuit Check

S7RW0A5104047

Wiring Diagram

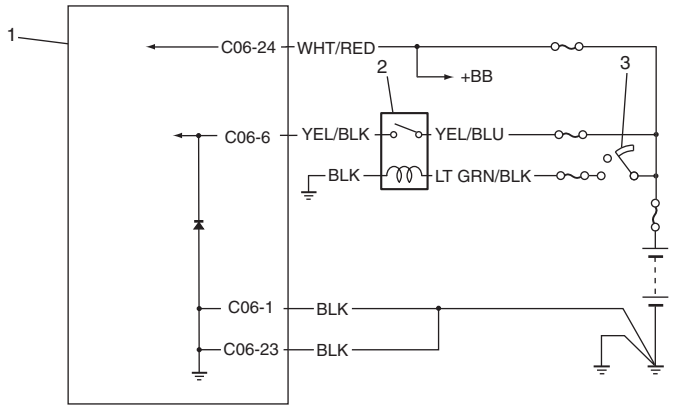

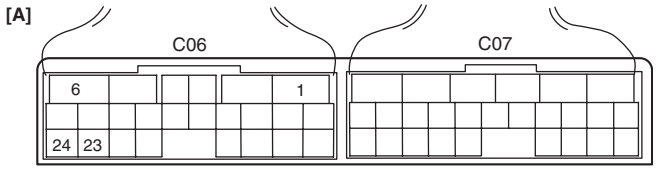

I6RW0B510019-01

1. TCM	3. Ignition switch
2. A/T relay	[A]: Terminal arrangement of TCM connector (viewed from harness side)

Troubleshooting

Step	Action	Yes	No
1	**Check TCM back-up power circuit** 1) Disconnect TCM connector with ignition switch OFF. 2) Check for proper connection to TCM at “C06-24” terminal. 3) If OK, check voltage at terminal “C06-24” of disconnected TCM connector. *Is it 10 – 14 V?*	Go to Step 2.	“WHT/RED” circuit open or shorted to ground.
2	**Check TCM power circuit** 1) Disconnect TCM connector with ignition switch OFF. 2) Check for proper connection to TCM at “C06-6” terminal. 3) If OK, turn ignition switch ON and check voltage at terminal “C06-6” of disconnected TCM connector. *Is it 10 – 14 V?*	Go to Step 4.	Go to Step 3.
3	**Check A/T relay operation** 1) Check A/T relay operation referring to “A/T Relay Inspection”. *Is check result satisfactory?*	“YEL/BLK”, “YEL/BLU”, “LT GRN/BLK” or “BLK” circuit for power supply open.	Replace A/T relay.
4	**Check TCM ground circuit** 1) Turn ignition switch OFF. 2) With TCM connectors disconnected, check for proper connection to TCM at “C06-1” / “C06-23” terminal. 3) If OK, check resistance between “C06-1” / “C06-23” terminal of disconnected TCM connector and body ground. *Is continuity indicated?*	TCM power and ground circuits are in good condition.	“BLK” circuit for TCM ground open.

Brake Interlock System Inspection

S7RW0A5104048

1) Check that select lever cannot be moved to any other range from “P” range position when ignition switch key is at ACC position, at LOCK position or it is removed from keyhole of ignition switch, or brake pedal is not depressed.

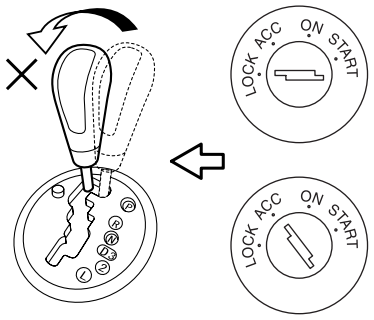

I4RS0A510047-01

2) Shift select lever to “P” range position, check for the following.
   - Ignition key can be turned between LOCK and ACC positions back and forth and also it can be removed from ignition switch.

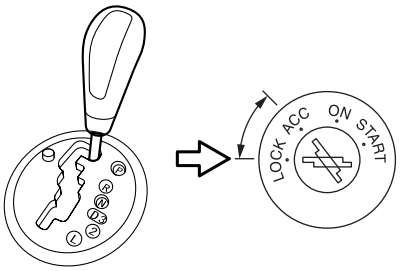

I4RS0A510048-01

- With shift lock solenoid release button (1) pushed and ignition key turned to ACC position, select lever can be shifted from “P” range position to any other range.
- With shift lock solenoid release button (1) pushed and ignition key turned to LOCK position, select lever can not be shifted from “P” range position to any other range.

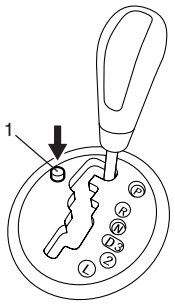

I4RS0A510049-01

- When ignition switch is turned ON and brake pedal is depressed, select lever can be shifted from “P” range position to any other range.

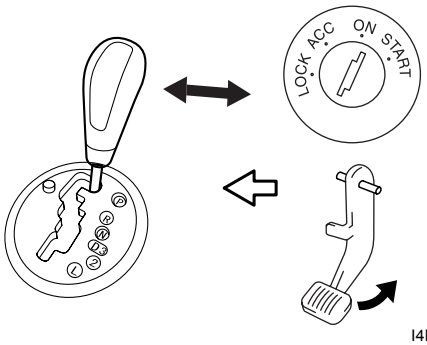

I4RS0A510050-01

3) With ignition lever shifted to any position other than “P” range, check that ignition key cannot be turned LOCK position and it cannot be removed from ignition switch unless it is at LOCK position.

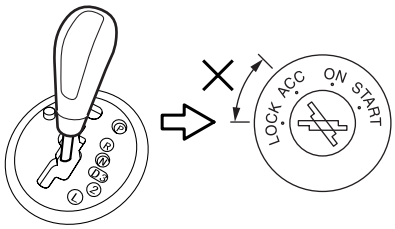

I4RS0A510051-01

Repair Instructions

Learning Control Initialization

S7RW0A5106001

1) Connect san tool to DLC (1) with ignition switch OFF.

Special tool
(A): SUZUKI scan tool (SUZUKI-SDT)

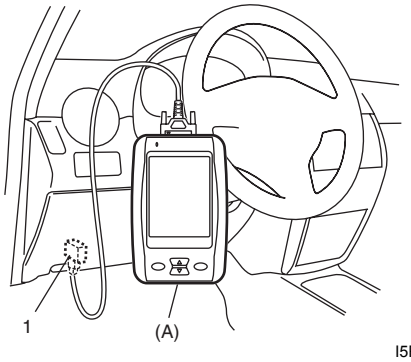

I5RW0C510072-01

2) Start engine and shift select lever to “P” range.
3) Select “Misc Test” mode on scan tool.
4) Perform “AT learned initialize” on scan tool.

A/T Fluid Level Check

S7RW0A5106002

⚠ CAUTION

Do not use any fluid other than the specified ATF. Use of any fluid other than the specified ATF may cause juddering or some other faulty condition to occur.

Level Check at Normal Operating (Hot) Temperature – Hot Check

1) Stop vehicle and place it level.
2) Apply parking brake and place chocks against wheels.
3) With select lever at “P” position, start engine.
4) Warm up engine till fluid temperature reaches normal operating temperature (70 – 80 °C / 158 – 176 °F). As a guide to check fluid temperature, warm up engine to normal operating.
5) Keep engine idling and shift select lever slowly to “L” and back to “P” position.
6) With engine idling, pull out fluid level gauge, wipe it off with a clean cloth and put it back into place.

7) Pull out fluid level gauge (1) again and check fluid level indicated on it. The lowest fluid level should be between FULL HOT (2) and LOW HOT (3). If it is below LOW HOT, add SUZUKI ATF 3317 or Mobil ATF 3309 up to FULL HOT.

Automatic transaxle fluid
SUZUKI ATF 3317 or Mobil ATF 3309

NOTE

- **Do not race engine while checking fluid level, even after the engine start.**
- **Do not overfill. Overfilling can cause foaming and loss of fluid through breather. Then slippage and transaxle failure can result.**
- **Bringing the level from LOW HOT to FULL HOT requires 0.4 liters (0.85 / 0.70 US/Imp. pt).**
- **If vehicle was driven under high load such as pulling a trailer, fluid level should be checked about half an hour after it is stopped.**

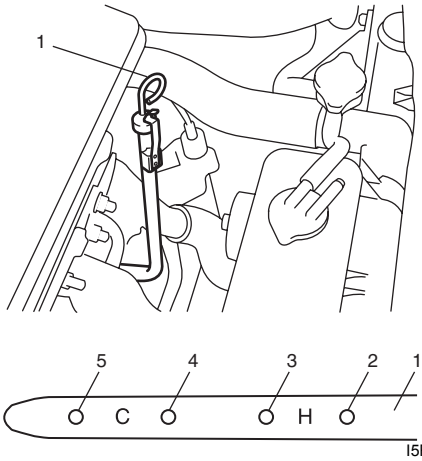

I5RW0C510027-01

4. “FULL COLD” mark	5. “LOW COLD” mark

Level Check at Room (Cold) Temperature – Cold Check

Fluid level can be checked temporarily at room (cold) temperature which correspond to 20 – 30 °C (68 – 86 °F). This level check is considered to be preparation before performing level check under normal operating (hot) temperature. Checking procedure itself is the same as that described in “Level Check at Normal Operating (Hot) Temperature – Hot Check: ”. If fluid level is between “FULL COLD” (4) and “LOW COLD” (5), proceed to test drive. And when fluid temperature has reached normal operating temperature, check fluid level again and adjust it as necessary.

⚠ CAUTION

Fluid level check at room (cold) temperature is recommended only for preparation of level check under normal (hot) operating condition.
Failure to perform fluid level check under normal (hot) operating temperature may result in damage to transaxle.

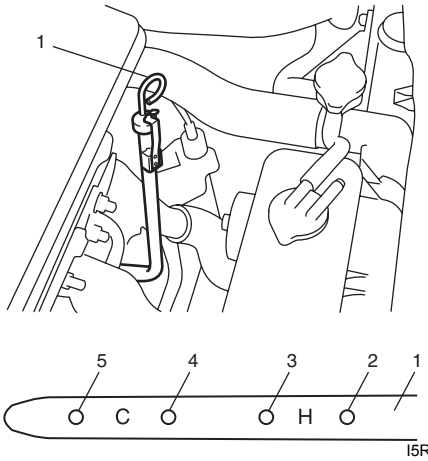

I5RW0C510027-01

1. Fluid level gauge	3. “LOW HOT” mark
2. “FULL HOT” mark	

A/T Fluid Change

S7RW0A5106003

⚠ CAUTION

Do not use any fluid other than the specified ATF. Use of any fluid other than the specified ATF may cause juddering or some other faulty condition to occur.

1) Lift up vehicle.
2) Remove left side engine under cover.
3) When engine is cool, remove drain plug (1) from oil pan (2) and drain A/T fluid.
4) Install drain plug (1).

Tightening torque
A/T fluid drain plug (a): 17 N·m (1.7 kgf-m, 12.5 lb-ft)

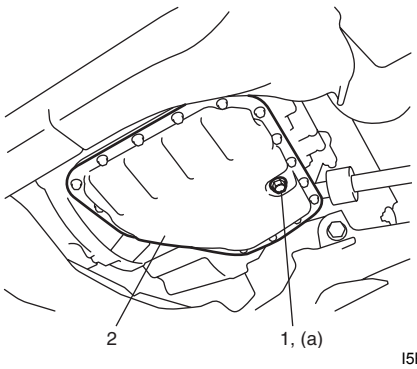

I5RW0C510029-02

5) Lower vehicle and pour proper amount of SUZUKI ATF 3317 or Mobil ATF 3309.
6) Check fluid level referring to “A/T Fluid Level Check”.

Automatic transaxle fluid
: SUZUKI ATF 3317 or Mobil ATF 3309

Automatic transaxle fluid capacity
When draining from drain plug hole: 2.6 liters (5.49 / 4.58 US/Imp. pt.)
When overhauling: 5.8 liters (12.26 / 10.21 US/ Imp. pt.)

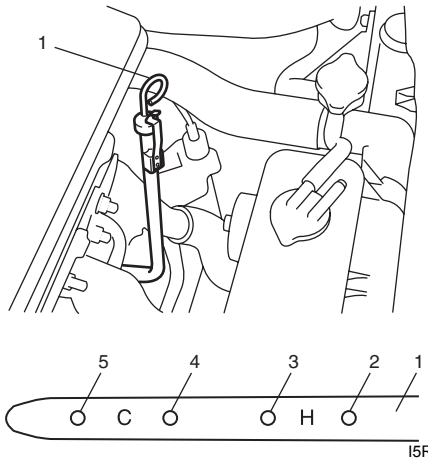

I5RW0C510027-01

1. Fluid level gauge	4. “FULL COLD” mark
2. “FULL HOT” mark	5. “LOW COLD” mark
3. “LOW HOT” mark	

Select Lever Components

S7RW0A5106004

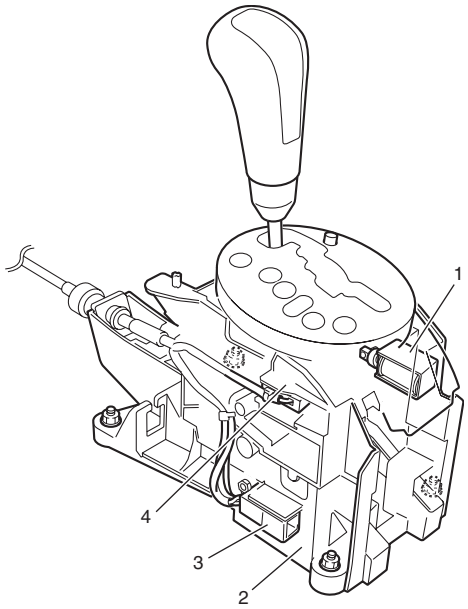

I5RW0C510028-04

1. Shift lock solenoid	3. Connector
2. Select lever assembly	4. “3” position switch

Select Lever Assembly Removal and Installation

S7RW0A5106005

Remove and install select lever referring to “Select Lever Components”.
When installing select lever nothing the following.

- After installing select lever assembly, adjust select cable referring to “Select Cable Adjustment”.

Select Lever Knob Installation

S7RW0A5106006

Screw select lever knob onto select lever by specified numbers of rotation below.

Rotation numbers for select lever knob installation
(a): 11 – 12 rotations

⚠ CAUTION

When installing select lever knob, do not turn more than specified numbers of rotation. Otherwise select lever knob is damaged.

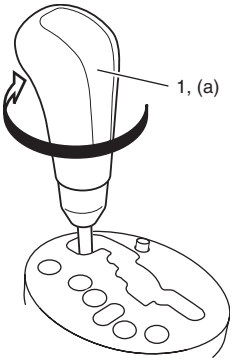

I5RW0C510030-01

Select Lever Inspection

S7RW0A5106007

Check select lever for smooth and clear-cut movement individually. If a malfunction is found, replace select lever assembly.

“3” Position Switch Inspection

S7RW0A5106008

1) Remove console box referring to “Console Box Components in Section 9H”.
2) Disconnect “3” position switch connector (1).
3) Check continuity between “3” position switch terminals.

“3” position switch specification
Shift select lever to “3” or “2” range: Continuity
Shift other above range: No continuity

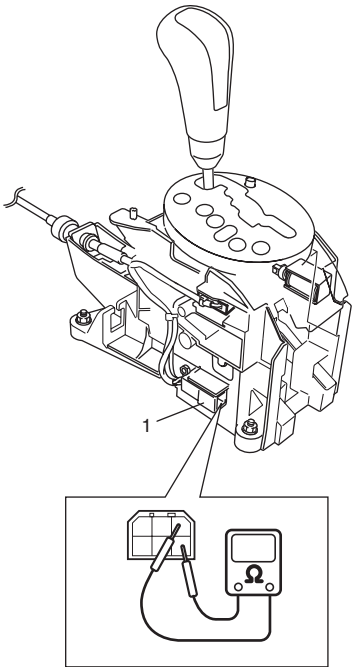

I5RW0C510037-02

Shift Lock Solenoid Inspection

S7RW0A5106009

Check that shift lock solenoid (1) actuate when battery voltage is conducted.

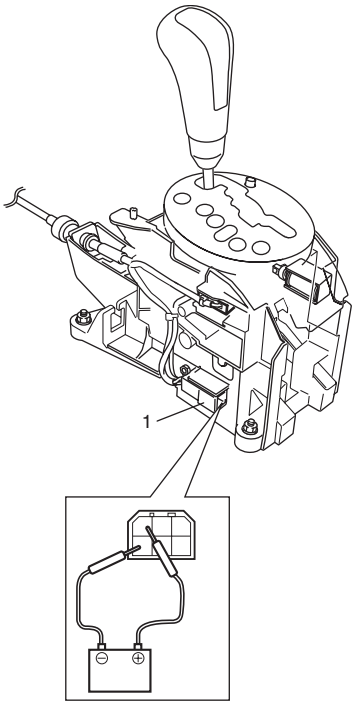

I5RW0C510043-02

Shift Lock Solenoid Replacement

S7RW0A5106010

1) Remove console box referring to “Console Box Components in Section 9H”.
2) Replace shift lock solenoid (1) using flat head or like.
3) Install covers as they were.

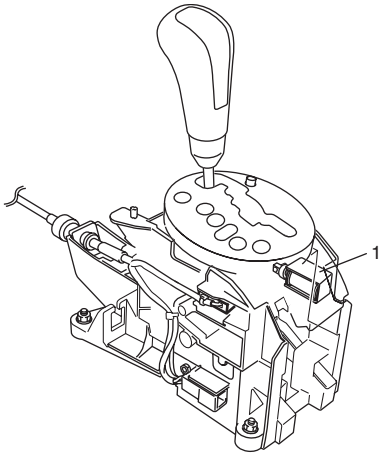

I5RW0C510044-01

Select Cable Components

S7RW0A5106011

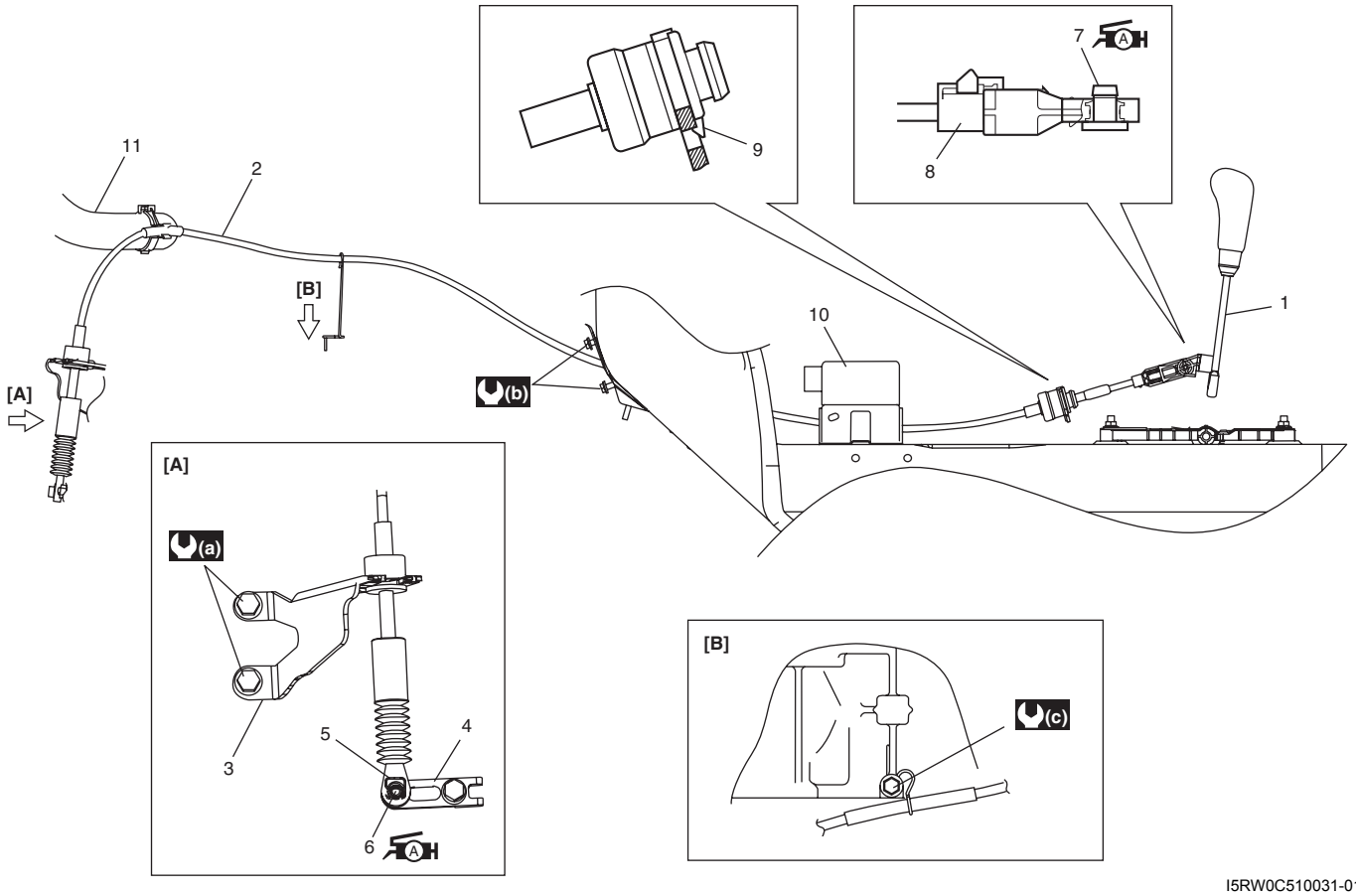

I5RW0C510031-01

[A]: View [A]	5. Clip	11. Radiator inlet hose
[B]: View [B]	6. Manual select lever pin : Apply lithium grease 99000-25011 to all around pin (0.15 g)	(a) : 23 N·m (2.0 kgf-m, 17.0 lb-ft)
1. Select lever assembly	7. Select lever pin : Apply lithium grease 99000-25011 to all around pin (0.15 g)	(b) : 6.5 N·m (0.65 kgf-m, 5.0 lb-ft)
2. Select cable	8. Adjuster case	(c) : 13 N·m (1.3 kgf-m, 9.5 lb-ft)
3. Cable bracket	9. Lock	
4. Manual select lever	10. P/S control module	

Select Cable Removal and Installation

S7RW0A5106012

Removal

1) Remove console box referring to “Console Box Components in Section 9H”.
2) Disconnect select cable from select lever and then detach from bracket.
3) Remove clip and disconnect select cable from manual select lever.
4) Remove select cable retainer from dash panel.

Installation

Install select cable by reversing removal procedure. The important steps in installation are as follows.

- Apply grease to pin and cable joint.
- Tighten bolts to specified torque referring to “Select Cable Components”.
- Adjusting procedure is as follows. Refer to “Select Cable Adjustment”.

Select Cable Adjustment

S7RW0A5106013

1) Shift manual shift lever to “N” range (transmission range sensor “N” range).

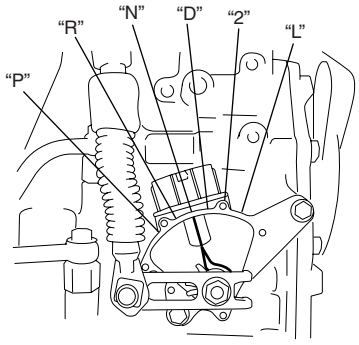

I2RH0B510040-01

2) Remove adjuster (cable end) from select lever pin of select lever assembly.
3) Remove adjuster (cable end) from select lever pin of select lever assembly.
4) Release lock plate (1) which restrict moving of cable end holder (2).

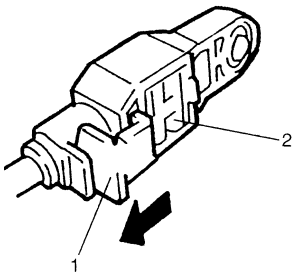

I2RH01510046-01

5) Push cable end holder (1) out from eye-end (2) using an appropriate tool (3) to disengage cable.

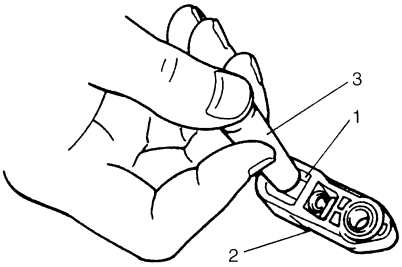

I2RH01510047-01

6) Shift select lever to “N” position.
7) Apply grease to select lever pin and install adjuster (cable end) to it.

   : Grease 99000–25011 (SUZUKI Super Grease A)

8) With both select lever and transmission range sensor kept each “N” position, drive cable end holder (1) in until it locks cable.
9) Slide lock plate (2) to secure cable end holder in position.

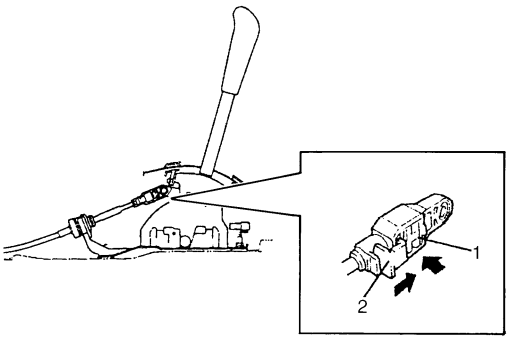

I3RM0B510037-01

10) After select cable was installed, check for the following.
    - Push vehicle with select lever shifted to “P” range. Vehicle should not move.
    - Vehicle can not be driven in “N” range.
    - Vehicle can be driven in “D”, “3”, “2” and “L” ranges.
    - Vehicle can be backed in “R” range.

Key Interlock Cable Removal and Installation

S7RW0A5106014

NOTE

Don’t bend interlock cable excessively when removing and installing it, or system will not operate correctly.

Removal

1) If the vehicle is equipped with air bag system, disconnect negative cable at battery and disable air bag system, referring to “Disabling Air Bag System in Section 8B”.
2) Remove steering column cover.
3) Turn ignition switch to ACC position.
4) Pull out key interlock cable (1) from key cylinder cover (2) while pressing checkhook with slotted screwdriver (3) or the like.

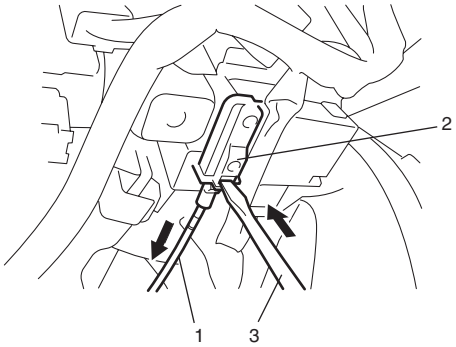

I5RW0C510045-01

5) Turn ignition switch to LOCK position.
6) Remove console box referring to “Console Box Components in Section 9H”.
7) Detach cable end (1) from interlock cam (2) while pressing claws (3) of interlock cam boss.
   At this time, be careful not to cause damage to its claws.
   Detach cable casing cap (4) from bracket (5) while pressing checkhook.
8) Remove interlock cable.

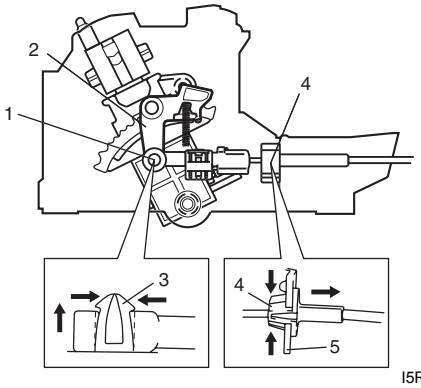

I5RW0C510046-01

Installation

1) Lay interlock cable to its original cabling route.

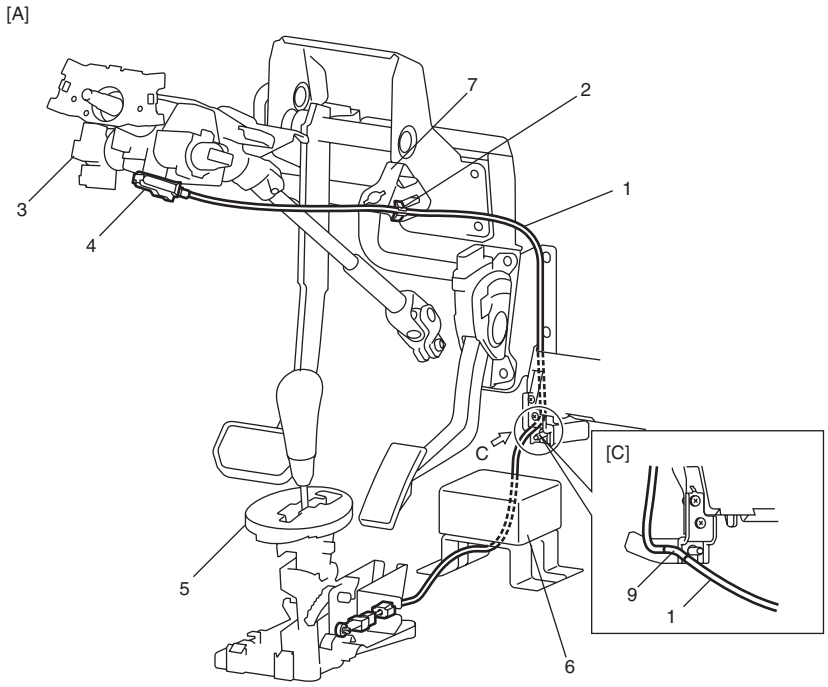

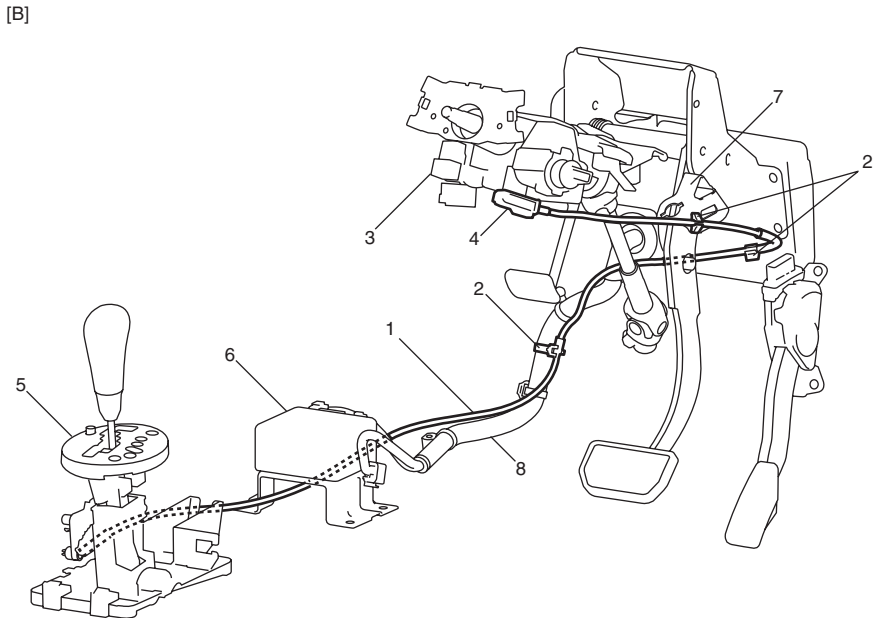

I5RW0C510073-01

[A]: LH steering vehicle	2. Clamp	6. EPS control module
[B]: RH steering vehicle	3. Steering lock assembly / Steering lock unit (if equipped with Keyless start system)	7. Brake switch bracket
[C]: View C	4. Key cylinder cover	8. Wiring harness
1. Key interlock cable	5. Select lever assembly	9. Marking

2) Turn ignition switch to ACC position.
3) Insert cable casing cap (1) into key cylinder cover (2) securely.

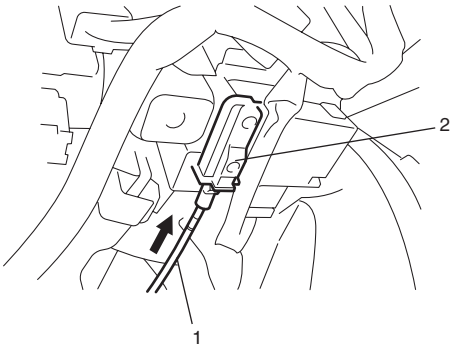

I5RW0C510047-01

4) Pull out lock button (1) of select lever side cable end (2).

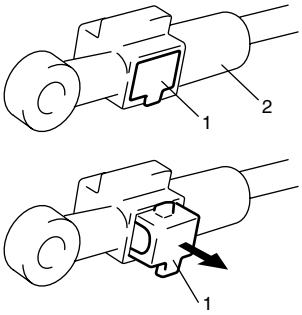

I2RH01510086-01

5) Shift select lever to “N” position.

NOTE

If select lever is in “P” position, shift select lever referring to “Select Lever Inspection”.

6) Install cable casing cap (3) to bracket (4).
7) Connect cable end (1) to interlock cam (2) with ignition switch turned to ACC position.
8) Drive lock button (5) in cable end until it locks cable expansion and contraction.

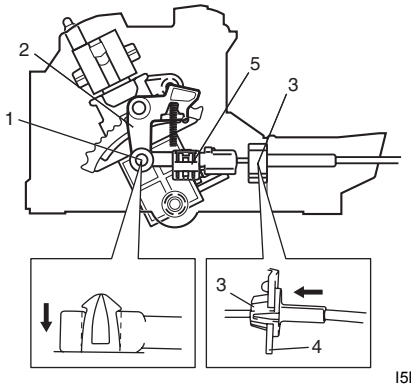

I5RW0C510048-01

9) With select lever set at “P” position, turn ignition key to ACC position and then check for the following conditions.
   - With knob button released, ignition key can be turned from ACC position to LOCK position.
   - With knob button pressed, ignition key cannot be turned from ACC position to LOCK position.
10) Install knee protector to steering column.
11) Install steering column cover.
12) If the vehicle is equipped with air bag system, connect negative cable at battery and enable air bag system, referring to “Enabling Air Bag System in Section 8B”.

Transmission Range Sensor Inspection and Adjustment

S7RW0A5106015

1) Shift manual select lever (4) to “N” range.
2) Check that needle direction shaped on lock washer (2) and “N” reference line (1) on transmission range sensor are aligned. If not, loosen sensor bolts (3) and align them.

   Tightening torque
   Transmission range sensor bolt (a): 5.5 N·m (0.55 kgf-m, 4.0 lb-ft)

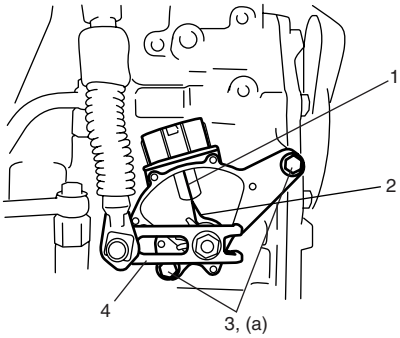

I2RH0B510041-01

3) Check that engine starts in “N” and “P” ranges but it doesn’t start in “D”, “2”, “L” or “R” range. Also, check that back-up lamp lights in “R” range.
If faulty condition cannot be corrected by adjustment, disconnect transmission range sensor connector and check that continuity exists as shown by moving manual select lever.

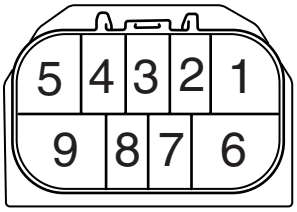

Sensor Position	Terminal No. 1	2	3	4	5	6	7	8	9
P	○		○			○			○
R		○	○						
N			○		○	○			○
D			○				○		
2			○	○					
L			○					○	

I3RH0A510038-01

Output Shaft Speed Sensor (VSS) Removal and Installation

S7RW0A5106016

Removal

1) Disconnect negative cable at battery.
2) Disconnect output shaft speed sensor connector (2).
3) Remove output shaft speed sensor (VSS) (1) by removing its bolt.

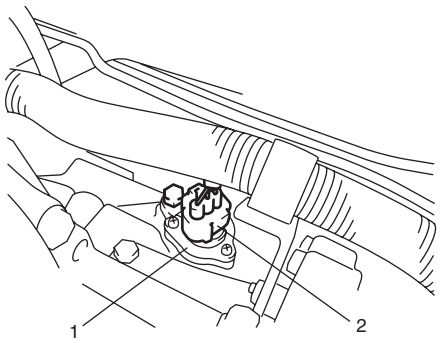

I5RW0C510032-01

Installation

1) Apply A/T fluid to output shaft speed sensor O-ring.
2) Install output shaft speed sensor (VSS) (1) to A/T case and tighten bolt to specified torque.

Tightening torque
Output shaft speed sensor (VSS) bolt (a): 13 N·m (1.3 kgf-m, 9.5 lb-ft)

3) Connect output shaft speed sensor connector (2) to output shaft speed sensor (VSS) (1).

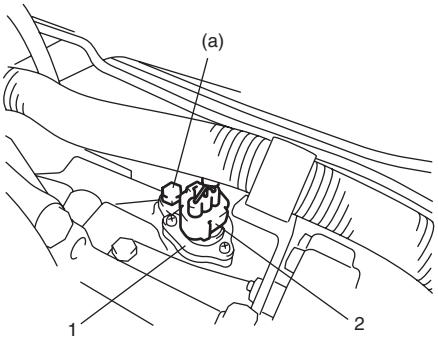

I5RW0C510033-01

4) Connect negative cable to battery.

Output Shaft Speed Sensor (VSS) Inspection

S7RW0A5106017

1) Connect positive cable of 12 volt battery to “A” terminal of sensor and ground cable to “C” terminal. Then using voltmeter, check voltage between “B” terminal and “C” terminal with output shaft speed sensor (VSS) driven gear rotated.
If measured voltage (pulse signal) is not as specified, replace sensor.

Output shaft speed sensor (VSS) output voltage
Pulse signal of alternating 0 – 1 V and 10 – 14 V

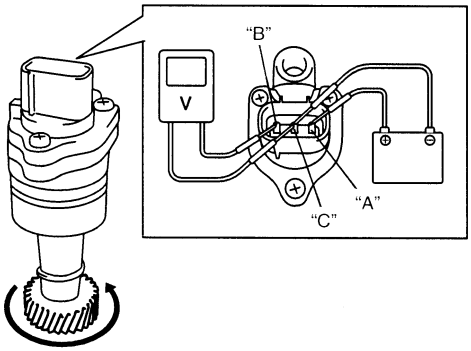

I2RH0B510045-01

2) Check output shaft speed sensor (VSS) driven gear (1) for wear.
Replace if necessary.

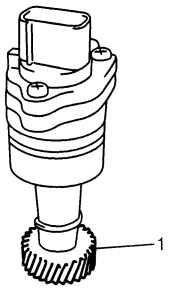

I2RH0B510046-01

Input Shaft Speed Sensor Removal and Installation

S7RW0A5106018

Removal

1) Disconnect negative cable at battery.
2) Disconnect input shaft speed sensor connector (2).
3) Remove input shaft speed sensor (1) by removing its bolt.

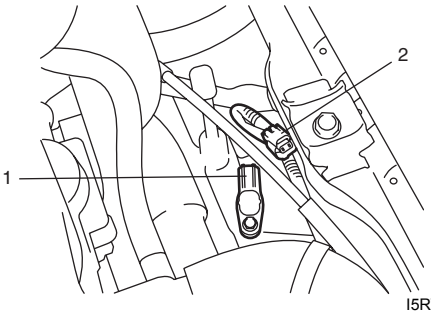

I5RW0C510034-01

Installation

1) Apply A/T fluid to input shaft speed sensor O-ring.
2) Install input shaft speed sensor (1) to A/T case and tighten bolt to specified torque.

   Tightening torque
   Input shaft speed sensor bolt (a): 5.5 N·m (0.55 kgf-m, 4.0 lb-ft)

3) Connect input shaft speed sensor connector (2) to input shaft speed sensor (1).

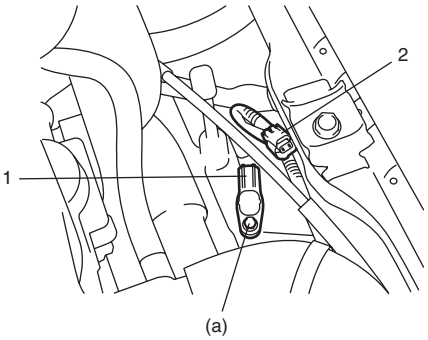

I5RW0C510035-01

4) Connect negative cable to battery.

Input Shaft Speed Sensor Inspection

S7RW0A5106019

1) Disconnect negative cable at battery.
2) Disconnect input shaft speed sensor connector (2).
3) Check resistance between input shaft speed sensor (1) terminals.

   <u>Input shaft speed sensor resistance</u>
   Standard: 560 – 680 Ω at 20 °C (68 °F)

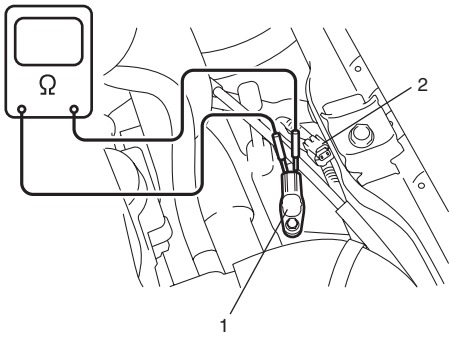

I5RW0C510036-01

Transmission Fluid Temperature Sensor Removal and Installation

S7RW0A5106020

Removal

1) Disconnect negative cable at battery.
2) Lift up vehicle.
3) Remove left side engine under cover.
4) With engine is cool, remove drain plug and drain A/T fluid.
5) Install drain plug. Refer to “A/T Fluid Change”.
6) Remove A/T oil pan.
7) Remove oil strainer assembly.
8) Remove valve body assembly referring to “Automatic Transaxle Unit Disassembly”.

⚠ CAUTION

When pulling valve body harness out of transaxle case, take care not to damage transmission fluid temperature sensor at narrow exit of case.
Careless sensor treatment might cause sensor malfunction.

9) Remove valve body harness (1).

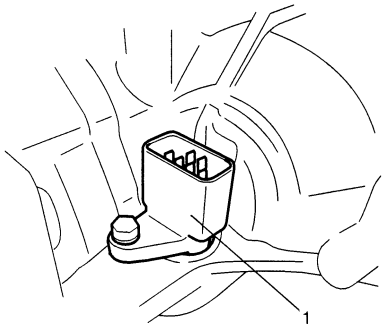

I2RH0B510050-01

Installation

Reverse removal procedure to install valve body harness and valve body assembly noting the following points.

- For details of valve body assembly and their connectors installation, refer to “Automatic Transaxle Unit Assembly”.
- For details of A/T oil pan installation, refer to “Automatic Transaxle Unit Assembly”. Use new oil pan gasket.
- Tighten valve body harness connector bolt to specified torque.

  Tightening torque
  Valve body harness connector bolt (a): 5.5 N·m (0.55 kgf-m, 4.0 lb-ft)

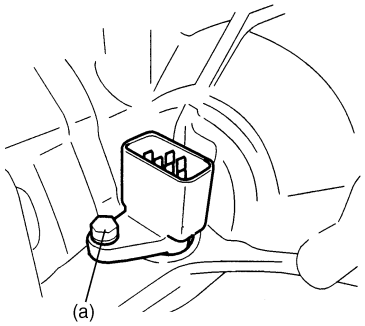

I2RH0B510051-01

- Pour A/T fluid and check fluid level according to procedure described in “A/T Fluid Change”.
- Check for fluid leakage after warming up A/T.

Transmission Fluid Temperature Sensor Inspection

S7RW0A5106021

Warm up transmission fluid temperature sensor (2). Check resistance between terminals of valve body harness connector (1). Thus make sure its resistance decrease as its temperature increase.

Transmission fluid temperature sensor resistance
10 °C (50 °F): 5.8 – 7.1 kΩ
110 °C (230 °F): 231 – 263 Ω
145 °C (293 °F): 105 – 117 Ω

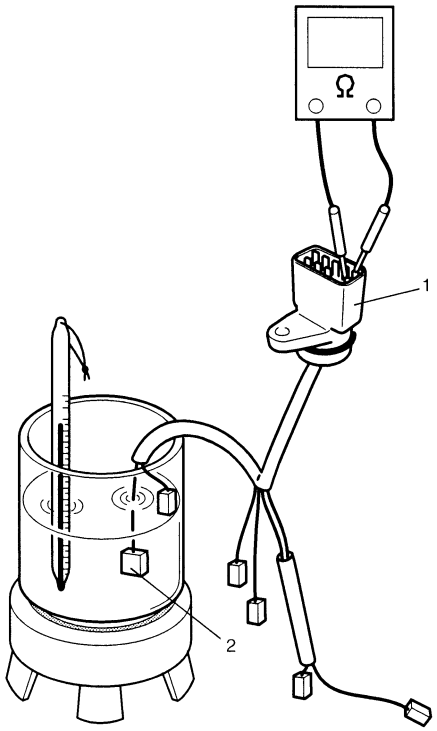

I2RH0B510052-01

Solenoid Valves (Shift Solenoid Valves and Timing Solenoid Valve) Removal and Installation

S7RW0A5106022

Removal

1) Disconnect negative cable at battery.
2) Lift up vehicle.
3) Remove left side engine under cover.
4) Remove drain plug and drain A/T fluid.
5) Install drain plug.

   Tightening torque
   A/T fluid drain plug: 17 N·m (1.7 kgf-m, 12.5 lb-ft)

6) Remove A/T oil pan (1) and oil pan gasket (2).
7) Remove oil strainer assembly (3).

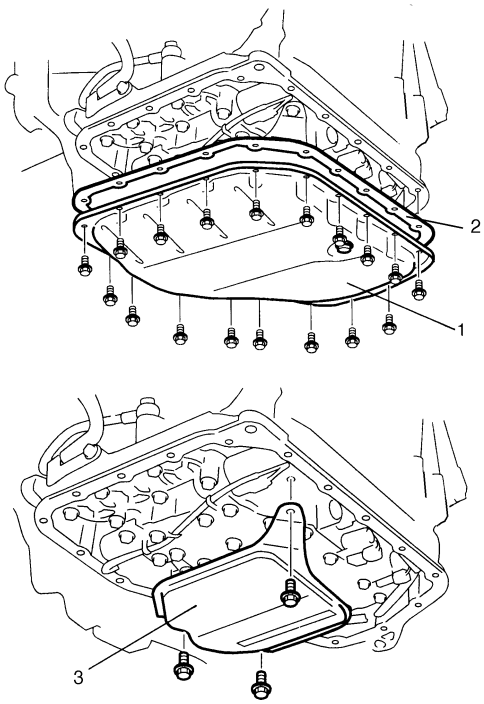

I2RH0B510054-01

8) Remove transmission fluid temperature sensor (1) from sensor clamp.
9) Disconnect solenoid connectors (2).

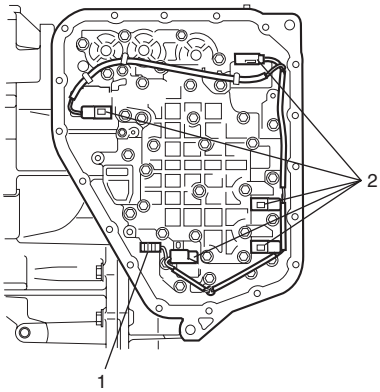

I5RW0C510038-02

10) Remove shift solenoid valve-A (No.1) (1), shift solenoid valve-B (No.2) (2) and timing solenoid valve (3) by removing bolts.

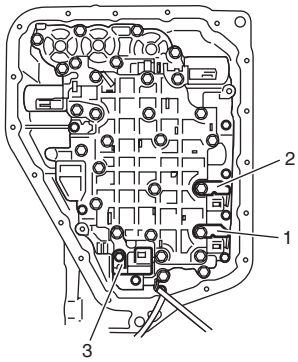

I4RS0A510028-01

Installation

1) Install shift solenoid valve-A (No.1) (1), shift solenoid valve-B (No.2) (2) and timing solenoid valve (3).

Tightening torque
Shift solenoid bolt (a): 11 N·m (1.1 kgf-m, 8.0 lb-ft)

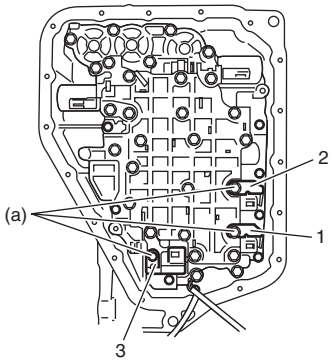

I4RS0A510029-01

2) Connect solenoid connectors identifying their installing positions by wire color.

Solenoid coupler	Wire color
Shift solenoid valve-A (No.1) (2)	White
Shift solenoid valve-B (No.2) (3)	Black
Timing solenoid valve (1)	Yellow
TCC pressure control solenoid valve (4)	Light green / Brown
Pressure control solenoid valve (5)	Green / Gray

3) Install transmission fluid sensor (6) and sensor wire to clamp.

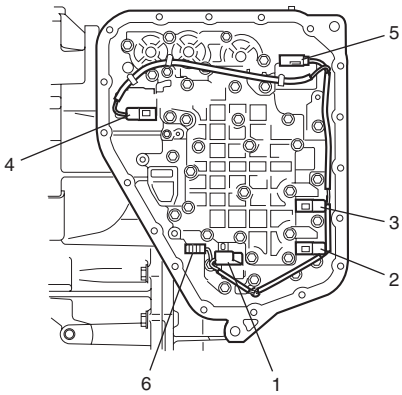

I5RW0C510039-02

4) Install oil strainer assembly (1).

Tightening torque
Oil strainer bolt (a): 10 N·m (1.0 kgf-m, 7.5 lb-ft)

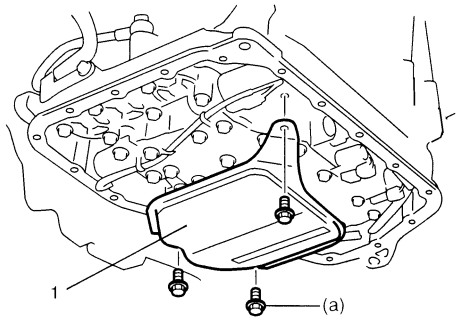

I2RH0B510059-01

5) Install new oil pan gasket (1) and oil pan (2).
6) Tighten oil pan bolts to specified torque diagonally and little by little.

Tightening torque
Oil pan bolt (b): 7.0 N·m (0.7 kgf-m, 5.0 lb-ft)

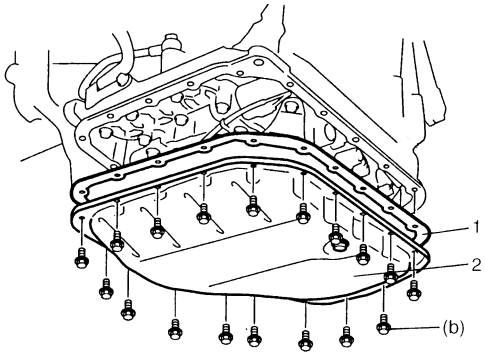

I2RH0B510060-01

7) Install left side engine under cover.
8) Lower vehicle.
9) Connect negative cable at battery.

Solenoid Valves (Shift Solenoid Valves and Timing Solenoid Valve) Inspection

S7RW0A5106023

Resistance Check
Check shift solenoid valves and timing solenoid valve.

Shift solenoid valves and timing solenoid valve resistance
Standard: 11 – 15 Ω at 20 °C (68 °F)

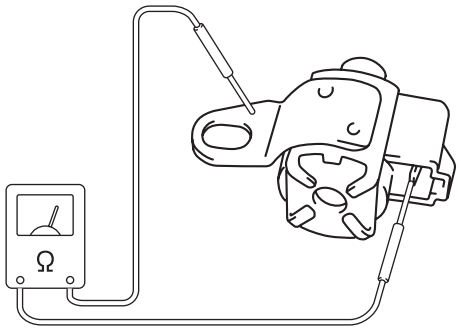

I2RH0B510061-01

Operation Check
Shift solenoid valve-A (No.1) and -B (No.2)

⚠ CAUTION

- **Do not insert air gun against strainer installed on inlet of solenoid valve too deeply, when blowing air into solenoid valve. If not, the strainer will be damaged.**
- **Be very careful as dust etc. does not enter when solenoid valves are inspected.**

- Check that solenoid valve (1) actuate with click sound when battery voltage is conducted.
- When solenoid valve (1) is connected to battery (2), confirm that solenoid valve is close condition by blowing air (50 – 200 kPa, 0.5 – 2.0 kg/cm^2, 7 – 28.5 psi) into solenoid valve as shown in figure.
- When solenoid valve (1) is not connected to battery (2), confirm that solenoid valve is open condition by blowing air (50 – 200 kPa, 0.5 – 2.0 kg/cm^2, 7 – 28.5 psi) into solenoid valve as shown in figure.

NOTE

Do not fail to inspect with air to prevent mistaken checking because return spring for valve is not installed into solenoid valve.

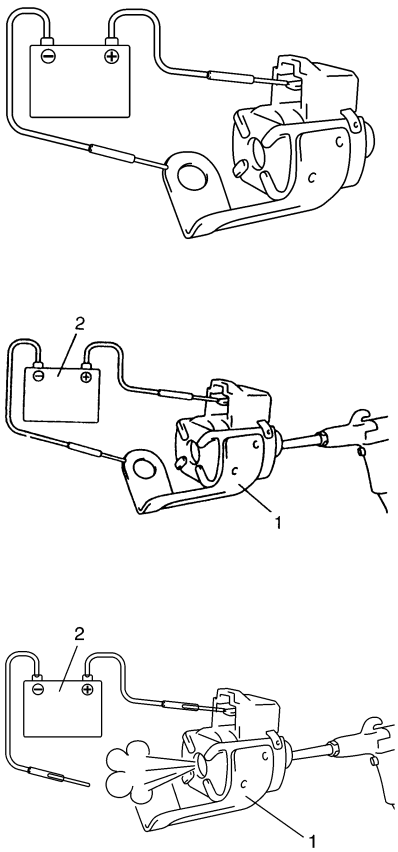

I2RH0B510062-01

Timing solenoid valve

⚠ CAUTION

- **Do not insert air gun against strainer installed on inlet of solenoid valve too deeply, when blowing air into solenoid valve. If not, the strainer will be damaged.**
- **Be very careful as dust etc. does not enter when solenoid valves are inspected.**

- Check that solenoid valve (1) actuate with click sound when battery voltage is conducted.
- When timing solenoid valve (1) is connected to battery (2), confirm that timing solenoid valve is open condition by blowing air (50 – 200 kPa, 0.5 – 2.0 kg/cm^2, 7 – 28.5 psi) into solenoid valve as shown in figure.
- When timing solenoid valve (1) is not connected to battery (2), confirm that timing solenoid valve is close condition by blowing air (50 – 200 kPa, 0.5 – 2.0 kg/cm^2, 7 – 28.5 psi) into solenoid valve as shown in figure.

NOTE

Do not fail to inspect with air to prevent mistaken checking because return spring for valve is not installed into solenoid valve.

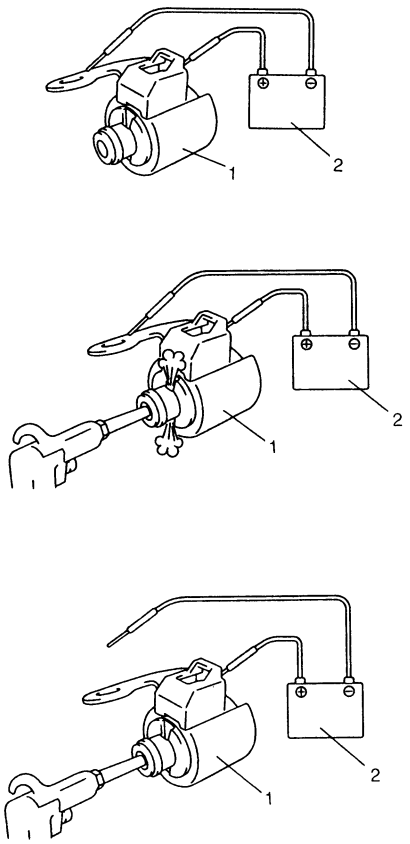

I2RH0B510063-01

Pressure Control Solenoid Valves (Pressure Control Solenoid and TCC Solenoid) Removal and Installation

S7RW0A5106024

Removal

1) Disconnect negative cable at battery.
2) Lift up vehicle.
3) Remove left side engine under cover.
4) Remove drain plug and drain A/T fluid.
5) Install drain plug.

Tightening torque
A/T fluid drain plug: 17 N·m (1.7 kgf-m, 12.5 lb-ft)

6) Remove A/T oil pan (1) and oil pan gasket (2).
7) Remove oil strainer assembly (3).

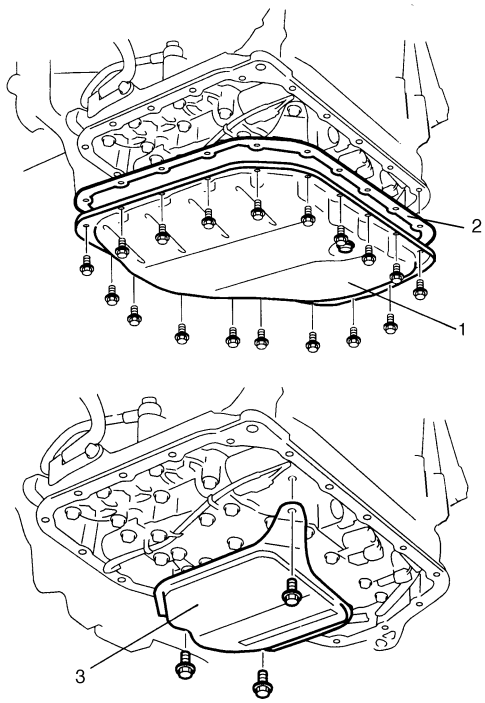

I2RH0B510054-01

8) Remove transmission fluid temperature sensor (1) from sensor clamp.
9) Disconnect solenoid connectors (2).

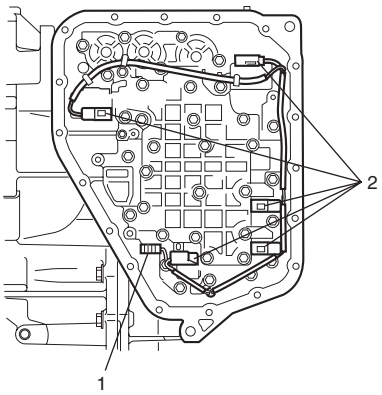

I5RW0C510038-02

10) Remove valve body assembly referring to "Automatic Transaxle Unit Disassembly".
11) Remove pressure control solenoid valve and TCC pressure control solenoid valve referring to "Valve Body Assembly Disassembly and Reassembly".

Installation

Reverse removal procedure to install pressure control solenoid valve and valve body assembly noting the following points.

- For detail of pressure control solenoid valve and TCC pressure control solenoid valve installation, refer to "Valve Body Assembly Disassembly and Reassembly".
- For detail of valve body assembly installation, refer to "Automatic Transaxle Unit Assembly".
- For detail of installing wire harness for solenoid valves and sensor, refer to "Automatic Transaxle Unit Assembly". Use new O-rings.
- For detail of A/T oil pan and oil strainer assembly installation, refer to "Automatic Transaxle Unit Assembly". Use new oil pan gasket.
- Pour A/T fluid and check fluid level according to procedure described in "A/T Fluid Change".
- Check for fluid leakage after warming up A/T.

Pressure Control Solenoid Valves Inspection

S7RW0A5106025

⚠ CAUTION

- **Be very careful as dust etc. does enter when pressure control solenoid valves are inspected.**

Resistance Check

Measure resistance between pressure control solenoid valves (Pressure control solenoid and TCC pressure control solenoid) (1) terminals.

Pressure control solenoid valve and TCC pressure control solenoid valve resistance

Standard: 5.0 – 5.6 Ω at 20 °C (68 °F)

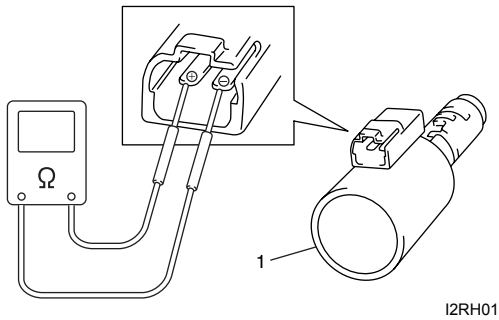

I2RH01510071-01

Operation Check

Check pressure control solenoid valves (Pressure control solenoid and TCC pressure control solenoid) operation in the either manner of the following.

Using regulated DC power supply

1) Connect pressure control solenoid valve (1) with regulated DC power supply (2) as shown in figure.
2) Turn regulated DC power supply switch ON and increase voltage of power supply keeping current within 1.0 A.
3) Check for gradual movement of valve (3) in the direction of arrow "A" as voltage is increased.
4) Check movement of valve (3) in the direction of arrow "B" as voltage is decreased.
5) Turn power supply switch OFF.

⚠ CAUTION

Do not pass current 1.0 A or more, or pressure control solenoid is burned out.

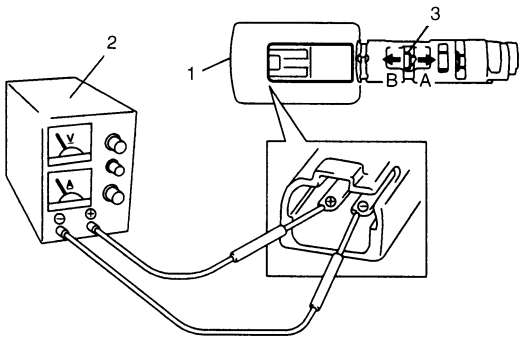

I2RH0B510064-01

Not using regulated DC power supply

1) Connect pressure control solenoid valve (1) to battery (2) setting 21 W bulb (4) on the way as shown in figure.
2) Check for movement of valve (3) in the direction of arrow “A”.
3) Disconnect pressure control solenoid valve (1) from battery (2) and check movement of valve (3) in the direction of arrow “B” as shown in figure.

⚠ CAUTION

Set 21 W bulb on the way, or pressure control solenoid valve is burned out.

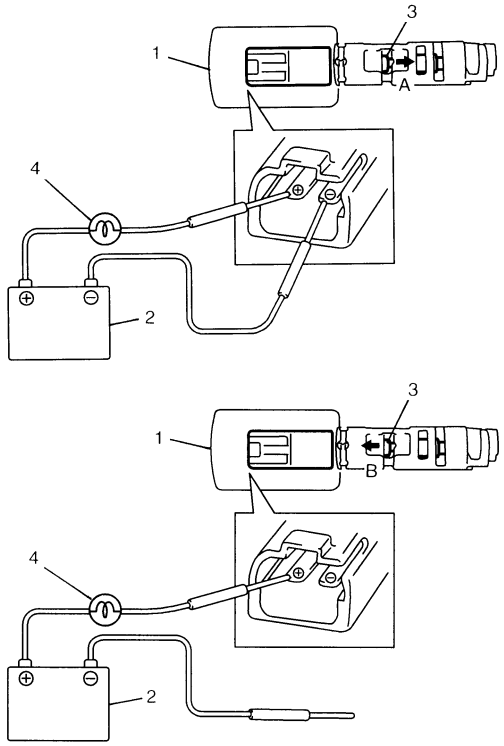

I4RS0A510031-01

Transmission Control Module (TCM) Removal and Installation

S7RW0A5106026

⚠ CAUTION

- **TCM and ECM consists of highly precise parts, therefore when handling it, be careful not to expose to excessive shock.**
- **When replacing TCM with used one, all learned contents, which have been stored in TCM memory by executing learning control, should be initialized after replacement.**

Removal

1) Disconnect negative cable at battery.
2) If the vehicle is equipped with air bag system, disable air bag system. Refer to “Disabling Air Bag System in Section 8B”.
3) Disconnect connectors from TCM (1).
4) Remove TCM by removing its nuts.

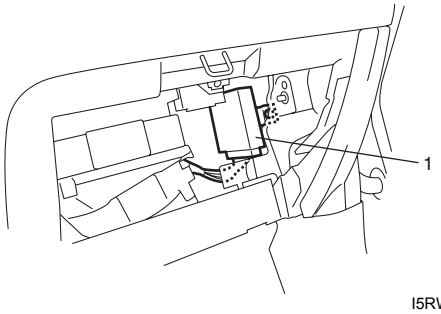

I5RW0C510040-01

Installation

Reverse removal procedure noting the following.

- Connect TCM connectors securely.
- If the vehicle is equipped with air bag system, be sure to enable air bag system after TCM is back in place. Refer to “Enabling Air Bag System in Section 8B”.

A/T Relay Inspection

S7RW0A5106027

1) Disconnect negative cable at battery.
2) Remove A/T relay (2) from fuse and relay box (1).
3) Check that there is no continuity between terminal “C” and “D”.
   If continuity is indicated, replace A/T relay.
4) Connect battery positive (+) terminal to terminal “A” of A/T relay and battery negative (–) terminal to terminal “B” of A/T relay.
   Check continuity between terminal “C” and “D” of A/T relay.
   If continuity does not indicated, replace A/T relay.

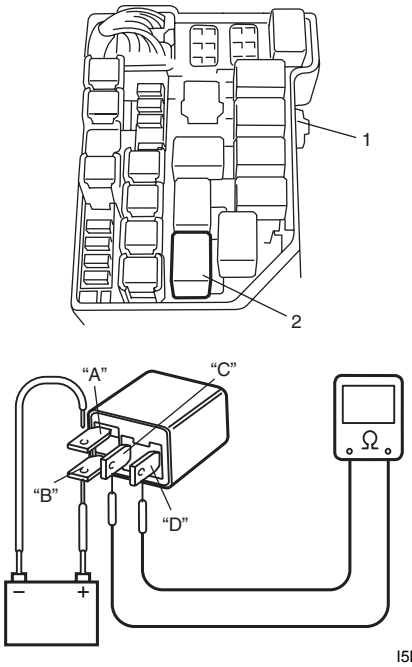

I5RW0C510041-02

Differential Side Oil Seal Replacement

S7RW0A5106028

1) Lift up vehicle and drain automatic transaxle fluid.
2) Remove drive shaft assembly and center shaft referring to “Front Drive Shaft Assembly Removal and Installation: Front in Section 3A”.
3) Remove differential side oil seal (1) by using special tool.

   Special tool
   (A): 09913–50121

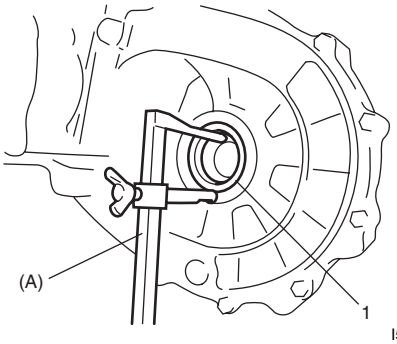

I5RW0A520006-02

4) Apply grease to new differential side oil seal lips.

   : Grease 99000–25030 (SUZUKI Super Grease C)

5) Install new differential side oil seals (1) by using special tool.

   Special tool
   (A): 09913–75510
   (B): 09913–75810

   <u>Differential side oil seal installing depth</u>
   Right side “a”: 13.2 – 14.2 mm (0.52 – 0.56 in.)
   Left side “b”: 3.8 – 4.8 mm (0.15 – 0.19 in.)

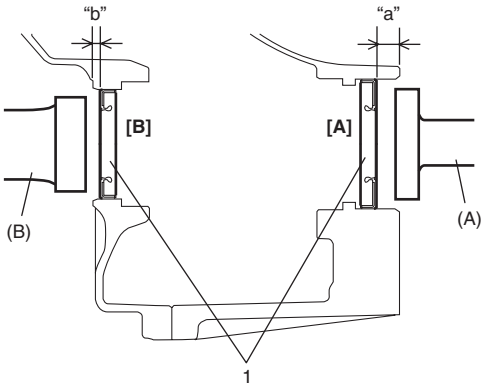

I5RW0C510042-01

[A]: Right side	[B]: Left side

6) Insert drive shaft assembly and center shaft referring to “Front Drive Shaft Assembly Removal and Installation: Front in Section 3A”.
7) Pour A/T fluid referring to “A/T Fluid Change”.

A/T Fluid Cooler Hoses Replacement

S7RW0A5106029

The rubber hoses for the A/T fluid cooler should be checked at specified interval. If replacing them, be sure to note the following.

- to replace clamps at the same time
- to insert hose as far as its limit mark
- to clamp clamps securely

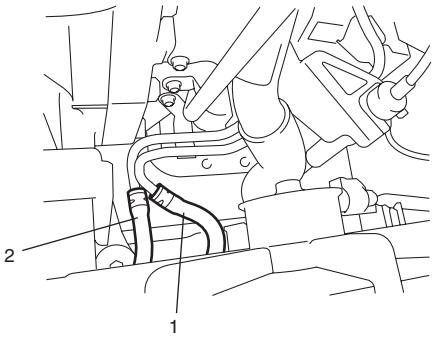

I5RW0C510049-01

1.	Inlet hose (Outlet from A/T fluid cooler)
2.	Outlet hose (Inlet to A/T fluid cooler)

Automatic Transaxle Unit Components

S7RW0A5106030

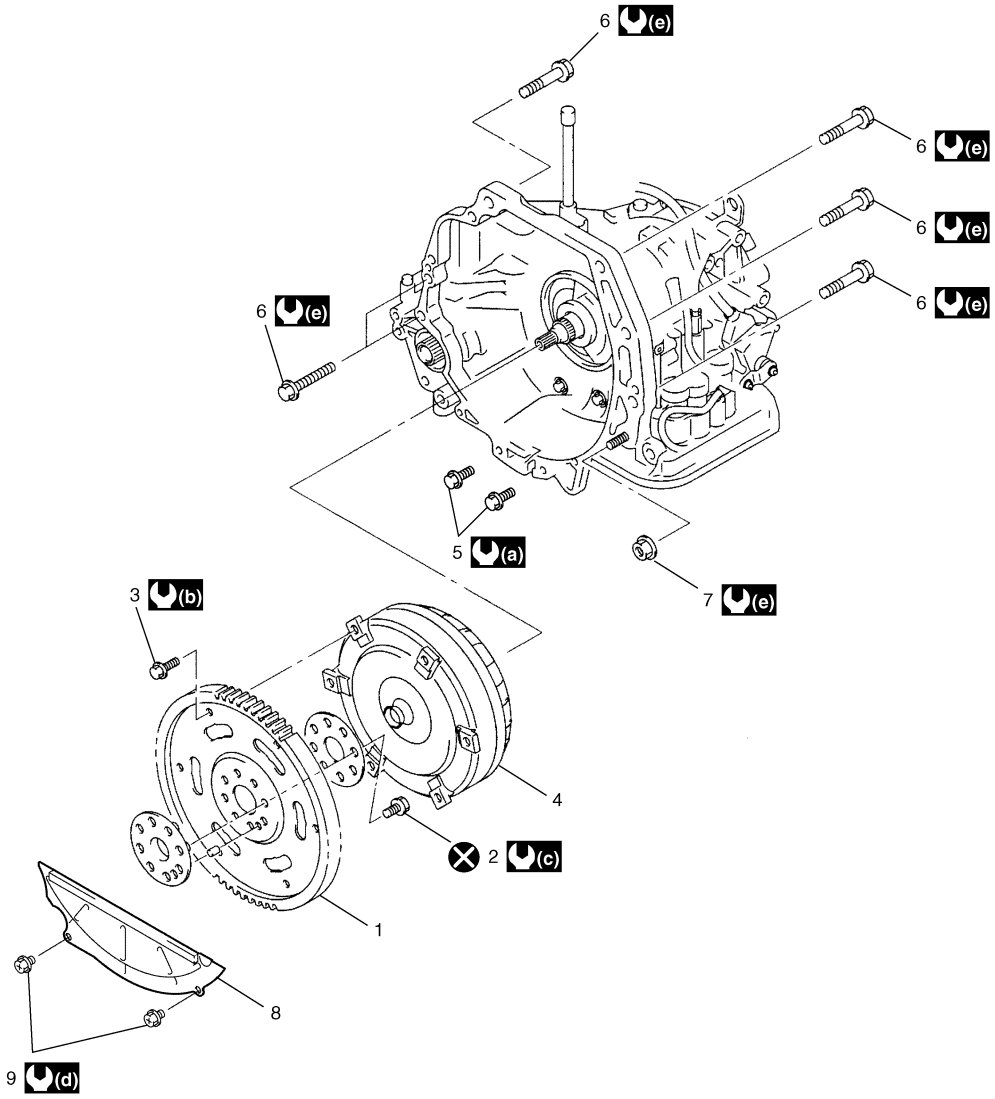

I5RW0C510050-01

1. Drive plate	6. Transaxle and engine fastening bolt	(b) : 19 N·m (1.9 kgf-m, 14.0 lb-ft)
2. Drive plate bolt	7. Transaxle and engine fastening nut	(c) : 69 N·m (6.9 kgf-m, 50.0 lb-ft)
3. Drive plate to torque converter bolt	8. Transaxle housing lower plate	(d) : 11 N·m (1.1 kgf-m, 8.0 lb-ft)
4. Torque converter	9. Transaxle housing lower plate bolt	(e) : 85 N·m (8.5 kgf-m, 61.5 lb-ft)
5. Engine oil pan bolt	(a) : 55 N·m (5.5 kgf-m, 40.0 lb-ft)	

Automatic Transaxle Unit Dismounting and Remounting

S7RW0A5106031

Dismounting

1) Take down transaxle with engine. For its procedure, refer to “Engine Assembly Removal and Installation in Section 1D”.
2) Remove transaxle housing lower plate (1).

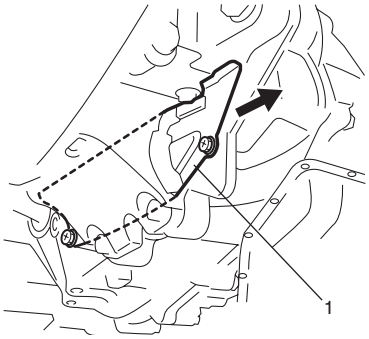

I5RW0C510051-01

3) Remove drive plate to torque converter bolts (1) engage flat head rod or the like (2) with drive plate ring gear.

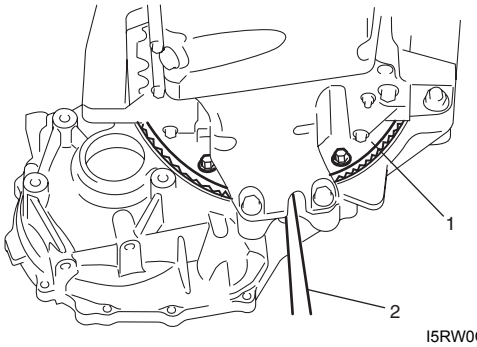

I5RW0C510052-01

4) Remove starting motor.
5) Remove bolts and nut fastening engine and transaxle, then detach transaxle from engine.

⚠ WARNING

Be sure to keep transaxle with torque converter horizontal or facing up throughout the work. Should it be tilted with torque converter down, converter may fall off and cause personal injury.

NOTE

When detaching transaxle from engine, move it in parallel with crankshaft and use care so as not to apply excessive force to drive plate and torque converter.

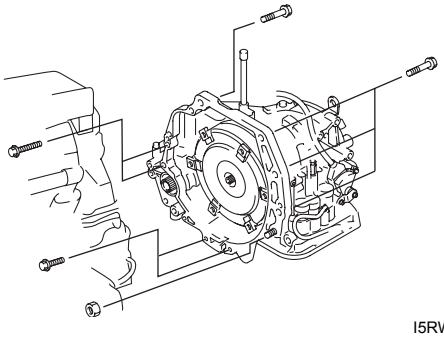

I5RW0C510053-01

Remounting

1) Make sure that torque converter is installed correctly to transaxle.
   Refer to “Automatic Transaxle Unit Assembly”.
2) Attach transaxle to engine. Tighten engine oil pan bolts (1) to specified torque.

⚠ WARNING

Be sure to keep transaxle with torque converter horizontal or facing up throughout the work. Should it be tilted with torque converter down, converter may fall off and cause personal injury.

Tightening torque
Engine oil pan bolt (a): 55 N·m (5.5 kgf-m, 40.0 lb-ft)
Transaxle and engine fastening bolt (b): 85 N·m (8.5 kgf-m, 61.5 lb-ft)
Transaxle and engine fastening nut (c): 85 N·m (8.5 kgf-m, 61.5 lb-ft)

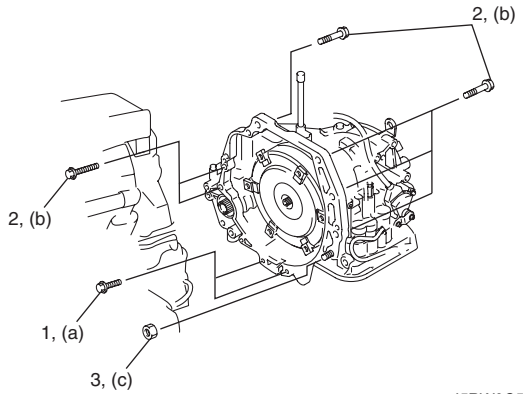

I5RW0C510054-01

3) Tighten drive plate to torque converter bolts. Align bolt hole of drive plate and torque converter then tighten bolts through torque converter housing lower plate opening.
   Lock drive plate (1) by engaging flat head rod or the like (2) with drive plate gear.

   Tightening torque
   Drive plate to torque converter bolt (a): 19 N·m (1.9 kgf-m, 14.0 lb-ft)

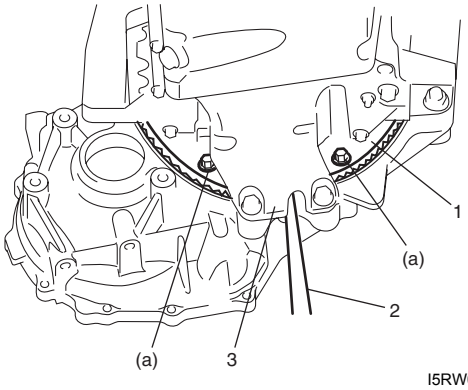

I5RW0C510055-01

3. Engine oil pan

4) Install transaxle housing lower plate (1).

   Tightening torque
   Transaxle housing lower plate bolt (a): 11 N·m (1.1 kgf-m, 8.0 lb-ft)

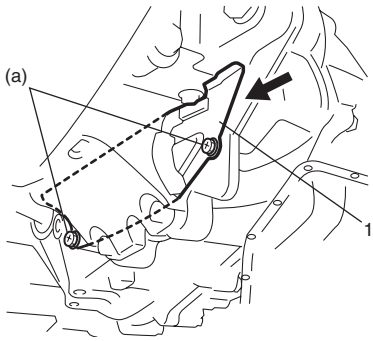

I5RW0C510056-01

5) Install starter motor referring to “Starting Motor Dismounting and Remounting in Section 1I”.
6) Remount engine with transaxle assembly to vehicle. Refer to “Engine Assembly Removal and Installation in Section 1D” for its procedure.

Automatic Transaxle Assembly Components

S7RW0A5106032

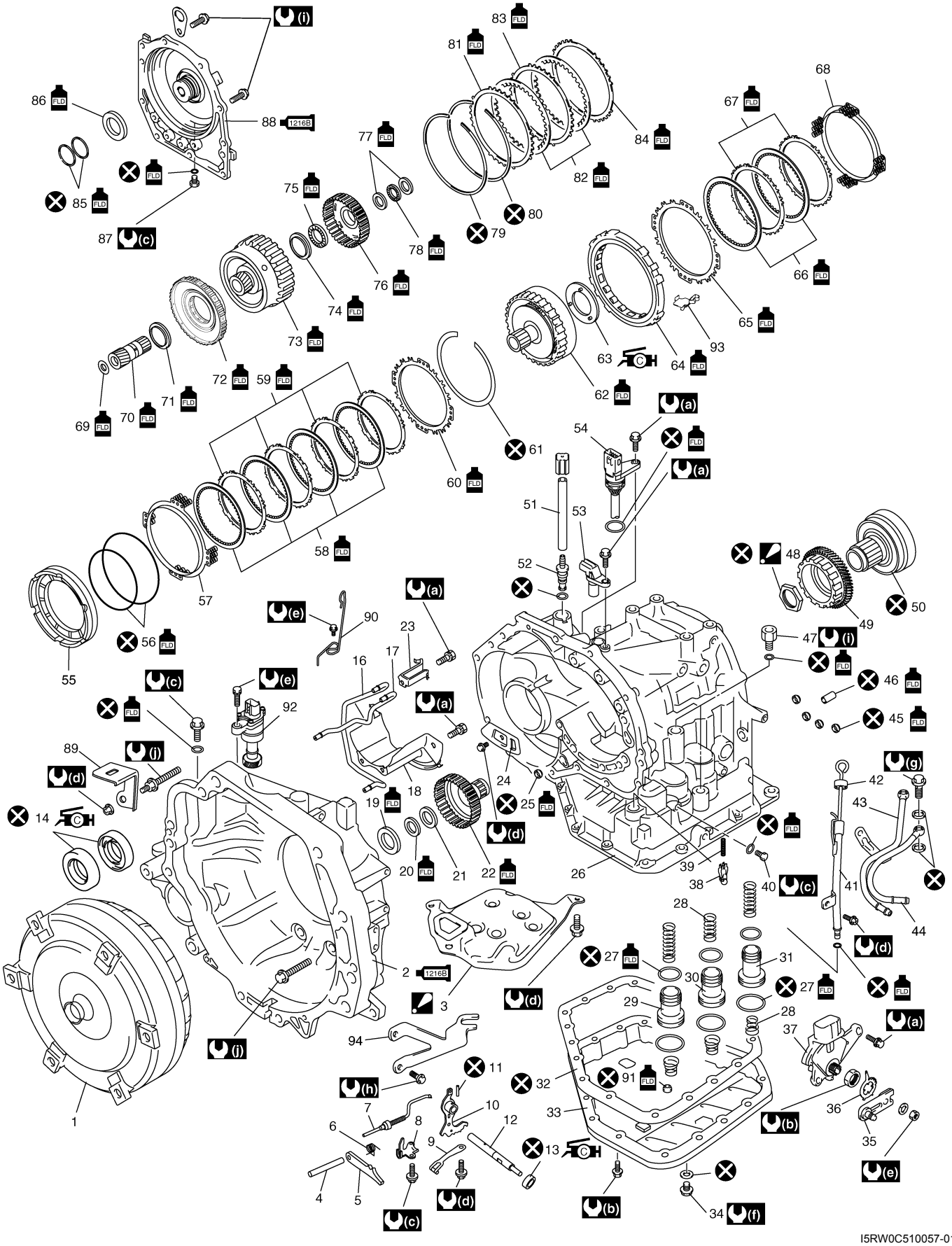

I5RW0C510057-01

1. Torque converter	37. Transmission range sensor	73. Rear planetary sun gear subassembly
1216B 2. Torque converter housing : Apply sealant 99000-31230 to mating surface to transaxle case.	38. Cooler check valve	74. Rear sun gear thrust bearing race
3. Oil strainer assembly : Replace oil strainer when overhauling.	39. Spring	75. Rear sun gear thrust bearing
4. Parking lock pawl shaft	40. Transaxle case plug	76. Forward clutch hub
5. Parking lock pawl	41. Fluid filler tube	77. Intermediate shaft thrust bearing race
6. Parking lock pawl return spring	42. Fluid level gauge	78. Intermediate shaft thrust bearing
7. Parking lock pawl rod	43. Fluid cooler inlet pipe	79. 2nd brake piston snap ring
8. Parking lock pawl bracket	44. Fluid cooler outlet pipe	80. O/D and 2nd coast brake retaining plate snap ring
9. Manual detent spring	45. 2nd brake gasket	81. O/D and 2nd coast brake retaining plate
10. Manual valve lever	46. Brake drum gasket	82. O/D and 2nd coast brake disc
11. Manual valve lever pin	47. Pipe union	83. O/D and 2nd coast brake separator plate
12. Manual shift shaft	48. Reduction drive gear nut : After tightening nut so as rotational torque of reduction drive gear to be in specified value, caulk nut securely.	84. O/D and 2nd coast brake rear plate
CH 13. Manual shift shaft oil seal : Apply grease 99000-25030 to oil seal lip.	49. Reduction drive gear	85. Rear cover seal ring
CH 14. Differential side oil seal : Apply grease 99000-25030 to oil seal lip.	50. Planetary ring gear subassembly	86. Reverse clutch drum thrust bearing
15. Torque converter housing plug	51. Breather hose	87. Rear cover plug
16. Lubrication LH tube	52. Breather union	1216B 88. Transaxle rear cover : Apply sealant 99000-31230 to mating surface.
17. Lubrication RH tube	53. Input shaft speed sensor	89. Harness bracket
18. Fluid reservoir RH plate	54. Valve body harness	90. Select cable clamp
19. Input shaft front thrust bearing	55. 1st and reverse brake piston	91. Governor apply No.1 gasket
20. Input shaft rear thrust bearing	56. O-ring	92. Output shaft speed sensor (VSS)
21. Input shaft rear thrust bearing race	57. 1st and reverse brake return spring subassembly	93. One-way clutch outer race retainer
22. Direct clutch hub	58. 1st and reverse brake disc	94. Select cable bracket
23. Lubrication tube clamp	59. 1st and reverse brake separator plate	⊗ : Do not reuse.
24. Fluid reservoir LH plate	60. 1st and reverse brake retaining plate	FLD : Apply automatic transaxle fluid.
25. Governor apply No.2 gasket	61. 1st and reverse brake snap ring	(a) : 5.5 N·m (0.55 kgf-m, 4.0 lb-ft)
26. Automatic transaxle case	62. Planetary gear assembly	(b) : 7.0 N·m (0.7 kgf-m, 5.0 lb-ft)
27. Accumulator piston O-ring	CH 63. Planetary carrier thrust washer : Apply grease 99000-25030 to slide contact face.	(c) : 7.5 N·m (0.75 kgf-m, 5.5 lb-ft)
28. Accumulator spring	64. One-way clutch No.2 assembly	(d) : 10 N·m (1.0 kgf-m, 7.5 lb-ft)
29. C2 accumulator piston	65. 2nd brake retaining plate	(e) : 13 N·m (1.3 kgf-m, 9.5 lb-ft)
30. C1 accumulator piston	66. 2nd brake disc	(f) : 17 N·m (1.7 kgf-m, 12.5 lb-ft)
31. B1 accumulator piston	67. 2nd brake separator plate	(g) : 35 N·m (3.5 kgf-m, 25.5 lb-ft)
32. Oil pan gasket	68. 2nd brake return spring subassembly	(h) : 23 N·m (2.3 kgf-m, 17.0 lb-ft)
33. Oil pan	69. Front sun gear thrust bearing race	(i) : 25 N·m (2.5 kgf-m, 18.0 lb-ft)
34. A/T fluid drain plug	70. Front planetary sun gear	(j) : 33 N·m (3.3 kgf-m, 24.0 lb-ft)
35. Manual select lever	71. Planetary gear thrust bearing	
36. Lock washer	72. One-way clutch No.1 assembly	

Automatic Transaxle Unit Disassembly

S7RW0A5106033

⚠ CAUTION

- **Thoroughly clean transaxle exterior before overhauling it.**
- **Keep working table, tools and hands clean while overhauling.**
- **Use special care to handle aluminum parts so as not to damage them.**
- **Do not expose removed parts to dust. Keep them always clean.**

1) Remove torque converter (1).

⚠ CAUTION

Remove torque converter as much straight as possible. Leaning it may cause to damage oil seal lip.

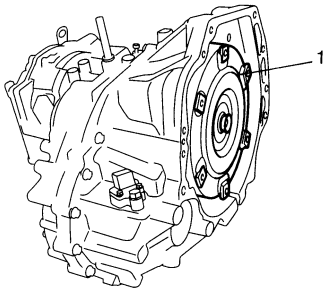

I2RH0B510078-01

2) Remove engine mounting LH bracket (1).

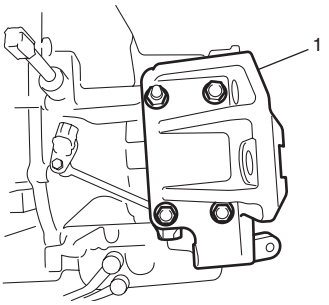

I5RW0C510058-01

3) Remove manual select lever (1).

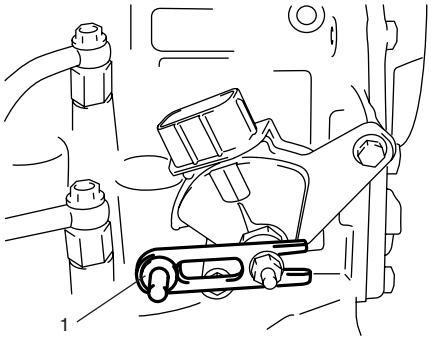

I2RH0B510080-01

4) Uncaulk lock washer (1), then remove lock nut (2) and lock washer.

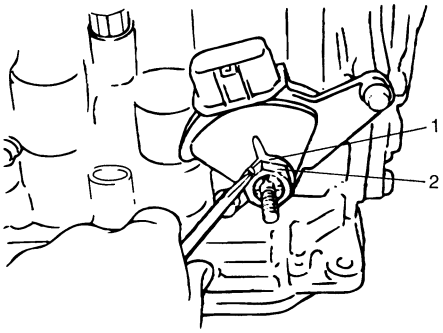

I2RH0B510081-01

5) Remove transmission range sensor (1).

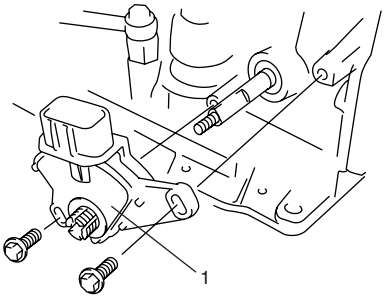

I2RH0B510082-01

6) Remove output shaft speed sensor (VSS) (2) and input shaft speed sensor (1).

7) Remove harness bracket and select cable clamp (3).

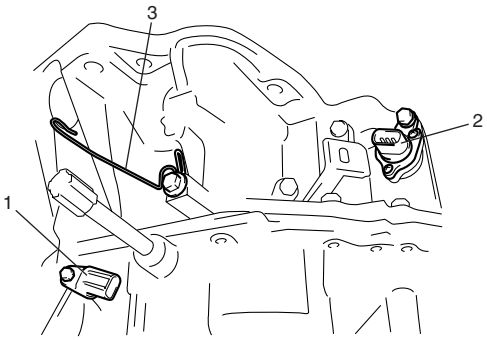

I2RH0B510083-01

8) Remove select cable bracket (1).

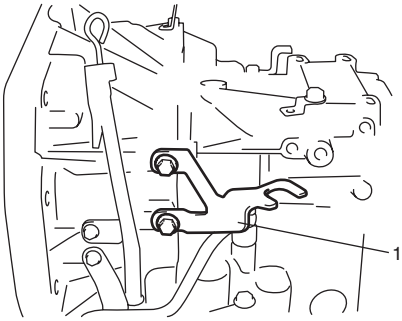

I5RW0C510059-01

9) Remove fluid cooler pipes (1) and pipe unions (2).
10) Remove fluid level gauge (3) and fluid filler tube (4).

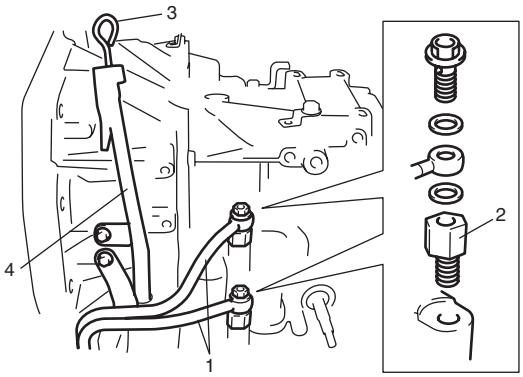

I5RW0C510060-01

11) Remove oil pan (1) and oil pan gasket (2).

NOTE

- **For removal of oil pan, do not turn transaxle over as this will contaminate valve body with foreign materials in bottom of oil pan.**
- **When removing oil pan, tap around it lightly with plastic hammer. Do not force it off by using screwdriver or the like.**

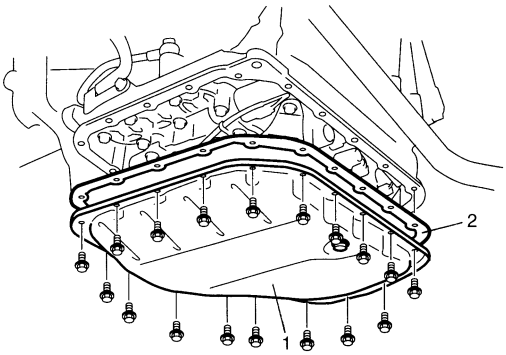

I2RH0B510086-01

12) Remove oil strainer assembly (1).

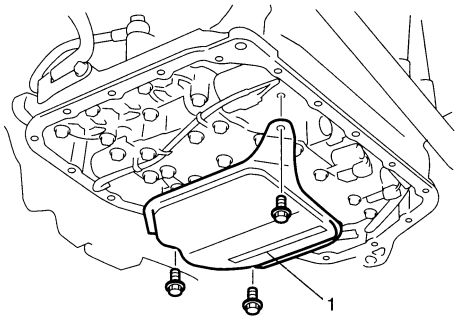

I2RH0B510087-01

13) Disconnect connectors (2) from solenoid valves and transmission fluid temperature sensor (1).

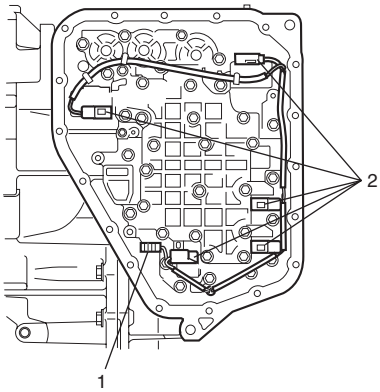

I5RW0C510038-02

14) Remove valve body assembly bolts.

⚠ CAUTION

Be careful not to let manual valve fall off when removing valve body assembly.

NOTE

There are five kinds of bolts (bolts A (1), B (2), C (3), D (4) and E (5)) fixing valve body assembly.

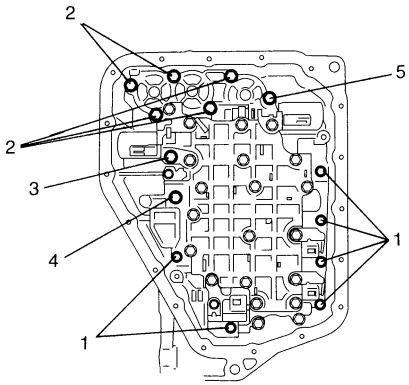

I2RH0B510089-01

15) Remove manual valve rod (1) from manual valve lever (2), then remove valve body assembly (3).

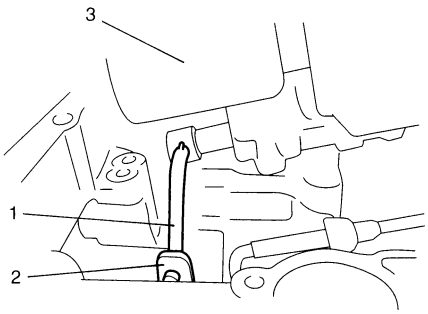

I2RH0B510090-01

16) Remove valve body harness (1).

⚠ CAUTION

When pulling valve body harness out of transaxle case, take care not to damage transmission fluid temperature sensor (2) at narrow exit of case.
Careless sensor treatment might cause sensor malfunction.

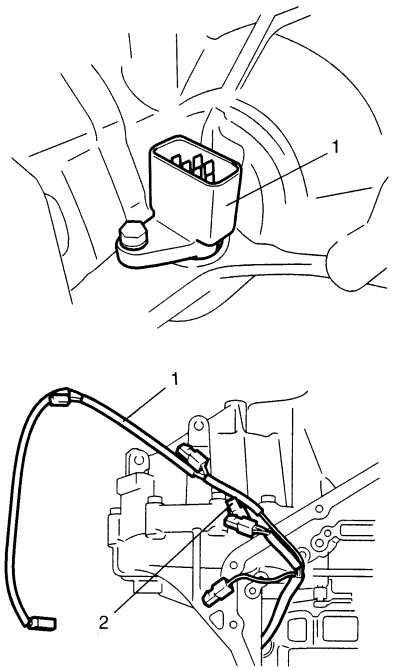

I2RH0B510091-01

17) Remove governor apply No.1 gasket (1).

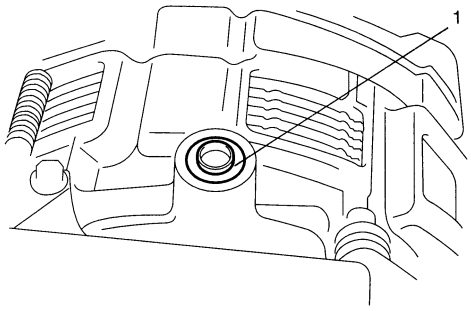

I2RH0B510092-01

18) Remove cooler check valve (1) and spring (2).

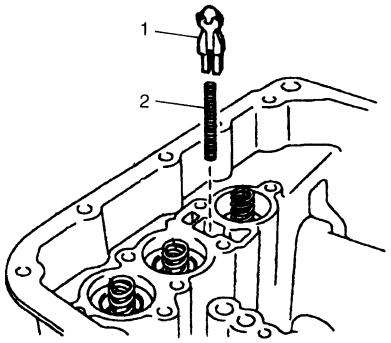

I2RH0B510093-01

19) Remove accumulator pistons and springs.
To remove C2 (1), C1 (2) and B1 (3) accumulator pistons and springs, position rag on pistons to catch each piston. To remove pistons, force low-pressure compressed air (1 kg/cm^2, 15 psi, 100 kPa, max) into hole (4) as shown in figure, and pop each piston into rag.

NOTE

Do not push accumulator pistons with fingers or anything before removing them. Pushing them may cause compressed fluid in accumulator to spew out of hole and get to your face and clothes.

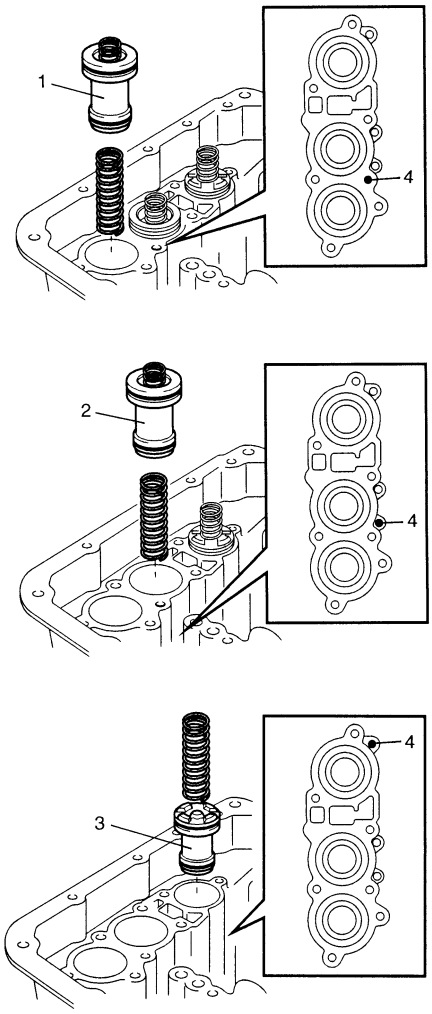

I2RH0B510094-01

20) Remove transaxle case plug (1).

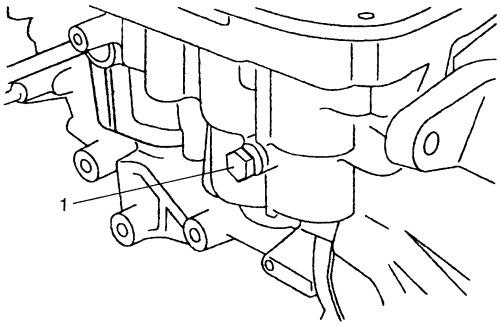

I2RH0B510095-01

21) Remove torque converter housing bolts.
22) Remove torque converter housing (1) while tapping around it lightly with plastic hammer.

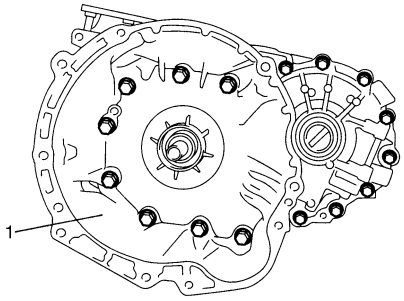

I3RM0B510060-01

23) Remove breather hose (1).
24) Remove breather union (2).

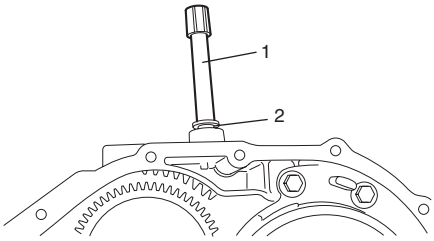

I2RH0B510097-01

25) Measure input shaft thrust play.
Apply dial gauge onto input shaft end (1) and measure thrust play of input shaft.
When input shaft thrust play is out of specification, select input shaft front thrust bearing with proper thickness from among the list below and replace it.

Special tool
(A): 09900–20607
(B): 09900–20701

<u>Input shaft thrust play</u>
0.3 – 0.9 mm (0.012 – 0.035 in.)

<u>Available input shaft front thrust bearing thickness</u>
“a”: 0.8, 1.4 mm (0.032, 0.055 in.)

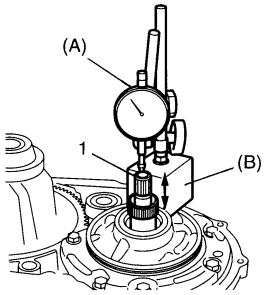

I2RH0B510098-01

26) Remove oil pump assembly (1).

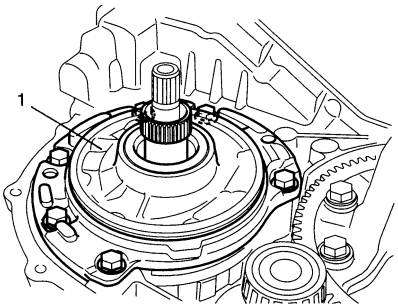

I2RH0B510099-01

27) Remove direct clutch assembly (1).

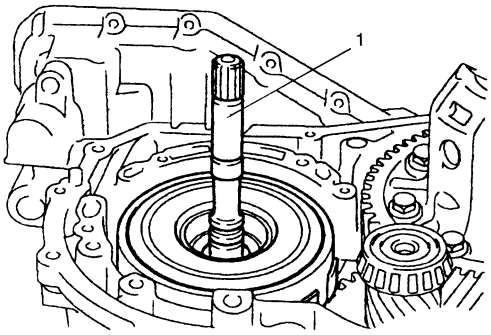

I2RH0B510100-01

28) Remove input shaft front thrust bearing (1).

NOTE

If input shaft front thrust bearing is not found, it may have been taken out with oil pump assembly.

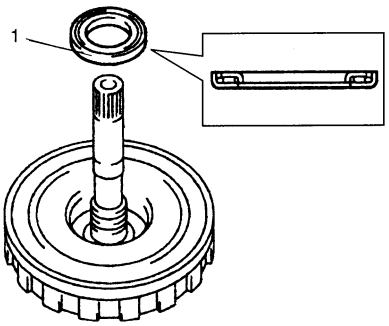

I2RH0B510101-01

29) Remove input shaft rear thrust bearing (1) and thrust bearing race (2).

NOTE

If input shaft rear thrust bearing is not found, it may have been taken out with direct clutch assembly.

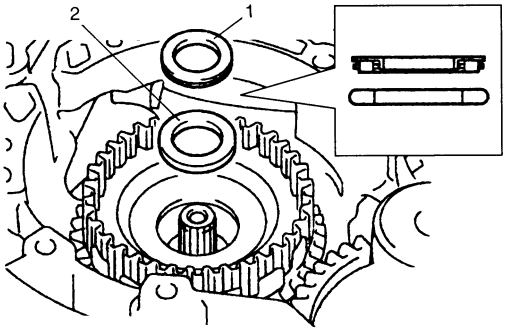

I2RH0B510102-01

30) Remove direct clutch hub (1).

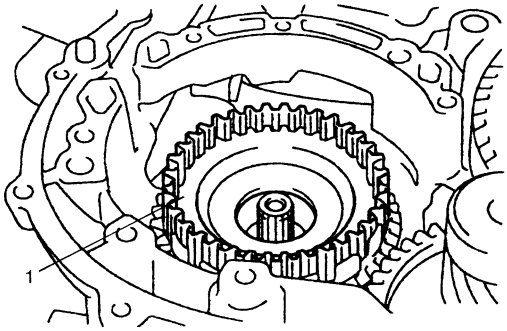

I2RH0B510103-01

31) Remove differential assembly (1) and countershaft assembly (2).

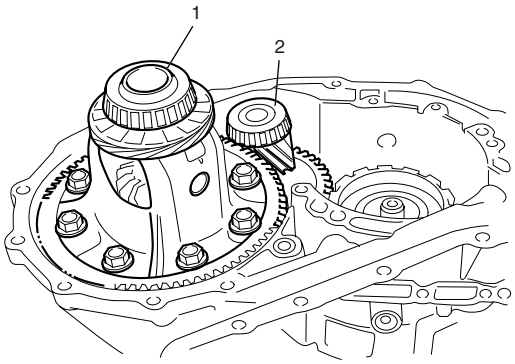

I4RS0A510036-01

32) Remove governor apply No.2 gasket (1).

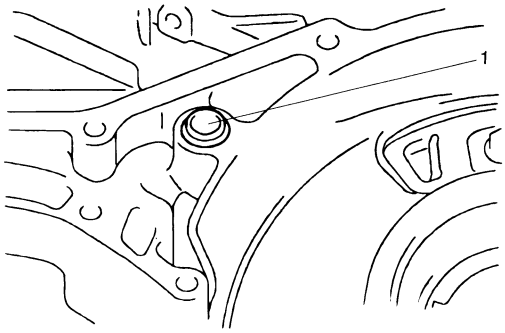

I2RH0B510105-01

33) Remove fluid reservoir LH plate (1).

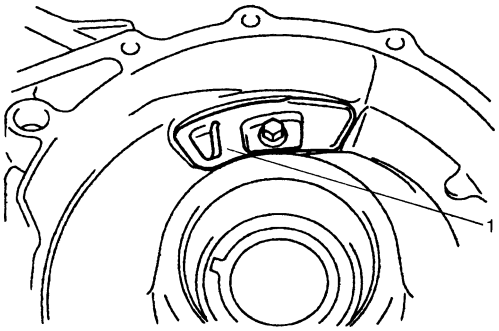

I2RH0B510106-01

34) Turn over transaxle and remove rear cover assembly (1).

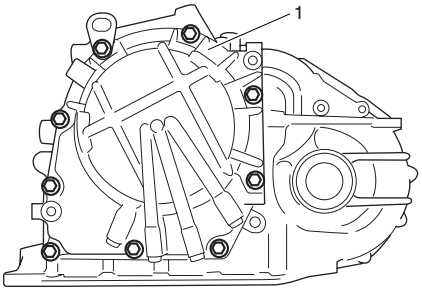

I4RS0A510037-01

35) Remove reverse clutch drum thrust bearing (1).

NOTE

If reverse clutch drum thrust bearing is not found, it may have been taken out with rear cover assembly.

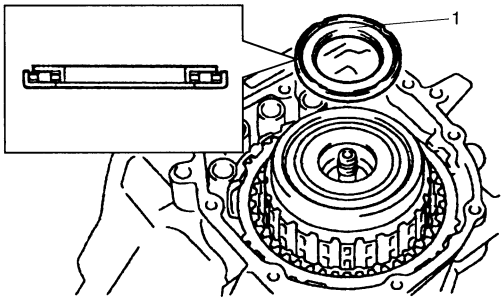

I2RH0B510108-01

36) Remove 2nd brake gasket (1).

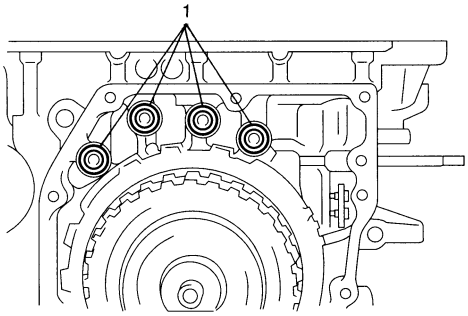

I2RH0B510109-01

37) Measure O/D and 2nd coast brake piston stroke. If piston stroke exceeds specification, inspect and replace plates and discs.
- Measure dimension “a” from mating surface of transaxle case to O/D and 2nd coast brake rear plate (1) using straightedge and micrometer caliper.
- Measure dimension “b” from O/D and 2nd coast brake piston (2) to rear cover assembly mating surface using straightedge and micrometer caliper.
- Calculate piston stroke from measured value of dimensions “a” and “b”.
- Piston stroke = “a” – “b”

O/D and 2nd coast brake piston stroke
Standard: 0.65 – 1.05 mm (0.026 – 0.041 in.)

⚠ CAUTION

When brake disc, retaining plate, separator plate and/or rear plate of O/D and 2nd coast brake have been replaced, all learned contents, which have been stored in TCM memory by executing learning control, should be initialized referring to “Learning Control Initialization”.
Neglecting this initialization may cause excessive shift shock.

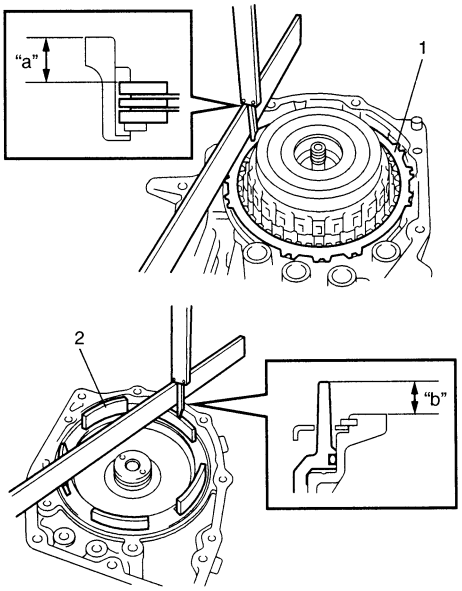

I2RH0B510110-01

38) Remove forward and reverse clutch assembly (1).

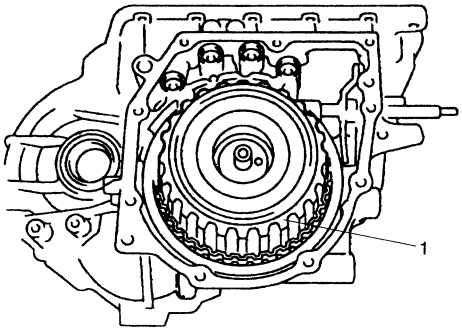

I2RH0B510111-01

39) Remove intermediate shaft thrust bearing front race (1), thrust bearing (2) and rear race (3) from forward and reverse clutch assembly (4).

NOTE

If intermediate shaft thrust bearing and/or races are not found on forward and reverse clutch assembly, they may have been left in transaxle.

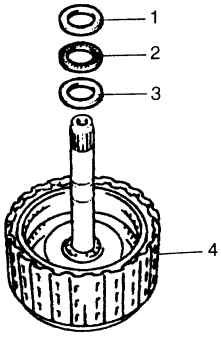

I2RH0B510112-01

40) Remove O/D and 2nd coast brake rear plate (1), discs (2), separator plate (3) and retaining plate (4).

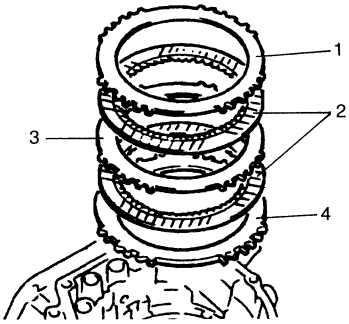

I2RH0B510113-01

41) Remove forward clutch hub (1).

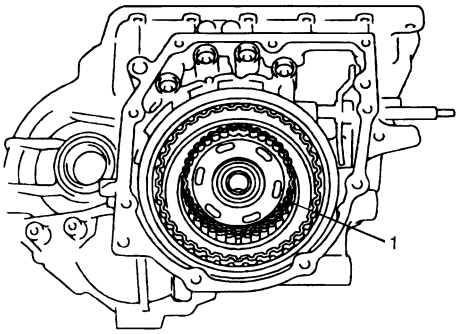

I2RH0B510114-01

42) Remove rear sun gear thrust bearing (1) from forward clutch hub (2).

NOTE

If rear sun gear thrust bearing is not found on forward clutch hub, it may have been left in transaxle.

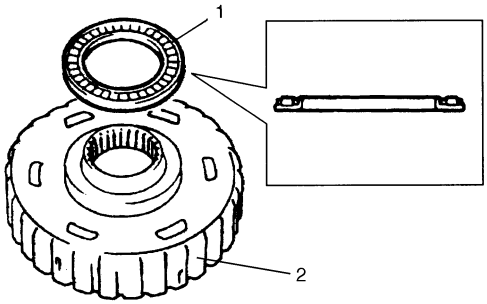

I2RH0B510115-01

43) Remove rear sun gear thrust bearing race (1).

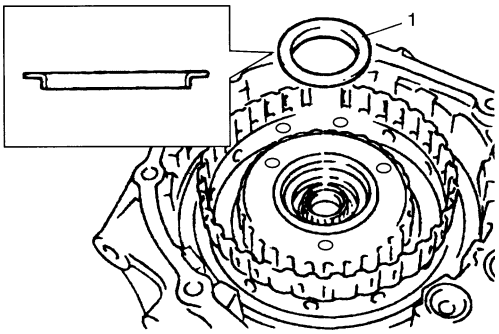

I2RH0B510116-01

44) Remove rear planetary sun gear subassembly (1) and one-way clutch No.1 assembly (2).

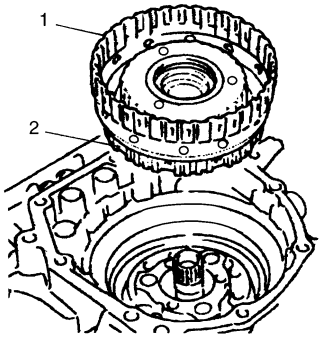

I2RH0B510117-01

45) Remove planetary gear thrust bearing (1).

NOTE

If planetary gear thrust bearing is not found on one-way clutch No.1 assembly, it may have been left in transaxle.

46) Remove one-way clutch No.1 assembly (2) from rear planetary sun gear subassembly (3).

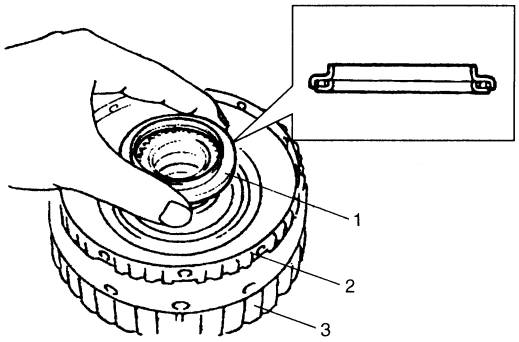

I2RH0B510118-01

47) Remove planetary carrier thrust washer (1).

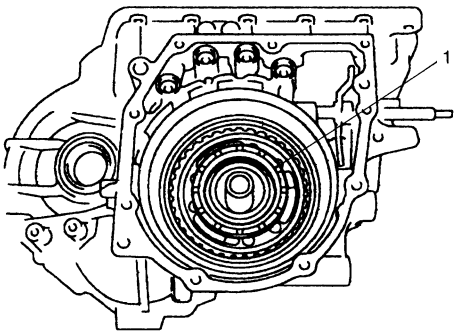

I2RH0B510119-01

48) Remove O/D and 2nd coast brake retaining plate snap ring (1).

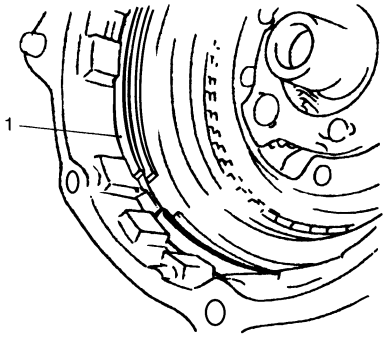

I2RH0B510120-01

49) Remove front planetary sun gear (1).

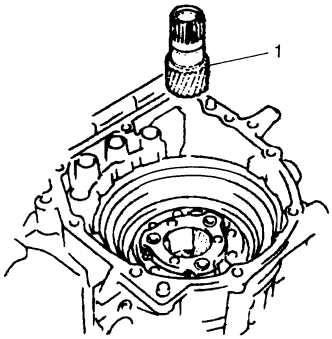

I2RH0B510121-01

50) Remove front sun gear thrust bearing race (2) from front planetary sun gear (1).

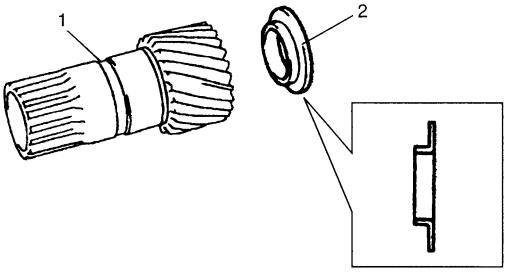

I2RH0B510122-01

51) Before disassembling 2nd brake piston assembly (4), check 2nd brake piston stroke by measuring clearance between 2nd brake separator plate (1) and piston (2) with feeler gauge (3).
If clearance, that is, piston stroke is out of specification, replace brake discs and plates with new ones.

⚠ CAUTION

When brake disc, retaining plate and/or separator plate of 2nd brake have been replaced, all learned contents, which have been stored in TCM memory by executing learning control, should be initialized referring to "Learning Control Initialization". Neglecting this initialization may cause excessive shift shock.

<u>2nd brake piston stroke</u>
"a": 0.40 – 1.25 mm (0.016 – 0.049 in.)

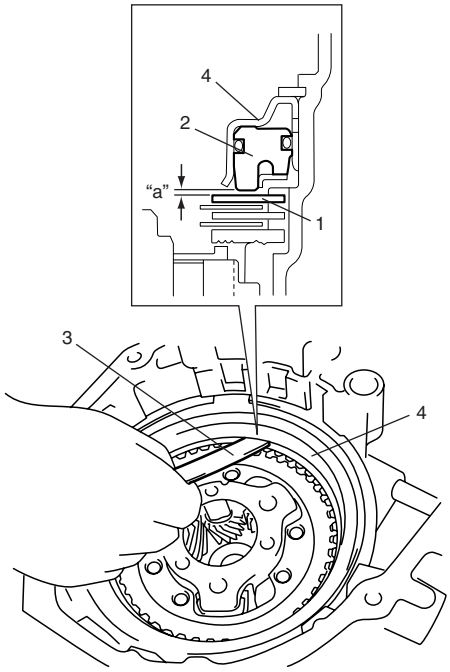

I2RH0B510123-01

52) Using special tool and hydraulic press, remove 2nd brake piston snap ring (1).

⚠ CAUTION

Do not press 2nd brake piston assembly in over 0.4 mm (0.016 in.).
Excessive compression may cause damage to piston assembly, return spring, plates and/or discs.

Special tool
(A): 09926–96050

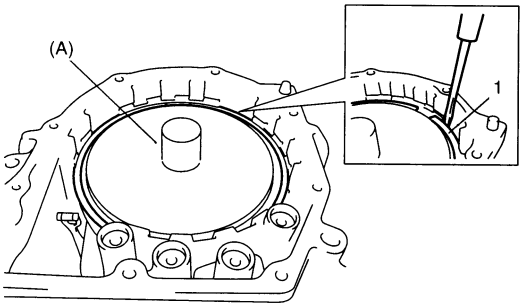

I2RH0B510124-01

53) Remove 2nd brake piston assembly (1).

54) Remove 2nd brake return spring subassembly (2).

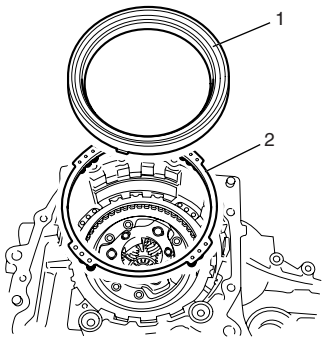

I4RS0A510038-01

55) Remove 2nd brake separator plates (1), discs (2) and retaining plate (3).

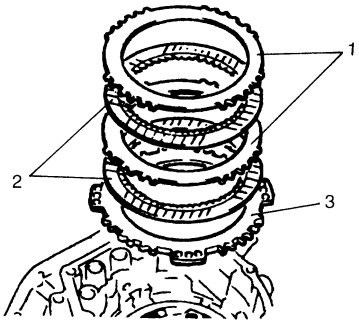

I2RH0B510127-01

56) Remove brake drum gasket (1).

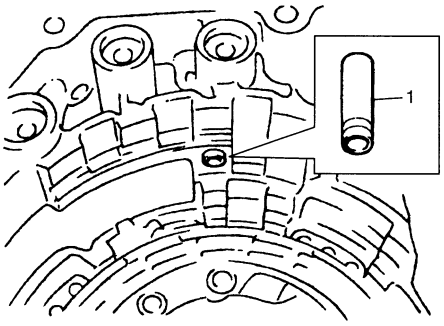

I2RH0B510128-01

57) Remove one-way clutch outer race retainer (1).

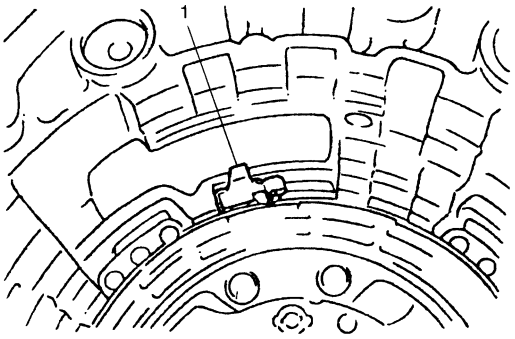

I2RH0B510129-01

58) Check one-way clutch No.2 as follows.

- Ensure planetary carrier (1) rotates only in counterclockwise direction “A”, never in clockwise direction “B”.
- If the planetary carrier rotates both ways or does not rotate either way, one-way clutch No.2 assembly will need to be replaced with new one-way clutch No.2 assembly.

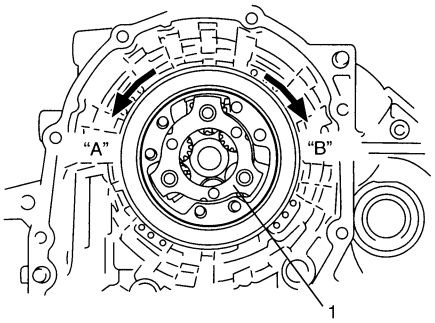

I2RH0B510130-01

59) Remove one-way clutch No.2 assembly (1).

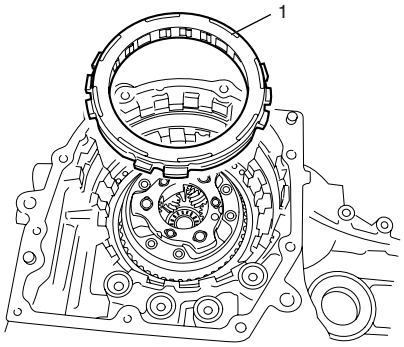

I4RS0A510039-01

60) Remove planetary gear assembly (1).

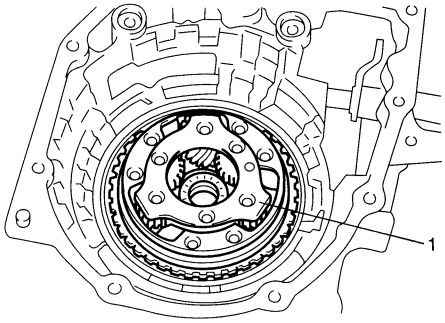

I2RH0B510132-01

61) Measure 1st and reverse brake piston stroke.
If piston stroke exceeds specified value, disassemble, inspect and replace discs and plates.
- Using special tool, measure 1st and reserve brake piston stroke when compressed air (400 – 800 kPa, 4 – 8 kg/cm^2, 57 – 113 psi) is blown through oil hole.

Special tool
(A): 09900–20607
(B): 09900–20701
(C): 09952–06020

1st and reverse brake piston stroke
Standard: 0.79 – 1.49 mm (0.031 – 0.059 in.)

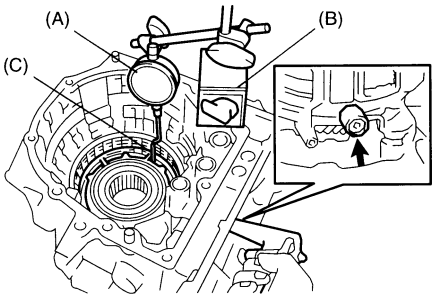

I2RH0B510133-01

62) Remove snap ring while the 1st and reverse brake piston return springs are compressed using special tool and hydraulic press.

⚠ CAUTION

Do not press 1st and reverse brake return spring subassembly in over 0.8 mm (0.031 in.).
Excessive compression may cause damage to return spring subassembly, discs, plates and/or piston.

Special tool
(A): 09926–97620

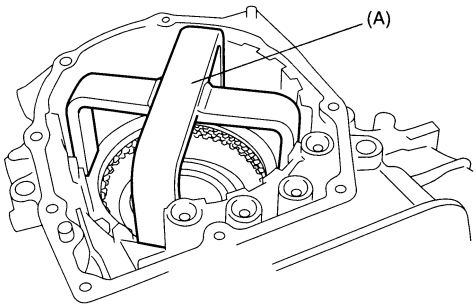

I2RH0B510134-01

63) Remove 1st and reverse brake retaining plate, discs and separator plates.

64) Remove 1st and reverse brake return spring subassembly (1).

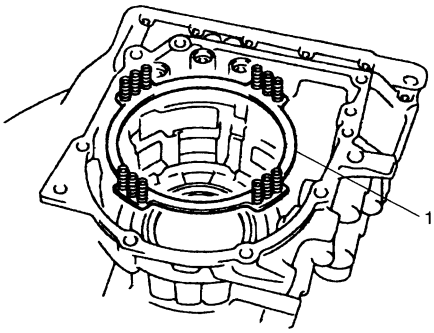

I2RH0B510135-01

65) Turn over transaxle and uncaulk reduction drive gear nut (1).

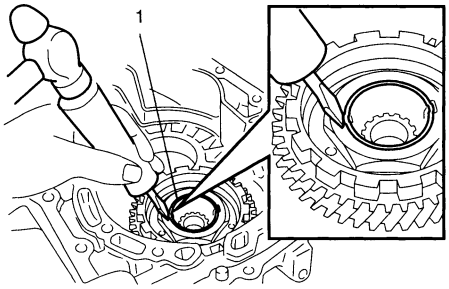

I2RH0B510136-01

66) Secure reduction drive gear (1) with parking lock pawl, then remove reduction drive gear nut.

⚠ CAUTION

- **It is recommended that this operation should be carried out on rubber mat to prevent damaging transaxle case.**
- **Never reuse removed nut.**

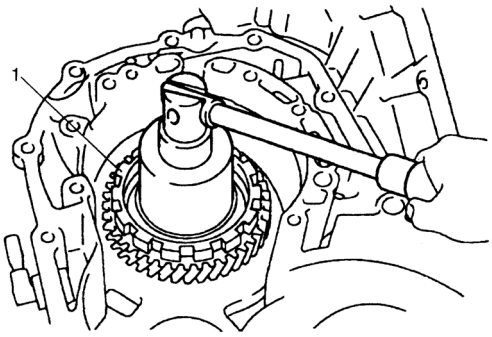

I2RH0B510137-02

67) Using special tools and hydraulic press, remove planetary ring gear subassembly (1).

⚠ CAUTION

Do not reuse planetary ring gear subassembly. Otherwise it may cause damage to planetary gear unit and/or reduction gears.

Special tool
(A): 09913–84510
(B): 09923–78210

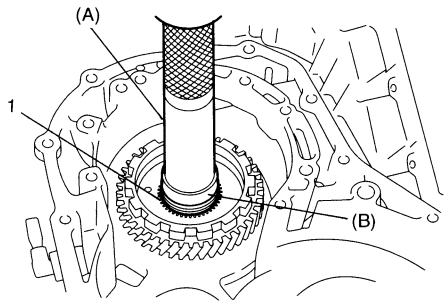

I2RH0B510138-01

68) Remove parking lock pawl shaft, then spring (2) and parking lock pawl (1).

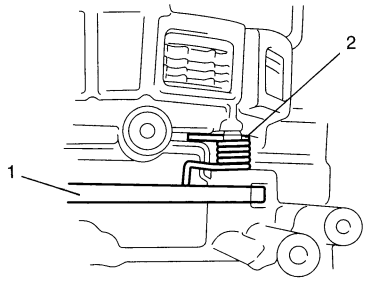

I2RH0B510139-01

69) Screwing 3 bolts (1), remove reduction drive gear (2).

⚠ CAUTION

Screw 3 bolts into reduction drive gear uniformly, or reduction drive gear, bearing and transaxle case may be damaged.

Bolt length
30 mm (1.20 in.)

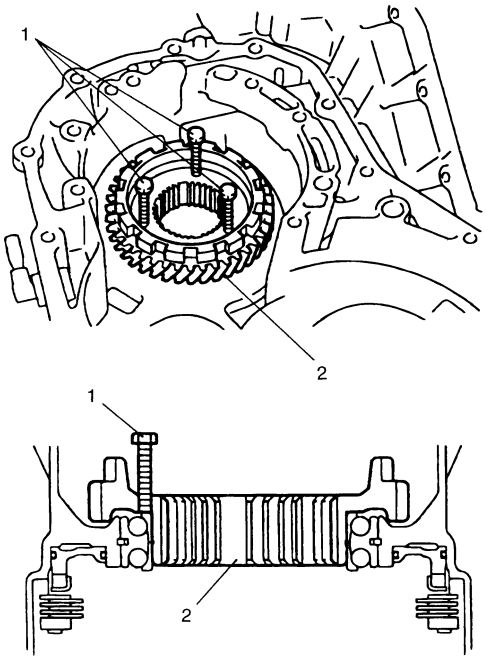

I2RH0B510140-01

70) Blowing compressed air from oil hole (1) of oil pump, remove 1st and reverse brake piston (2).

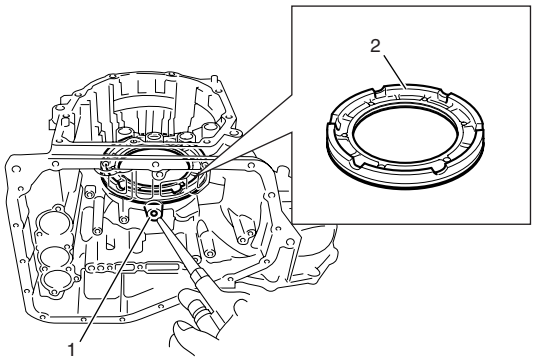

I4RS0A510040-01

71) Remove parking lock pawl bracket (1).

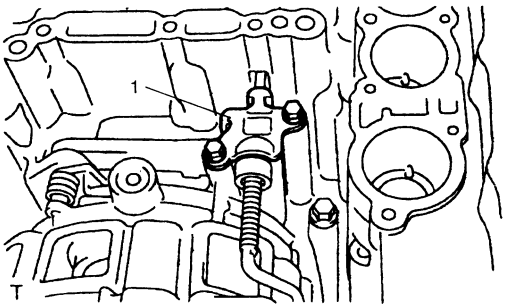

I2RH0B510142-01

72) With slotted screwdriver, cut and unfold manual valve lever spacer (1) and proceed to remove manual valve lever spacer.

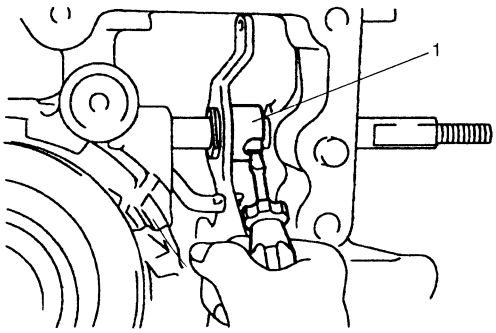

I2RH0B510143-01

73) Using spring pin remover with 3 mm (0.12 in.) in diameter and hammer, drive out manual valve lever pin (1).

74) Remove manual shift shaft (2).

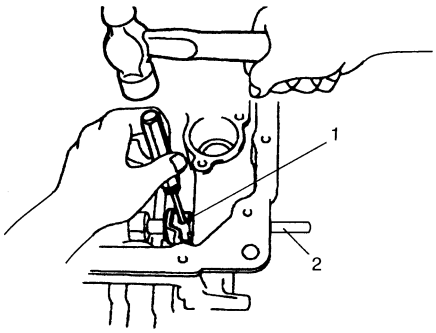

I2RH0B510144-01

75) Remove parking lock pawl rod (2) from manual valve lever (1).

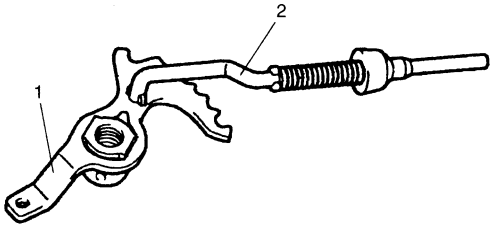

I2RH0B510145-01

76) Remove manual detent spring (1).

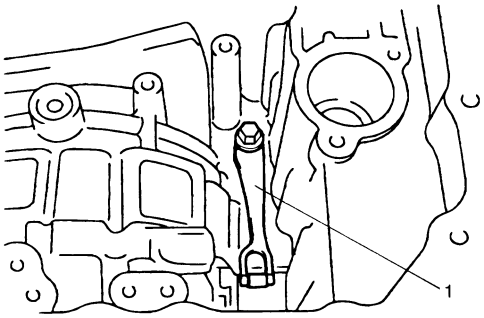

I2RH0B510146-01

77) Remove manual shift shaft oil seal (1).

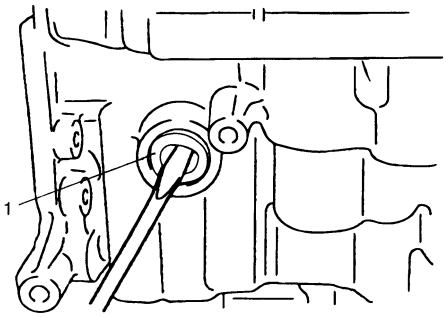

I2RH0B510147-01

Oil Pump Assembly Components

S7RW0A5106034

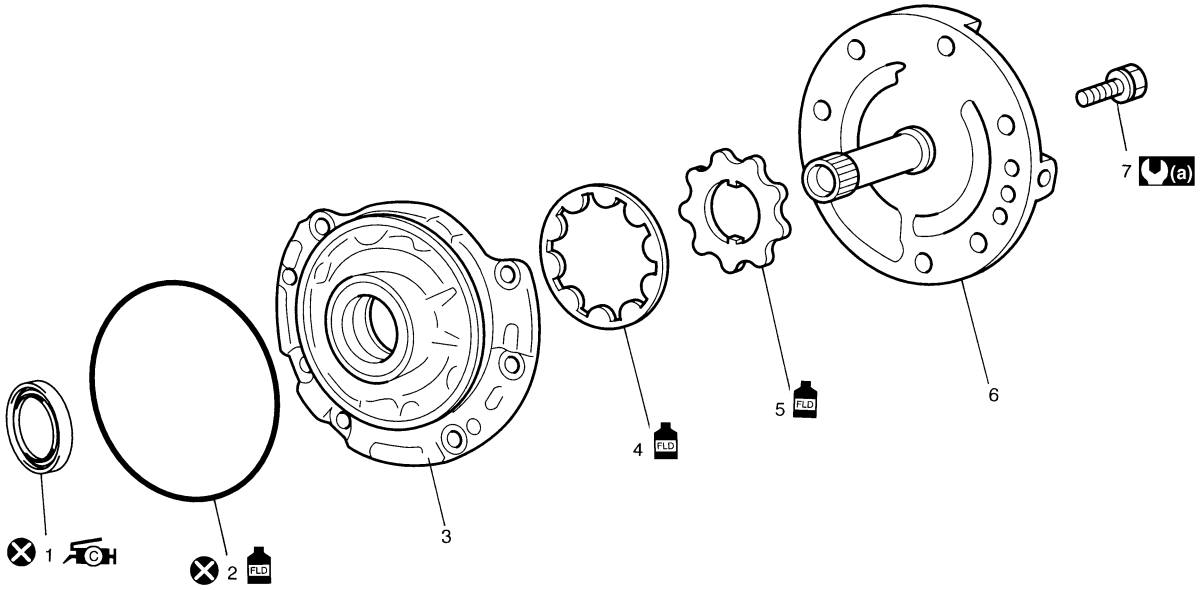

I5RW0C510061-01

1. Oil seal : Apply grease 99000-25030 to oil seal lip.	5. Oil pump drive gear	: Apply automatic transaxle fluid.
2. O-ring	6. Stator shaft assembly	: 10 N·m (1.0 kgf-m, 7.5 lb-ft)
3. Oil pump body	7. Oil pump subassembly bolts	: Do not reuse.
4. Oil pump driven gear		

Oil Pump Assembly Disassembly and Reassembly

S7RW0A5106035

Disassembly

1) Remove O-ring from pump body.
2) Remove 8 oil pump subassembly bolts (1) and stator shaft assembly (2).

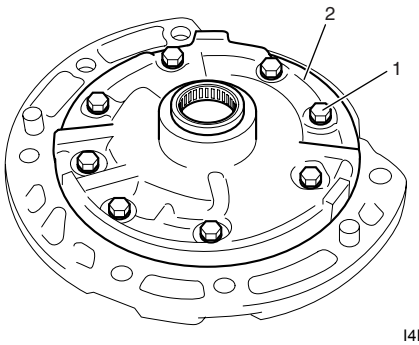

I4RS0A510041-01

3) Remove oil seal (1) using special tool.

Special tool
(A): 09913–50121

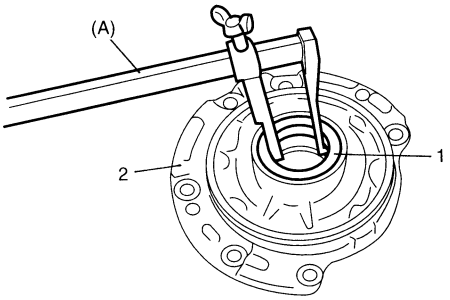

I2RH0B510150-01

2. Oil pump body

Reassembly

1) Install new oil pump body oil seal (1).
   Use special tool and hammer to install it, and then apply grease to its lip portion.

   Special tool
   (A): 09913–85210

   "A": Grease 99000–25030 (SUZUKI Super Grease C)

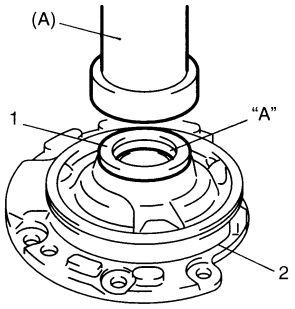

I2RH0B510151-01

2. Oil pump body

2) Install driven gear and drive gear to oil pump body after applying A/T fluid.
3) Install stator shaft assembly to oil pump body and tighten 8 pump subassembly bolts (1) to specification.

   Tightening torque
   Oil pump subassembly bolt (a): 10 N·m (1.0 kgf-m, 7.5 lb-ft)

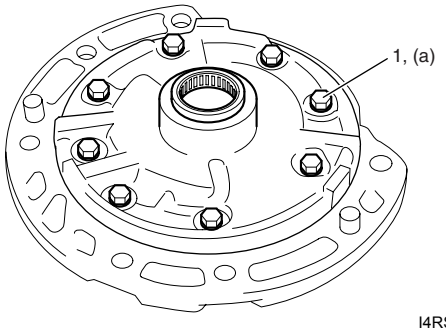

I4RS0A510042-01

4) After applying A/T fluid to new O-ring, install it to oil pump body.
5) Check drive gear for smooth rotation by using torque converter (1).

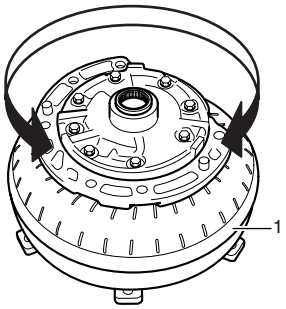

I4RS0A510043-01

Oil Pump Assembly Inspection

S7RW0A5106036

1) Check body clearance of driven gear (1).
   Push driven gear to one side of oil pump body (2). Using a feeler gauge, measure clearance between driven gear and body. If clearance exceeds its standard value, replace oil pump assembly.

   <u>Clearance between oil pump driven gear and oil pump body</u>
   Standard: 0.10 – 0.17 mm (0.0039 – 0.0067 in.)

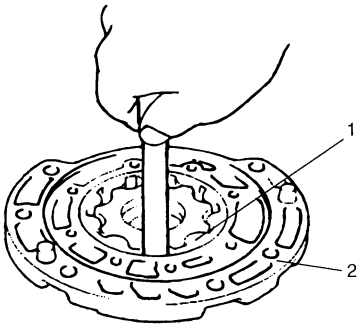

I2RH0B510154-01

2) Check tip clearance of both drive and driven gears. Using a feeler gauge, measure clearance between drive and driven gear tips. If clearance exceeds its standard value, replace oil pump assembly.

   <u>Tip clearance between oil pump drive gear and oil pump driven gear</u>
   Standard: 0.07 – 0.15 mm (0.0028 – 0.0059 in.)

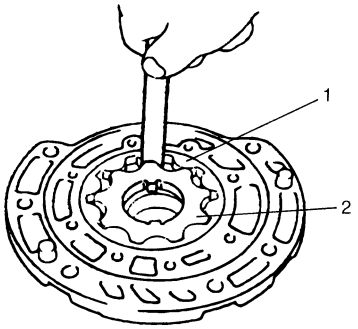

I2RH0B510155-01

3) Check side clearance of both gears.
Using a straightedge (1) and a feeler gauge (2), measure side clearance between gears and pump body.
If clearance exceeds its standard value, replace oil pump assembly.

Side clearance between gears and oil pump body
Standard: 0.02 – 0.05 mm (0.0008 – 0.0019 in.)

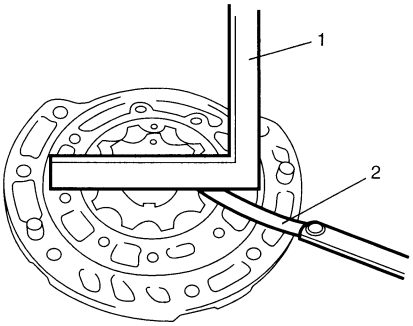

I2RH0B510156-01

4) Using special tool, measure stator shaft bush (1) bore.
If measured stator shaft bush bore is out of specifications, replace oil pump assembly with new one.

Special tool
(A): 09900–20605

Stator shaft bush bore
Standard: 18.424 – 18.450 mm (0.7254 – 0.7264 in.)

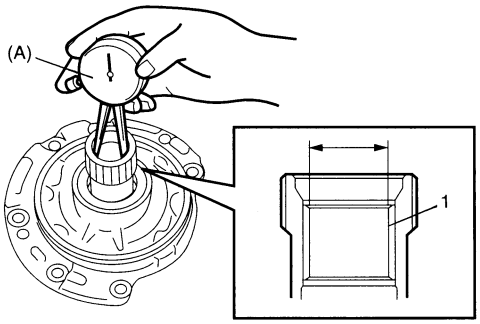

I2RH0B510157-01

5) Install direct clutch assembly (1) to stator shaft assembly (2), then ensure that direct clutch assembly turns smoothly.
If unsmooth rotation or noise are found in oil pump assembly, replace oil pump assembly with new one. This check should also be done to input shaft assembly and replace input shaft assembly if necessary.

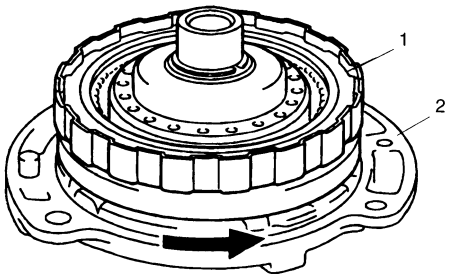

I2RH0B510158-01

6) Using special tool, measure oil pump body bush bore.
If measured oil pump body bush (1) bore is out of specifications, replace oil pump assembly with new one. Torque converter also needs to be checked. Replace torque converter, if necessary.

Special tool
(A): 09900–20605

Oil pump body bush bore
Standard: 38.113 – 38.138 mm (1.5005 – 1.5015 in.)

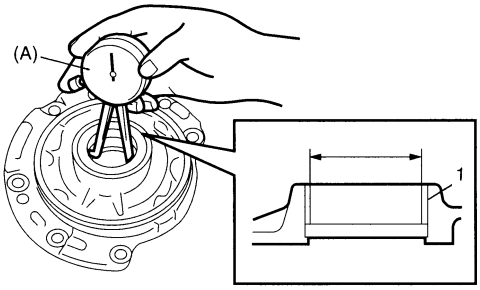

I2RH0B510159-01

Direct Clutch Assembly Components

S7RW0A5106037

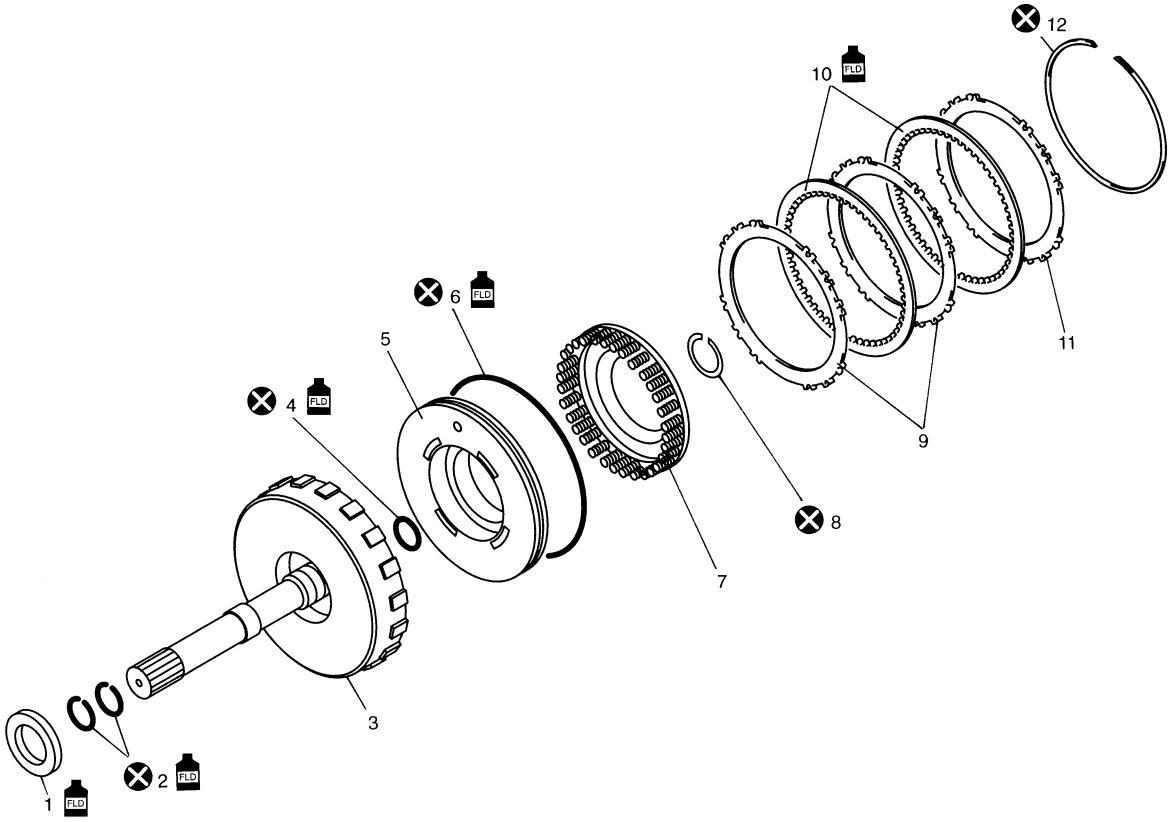

I2RH0B510160-01

1. Input shaft front thrust bearing	6. Outer O-ring	11. Direct clutch retaining plate
2. Input shaft seal ring	7. Direct clutch return spring subassembly	12. Plate snap ring
3. Input shaft subassembly	8. Shaft snap ring	FLD : Apply automatic transaxle fluid.
4. Inner O-ring	9. Direct clutch separator plate	⊗ : Do not reuse.
5. Direct clutch piston	10. Direct clutch disc	

Direct Clutch Assembly Preliminary Check

S7RW0A5106038

Install direct clutch assembly (1) to oil pump assembly (2) blow in air (400 – 800 kPa, 4 – 8 kg/cm^2, 57 – 113 psi) through oil hole (3) of oil pump assembly with special tool attached on upper surface of direct clutch piston, and measure piston stroke of direct clutch.
If piston stroke exceeds specified value, disassemble, inspect and replace inner parts.

Special tool
(A): 09900–20607
(B): 09900–20701

<u>Direct clutch piston stroke</u>
0.4 – 0.7 mm (0.016 – 0.027 in.)

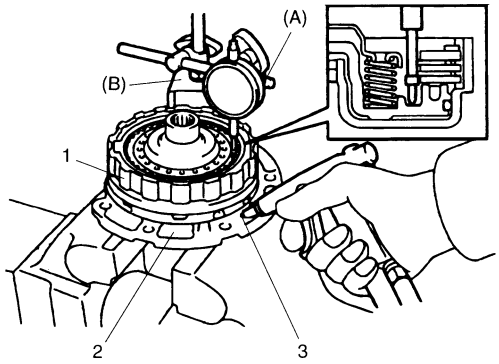

I2RH0B510161-01

Direct Clutch Assembly Disassembly and Reassembly

S7RW0A5106039

⚠ CAUTION

When clutch disc, retaining plate and/or separator plate of direct clutch have been replaced, all learned contents, which have been stored in TCM memory by executing learning control, should be initialized referring to "Learning Control Initialization". Neglecting this initialization may cause excessive shift shock.

Disassembly

1) Remove plate snap ring (1) then remove direct clutch retaining plate, discs and separator plates.

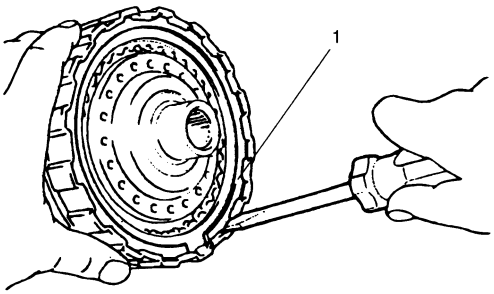

I2RH0B510162-01

2) Using special tool and hydraulic press, remove shaft snap ring (1).

Special tool
(A): 09926–98310

⚠ CAUTION

Do not press direct clutch return spring subassembly in over 0.7 mm (0.027 in.). Excessive compression may cause damage to direct clutch return spring subassembly and/or piston.

3) Remove direct clutch return spring assembly (2).

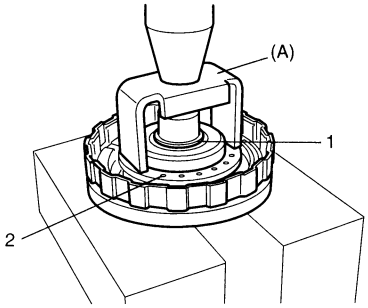

I2RH0B510163-01

4) Using a finger to block oil hole (1), apply compressed air (400 – 800 kPa, 4 – 8 kg/cm^2, 57 – 113 psi) to opposite hole, which will assist in removal of the clutch piston.

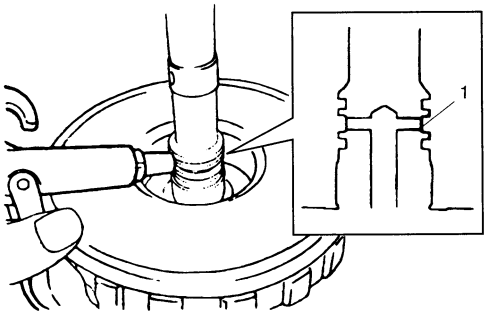

I2RH0B510164-01

5) Remove outer O-ring (1).

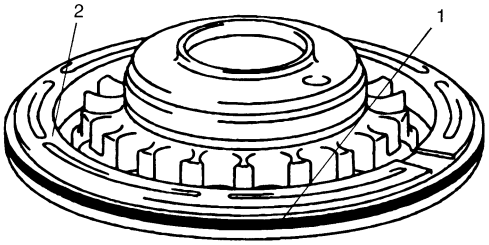

I2RH0B510165-01

2. Direct clutch piston

6) Remove inner O-ring (2).

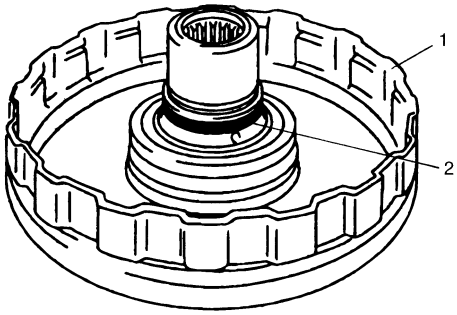

I2RH0B510166-01

1. Input shaft subassembly

7) Remove input shaft seal rings (1).

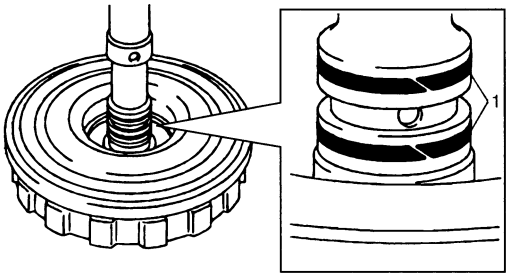

I2RH0B510167-01

Reassembly

Reverse disassembly procedure for assembly, noting the following points.

- Use new seal ring and O-ring. Apply A/T fluid before installation.
- Do not damage direct clutch return spring subassembly (1) and piston by pressing in direct clutch return spring subassembly passing through its original installing position over 0.7 mm (0.027 in.).

  Special tool
  (A): 09926–98310

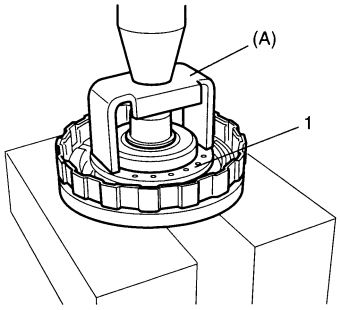

I2RH0B510168-01

- Apply A/T fluid to direct clutch separator plates (4), discs (3) and retaining plate (2).
- Install direct clutch separator plates (4), discs (3), retaining plate (2) and snap ring (1) to input shaft subassembly.

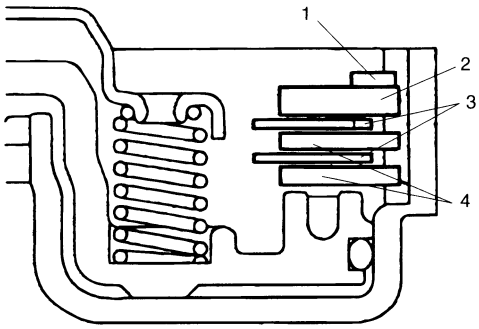

I2RH0B510169-01

- Install plate snap ring so that its both ends would be positioned in correct locations as shown in figure.

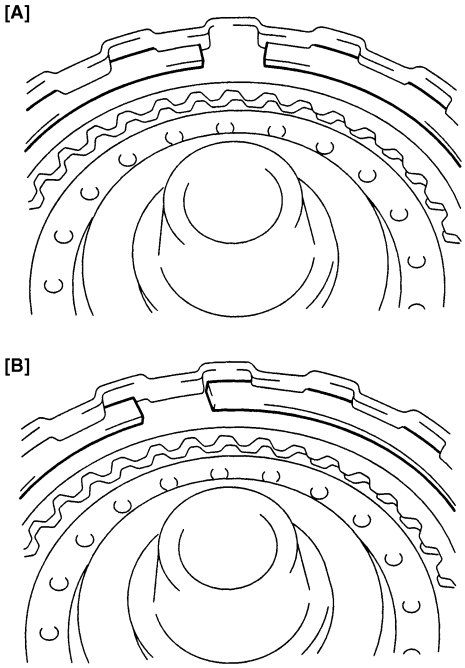

I2RH0B510170-01

[A]: Correct	[B]: Incorrect

- After assembly, measure direct clutch piston stroke.

  Special tool
  (A): 09900–20607
  (B): 09900–20701

  Direct clutch piston stroke
  0.4 – 0.7 mm (0.016 – 0.027 in.)

  When piston stroke is out of specification, select direct clutch retaining plate with suitable thickness from among the following table and replace it.

  Available direct clutch retaining plate thickness

Thickness	Identification mark
3.0 mm (0.118 in.)	1
3.2 mm (0.126 in.)	2
3.4 mm (0.134 in.)	3
2.8 mm (0.110 in.)	4

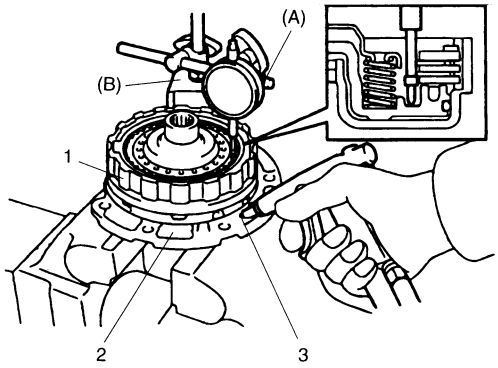

I2RH0B510171-01

1. Direct clutch assembly	3. Oil hole
2. Oil pump assembly	

Direct Clutch Assembly Inspection

S7RW0A5106040

Clutch Discs, Plates and Retaining Plate

Check that sliding surfaces of discs, separator plates and retaining plate are not worn hard or burnt. If necessary, replace.

NOTE

- **If disc lining is exfoliated, discolored, replace all discs.**
- **Before assembling new discs, soak them in A/T fluid for at least two hours.**

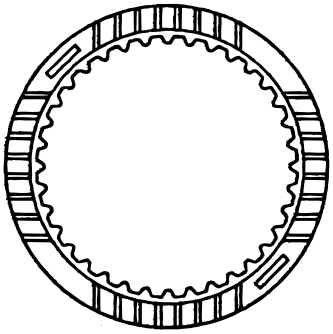

I2RH0B510172-01

Direct Clutch Return Spring Subassembly

Measure free length of direct clutch return spring subassembly.

Direct clutch return spring subassembly free length "a": 36.04 mm (1.419 in.)

NOTE

Do not apply excessive force when measuring spring free length. Perform measurement at several points.

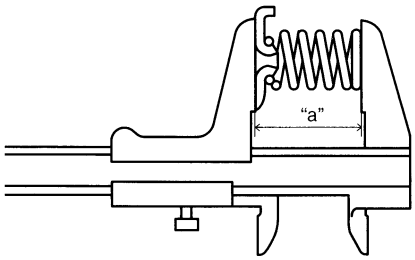

I2RH0B510173-01

Direct Clutch Piston

Shake direct clutch piston lightly and check that check ball (1) is not stuck.
Blow in low pressure air (Max. 100 kPa, 1 kg/cm^2, 15 psi) to check ball to check that there is no leakage.

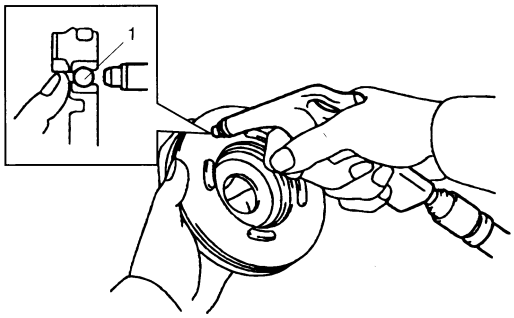

I2RH0B510174-01

Forward and Reverse Clutch Assembly Components

S7RW0A5106041

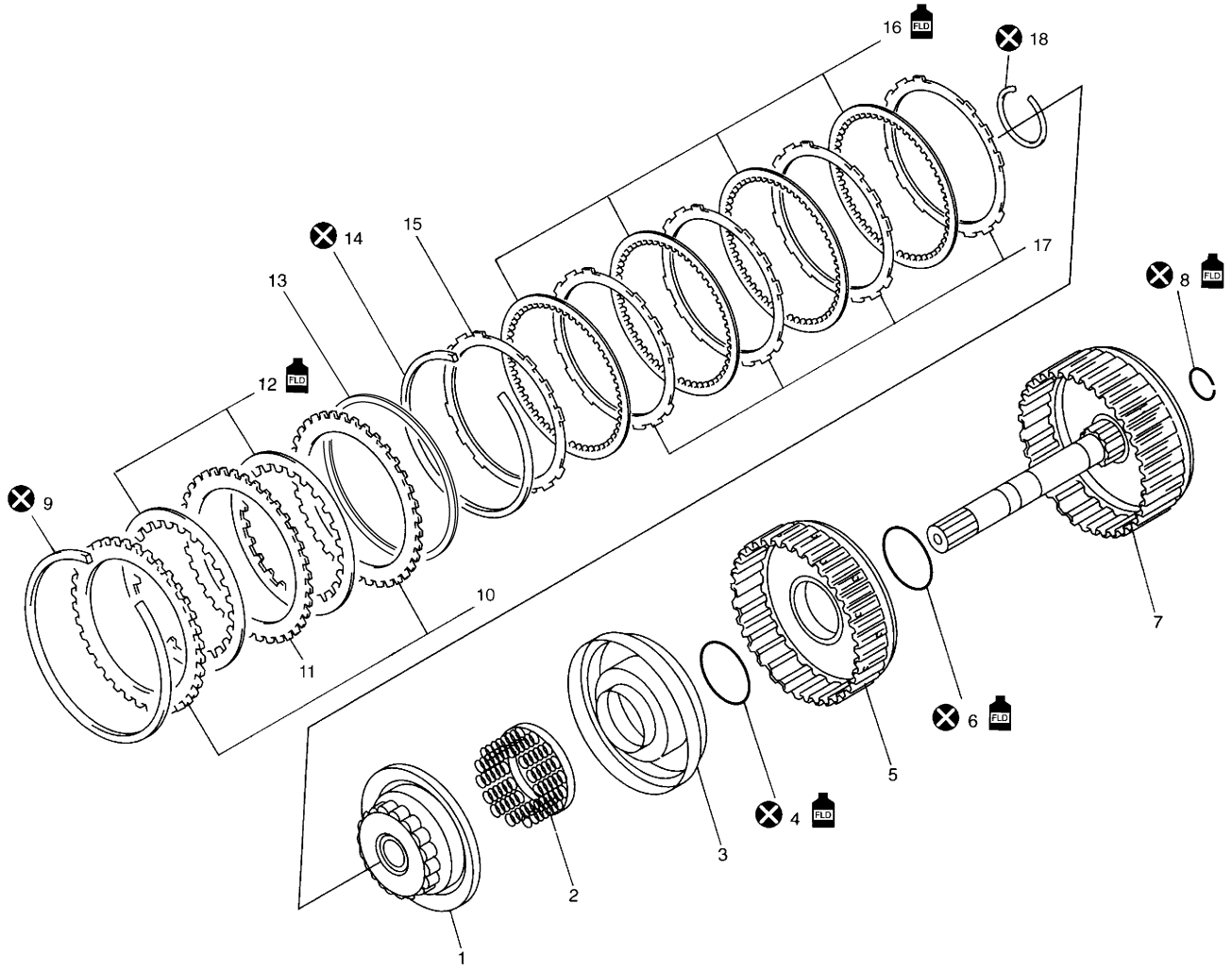

I3RM0B510061-01

1. Forward clutch balancer	8. Intermediate shaft seal ring	15. Forward clutch retaining plate
2. Forward clutch return spring subassembly	9. Reverse clutch plate snap ring	16. Forward clutch disc
3. Forward clutch piston	10. Reverse clutch retaining plate	17. Forward clutch separator plate
4. Forward clutch piston O-ring	11. Reverse clutch separator plate	18. Balancer snap ring
5. Forward clutch drum	12. Reverse clutch disc	FLD : Apply automatic transaxle fluid.
6. Forward clutch drum O-ring	13. Reverse clutch cushion plate	⊗ : Do not reuse.
7. Intermediate shaft subassembly	14. Forward clutch plate snap ring	

Forward and Reverse Clutch Assembly Preliminary Check

S7RW0A5106042

1) Install forward and reverse clutch assembly (1) to transaxle rear cover (2), blow in compressed air (400 – 800 kPa, 4 – 8 kg/cm^2, 57 – 113 psi) through oil hole (4) of transaxle rear cover with the special tool attached on the upper surface of reverse clutch retaining plate (3), and measure reverse clutch piston stroke.
   If piston stroke exceeds specified value, disassemble, inspect and replace inner parts.

   Special tool
   (A): 09900–20607
   (B): 09900–20701

Reverse clutch piston stroke
1.20 – 1.60 mm (0.047 – 0.063 in.)

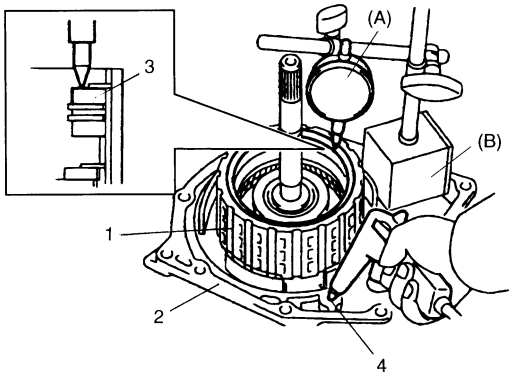

I2RH0B510176-01

2) Blow compressed air (400 – 800 kPa, 4 – 8 kg/cm^2, 57 – 113 psi) through oil hole (1) of transaxle rear cover with the special tool attached on the upper surface of forward clutch retaining plate, and measure forward clutch piston stroke.
If piston stroke exceeds specified value, disassemble, inspect and replace inner parts.

Special tool
(A): 09900–20607
(B): 09900–20701
(C): 09952–06020

Forward clutch piston stroke
1.30 – 1.50 mm (0.051 – 0.059 in.)

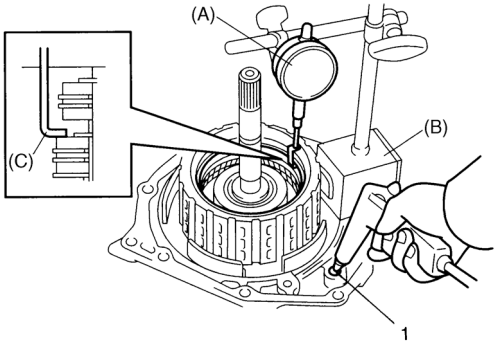

I2RH0B510177-02

Forward and Reverse Clutch Assembly Disassembly and Reassembly

S7RW0A5106043

⚠ CAUTION

When clutch disc, retaining plate and/or separator plate of forward clutch have been replaced, all learned contents, which have been stored in TCM memory by executing learning control, should be initialized referring to "Learning Control Initialization". Neglecting this initialization may cause excessive shift shock.

Disassembly

1) Remove reverse clutch plate snap ring (1) and take out reverse clutch retaining plate, discs, separator plates and clutch cushion plate from intermediate shaft subassembly.

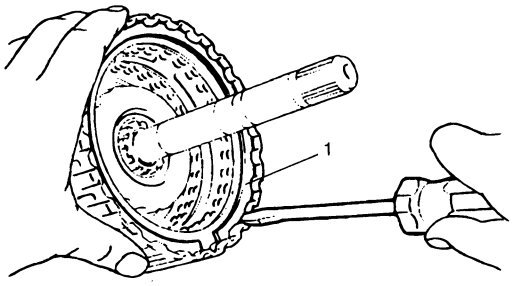

I2RH0B510178-01

2) Remove forward clutch plate snap ring (1) and take out forward clutch retaining plate, discs and separator plates from forward clutch drum.

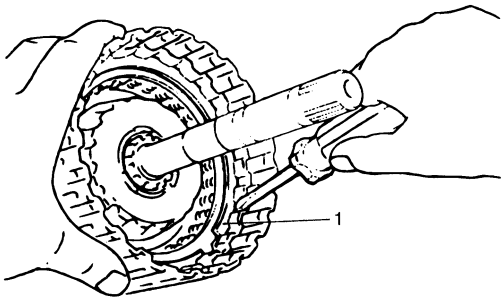

I2RH0B510179-01

3) Remove balancer snap ring by using special tool and hydraulic press.

Special tool
(A): 09926–97610

⚠ CAUTION

Do not press forward clutch return spring subassembly in over 1.5 mm (0.059 in.). Excessive compression may cause damage to return spring subassembly and/or balancer.

4) Remove forward clutch balancer (1).

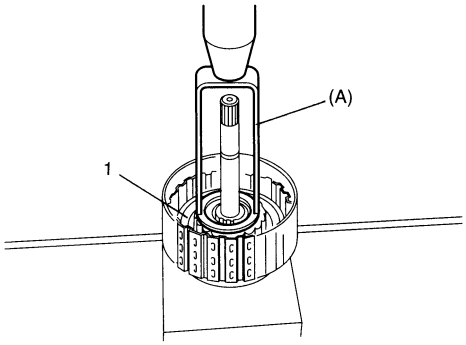

I2RH0B510180-01

5) Remove forward clutch return spring subassembly (1).

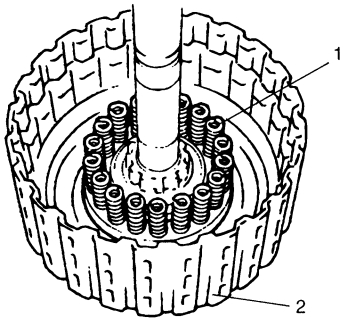

I2RH0B510181-01

2. Intermediate shaft subassembly

6) Install intermediate shaft subassembly (1) to transaxle rear cover (2). Apply compressed air (400 – 800 kPa, 4 – 8 kg/cm^2, 57 – 113 psi) to oil hole (3) of transaxle rear cover to remove forward clutch piston (4).

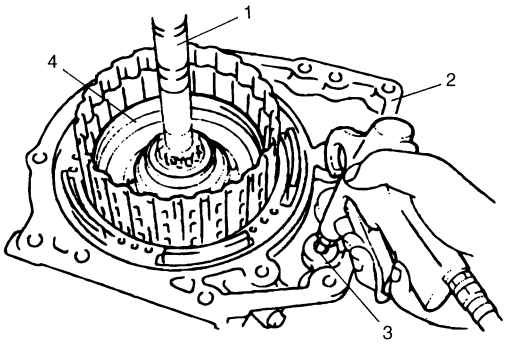

I2RH0B510182-01

7) Apply compressed air (400 – 800 kPa, 4 – 8 kg/cm^2, 57 – 113 psi) to oil hole (1) of transaxle rear cover to remove forward clutch drum (2).

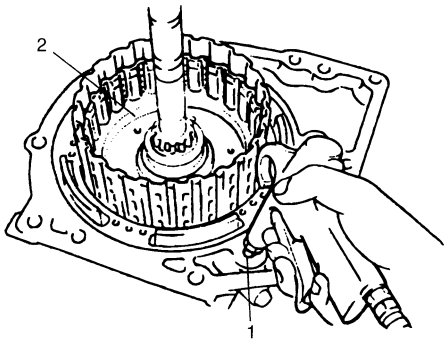

I2RH0B510183-01

8) Remove forward clutch piston O-ring (1) from intermediate shaft subassembly (2).

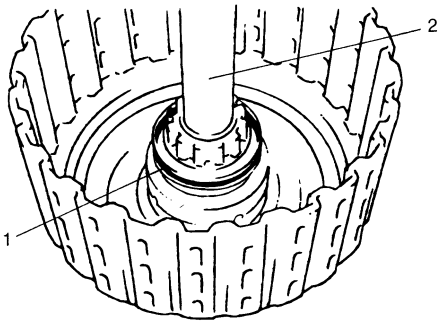

I2RH0B510184-01

9) Remove forward clutch drum O-ring (1) from forward clutch drum (2).

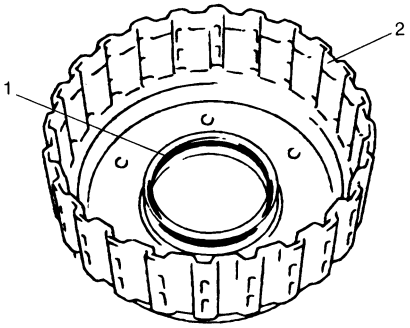

I2RH0B510185-01

10) Remove intermediate shaft seal ring (1) from intermediate shaft subassembly (2).

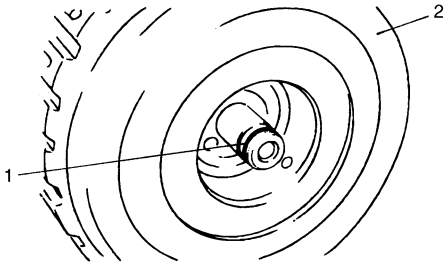

I2RH0B510186-01

Reassembly

Reverse disassembly procedure for assembly, noting the following points.

- Before assembling, apply automatic transaxle fluid to component parts.
- Replace O-rings and seal ring with new ones.
- Do not damage forward clutch return spring subassembly and balancer (1) by pressing forward clutch return spring subassembly passing through its original installing position over 1.5 mm (0.059 in.).

Special tool
(A): 09926–97610

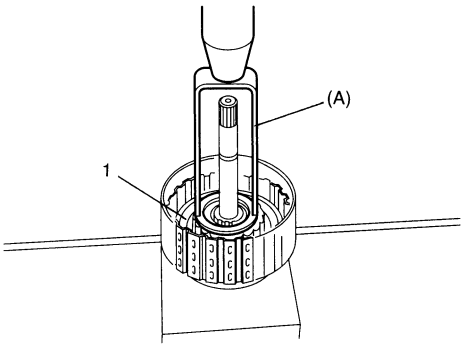

I2RH0B510180-01

- Apply A/T fluid to forward clutch separator plates (1), discs (2) and retaining plate (3).
- Install forward clutch separator plates (1), discs (2) and retaining plate (3), then snap ring (4) to forward clutch drum.

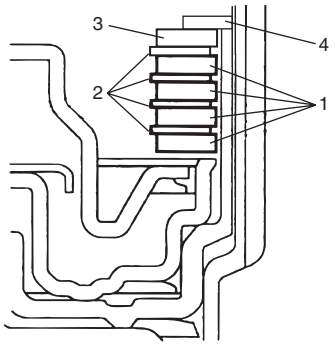

I5RW0C510062-01

- Install forward clutch plate snap ring so that its both ends would be positioned in correct locations as shown in figure.

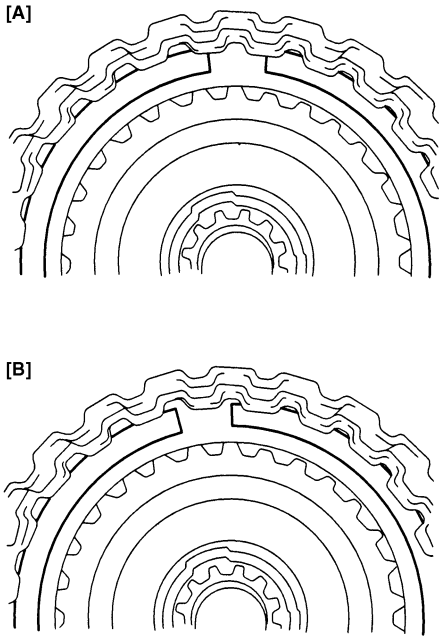

I2RH0B510188-01

[A]: Correct	[B]: Incorrect

- Measure forward clutch piston stroke in the same manner as “Forward and Reverse Clutch Assembly Preliminary Check”.
  When piston stroke is out of specification, select forward clutch retaining plate with proper thickness from among the following table and replace it.

Special tool
(A): 09900–20607
(B): 09900–20701
(C): 09952–06020

Forward clutch piston stroke
1.30 – 1.50 mm (0.051 – 0.059 in.)

Available forward clutch retaining plate thickness

Thickness	Identification mark
3.0 mm (0.118 in.)	1
3.1 mm (0.122 in.)	5
3.2 mm (0.126 in.)	2
3.3 mm (0.130 in.)	6
3.4 mm (0.134 in.)	3
3.5 mm (0.138 in.)	7
3.6 mm (0.142 in.)	4

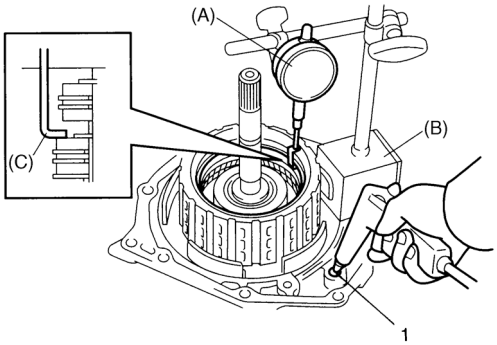

I2RH0B510177-02

1. Oil hole

- Install reverse clutch cushion plate (1) in correct direction as shown in figure.
- Apply A/T fluid to reverse clutch cushion plate (1), reverse clutch separator plate (2), discs (3) and retaining plate (4).
- Install reverse clutch cushion plate (1), reverse clutch separator plate (2), discs (3), retaining plate (4) and then snap ring (5) to intermediate shaft subassembly.

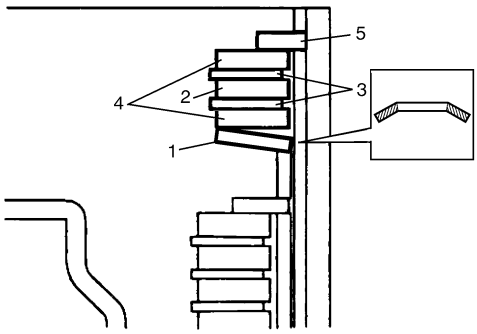

I3RM0B510062-01

- Install reverse clutch plate snap ring so that its both ends would be positioned in correct locations as shown in figure.

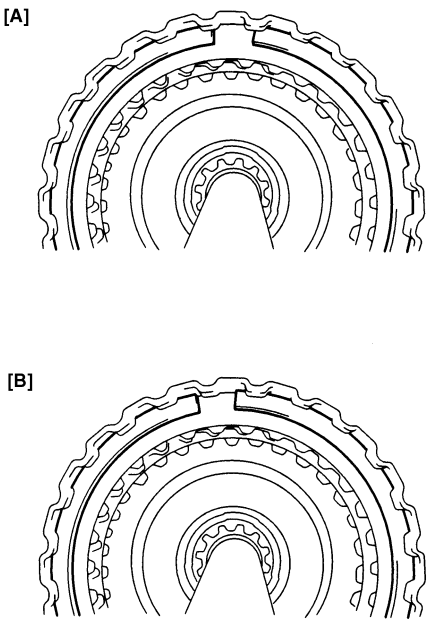

I2RH0B510190-01

[A]: Correct	[B]: Incorrect

- Measure reverse clutch piston stroke in the same manner as “Forward and Reverse Clutch Assembly Preliminary Check”.
  When piston stroke is out of specification, select reverse clutch retaining plate with proper thickness from among the following table and replace it.

  Special tool
  (A): 09900–20607
  (B): 09900–20701

  Reverse clutch piston stroke
  1.20 – 1.60 mm (0.047 – 0.063 in.)

  Available reverse clutch retaining plate thickness

Thickness	Identification mark
3.0 mm (0.118 in.)	1
3.2 mm (0.126 in.)	2
3.4 mm (0.134 in.)	3
3.6 mm (0.142 in.)	4

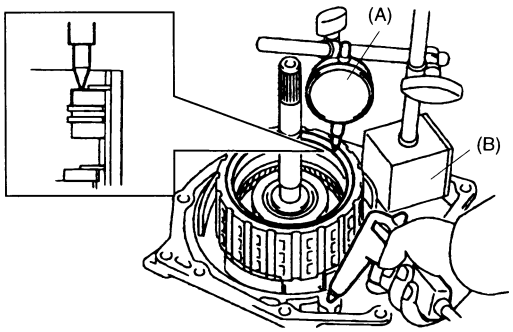

I2RH0B510191-01

Forward and Reverse Clutch Assembly Inspection

S7RW0A5106044

Clutch, Discs, Separator Plates and Retaining Plate
Check that sliding surfaces of discs, separator plates and retaining plate are not worn hard or burnt. If necessary, replace.

NOTE

- **If disc lining is exfoliated or discolored, replace all discs.**
- **Before assembling new discs, soak them in A/T fluid for at least two hours.**

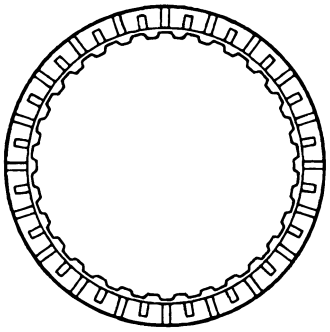

I2RH0B510192-01

Forward Clutch Return Spring Subassembly
Measure free length of forward clutch return spring.

Forward clutch return spring free length
24.04 mm (0.946 in.)

NOTE

Do not apply excessive force when measuring spring free length. Perform measurement at several points.

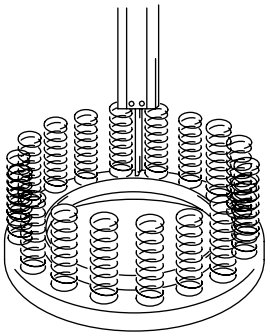

I2RH0B510193-01

Forward Clutch Piston Lip and Forward Clutch Balancer Lip

Check each lip for wear, deformation, cut and/or hardening. If necessary, replace.

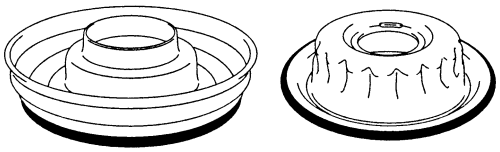

I2RH0B510194-01

Forward Clutch Drum Lip

Check each lip for wear, deformation, cut and/or hardening. If necessary, replace.

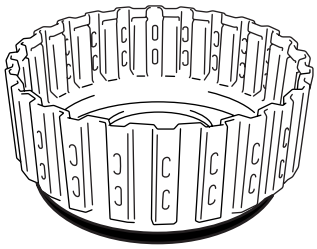

I2RH0B510195-01

2nd Brake Piston Assembly Components

S7RW0A5106045

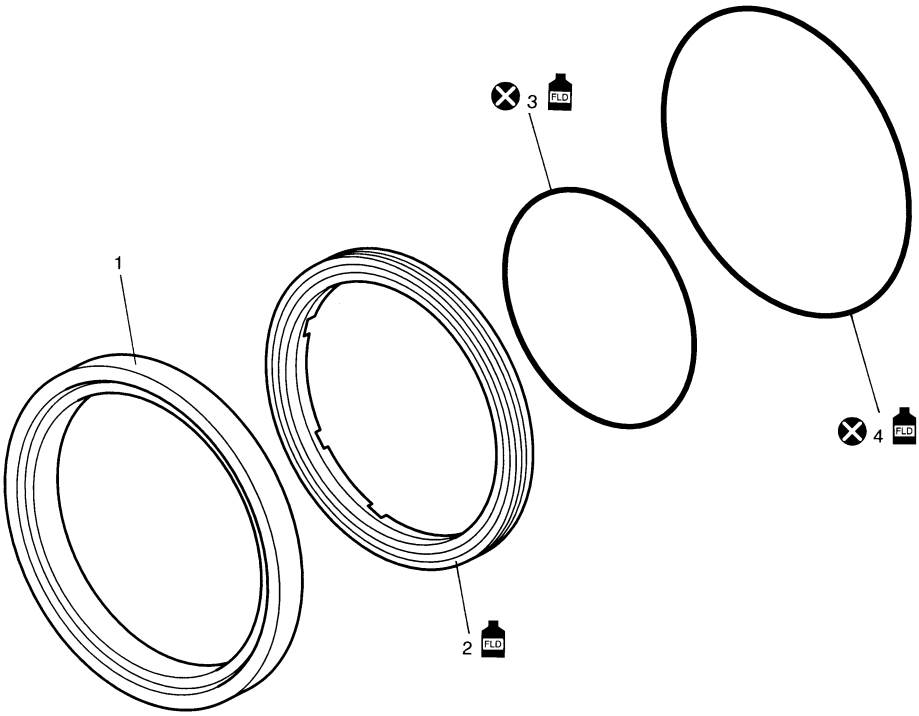

I2RH0B510196-01

1. 2nd brake cylinder	4. Outer O-ring
2. 2nd brake piston	FLD : Apply automatic transaxle fluid.
3. Inner O-ring	⊗ : Do not reuse.

2nd Brake Piston Assembly Disassembly and Reassembly

S7RW0A5106046

Disassembly

1) Apply compressed air (400 – 800 kPa, 4 – 8 kg/cm^2, 57 – 113 psi) to oil hole (1) of 2nd brake cylinder (3) to remove 2nd brake piston (2).

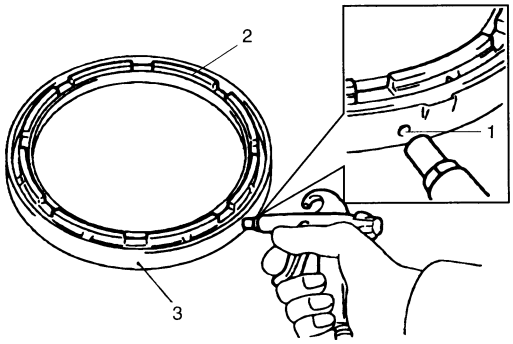

I2RH0B510197-01

2) Remove inner O-ring (1) and outer O-ring (2).

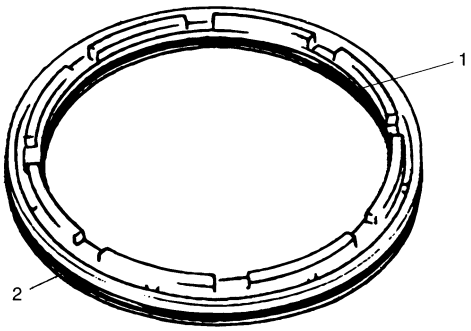

I2RH0B510198-01

Reassembly

Reverse disassembly procedure for assembly, noting the following points.

- Use new O-rings. Apply A/T fluid to the O-rings, before installation.
- Install 2nd brake piston (1) to which A/T fluid is applied to 2nd brake cylinder (2).
  Do not damage O-ring when installing 2nd brake piston.

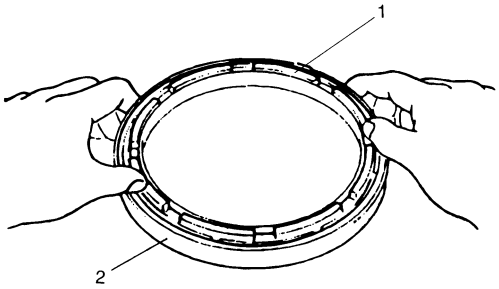

I2RH0B510199-01

Transaxle Rear Cover (O/D and 2nd Coast Brake Piston) Assembly Components

S7RW0A5106047

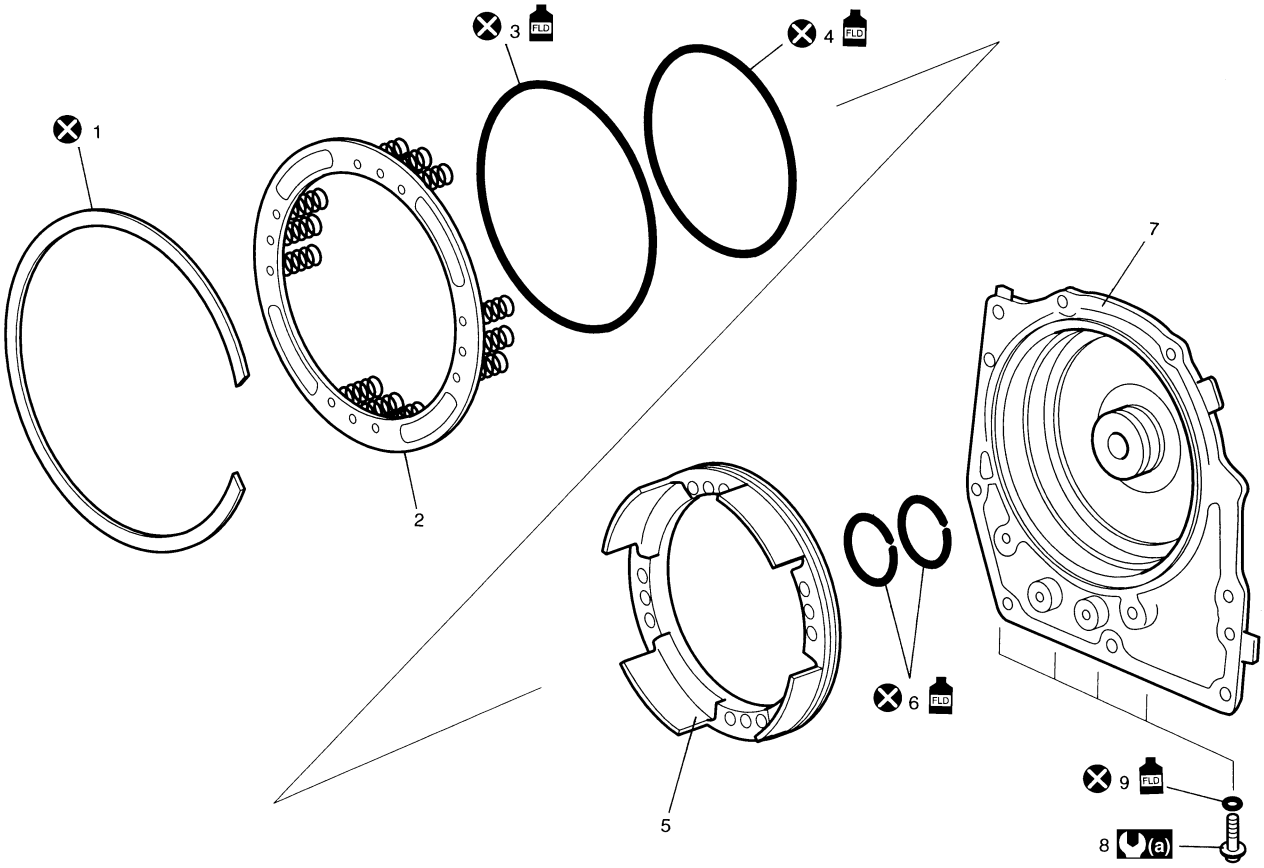

I5RW0C510063-01

1. Snap ring	5. O/D and 2nd coast brake piston	9. Rear cover plug O-ring
2. O/D and 2nd coast brake return spring subassembly	6. Rear cover seal ring	: Apply automatic transaxle fluid.
3. O/D and 2nd coast brake piston front O-ring	7. Transaxle rear cover	: Do not reuse.
4. O/D and 2nd coast brake piston rear O-ring	8. Rear cover plug	: 7.5 N·m (0.75 kgf-m, 5.5 lb-ft)

Transaxle Rear Cover (O/D and 2nd Coast Brake Piston) Assembly Disassembly and Reassembly

S7RW0A5106048

Disassembly

1) Remove snap ring by using special tools and hydraulic press.

Special tool
(A): 09926–96030
(B): 09946–06710

⚠ CAUTION

Do not press O/D and 2nd coast brake return spring subassembly in over 1.0 mm (0.039 in.).
Excessive compression may cause damage to O/D and 2nd coast brake return spring subassembly and/or piston.

2) Remove O/D and 2nd coast brake return spring assembly.

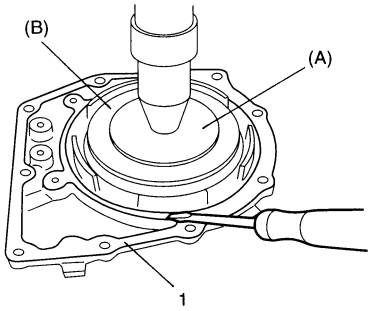

I2RH0B510201-01

1.	Transaxle rear cover

3) Apply compressed air (400 – 800 kPa, 4 – 8 kg/cm^2, 57 – 113 psi) to oil hole (2) of transaxle rear cover (1) to remove O/D and 2nd coast brake piston.

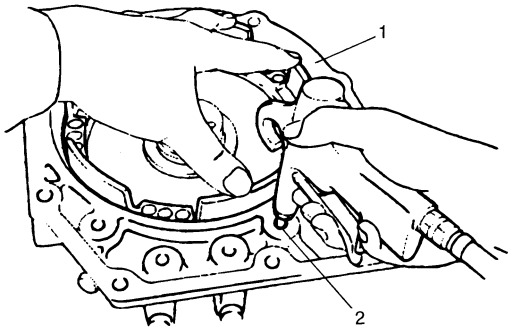

I2RH0B510202-01

4) Remove O/D and 2nd coast brake piston front O-ring (1) and rear O-ring (2).

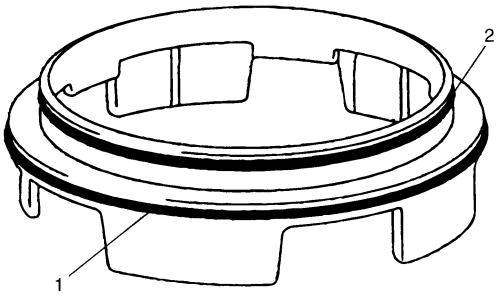

I2RH0B510203-01

5) Remove rear cover seal rings (1).

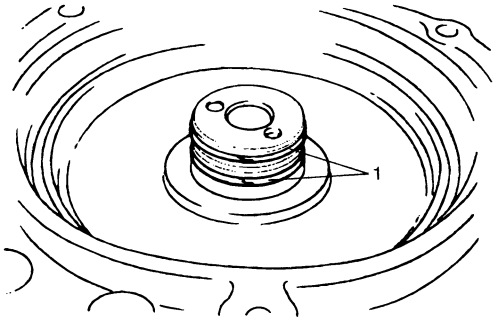

I2RH0B510204-01

6) Remove rear cover plugs (1).

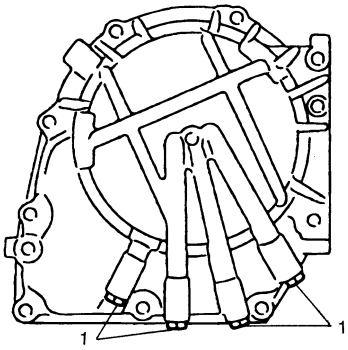

I2RH0B510205-01

Reassembly
Reverse disassembly procedure for assembly, noting the following points.

- Use new seal rings and O-rings. Apply A/T fluid to seal rings and O-rings before installation.
- Tighten rear cover plugs to specified torque.

  Tightening torque
  Rear cover plug: 7.5 N·m (0.75 kgf-m, 5.5 lb-ft)

- Before installing rear cover seal ring, apply A/T fluid to ring.
  First, tighten seal ring to 5 mm (0.197 in.), then install seal ring.
- Do not open rear cover seal ring too wide to attach.

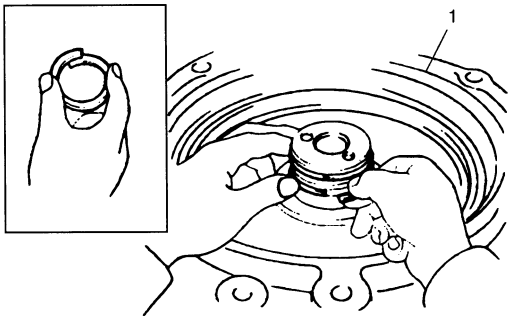

I2RH0B510206-01

1. Transaxle rear cover

- Do not damage O/D and 2nd coast brake return spring subassembly and piston by pressing in O/D and 2nd coast brake return spring subassembly passing through its original installing position over 1.0 mm (0.039 in.).

  Special tool
  (A): 09926–96030
  (B): 09946–06710

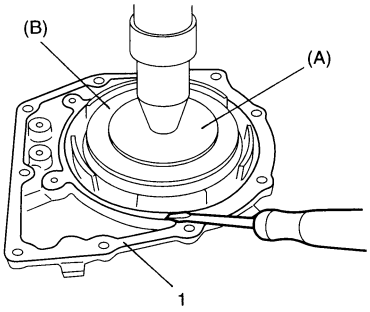

I2RH0B510201-01

1. Transaxle rear cover

Transaxle Rear Cover (O/D and 2nd Coast Brake Piston) Assembly Inspection

S7RW0A5106049

O/D and 2nd Coast Brake Return Spring Subassembly
Measure free length of O/D and 2nd coast brake return spring subassembly.

Free length of O/D and 2nd coast brake return spring subassembly
"a": 18.99 mm (0.748 in.)

NOTE

- **Do not apply excessive force when measuring spring free length.**
- **Perform measurement at several points.**

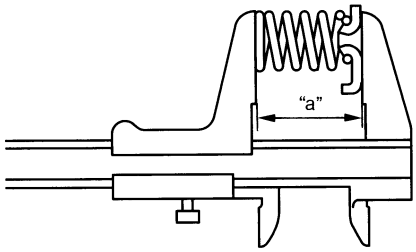

I2RH0B510207-01

Transaxle Rear Cover Bush
Measure transaxle rear cover bush bore by using special tool.
If measured transaxle rear cover bush bore is out of specifications, replace transaxle rear cover with new one. In replacement, intermediate shaft subassembly also needs to be checked. Replace intermediate shaft subassembly, if necessary.

Special tool
(A): 09900–20605

Transaxle rear cover bush bore
Standard: 13.94 – 13.96 mm (0.549 – 0.550 in.)

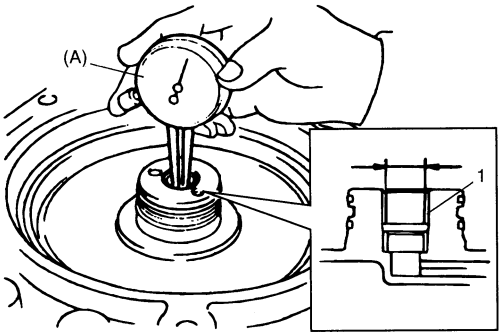

I2RH0B510208-01

Countershaft Assembly Components

S7RW0A5106050

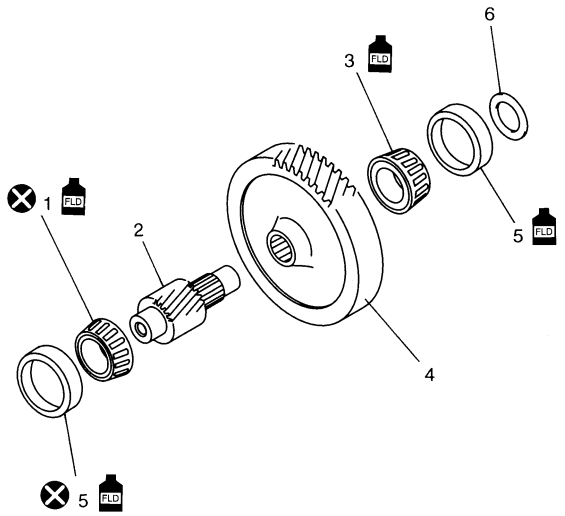

I2RH0B510209-01

1. Countershaft RH bearing	5. Bearing cap
2. Countershaft	6. Countershaft bearing shim
3. Countershaft LH bearing	FLD : Apply automatic transaxle fluid.
4. Reduction driven gear	⊗ : Do not reuse.

Countershaft Assembly Disassembly and Reassembly

S7RW0A5106051

Disassembly

1) Remove countershaft LH bearing (1) and reduction driven gear (2) at once by using special tool and hydraulic press.

Special tool
(A): 09925–98221

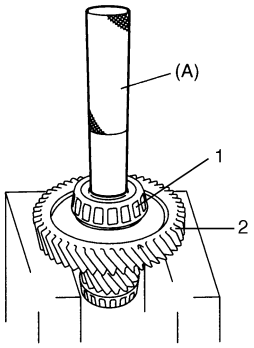

I2RH0B510210-01

2) Remove countershaft RH bearing (1) by using special tools.

Special tool
(A): 09913–61510
(B): 09926–58010

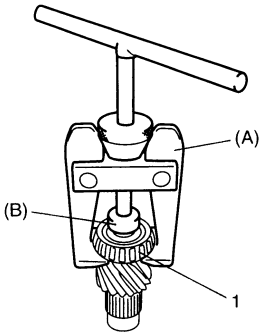

I2RH0B510211-01

Reassembly

1) Install new countershaft RH bearing (1) by using special tool and hydraulic press.

Special tool
(A): 09913–84510

NOTE

Replace countershaft RH bearing together with bearing cup as a set.

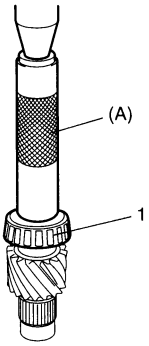

I2RH0B510212-01

2) Install reduction driven gear (1) with special tools and hydraulic press.

Special tool
(A): 09913–84510
(B): 09925–88210

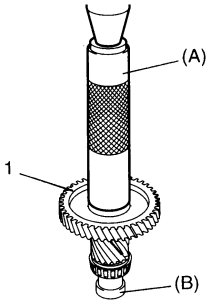

I2RH0B510213-01

3) Install countershaft LH bearing (1) with special tools and hydraulic press.

Special tool
(A): 09913–84510
(B): 09925–88210

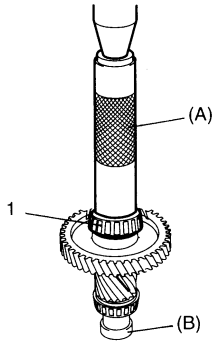

I2RH0B510214-01

Valve Body Assembly Components

S7RW0A5106052

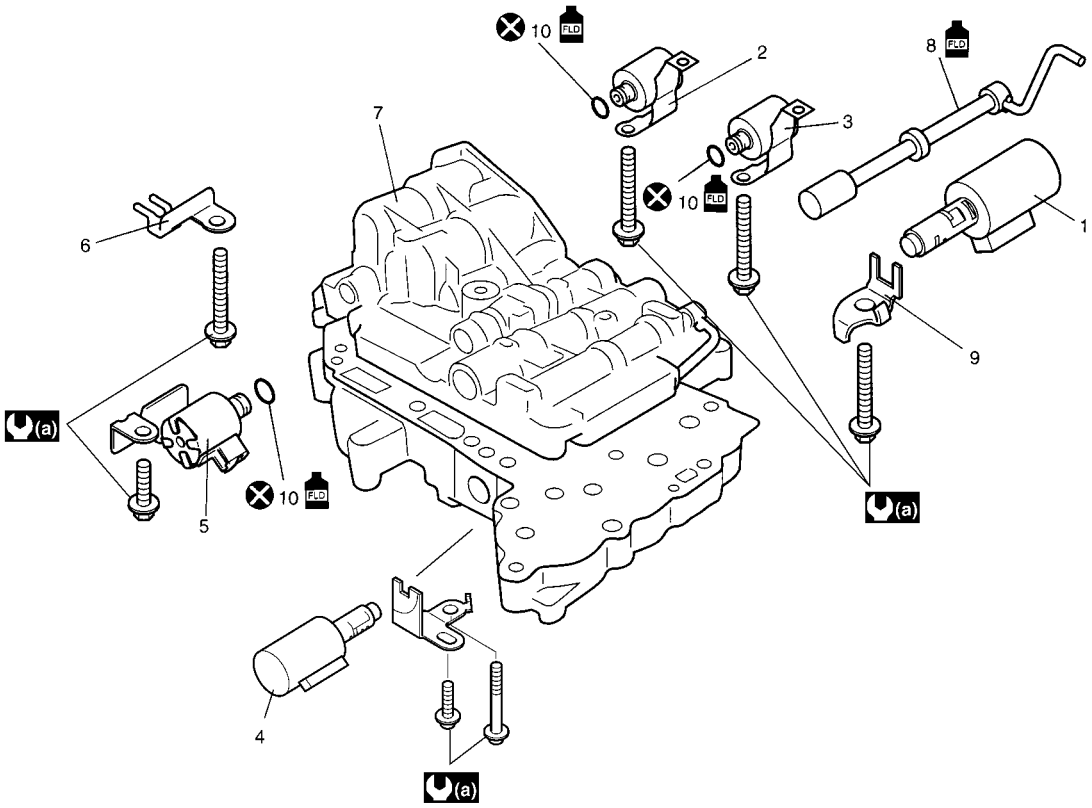

I4RS0A510044-01

1. Pressure control solenoid valve	6. Temperature sensor clamp	FLD : Apply automatic transaxle fluid.
2. Shift solenoid valve-A (No.1)	7. Valve body assembly	(a) : 11 N·m (1.1 kgf-m, 8.0 lb-ft)
3. Shift solenoid valve-B (No.2)	8. Manual valve	⊗ : Do not reuse.
4. TCC pressure control solenoid valve	9. Solenoid lock plate	
5. Timing solenoid valve	10. O-ring	

Valve Body Assembly Disassembly and Reassembly

S7RW0A5106053

⚠ CAUTION

When replacing pressure control solenoid valve and/or TCC pressure control solenoid valve, it is strictly required to replace it together with valve body assembly as a set. Replacing pressure control solenoid valve and/or TCC pressure control solenoid valve independently may cause excessive shift shock.

Disassembly

1) Pull out manual valve (1).

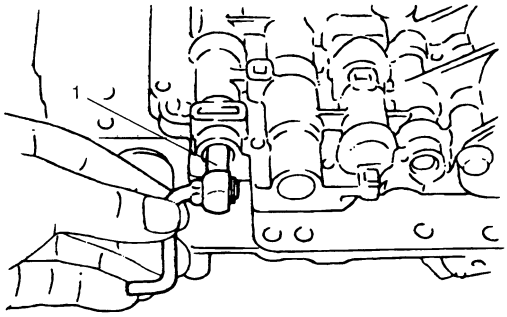

I2RH0B510216-01

2) Remove pressure control solenoid valve (1).

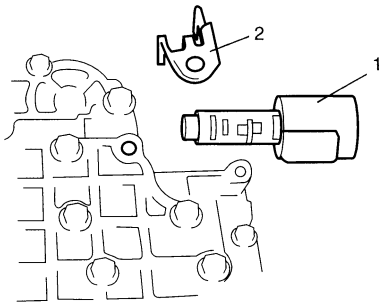

I2RH0B510217-01

2. Solenoid lock plate

3) Remove TCC pressure control solenoid valve (1).

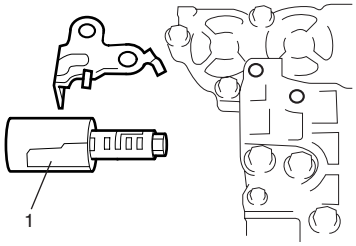

I4RS0A510045-01

4) Remove shift solenoid valve-A (1).

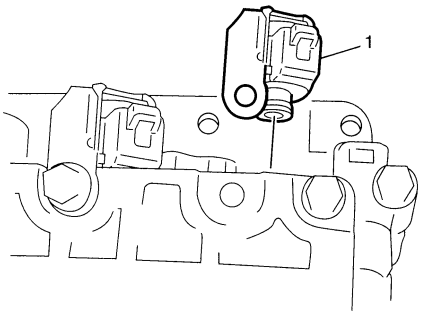

I2RH0B510219-01

5) Remove shift solenoid valve-B (1).

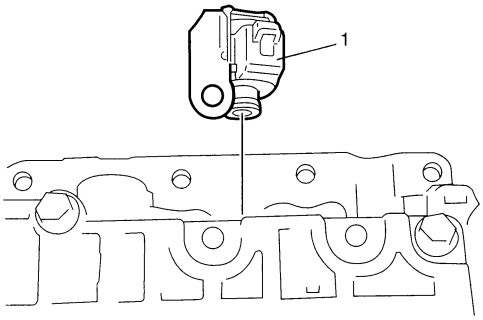

I2RH0B510220-01

6) Remove timing solenoid valve (1).

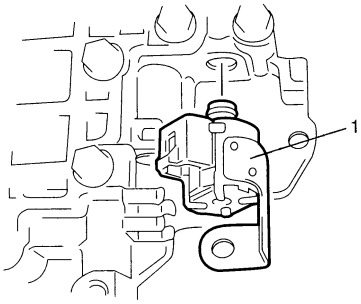

I2RH0B510221-01

7) Remove temperature sensor clamp (1).

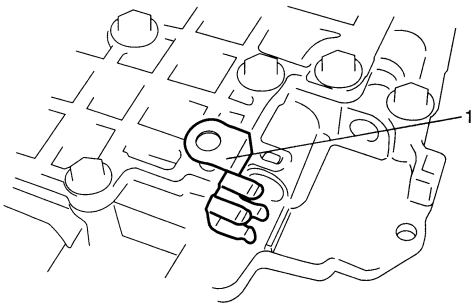

I2RH0B510222-01

Reassembly

Reverse disassembly procedure for assembly, noting the following points.

- Shift solenoid valve-A and -B are identical
- After applying A/T fluid to new O-rings, fit them to solenoid valves, then install solenoid valves to valve body.
- Tighten solenoid valve bolts to specified torque

Tightening torque

Solenoid valve bolt (a): 11 N·m (1.1 kgf-m, 8.0 lb-ft)

Solenoid valve bolt specification

Bolt	Length “a”	Pieces
A (1)	49 mm (1.93 in.)	5
B (2)	20 mm (0.79 in.)	1
C (3)	60 mm (2.36 in.)	1

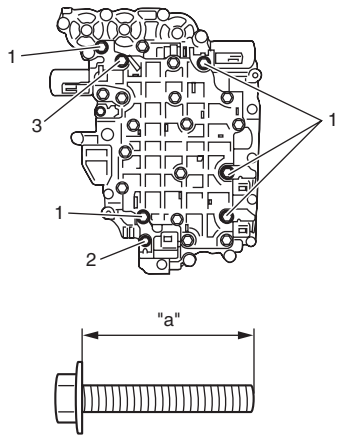

I4RS0A510046-01

Differential Assembly Components

S7RW0A5106054

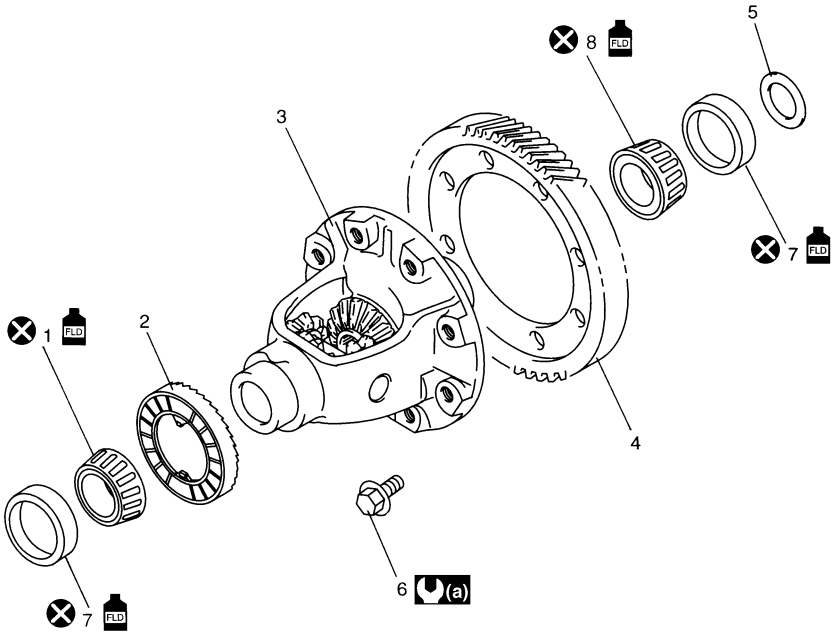

I5RW0C510064-01

1. Differential side RH bearing	5. Side bearing shim	FLD : Apply automatic transaxle fluid.
2. Output shaft speed sensor (VSS) drive gear	6. Final gear bolt	(a) : 78 N·m (7.8 kgf-m, 56.5 lb-ft)
3. Differential case subassembly	7. Side bearing cup	⊗ : Do not reuse.
4. Final gear	8. Differential side LH bearing	

Differential Assembly Disassembly and Reassembly

S7RW0A5106055

Disassembly

1) Remove final gear bolts (1), and then final gear (2).

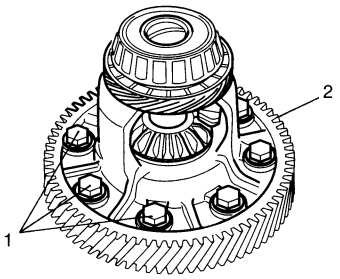

I2RH0B510225-01

2) Remove differential side RH bearing by using special tools.

Special tool
(A): 09926–37610
(B): 09926–37610–001
(C): 09926–37610–003
(D): 09926–37610–002

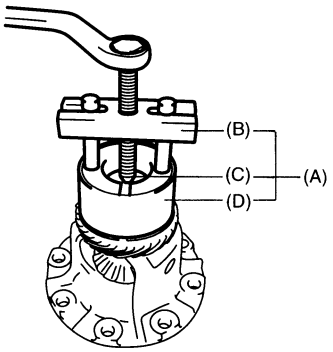

I2RH0B510226-01

3) Remove output shaft speed sensor (VSS) drive gear (1).

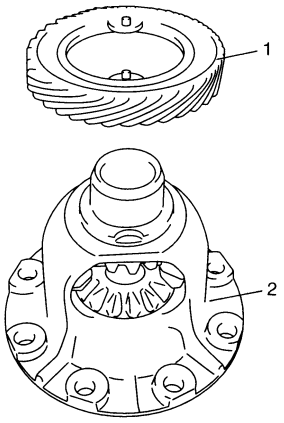

I2RH0B510227-01

2. Differential case subassembly

4) Remove differential side LH bearing by using special tools.

Special tool
(A): 09926–37610
(B): 09926–37610–001
(C): 09926–37610–003
(D): 09926–37610–002

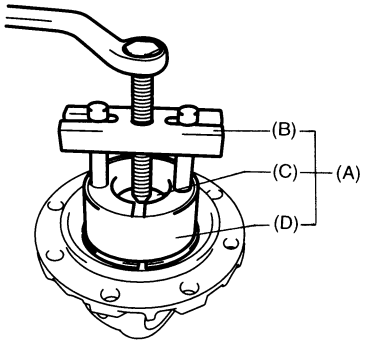

I2RH0B510228-01

Reassembly

⚠ WARNING

- **When taking warmed final driven gear out of vessel, use tongs or the like. Taking out it with bare hand will cause severe burn.**
- **While installing warmed final driven gear, use oven glove such as leather glove. Picking up it with bare hand may cause burn.**

⚠ CAUTION

Do not leave final driven gear in boiling water for longer than 5 min. Overheating the gear may cause strength reduction of gear.

1) Put final driven gear in water vessel, heat and remove when it boils, then remove moisture.

NOTE

After removing moisture on final driven gear, install final driven gear to differential case as quickly as possible.

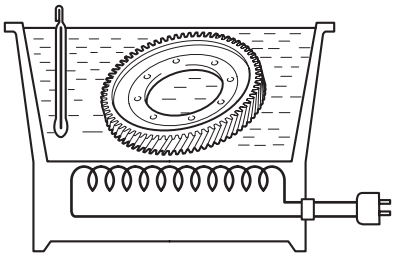

I2RH0B510229-01

2) As shown in figure, facing groove (2) side upward, install final driven gear (1) to differential case.

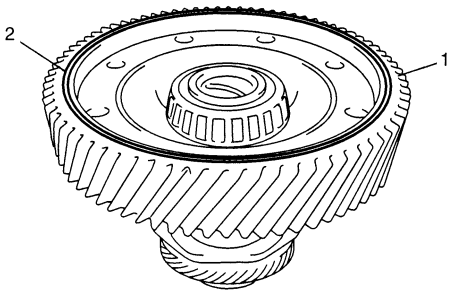

I2RH0B510230-01

3) Tighten final gear bolts (1) to specified torque.

NOTE

To avoid rust, apply A/T fluid to final driven gear after installation.

Tightening torque
Final gear bolt (a): 78 N·m (7.8 kgf-m, 56.5 lb-ft)

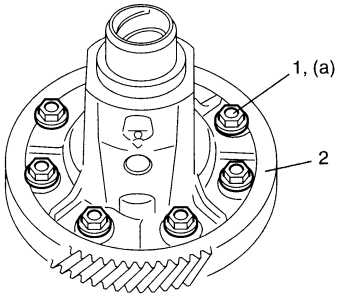

I2RH0B510231-01

2. Final driven gear

4) After applying A/T fluid to output shaft speed sensor (VSS) drive gear (1), install output shaft speed sensor drive gear.

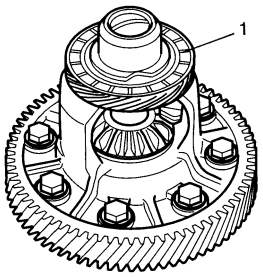

I2RH0B510232-01

5) Install new differential side RH bearing (1) by using special tool and hydraulic press.

NOTE

Replace differential side RH bearing together with bearing cup as a set.

Special tool
(A): 09913–70123

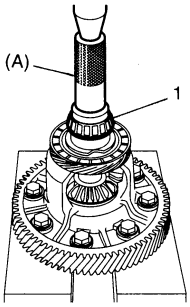

I2RH0B510233-01

6) Install new differential side LH bearing (1) by using special tool and hydraulic press.

NOTE

Replace differential side LH bearing together with bearing cup as a set.

Special tool
(A): 09913–70123

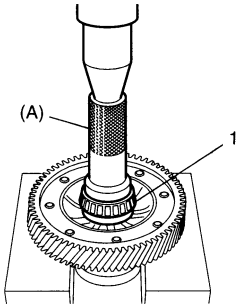

I2RH0B510234-01

Differential Assembly Inspection

S7RW0A5106056

1) Hold differential case subassembly with soft jawed vice and set special tools as shown.

Special tool
(A): 09900–20607
(B): 09900–20701

2) Measure differential gear thrust play.

<u>Differential gear thrust play</u>
Standard: 0.06 – 0.22 mm (0.002 – 0.009 in.)

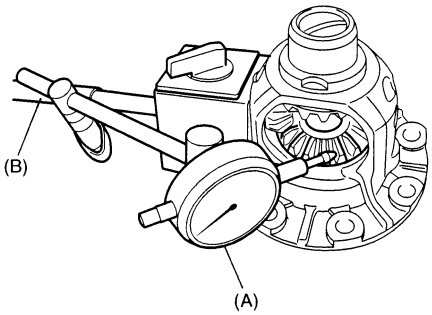

I2RH0B510235-01

3) If thrust play is out of specification, replace differential case subassembly.

Torque Converter Housing Disassembly and Reassembly

S7RW0A5106057

Disassembly

1) Remove fluid reservoir RH plate (1) and lubrication tube clamp (2).

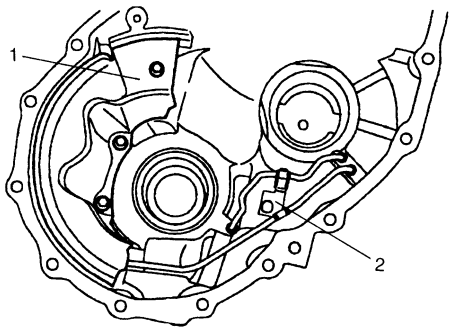

I2RH0B510236-01

2) Remove lubrication LH tube (1) and RH tube (2).

NOTE

Do not bend lubrication tube with excessive force.

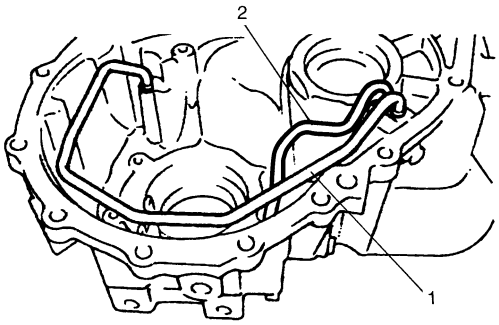

I2RH0B510237-01

3) Remove differential side oil seal (1).

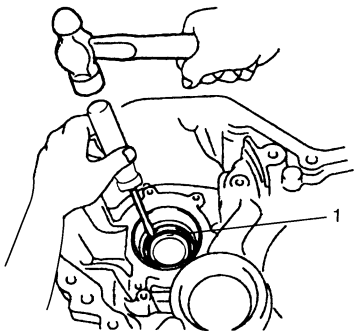

I2RH0B510238-01

4) Remove countershaft RH bearing cup by using special tools.

Special tool
(A): 09944–96011
(B): 09942–15511

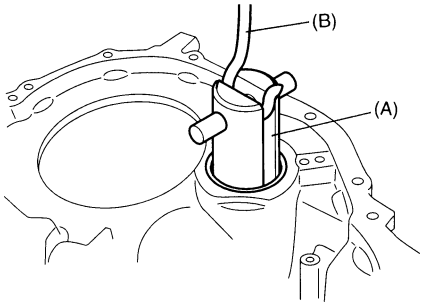

I2RH0B510239-01

5) Remove differential side RH bearing cup by using special tools.

Special tool
(A): 09944–96011
(B): 09942–15511

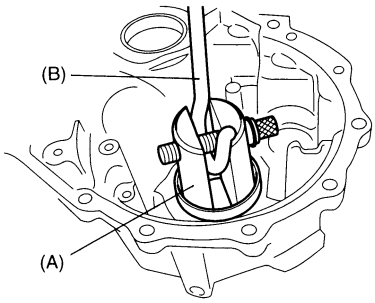

I2RH0B510240-01

6) Remove torque converter case plugs (1).

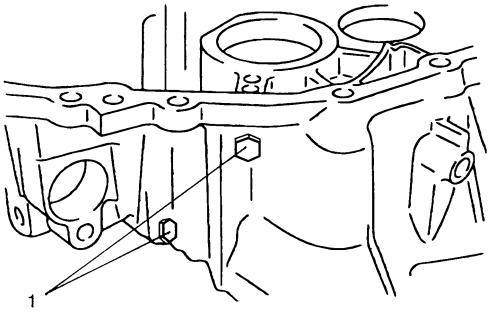

I2RH0B510241-01

Reassembly

1) After applying A/T fluid to new O-rings, fit them to housing plugs. Finally install plugs to torque converter housing.

Tightening torque
Torque converter housing plug (a): 7.5 N·m (0.75 kgf-m, 5.5 lb-ft)

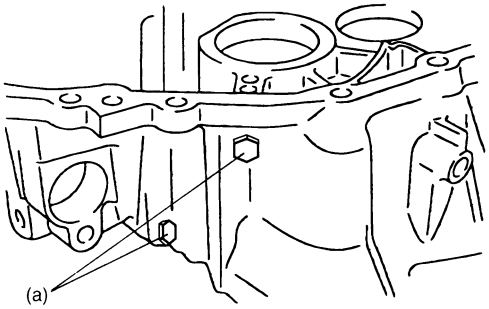

I2RH0B510242-01

2) Using special tools, assemble differential side RH bearing cup.

Special tool
(A): 09924–74510
(B): 09944–88220

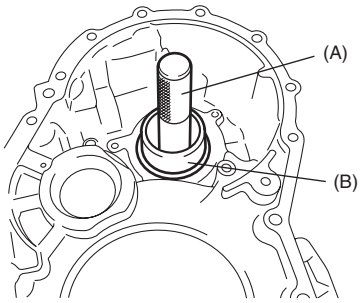

I3RM0B510063-01

3) Using special tool, install countershaft RH bearing cup.

Special tool
(A): 09924–74510
(B): 09944–88220

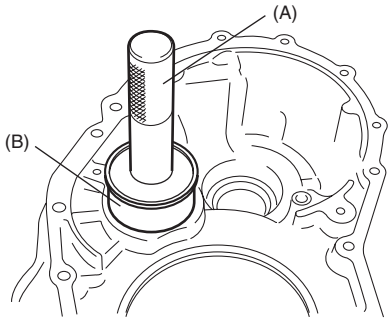

I3RM0B510064-01

4) Using special tools, install new differential side oil seal to torque converter housing.

Special tool
(A): 09913–75510

<u>Differential side oil seal installing depth</u>
"a": 13.2 – 14.2 mm (0.52 – 0.56 in.)

5) Apply grease to oil seal lip.

"A": Grease 99000–25030 (SUZUKI Super Grease C)

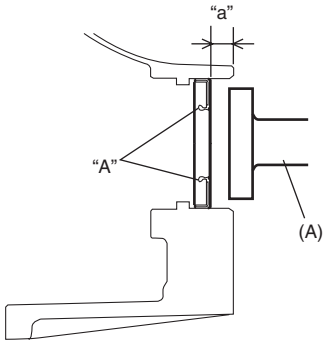

I5RW0C510065-02

6) Install lubrication LH tube (1) and RH tube (2).

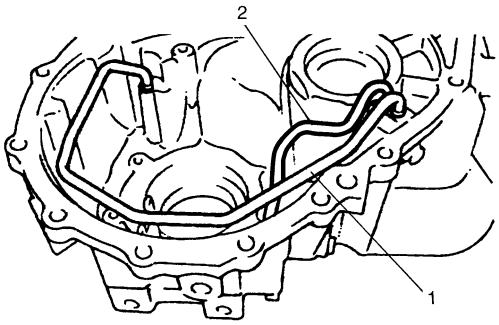

I2RH0B510237-01

7) Install fluid reservoir RH plate (1) and lubrication tube clamp (2).

Tightening torque
Lubrication tube clamp bolt (a): 5.5 N·m (0.55 kgf-m, 4.0 lb-ft)
Fluid reservoir RH plate bolt (b): 5.5 N·m (0.55 kgf-m, 4.0 lb-ft)

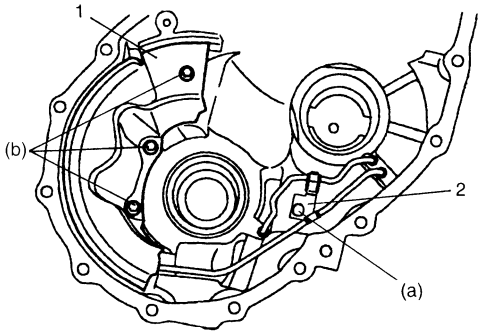

I2RH0B510246-01

Transaxle Case Disassembly and Reassembly

S7RW0A5106058

Disassembly

1) Remove differential side oil seal (1).

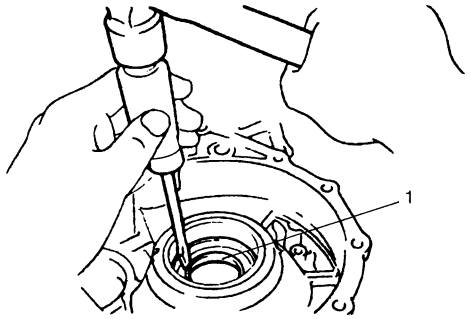

I2RH0B510247-01

2) Remove countershaft LH bearing cup and shim with special tools.

Special tool
(A): 09944–96011
(B): 09942–15511

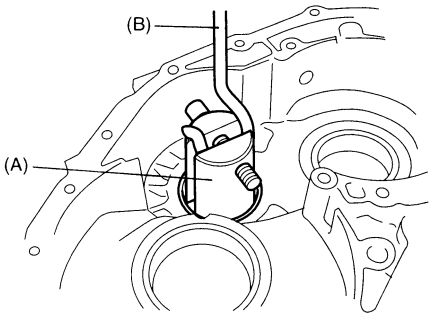

I2RH0B510248-01

3) Remove differential side LH bearing cup and shim with special tools.

Special tool
(A): 09944–96011
(B): 09942–15511

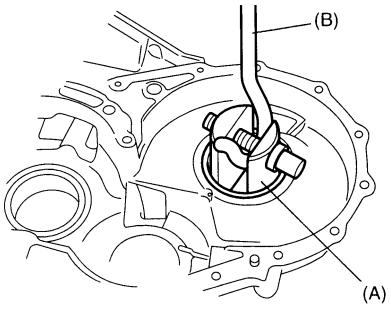

I2RH0B510249-01

Reassembly

1) Using special tools, assemble shim and differential side LH bearing cup.

NOTE

Use shim with same thickness as the removed one.

Special tool
(A): 09924–74510
(B): 09944–88220

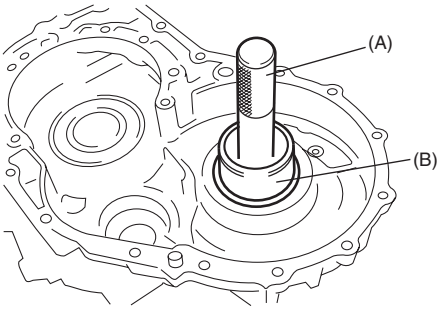

I3RM0B510065-01

2) Using special tools, assemble shim and countershaft LH bearing cup.

NOTE

Use shim with same thickness as the removed one.

Special tool
(A): 09924–74510
(B): 09944–88220

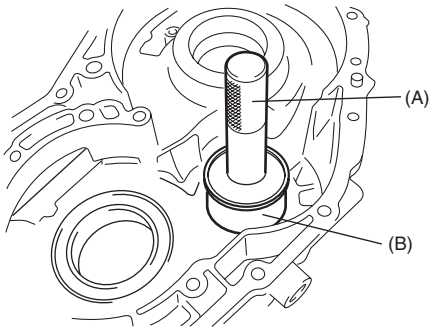

I3RM0B510066-01

3) Install new differential side oil seal to transaxle case by using special tools.

Special tool
(A): 09913–75810

Differential side oil seal installing depth
"a": 3.8 – 4.8 mm (0.15 – 0.19 in.)

4) Apply grease to oil seal lip.

"A": Grease 99000–25030 (SUZUKI Super Grease C)

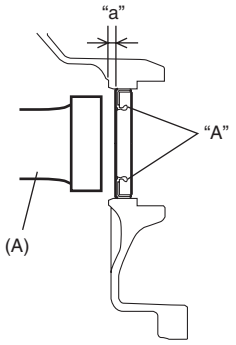

I5RW0C510066-02

Automatic Transaxle Unit Inspection and Adjustment

S7RW0A5106059

Inspection
Brake discs
Dry and inspect them for pitting, burn flaking, significant wear, glazing, cracking, charring and chips or metal particles imbedded in lining.
If discs show any of the above conditions, replacement is required.

NOTE

- **If disc lining is exfoliated or discolored, replace all discs.**
- **Before assembling new discs, soak them in A/T fluid for at least two hours.**

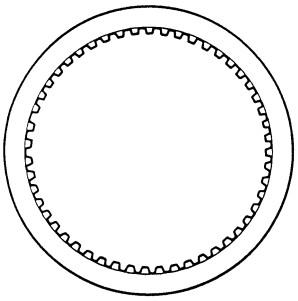

I2RH01510147-01

Brake separator plates and retaining plates
Dry plates and check for discoloration. If plate surface is smooth and even color smear is indicated, plate should be reused. If severe heat spot discoloration or surface scuffing is indicated, plate must be replaced.

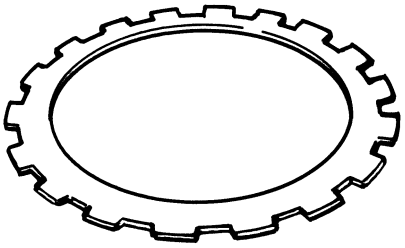

I2RH0B510253-01

Brake return spring subassembly
Measure free length of each brake return springs. Evidence of extreme heat or burning in the area of clutch may have caused springs to take heat set and would require their replacement.

Free length of 1st & reverse brake return spring subassembly
"a": 21.71 mm (0.855 in.)

Free length of 2nd brake return spring subassembly
"a": 15.85 mm (0.624 in.)

NOTE

- **Do not apply excessive force when measuring spring free length.**
- **Perform measurement at several points.**

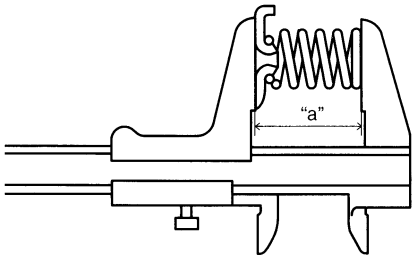

I2RH0B510173-01

One-way clutch No.1 assembly

1) Install one-way clutch No.1 assembly (2) to rear planetary sun gear subassembly (1).
2) Securing rear planetary sun gear subassembly, ensure that one-way clutch No.1 assembly rotates only in one direction.
   If the one-way clutch rotates in both directions or it does not rotate in either direction, replace it with new one.

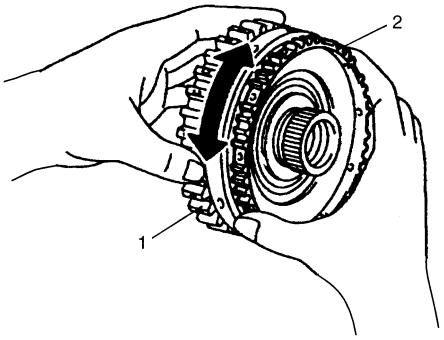

I2RH0B510254-01

Adjustment

Differential side bearing preload

1) After applying A/T fluid to differential assembly, fit it to transaxle case.
2) Install torque converter housing to transaxle case, then tighten bolts (1) to specified torque.

   Tightening torque
   Torque converter housing bolt (a): 33 N·m (3.3 kgf-m, 24.0 lb-ft)

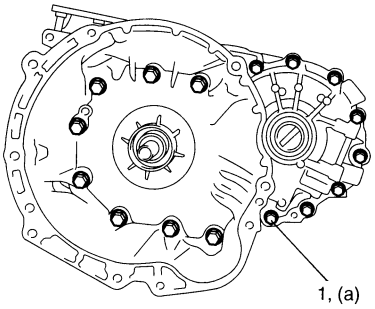

I2RH0B510255-01

3) Measure bearing preload (a) by using a special tool.

   Special tool
   (A): 09928–06050

   Differential side bearing preload (a) measured as starting torque
   In the case of new bearing: 0.78 – 1.37 N·m (7.9 – 13.9 kg-cm, 0.58 – 1.01 lb-ft)
   In the case of reused bearing: 0.39 – 0.69 N·m (3.9 – 6.9 kg-cm, 0.29 – 0.51 lb-ft)

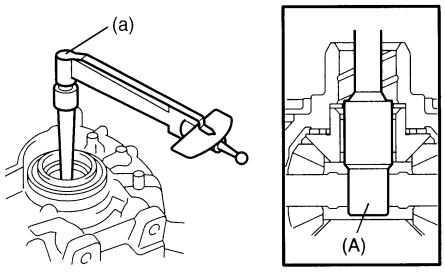

I2RH0B510256-01

4) If bearing preload is out of specification, select shim with suitable thickness from among the list below and replace it. Then adjust differential side bearing preload within specification.

   Available shim thickness

Thickness	Identification mark
1.80 mm (0.070 in.)	A
1.85 mm (0.072 in.)	B
1.90 mm (0.074 in.)	C
1.95 mm (0.076 in.)	D
2.00 mm (0.078 in.)	E
2.05 mm (0.080 in.)	F
2.08 mm (0.081 in.)	G
2.11 mm (0.083 in.)	H
2.14 mm (0.084 in.)	J
2.17 mm (0.085 in.)	K
2.20 mm (0.087 in.)	L
2.23 mm (0.088 in.)	M
2.26 mm (0.089 in.)	N
2.29 mm (0.090 in.)	P
2.32 mm (0.091 in.)	Q
2.35 mm (0.092 in.)	R
2.40 mm (0.094 in.)	S
2.45 mm (0.096 in.)	T
2.50 mm (0.098 in.)	U
2.55 mm (0.100 in.)	V
2.60 mm (0.102 in.)	W
2.65 mm (0.104 in.)	X
2.70 mm (0.106 in.)	Y

NOTE

Record measured differential side bearing, because it is necessary to adjust countershaft bearing preload.

5) Remove differential assembly.

Countershaft bearing preload

1) After applying A/T fluid to countershaft assembly (1) and differential assembly (2), fit them.
2) Install torque converter housing to transaxle case, then tighten bolts to specified torque.

   Tightening torque
   Torque converter housing bolt: 33 N·m (3.3 kgf-m, 24.0 lb-ft)

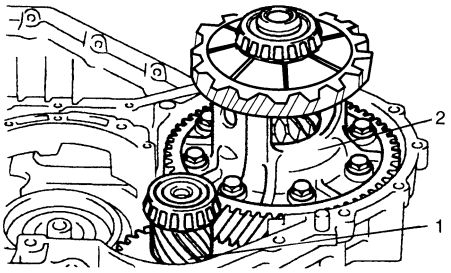

I2RH0B510257-01

3) Measure bearing preload (b) by using special tool.

   Special tool
   (A): 09928–06050

Countershaft bearing preload	=	(b) – Differential side bearing preload (a)

   Countershaft bearing preload (b) measured as starting torque
   In the case of new bearing: 0.33 – 0.76 N·m (3.3 – 7.6 kg-cm, 0.24 – 0.55 lb-ft)
   In the case of reused bearing: 0.17 – 0.38 N·m (1.7 – 3.8 kg-cm, 0.12 – 0.28 lb-ft)

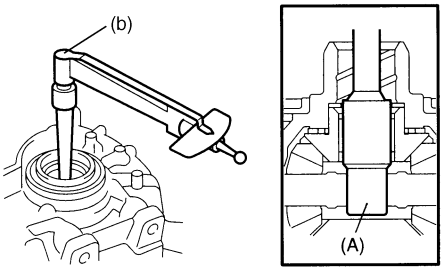

I3RM0B510067-01

4) If bearing preload is out of specification, select shim with suitable thickness from among the list below and replace it. Then adjust countershaft bearing preload within specification.

   Available shim thickness

Thickness	Identification mark
1.70 (0.066 in.)	1
1.75 (0.068 in.)	2
1.80 (0.070 in.)	3
1.85 (0.072 in.)	4
1.90 (0.074 in.)	5
1.93 (0.075 in.)	6
1.96 (0.077 in.)	7
1.99 (0.078 in.)	A
2.02 (0.079 in.)	B
2.05 (0.080 in.)	C
2.08 (0.081 in.)	D
2.11 (0.083 in.)	E
2.14 (0.084 in.)	F
2.17 (0.085 in.)	G
2.20 (0.086 in.)	H
2.25 (0.088 in.)	K
2.30 (0.090 in.)	L
2.35 (0.092 in.)	M
2.40 (0.094 in.)	N
2.45 (0.096 in.)	P
2.50 (0.098 in.)	Q
2.55 (0.100 in.)	R
2.60 (0.102 in.)	S
2.65 (0.104 in.)	U
2.70 (0.106 in.)	W

5) Remove differential assembly and countershaft assembly.

Automatic Transaxle Unit Assembly

S7RW0A5106060

⚠ CAUTION

- **Automatic transaxle consists of highly precise parts. As even flaw in small part may cause oil leakage or decrease in function, check each part carefully before installation.**
- **Clean all parts with compressed air. Never use wiping cloths or rags.**
- **Before assembling new clutch or brake discs, soak them in automatic transaxle fluid for at least 2 hours.**
- **Be sure to use new gaskets and O-rings.**
- **Lubricate O-rings with automatic transaxle fluid.**
- **Apply automatic transaxle fluid on sliding or rotating surfaces of the parts before assembly.**
- **Use Suzuki Super Grease "C" to retain parts in place.**
- **Be sure to install thrust bearings and races in correct direction and position.**
- **Make sure that snap ring ends are not aligned with one of cutouts and are installed in groove correctly.**
- **Do not use adhesive cements on gaskets and similar parts.**
- **Be sure to torque each bolt and nut to specification.**

1) Install new manual shift shaft oil seal to transaxle case.
   Use special tool and hammer to install it, and then apply grease to its lip.

   Special tool
   (A): 09925–98210

   "A": Grease 99000–25030 (SUZUKI Super Grease C)

   Manual shift shaft oil seal installing depth
   "a": 0.75 – 1.25 mm (0.03 – 0.05 in.)

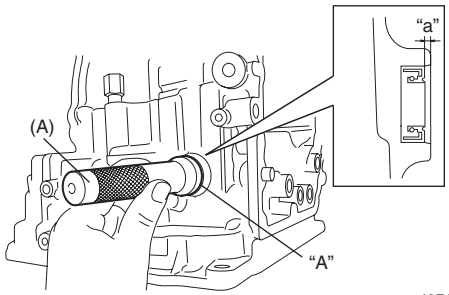

I2RH0B510258-01

2) Install manual detent spring (1) to transaxle case and tighten manual detent spring bolt to specified torque.

   Tightening torque
   Manual detent spring bolt (a): 10 N·m (1.0 kgf-m, 7.5 lb-ft)

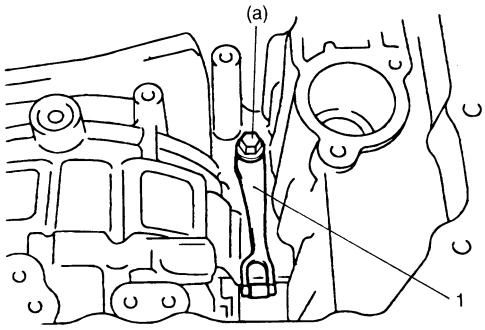

I2RH0B510259-01

3) Install parking lock pawl rod (2) to manual valve lever (1).

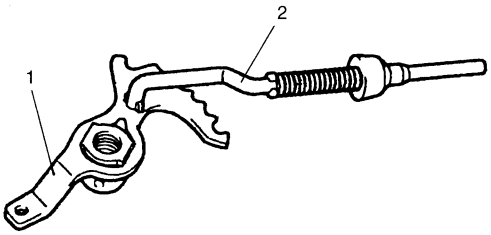

I2RH0B510260-01

4) After applying A/T fluid to new manual valve lever (1), install new manual shift shaft (4), new spacer (3) and manual valve lever to transaxle case.
5) After installing manual valve lever pin (2) by using spring pin remover with 3 mm (0.12 in.) in diameter (5) and hammer, turn spacer to set the position as shown in figure. Then caulk spacer with a punch.

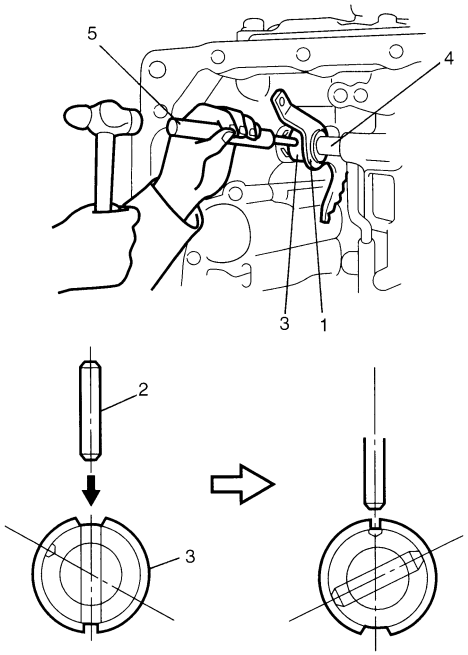

I2RH0B510261-01

6) Install parking lock pawl bracket (1) to transaxle case.

Tightening torque
Parking lock pawl bracket bolt (a): 7.5 N·m (0.75 kgf-m, 5.5 lb-ft)

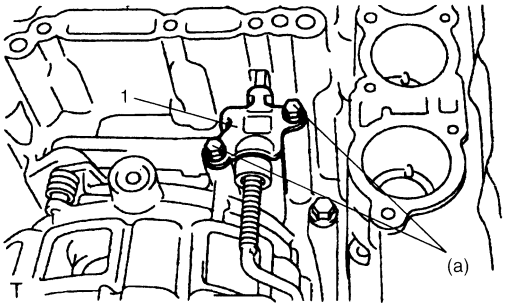

I2RH0B510262-01

7) After applying A/T fluid to new O-rings, install them to 1st and reverse brake piston (3).

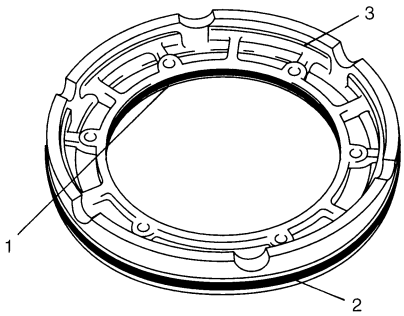

I2RH0B510263-01

1. Inner O-ring	2. Outer O-ring

8) Install 1st and reverse brake piston (1) to transaxle case (2).

NOTE

Be careful not to damage O-ring when installing 1st and reverse brake piston.

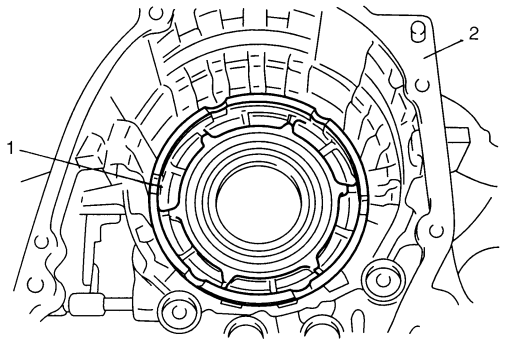

I2RH0B510264-01

9) Install 1st and reverse brake return spring subassembly (1) to transaxle case (2).

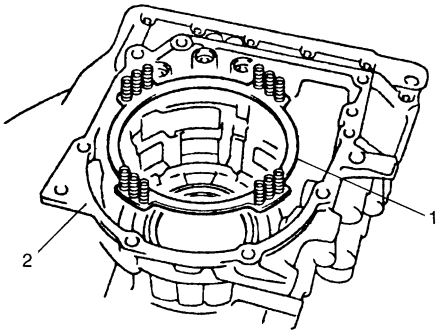

I2RH0B510265-01

10) Apply A/T fluid to 1st and reverse brake discs (3), separator plates (2) and retaining plate (1), then install them to transaxle case.

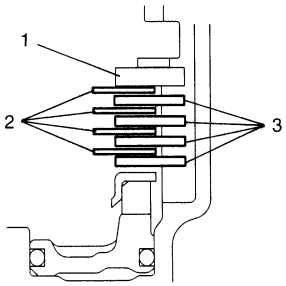

I2RH0B510266-01

11) Compress 1st and reverse brake return spring using special tool and hydraulic press, then attach snap ring.

⚠ CAUTION

Do not damage 1st and reverse brake return spring subassembly discs, plates and piston by pressing in 1st and reverse brake return spring subassembly passing through its original installing position over 0.8 mm (0.031 in.).

Special tool
(A): 09926–97620

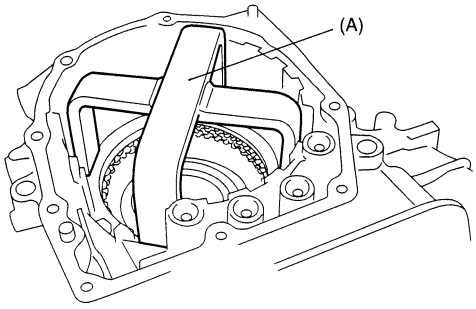

I2RH0B510267-01

12) Install 1st and reverse brake plate snap ring so that its both ends would be positioned in correct locations as shown in figure.

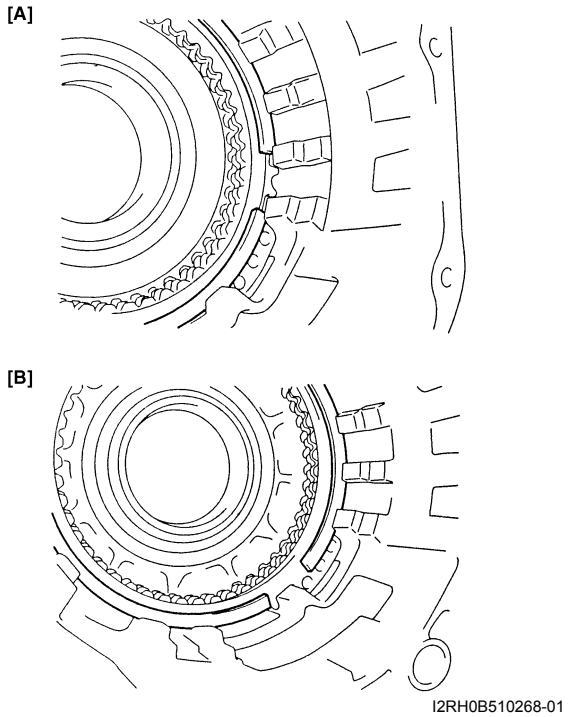

I2RH0B510268-01

[A]: Correct	[B]: Incorrect

13) Using special tools, measure 1st and reverse brake piston stroke when compressed air (400 – 800 kPa, 4 – 8 kg/cm^2, 57 – 113 psi) is brown through oil hole.

Special tool
(A): 09900–20607
(B): 09900–20701
(C): 09952–06020

1st and reverse brake piston stroke
Standard: 0.791 – 1.489 mm (0.0311 – 0.0586 in.)

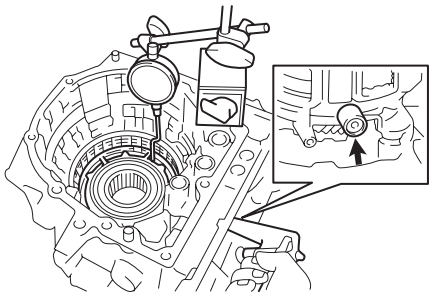

I2RH0B510269-01

14) Install reduction drive gear (1) to transaxle case (3) by using special tools and hydraulic press.

⚠ CAUTION

- **Do not use transaxle case as groundwork to press fit reduction drive gear.**
- **Do not give load more than 20 kN (2000 kg, 4410 lb) with hydraulic press. Otherwise, it may result in damaging reduction drive gear bearing.**

NOTE

When replacing reduction drive gear, replace it together with reduction driven gear as a set.

Special tool
(A): 09951–18210
(B): 09944–78210

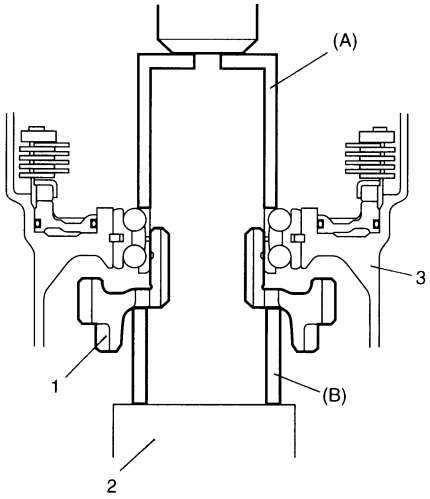

I2RH0B510270-01

2.	Stand that can slightly lift transaxle case.

15) Install parking lock pawl (1) and spring (2). Apply A/T fluid to parking lock pawl shaft, then insert it into transaxle case.

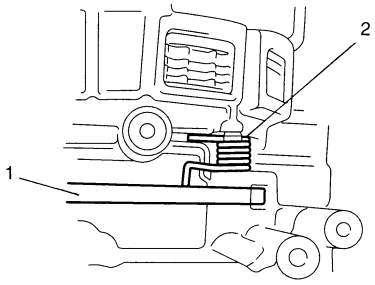

I2RH0B510271-01

16) Install new planetary ring gear subassembly (1) to reduction drive gear (3) by using special tools and hydraulic press.

⚠ CAUTION

- **Do not reuse planetary ring gear subassembly. Otherwise it may cause damage to planetary gear unit and/or reduction gears.**
- **Do not use transaxle case as groundwork to press fit planetary ring gear subassembly.**
- **Do not give load more than 20 kN (2000 kg, 4410 lb) with hydraulic press. Otherwise, it may result in damaging reduction drive gear bearing.**

Special tool
(A): 09951–18210
(B): 09944–78210

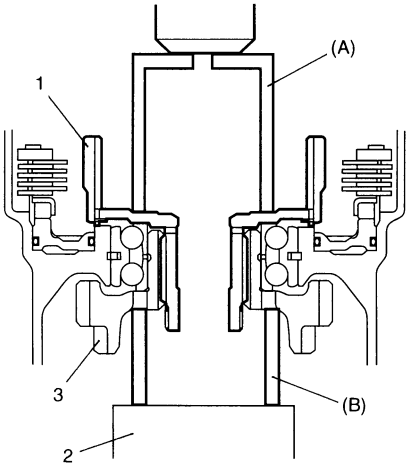

I2RH0B510272-01

2. Stand that can slightly lift transaxle case.

17) Using a small torque wrench, while turning to counter drive gear 100 rpm and measure the preload.

⚠ CAUTION

- **Do not tighten nut over the specifications so that reduction drive gear nut would not be broken.**
- **Carry out this procedure on rubber mat in order not to damage transaxle case.**

Reduction drive gear bearing preload measured as starting torque
Standard: 0.05 – 0.35 N·m (0.5 – 3.5 kg-cm, 0.036 – 0.253 lb-ft)

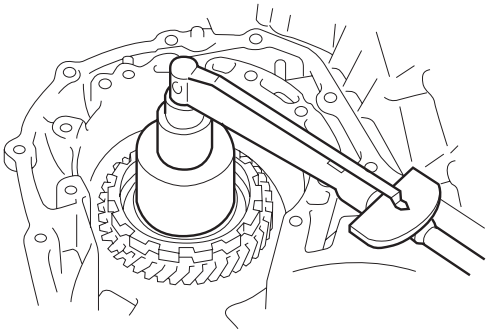

I2RH0B510273-01

18) Caulk reduction drive gear nut (1).

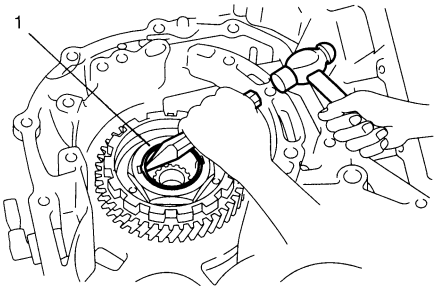

I2RH0B510274-01

19) Apply A/T fluid to planetary gear assembly (1), then fit it to planetary ring gear assembly.

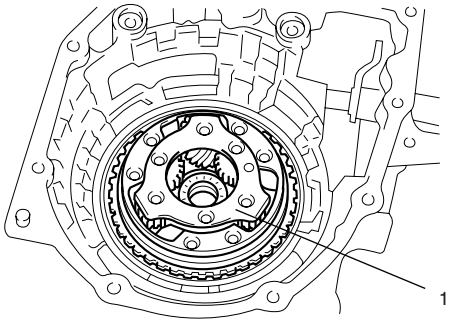

I2RH0B510275-01

20) Check for correct installation of planetary gear assembly as follows.
Measure the distance “a” by using micrometer caliper (1) and straightedge (2). If measured value is out of specification, remove planetary gear assembly and reinstall it properly.

Distance between planetary gear assembly and mating surface of transaxle case
“a”: More than 49.9 m (1.965 in.)

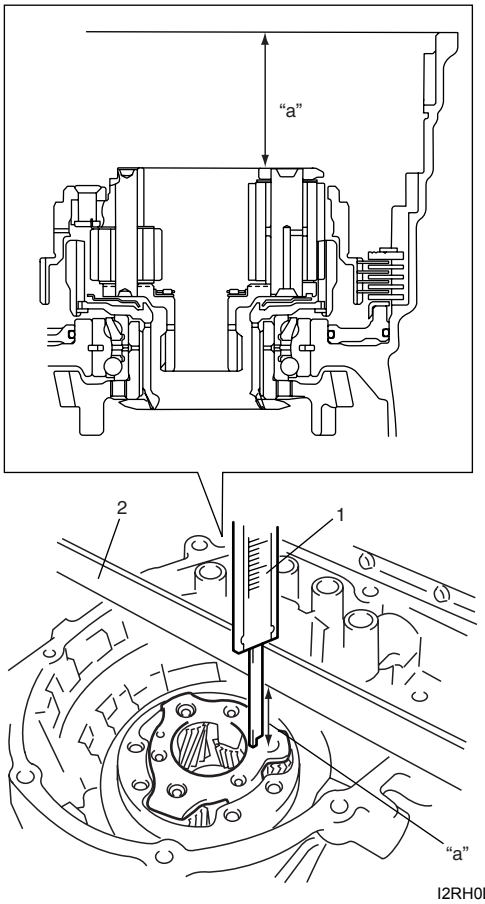

I2RH0B510276-01

21) Apply A/T fluid to one-way clutch No.2 assembly (1), then install it to planetary gear assembly. After that, ensure that planetary carrier rotates only in counterclockwise direction “A”, not in clockwise direction “B”.

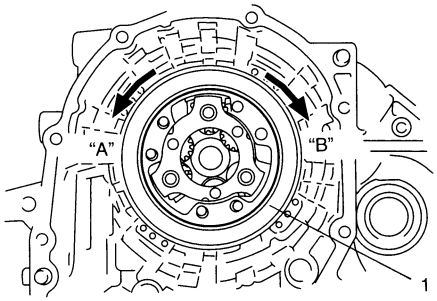

I2RH0B510277-01

22) Install one-way clutch outer race retainer (1).

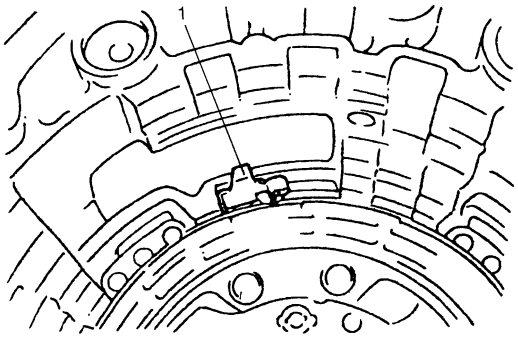

I2RH0B510278-01

23) Apply A/T fluid to new brake drum gasket (1), then install it to transaxle case.

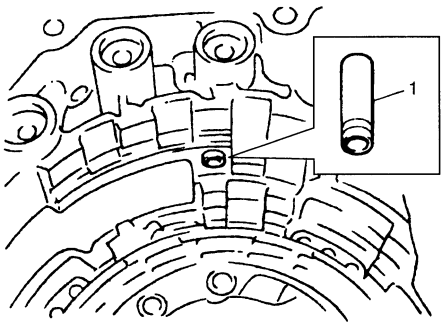

I2RH0B510279-01

24) Apply A/T fluid to 2nd brake retaining plate (1), discs (2) and separator plates (3), then install them to transaxle case.

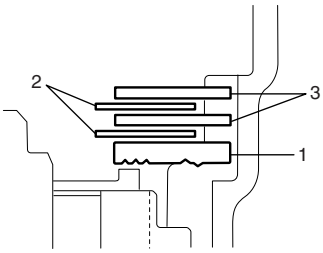

I2RH0B510280-01

25) Install 2nd brake return spring subassembly (1) to transaxle case.

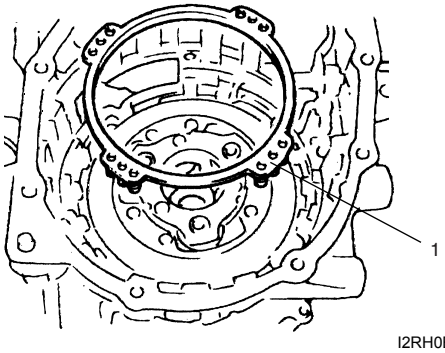

I2RH0B510281-01

26) Apply A/T fluid to 2nd brake piston assembly (1), and align the projection of 2nd brake piston assembly with the groove of transaxle case, then put together.

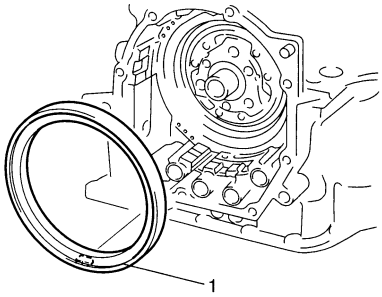

I2RH0B510282-01

27) Install 2nd brake piston snap ring (1) by using special tool and hydraulic press.

⚠ CAUTION

Do not damage 2nd brake piston assembly, return spring subassembly, plates and discs by pressing in 2nd brake assembly passing through its original installing position over 0.4 mm (0.016 in.).

Special tool
(A): 09926–96050

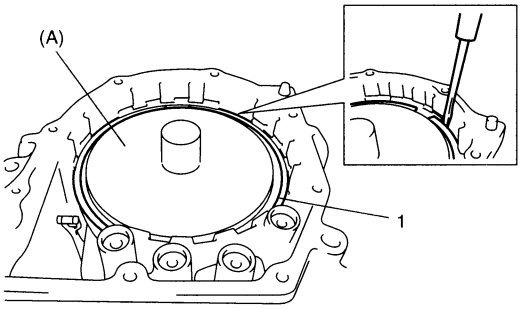

I2RH0B510283-01

28) Check 2nd brake piston stroke by measuring clearance between 2nd brake separator plate (1) and piston (2) with feeler gauge (3).
If clearance, that is, piston stroke is out of specification replace clutch discs and plates with new ones.

⚠ CAUTION

When brake disc, retaining plate and/or separator plate of 2nd brake have been replaced, all learned contents, which have been stored in TCM memory by executing learning control, should be initialized referring to "Learning Control Initialization". Neglecting this initialization may cause excessive shift shock.

<u>2nd brake piston stroke</u>
Standard: 0.40 – 1.25 mm (0.016 – 0.049 in.)

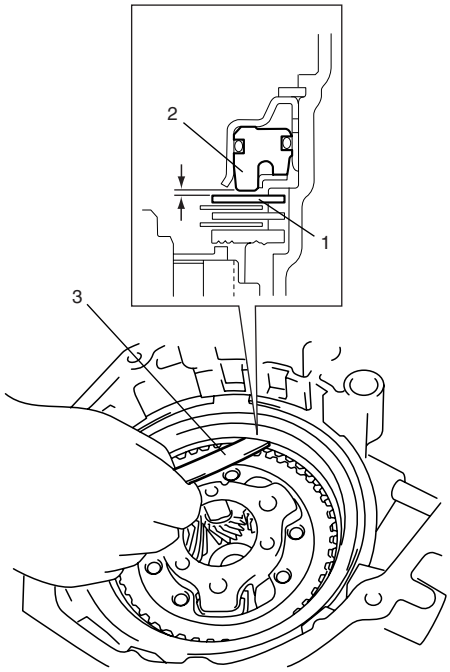

I2RH0B510284-01

29) After applying A/T fluid to front sun gear thrust bearing race (2), install it to front planetary sun gear (1).

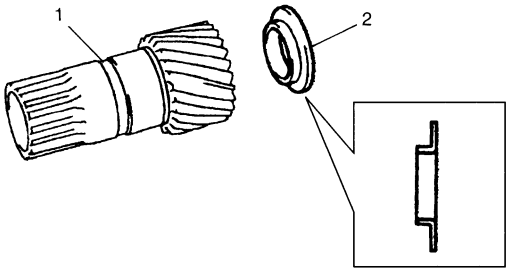

I2RH0B510285-01

30) Apply A/T fluid to front planetary sun gear (1) and install it to planetary gear assembly (2).

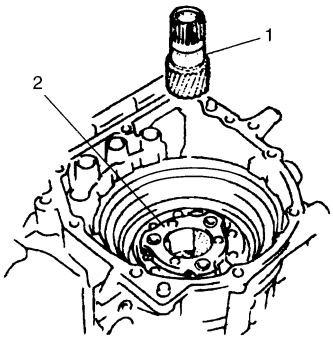

I2RH0B510286-01

31) Install O/D and 2nd coast brake retaining plate snap ring (1).

⚠ CAUTION

Be sure to install O/D and 2nd coast brake retaining plate snap ring correctly in groove of transaxle case.

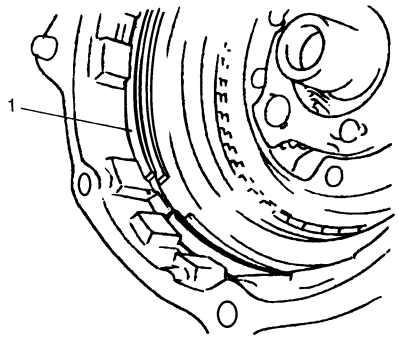

I2RH0B510287-01

32) After applying grease to slide contact face of planetary carrier thrust washer (1), install it to planetary gear assembly.

"A": Grease 99000–25030 (SUZUKI Super Grease C)

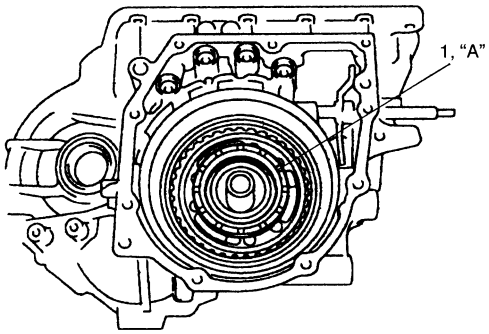

I2RH0B510288-01

33) Apply A/T fluid to one-way clutch No.1 assembly (3) and install one-way clutch No.1 assembly (3) to rear planetary sun gear subassembly (2).

34) Apply A/T fluid to planetary gear thrust bearing (1), then install it to one-way clutch No.1 assembly (3).

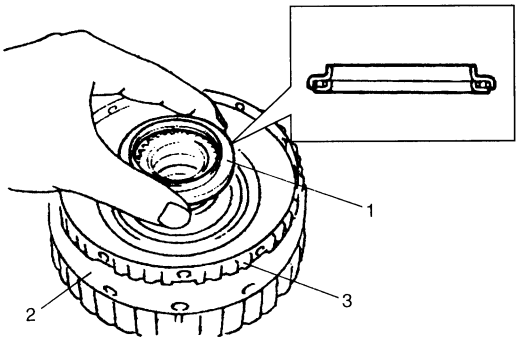

I2RH0B510289-01

35) After applying A/T fluid to rear planetary sun gear subassembly and one-way clutch No.1 assembly (1), install them in transaxle case (2).

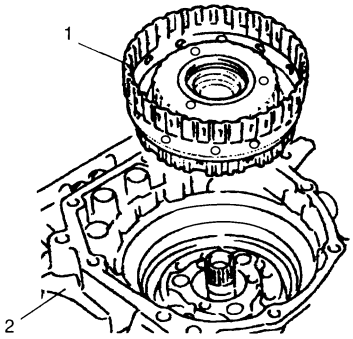

I2RH0B510290-01

36) After applying A/T fluid to rear sun gear thrust bearing race (1), install it to rear planetary sun gear (2).

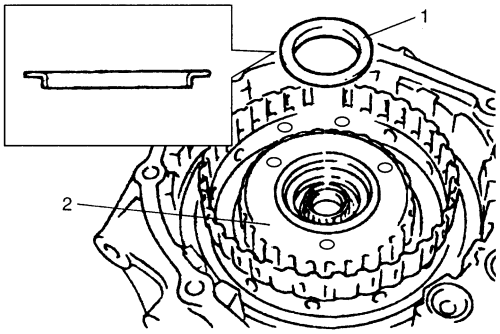

I2RH0B510291-01

37) After applying A/T fluid to rear sun gear thrust bearing (1), install it to forward clutch hub (2).

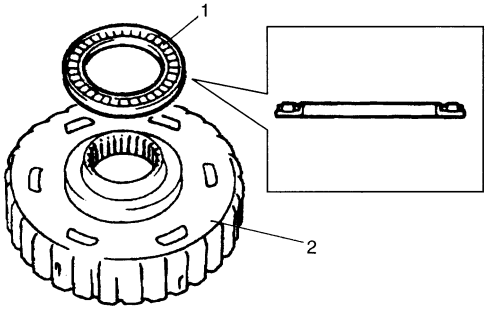

I2RH0B510292-01

38) After applying A/T fluid to forward clutch hub (1), install it in transaxle case (2).

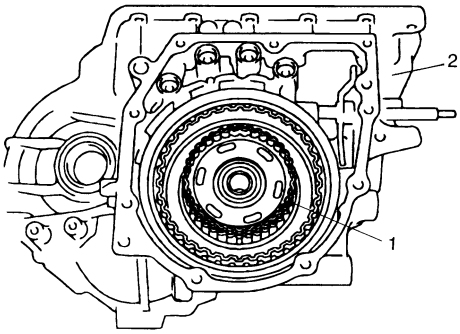

I2RH0B510293-01

39) After applying A/T fluid to intermediate shaft thrust bearing rear race (3), thrust bearing (2) and front race (1), install them to forward and reverse clutch assembly (4).

Bearing race dimension

	Front race	Rear race
Outside diameter	**30.6 mm (1.20 in.)**	**28.2 mm (1.11 in.)**
Thickness	**2.0 mm (0.08 in.)**	**2.0 mm (0.08 in.)**

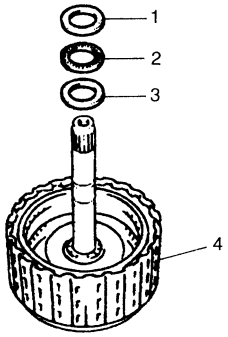

I2RH0B510294-01

40) Apply A/T fluid to forward and reverse clutch assembly (1).
Install forward and reverse clutch assembly while rotating clockwise and counterclockwise frequently to fit clutch discs to mating hubs.

NOTE

Before installation, align teeth of forward and reverse clutch discs to facilitate installation.

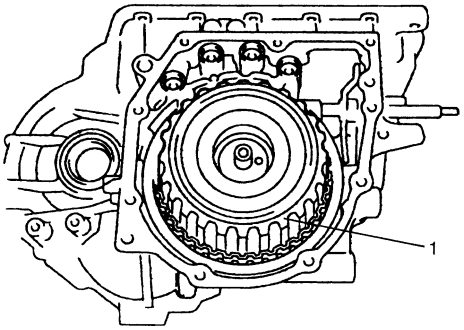

I2RH0B510295-01

41) Check for correct installation of forward and reverse clutch assembly as follows.
Measure distance “a” by using micrometer caliper (1) and straightedge (2). If out of specification, remove forward and reverse clutch assembly, forward clutch hub, rear planetary sun gear subassembly and one-way clutch No.1 assembly, and reinstall them properly.

Distance between forward and reverse clutch assembly and mating surface of transaxle case
“a”: 27.1 – 29.4 mm (1.067 – 1.157 in.)

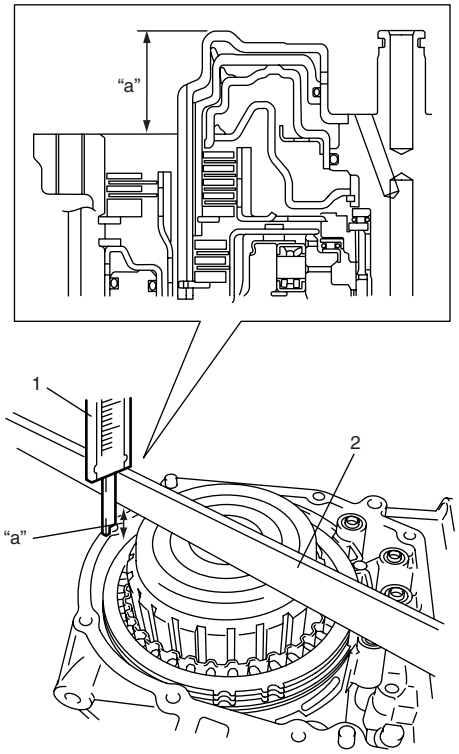

I2RH0B510296-01

42) After applying A/T fluid to O/D and 2nd coast brake retaining plate (4), separator plate (3), discs (2) and rear plate (1), install them to transaxle case (5).

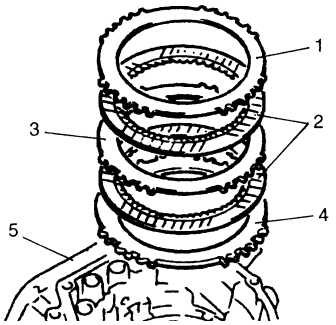

I2RH0B510297-01

43) Measure O/D and 2nd coast brake piston stroke.
- Measure dimension “a” from end face of transaxle case to O/D and 2nd coast brake rear plate (1) using straightedge and micrometer caliper.
- Measure dimension “b” from O/D and 2nd coast brake piston (2) to rear cover assembly mating surface using straightedge and micrometer caliper.
- Calculate piston stroke from measured value of dimensions “a” and “b”.
- Piston stroke = “a” – “b”

O/D and 2nd coast brake piston stroke
Standard: 0.65 – 1.05 mm (0.026 – 0.041 in.)

When piston stroke is out of specification, select O/D and 2nd coast brake rear plate with proper thickness from among the following table and replace it.

⚠ CAUTION

When brake disc, retaining plate, separator plate and/or rear plate of O/D and 2nd coast brake have been replaced, all learned contents, which have been stored in TCM memory by executing learning control, should be initialized referring to “Learning Control Initialization”.
Neglecting this initialization may cause excessive shift shock.

Available O/D and 2nd coast brake rear plate thickness

Thickness	Identification mark
1.8 mm (0.071 in.)	1
2.0 mm (0.079 in.)	2
2.2 mm (0.087 in.)	3
2.4 mm (0.094 in.)	4
2.6 mm (0.102 in.)	5

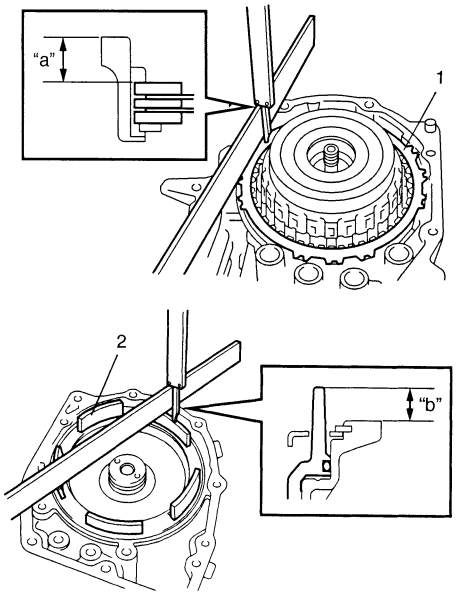

I2RH0B510298-01

44) After applying A/T fluid to new 2nd brake gaskets (1), install them to transaxle case (2).

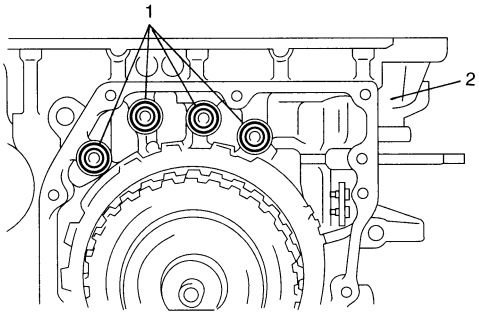

I2RH0B510299-01

45) After applying A/T fluid to reverse clutch drum thrust bearing (1), install it to forward and reverse clutch assembly (2).

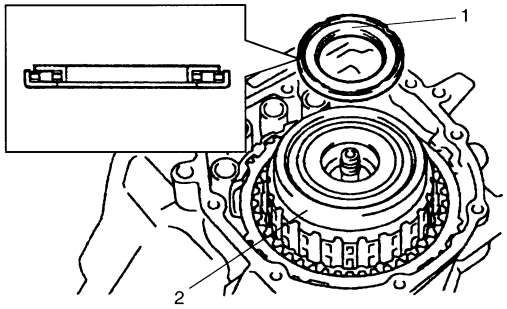

I2RH0B510300-01

46) Remove sealant attached to mating surface of transaxle rear cover (1) completely.

47) Apply sealant to mating surface of transaxle rear cover (1) by using a nozzle (2) as shown in figure by such amount that its section is 1.2 mm (0.047 in.) in diameter.

“A”: Sealant 99000–31230 (SUZUKI Bond No.1216B)

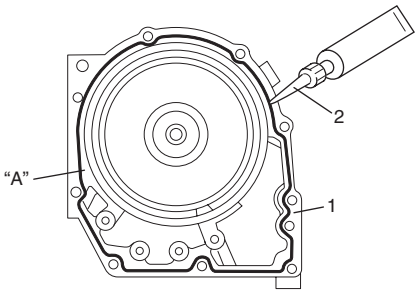

I2RH0B510301-01

48) Install transaxle rear cover assembly on transaxle case.

49) Install hook (2) to location shown in figure.

50) Tighten rear cover bolts (1).

Tightening torque
Rear cover bolt (a): 25 N·m (2.5 kgf-m, 18.0 lb-ft)

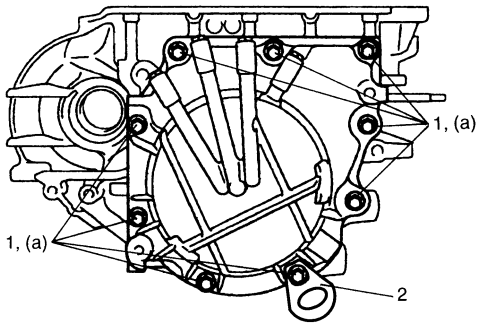

I3RM0B510068-01

51) Install fluid reservoir LH plate (1).

Tightening torque
Fluid reservoir LH plate bolt (a): 10 N·m (1.0 kgf-m, 7.5 lb-ft)

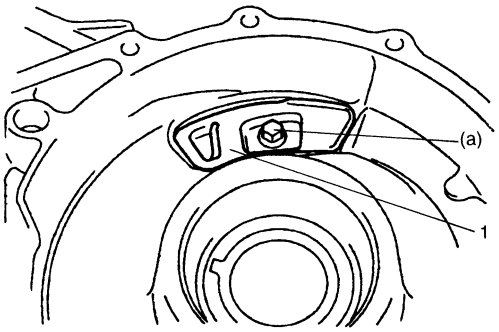

I2RH0B510303-01

52) After applying A/T fluid to new governor apply No.2 gasket (1), install it to transaxle case.

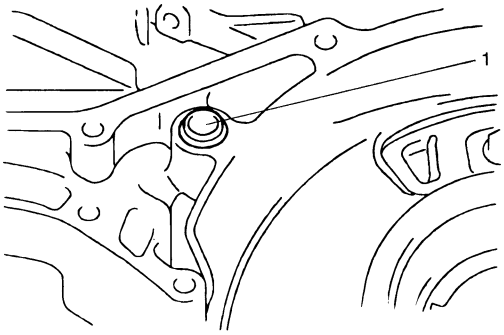

I2RH0B510304-01

53) After applying A/T fluid to differential assembly (1) and countershaft assembly (2), install them to transaxle case.

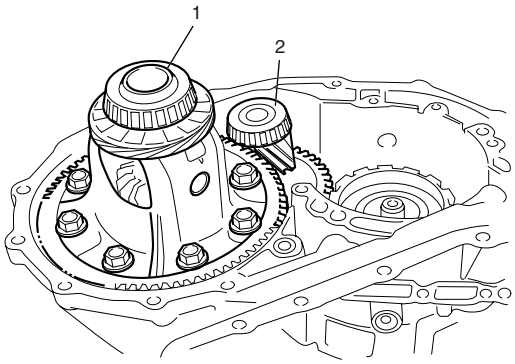

I4RS0A510036-01

54) After applying A/T fluid to direct clutch hub (1), install it to planetary gear assembly.

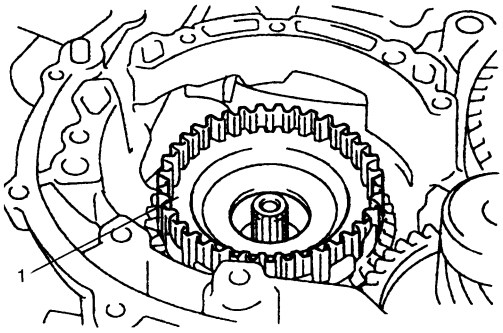

I2RH0B510306-01

55) After applying A/T fluid to input shaft rear thrust bearing (1) and thrust bearing race (2), install them into direct clutch hub (3).

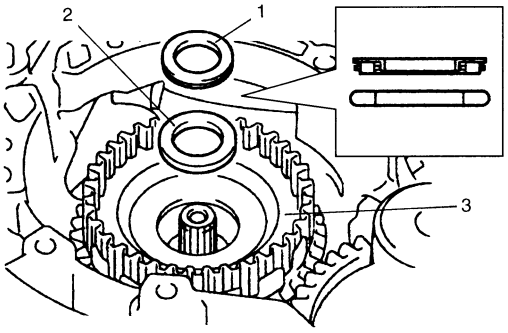

I2RH0B510307-01

56) After applying A/T fluid to input shaft front thrust bearing (1), install it to direct clutch assembly (2).

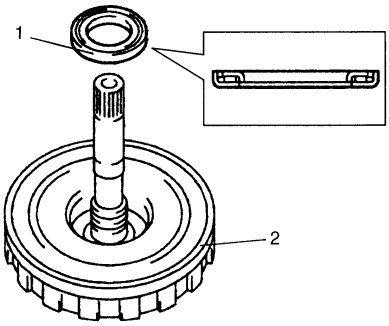

I2RH0B510308-01

57) Apply A/T fluid to direct clutch assembly (1). Install direct clutch assembly while rotating clockwise and counterclockwise frequently to fit clutch discs to mating hub.

NOTE

Before installation, align teeth of direct clutch discs to facilitate installation.

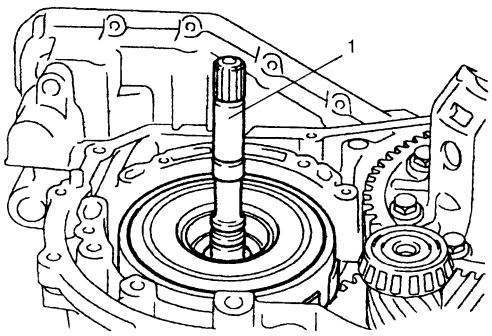

I2RH0B510309-01

58) Check for correct installation of direct clutch assembly as follows.
Measure distance “a” by using micrometer caliper (1) and straightedge (2). If out of specification, remove direct clutch assembly, direct clutch hub and reinstall them properly.

Distance between direct clutch assembly and mating surface of transaxle case
“a”: 10.5 – 11.3 mm (0.413 – 0.445 in.)

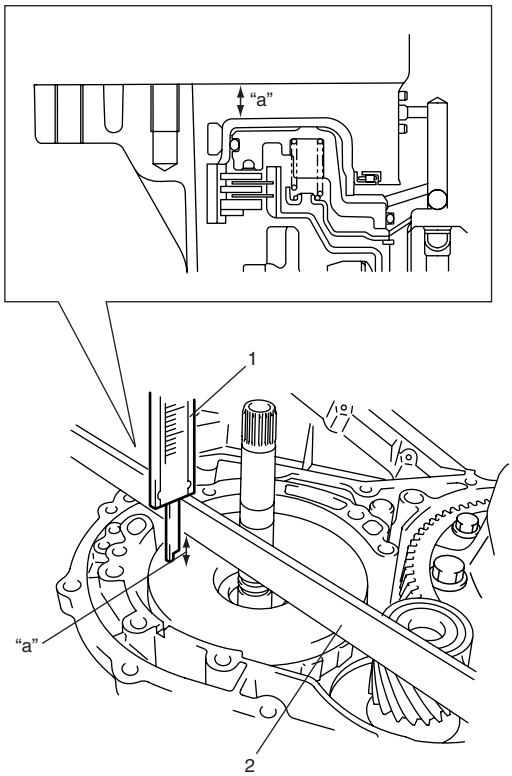

I2RH0B510310-01

59) Install oil pump assembly (1) to transaxle case.

Tightening torque
Oil pump assembly bolt (a): 25 N·m (2.5 kgf-m, 18.0 lb-ft)

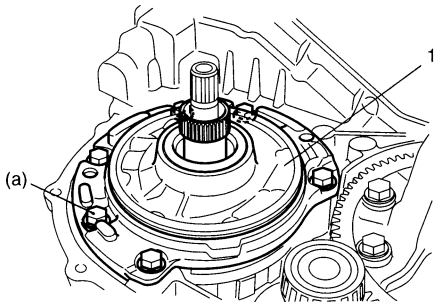

I2RH0B510311-01

60) Make sure that input shaft (1) turns smoothly.

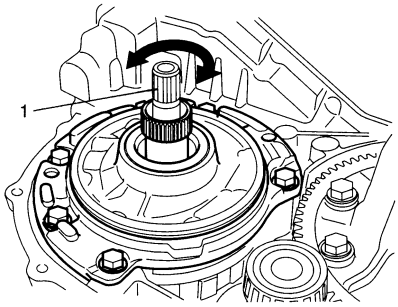

I2RH0B510312-01

61) Measure input shaft thrust play.
Apply dial gauge onto input shaft end (1) and measure thrust play of input shaft.

Special tool
(A): 09900–20607
(B): 09900–20701

Input shaft thrust play
0.3 – 0.9 mm (0.012 – 0.035 in.)

When input shaft thrust play is out of specification, select input shaft front thrust bearing with proper thickness from among the following table and replace it.

Available input shaft front thrust bearing thickness

Thickness	Outside diameter	Inside diameter
3.45 mm (0.14 in.)	48.5 mm (1.90 in.)	32.9 mm (1.30 in.)
4.05 mm (0.16 in.)	48.5 mm (1.90 in.)	32.5 mm (1.28 in.)

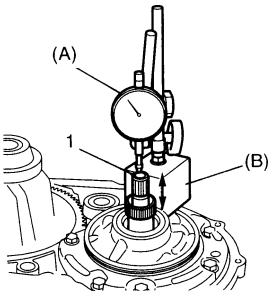

I2RH0B510313-01

62) After applying A/T fluid to new O-ring, fit it to breather union (2). Then install breather union to transaxle case.

63) Install breather hose (1).

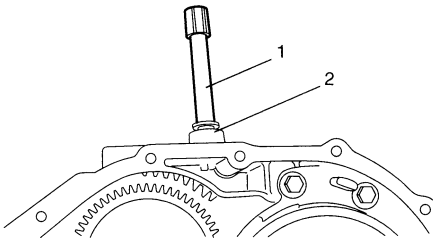

I2RH0B510314-01

64) Wipe off and clean mating surface between transaxle case (1) and torque converter housing.

65) Apply sealant to torque converter housing by using a nozzle (2) as shown in figure by such amount that its section is 1.2 mm (0.047 in.) in diameter.

"A": Sealant 99000–31230 (SUZUKI Bond No.1216B)

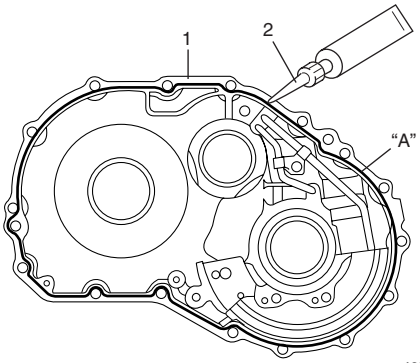

I2RH0B510315-01

66) Install torque converter housing to transaxle case, tighten bolts to specified torque.

⚠ CAUTION

Apply sealant to threads of four bolts shown in figure before tightening.

"A": Sealant 99000–31230 (SUZUKI Bond No.1216B)

Tightening torque
Torque converter housing bolt (a): 33 N·m (3.3 kgf-m, 24.0 lb-ft)

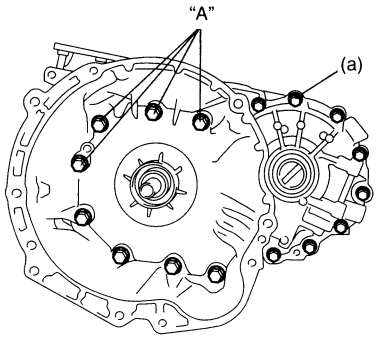

I3RM0B510069-01

67) After applying A/T fluid to new O-ring, fit it to transaxle case plug (1). Then install the transaxle case plug to transaxle case (2).

Tightening torque
Transaxle case plug (a): 7.5 N·m (0.75 kgf-m, 5.5 lb-ft)

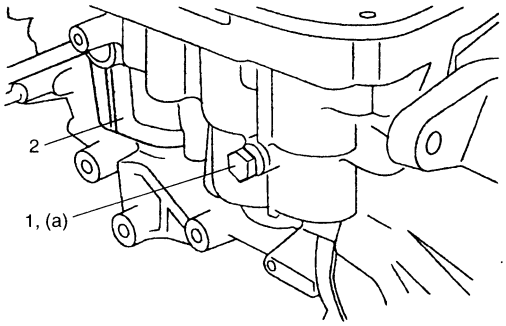

I2RH0B510317-01

68) Install new O-rings to each accumulator piston and apply A/T fluid to them.

Accumulator O-ring dimension

O-ring name	Inside diameter	Section diameter
Large B1 accumulator O-ring (2) Large C1 accumulator O-ring (2) Large C2 accumulator O-ring (2) – Above three O-rings are same.	**29.4 mm (1.16 in.)**	**2.6 mm (0.10 in.)**
Small B1 accumulator O-ring (4)	**19.7 mm (0.78 in.)**	**2.6 mm (0.10 in.)**
Small C1 accumulator O-ring (6) Small C2 accumulator O-ring (6) – Above two O-rings are same.	**21.8 mm (0.86 in.)**	**2.6 mm (0.10 in.)**

NOTE

Make sure that O-rings are not twisted or caught when installing.

69) Install B1, C1, C2 accumulator pistons and springs.

Accumulator piston identification

Piston name	Identification as embossed letters on piston
B1 accumulator piston (3)	**SB-1**
C1 accumulator piston (5)	**SC-1**
C2 accumulator piston (8)	**SC-2**

Accumulator spring identification

Spring name	Color of identification paint
B1 accumulator No.2 spring (1)	**Pink**
C1 accumulator No.2 spring (7)	**Blue**
C2 accumulator No.2 spring (9)	**Light green**

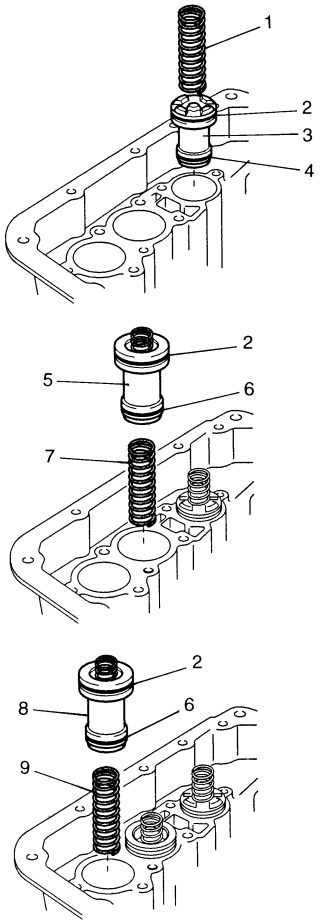

I2RH0B510318-01

70) After applying A/T fluid to cooler check valve (1) and spring (2), install them to transaxle case (3).

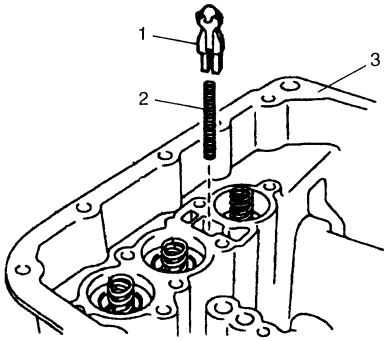

I2RH0B510319-01

71) After applying A/T fluid to new governor apply No.1 gasket (1), install it to transaxle case.

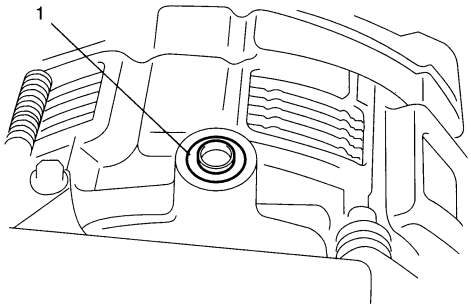

I2RH0B510320-01

72) After applying A/T fluid to new O-ring, fit it to valve body harness connector (3), then install valve body harness to transaxle case.

⚠ CAUTION

When put valve body harness (1) into transaxle case, take care not to damage transmission fluid temperature sensor (2) at narrow entrance of case.
Careless sensor treatment might cause sensor malfunction.

Tightening torque
Valve body harness connector bolt (a): 5.5 N·m (0.55 kgf-m, 4.0 lb-ft)

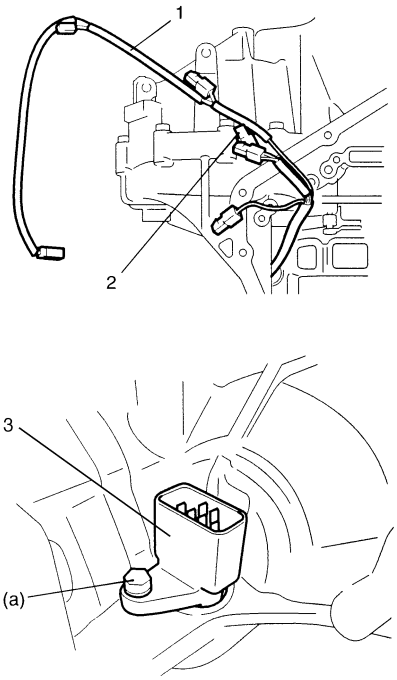

I2RH0B510321-01

73) Install manual valve rod (1) to manual valve lever (3) and then install valve body assembly (2) to transaxle case.

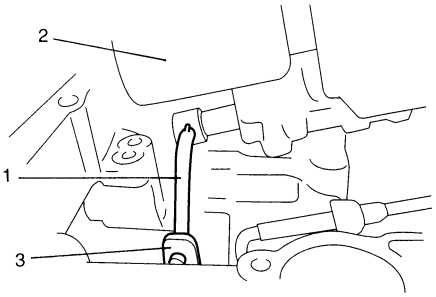

I2RH0B510322-01

74) Tighten valve body bolts to specified torque.

Tightening torque
Valve body bolt: 11 N·m (1.1 kgf-m, 8.0 lb-ft)

Valve body bolt length

Bolt	Length “a”	Pieces
A (1)	20 mm (0.79 in.)	6
B (2)	28 mm (1.10 in.)	5
C (3)	49 mm (1.93 in.)	1
D (4)	36 mm (1.42 in.)	1
E (5)	40 mm (1.58 in.)	1

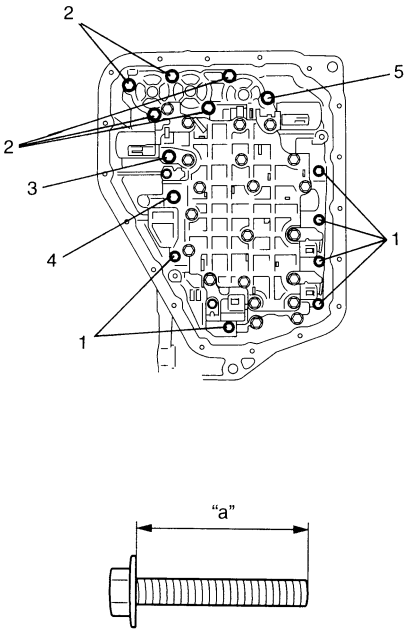

I2RH0B510323-01

75) Connect solenoid connectors to solenoid valves identifying their installing positions by wire colors, and install transmission fluid temperature sensor to its clamp.

Solenoid valve coupler specification

Solenoid valve coupler	Wire color
Shift solenoid valve-A (No.1) (1)	White
Shift solenoid valve-B (No.2) (2)	Black
Timing solenoid valve (3)	Yellow
TCC solenoid valve (4)	Light green / Brown
Pressure control solenoid valve (5)	Gray / Green
Transmission fluid temperature sensor (6)	Orange

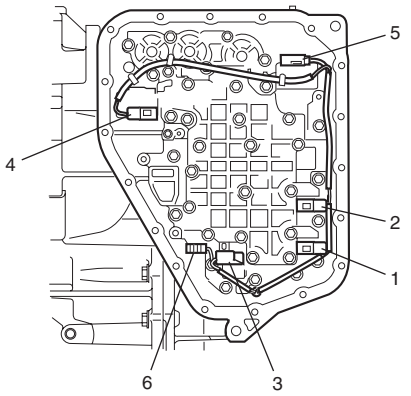

I5RW0C510067-02

76) Install oil strainer assembly (1).

Tightening torque
Oil strainer bolt (a): 10 N·m (1.0 kgf-m, 7.5 lb-ft)

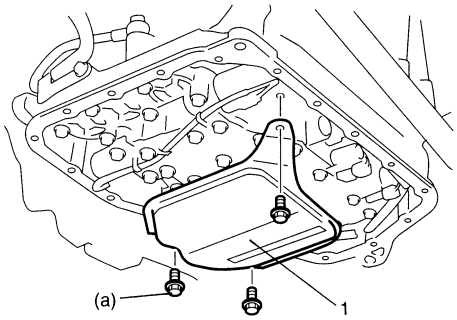

I2RH0B510325-01

77) Install oil cleaner magnets (1) in oil pan (2).

NOTE

If metal particles are attached to the magnets, clean them before installing.

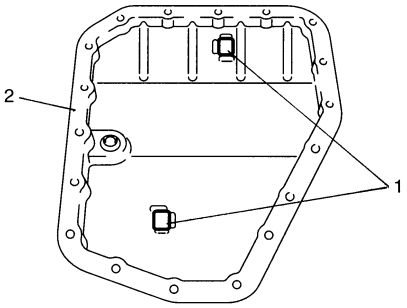

I2RH0B510326-01

78) Install new oil pan gasket (1) between transaxle case and oil pan (2).

79) Tighten oil pan bolts to specified torque diagonally and little by little.

Tightening torque
Oil pan bolt (a): 7.0 N·m (0.7 kgf-m, 5.0 lb-ft)

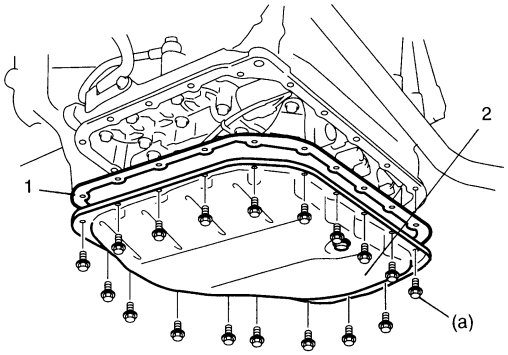

I2RH0B510327-01

80) After applying A/T fluid to new O-rings, fit it to fluid cooler pipe unions (1). Then install fluid cooler pipe unions to transaxle case.

Tightening torque
Fluid cooler pipe union (a): 25 N·m (2.5 kgf-m, 18.0 lb-ft)

81) Install new gaskets (2) and then install fluid cooler pipes.

Tightening torque
Fluid cooler pipe union bolt (b): 35 N·m (3.5 kgf-m, 25.5 lb-ft)
Fluid cooler pipe bracket bolt (c): 10 N·m (1.0 kgf-m, 7.5 lb-ft)

82) After applying A/T fluid to new O-ring, fit it to fluid filler tube. Then install fluid filler tube to transaxle case.

Tightening torque
Fluid filler tube bolt (d): 10 N·m (1.0 kgf-m, 7.5 lb-ft)

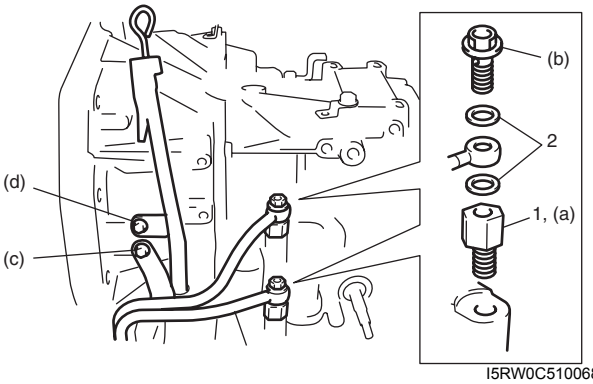

I5RW0C510068-01

83) Install select cable bracket (1).

Tightening torque
Select cable bracket bolt (a): 23 N·m (2.3 kgf-m, 17.0 lb-ft)

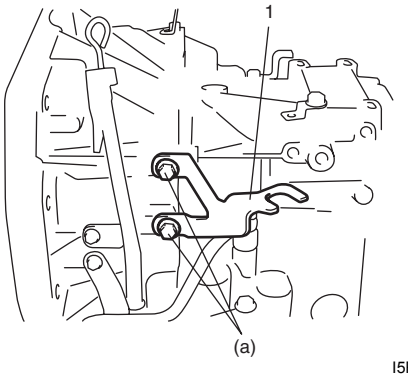

I5RW0C510069-02

84) Apply A/T fluid to O-rings of each sensor and install input shaft speed sensor (1) and output shaft speed sensor (VSS) (2).

Tightening torque
Input shaft speed sensor bolt (a): 5.5 N·m (0.55 kgf-m, 4.0 lb-ft)
Output shaft speed sensor (VSS) bolt (b): 13 N·m (1.3 kgf-m, 9.5 lb-ft)

85) Install harness bracket and select cable clamp (3).

Tightening torque
Select cable clamp bolt (c): 13 N·m (1.3 kgf-m, 9.5 lb-ft)

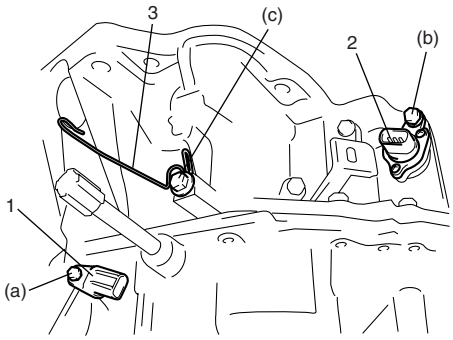

I2RH0B510330-01

86) Install transmission range sensor to transaxle case, tighten bolts temporarily at this step.

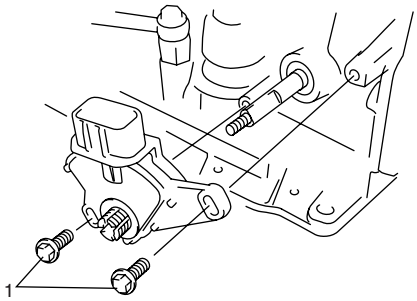

I2RH0B510331-01

87) Install lock washer (1) and tighten lock nut (2) to specified torque.

Tightening torque
Transmission range sensor lock nut (a): 7 N·m (0.7 kgf-m, 5.0 lb-ft)

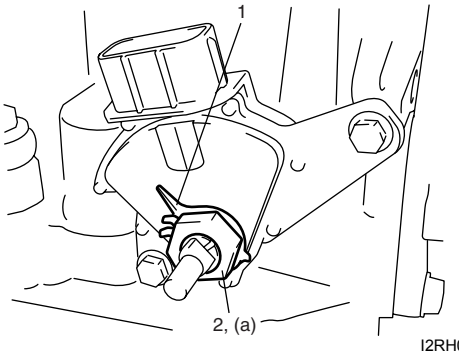

I2RH0B510332-01

88) Install manual select lever (1) temporarily at this step.

89) After shifting manual select lever counterclockwise fully, select “N” range position by bringing it back 2 notches clockwise.

90) Remove manual select lever (1) at this step.

91) Loosen sensor bolts (4) and align needle direction shaped on lock washer (2) with “N” reference line (3) on transmission range sensor by moving sensor in rotative direction.

92) Tighten sensor bolts to specified torque.

Tightening torque
Transmission range sensor bolt (b): 5.5 N·m (0.55 kgf-m, 4.0 lb-ft)

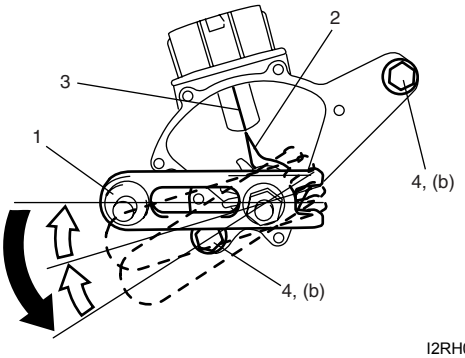

I2RH0B510333-01

93) Bend dents of lock washer (1) in order to prevent displacement of lock washer.

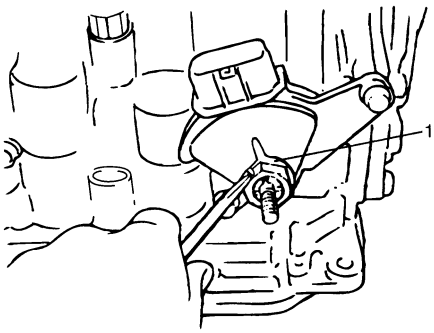

I2RH0B510334-01

94) Install manual select lever (1).

Tightening torque
Manual select lever nut (a): 13 N·m (1.3 kgf-m, 9.5 lb-ft)

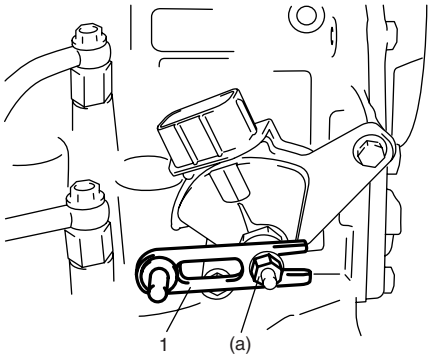

I2RH0B510335-01

95) Install engine mounting LH bracket (1). Tighten engine mounting LH bracket bolts and nut to specified torque referring to “Engine Mountings Components in Section 1D”.

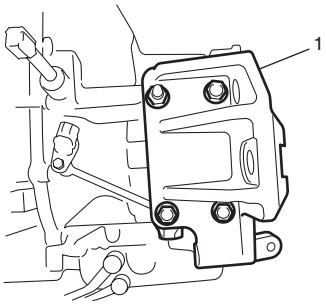

I5RW0C510058-01

96) Install torque converter (3) noting the following points.

⚠ CAUTION

- **Before installing converter, make sure that its pump hub portion is free from nicks, burrs or damage which may cause oil seal to leak.**
- **Be very careful not to drop converter on oil pump gear. Damage in gear, should it occur, may cause a critical trouble.**

- Install torque converter aligning grooves (1) of torque converter and projection (2) of oil pump drive gear.
- Install torque converter, using care not to damage oil seal of oil pump.
- After installing torque converter, check that distance “a” is within specification.

Torque converter installing position
“a”: More than 19.9 mm (0.783 in.)

- Check torque converter for smooth rotation.
- Apply grease around cup (6) at the center of torque converter.

“C”: Grease 99000–25011 (SUZUKI Super Grease A)

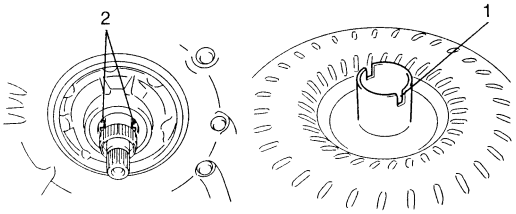

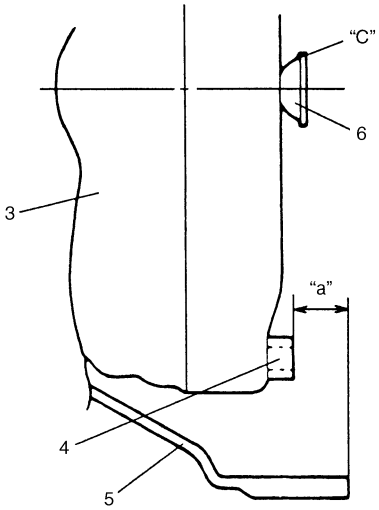

I2RH0B510337-01

4.	Flange nut
5.	Torque converter housing

Specifications

Tightening Torque Specifications

S7RW0A5107001

Fastening part	Tightening torque			Note
	N·m	kgf-m	lb-ft	
A/T fluid drain plug	17	1.7	12.5	☞ / ☞ / ☞
Transmission range sensor bolt	5.5	0.55	4.0	☞ / ☞
Output shaft speed sensor (VSS) bolt	13	1.3	9.5	☞ / ☞
Input shaft speed sensor bolt	5.5	0.55	4.0	☞ / ☞
Valve body harness connector bolt	5.5	0.55	4.0	☞ / ☞
Shift solenoid bolt	11	1.1	8.0	☞
Oil strainer bolt	10	1.0	7.5	☞ / ☞
Oil pan bolt	7.0	0.7	5.0	☞ / ☞
Engine oil pan bolt	55	5.5	40.0	☞
Transaxle and engine fastening bolt	85	8.5	61.5	☞
Transaxle and engine fastening nut	85	8.5	61.5	☞
Drive plate to torque converter bolt	19	1.9	14.0	☞
Transaxle housing lower plate bolt	11	1.1	8.0	☞
Oil pump subassembly bolt	10	1.0	7.5	☞
Rear cover plug	7.5	0.75	5.5	☞
Solenoid valve bolt	11	1.1	8.0	☞
Final gear bolt	78	7.8	56.5	☞
Torque converter housing plug	7.5	0.75	5.5	☞
Lubrication tube clamp bolt	5.5	0.55	4.0	☞
Fluid reservoir RH plate bolt	5.5	0.55	4.0	☞
Torque converter housing bolt	33	3.3	24.0	☞ / ☞ / ☞
Manual detent spring bolt	10	1.0	7.5	☞
Parking lock pawl bracket bolt	7.5	0.75	5.5	☞
Rear cover bolt	25	2.5	18.0	☞
Fluid reservoir LH plate bolt	10	1.0	7.5	☞
Oil pump assembly bolt	25	2.5	18.0	☞
Transaxle case plug	7.5	0.75	5.5	☞
Valve body bolt	11	1.1	8.0	☞
Fluid cooler pipe union	25	2.5	18.0	☞
Fluid cooler pipe union bolt	35	3.5	25.5	☞
Fluid cooler pipe bracket bolt	10	1.0	7.5	☞
Fluid filler tube bolt	10	1.0	7.5	☞
Select cable bracket bolt	23	2.3	17.0	☞
Select cable clamp bolt	13	1.3	9.5	☞
Transmission range sensor lock nut	7	0.7	5.0	☞
Manual select lever nut	13	1.3	9.5	☞

NOTE

The specified tightening torque is also described in the following.
“Select Cable Components”
“Automatic Transaxle Unit Components”
“Automatic Transaxle Assembly Components”
“Oil Pump Assembly Components”
“Transaxle Rear Cover (O/D and 2nd Coast Brake Piston) Assembly Components”
“Valve Body Assembly Components”
“Differential Assembly Components”

Reference:
For the tightening torque of fastener not specified in this section, refer to “Fasteners Information in Section 0A”.

Special Tools and Equipment

Recommended Service Material

S7RW0A5108001

Material	SUZUKI recommended product or Specification		Note
Grease	SUZUKI Super Grease A	P/No.: 99000–25011	☞ / ☞
	SUZUKI Super Grease C	P/No.: 99000–25030	☞ / ☞ / ☞ / ☞ / ☞ / ☞
Sealant	SUZUKI Bond No.1216B	P/No.: 99000–31230	☞ / ☞ / ☞

NOTE

Required service material is also described in the following.
“Select Cable Components”
“Automatic Transaxle Assembly Components”
“Oil Pump Assembly Components”
“Direct Clutch Assembly Components”
“Forward and Reverse Clutch Assembly Components”
“2nd Brake Piston Assembly Components”
“Transaxle Rear Cover (O/D and 2nd Coast Brake Piston) Assembly Components”
“Countershaft Assembly Components”
“Valve Body Assembly Components”
“Differential Assembly Components”

Special Tool

S7RW0A5108002

09900–20605 Dial calipers (1/100 mm, 10-34 mm) ☞ / ☞ / ☞ 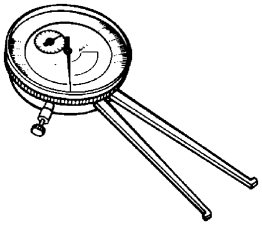	09900–20607 Dial gauge ☞ / ☞ / ☞ / ☞ / ☞ / ☞ / ☞ / ☞ / ☞ / ☞ / ☞ 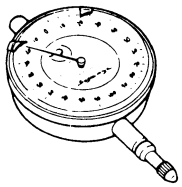
09900–20701 Magnetic stand ☞ / ☞ / ☞ / ☞ / ☞ / ☞ / ☞ / ☞ / ☞ / ☞ / ☞ 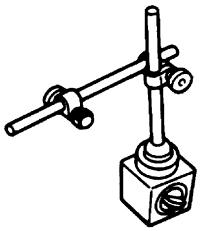	09913–50121 Oil seal remover ☞ / ☞ 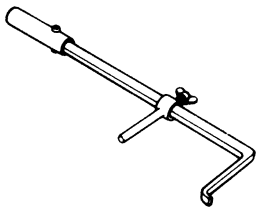
09913–61510 Bearing puller ☞ 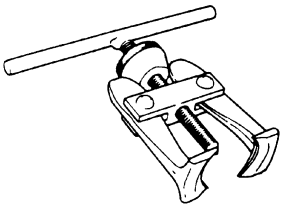	09913–70123 Bearing installing tool ☞ / ☞ 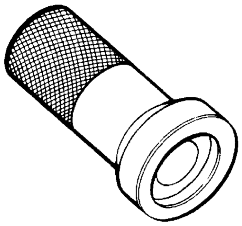
09913–75510 Bearing installer ☞ / ☞ 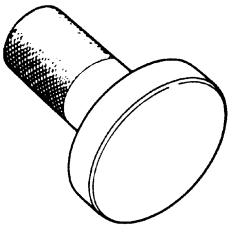	09913–75810 Bearing installer ☞ / ☞ 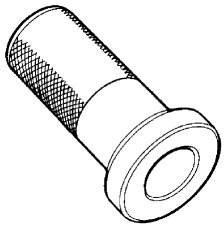

09913–84510 Bearing installer ☞ / ☞ / ☞ / ☞ 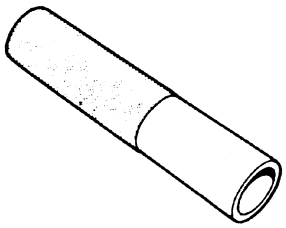	09913–85210 Bearing installer ☞ 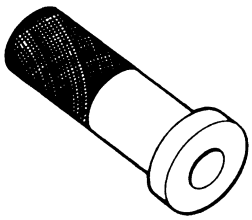
09923–78210 Bearing installer ☞ 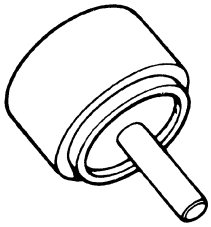	09924–74510 Bearing and oil seal handle ☞ / ☞ / ☞ / ☞ 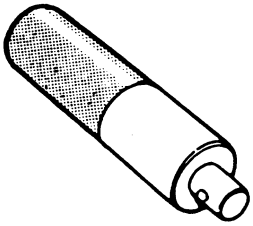
09925–37811–001 Oil pressure gauge ☞ 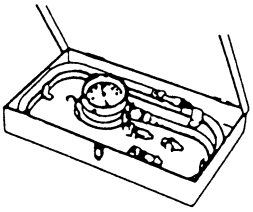	09925–88210 Bearing puller attachment ☞ / ☞ 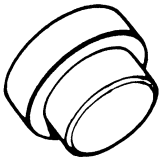
09925–98210 Input shaft bearing installer ☞ 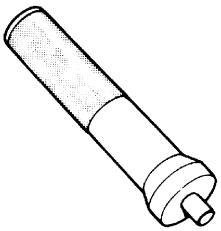	09925–98221 Bearing installer ☞ 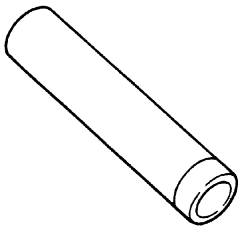
09926–37610 Bearing remover ☞ / ☞ 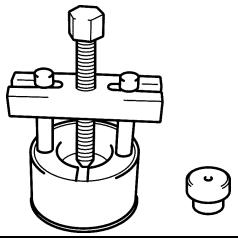	09926–37610–001 Bearing puller ☞ / ☞ 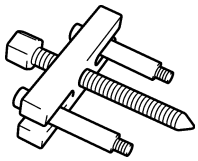
09926–37610–002 Bearing puller attachment ☞ / ☞ 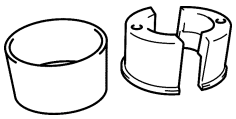	09926–37610–003 Bearing remover attachment ☞ / ☞ 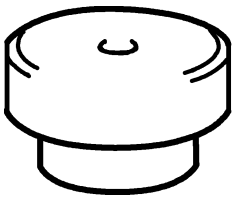
09926–58010 Bearing remover attachment ☞ 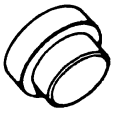	09926–96030 Clutch spring compressor No.7 ☞ / ☞ 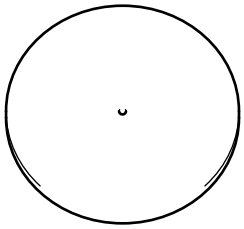
09926–96050 Brake piston compressor ☞ / ☞ 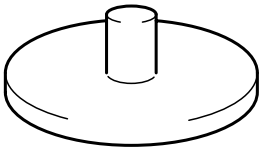	09926–97610 Spring compressor ☞ / ☞ 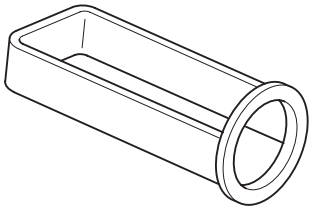

09926–97620 Spring compressor ☞ / ☞	09926–98310 Clutch spring compressor ☞ / ☞
09928–06050 Differential preload adapter ☞ / ☞	09942–15511 Sliding hammer ☞ / ☞ / ☞ / ☞
09944–78210 Bearing installer support ☞ / ☞	09944–88220 Oil seal installer ☞ / ☞ / ☞ / ☞
09944–96011 Bearing outer race remover ☞ / ☞ / ☞ / ☞	09946–06710 Transfer bearing dummy ☞ / ☞
09951–18210 Oil seal remover & installer No. 2 ☞ / ☞	09952–06020 Dial gauge plate No.2 ☞ / ☞ / ☞ / ☞
SUZUKI scan tool (SUZUKI-SDT) — This kit includes following items. 1. SUZUKI-SDT 2. DLC3 cable 3. USB cable 4. AC/DC power supply 5. Voltage meter probe 6. Storage case☞ / ☞	

Manual Transmission/Transaxle

General Description

Manual Transaxle Construction

S7RW0A5201001

The transaxle provides five forward speeds and one reverse speed by means of three synchromesh devices and three shafts-input shaft, countershaft and reverse gear shaft. All forward gears are in constant mesh, and reverse uses a sliding idler gear arrangement.
The low speed sleeve & hub is mounted on countershaft and engaged with countershaft 1st gear or 2nd gear, while the high speed sleeve & hub is done on input shaft and engaged with input shaft 3rd gear or 4th gear. The 5th speed sleeve & hub on input shaft is engaged with input shaft 5th gear mounted on the input shaft.
To prevent the cracking noise from the reverse gear when shifting transaxle gear into the reverse gear, the reverse shift braking device is used.
The device utilizes the 5th synchromesh, which is the lever synchro type, to apply the brake on the input shaft rotation.
The double cone synchronizing mechanism is provided to 2nd gear synchromesh device for high performance of shifting to 2nd gear.
For servicing, it is necessary to use genuine sealant or its equivalent on mating surfaces of transaxle case which is made of aluminum. The case fastening bolts must be tightened to specified torque by means of torque wrench. It is also important that all parts are thoroughly cleaned with cleaning fluid and air dried before reassembling.
Further, care must be taken to adjust preload of countershaft taper roller bearings. New synchronizer rings are prohibited from being lapped with respective gear cones by using lapping compound before they are assembled.

2WD

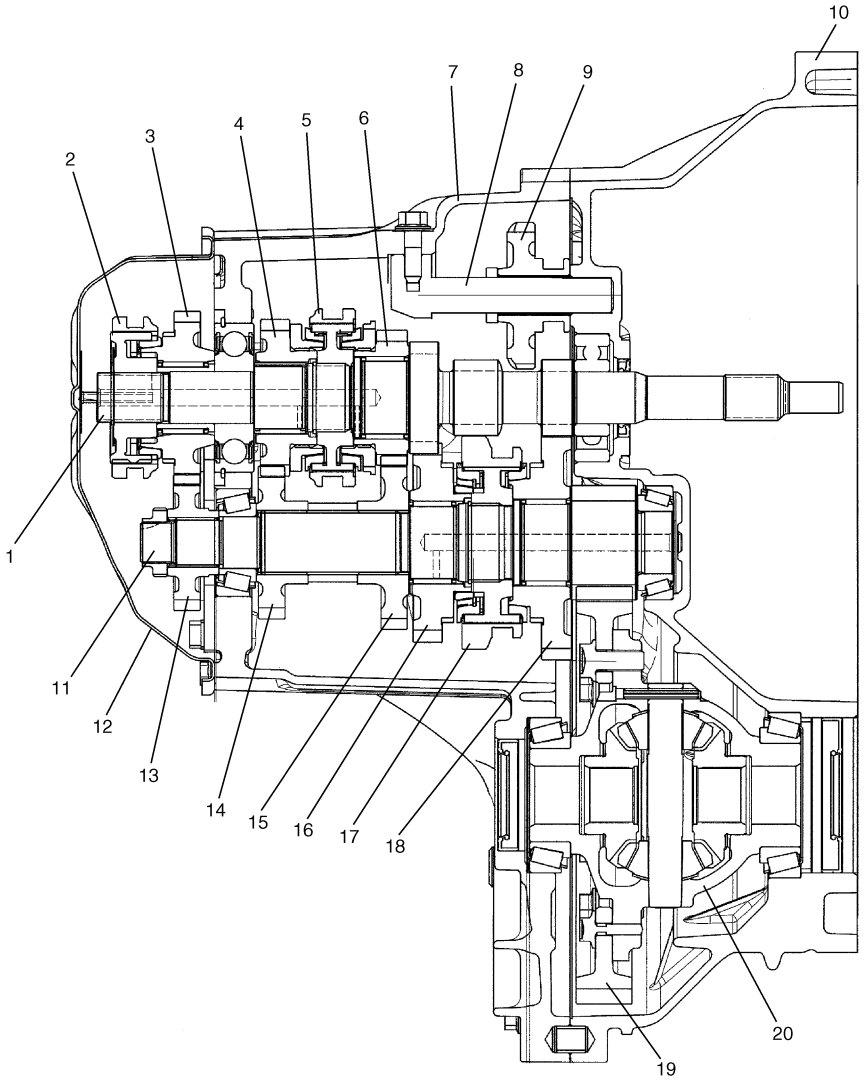

I5RW0A520001-01

1. Input shaft	6. Input shaft 3rd gear	11. Countershaft	16. Countershaft 2nd gear

2. 5th speed sleeve & hub	7. Left case	12. Side cover	17. Low speed sleeve & hub
3. Input shaft 5th gear	8. Reverse gear shaft	13. Countershaft 5th gear	18. Countershaft 1st gear
4. Input shaft 4th gear	9. Reverse idler gear	14. Countershaft 4th gear	19. Final gear
5. High speed sleeve & hub	10. Right case	15. Countershaft 3rd gear	20. Differential case

4WD

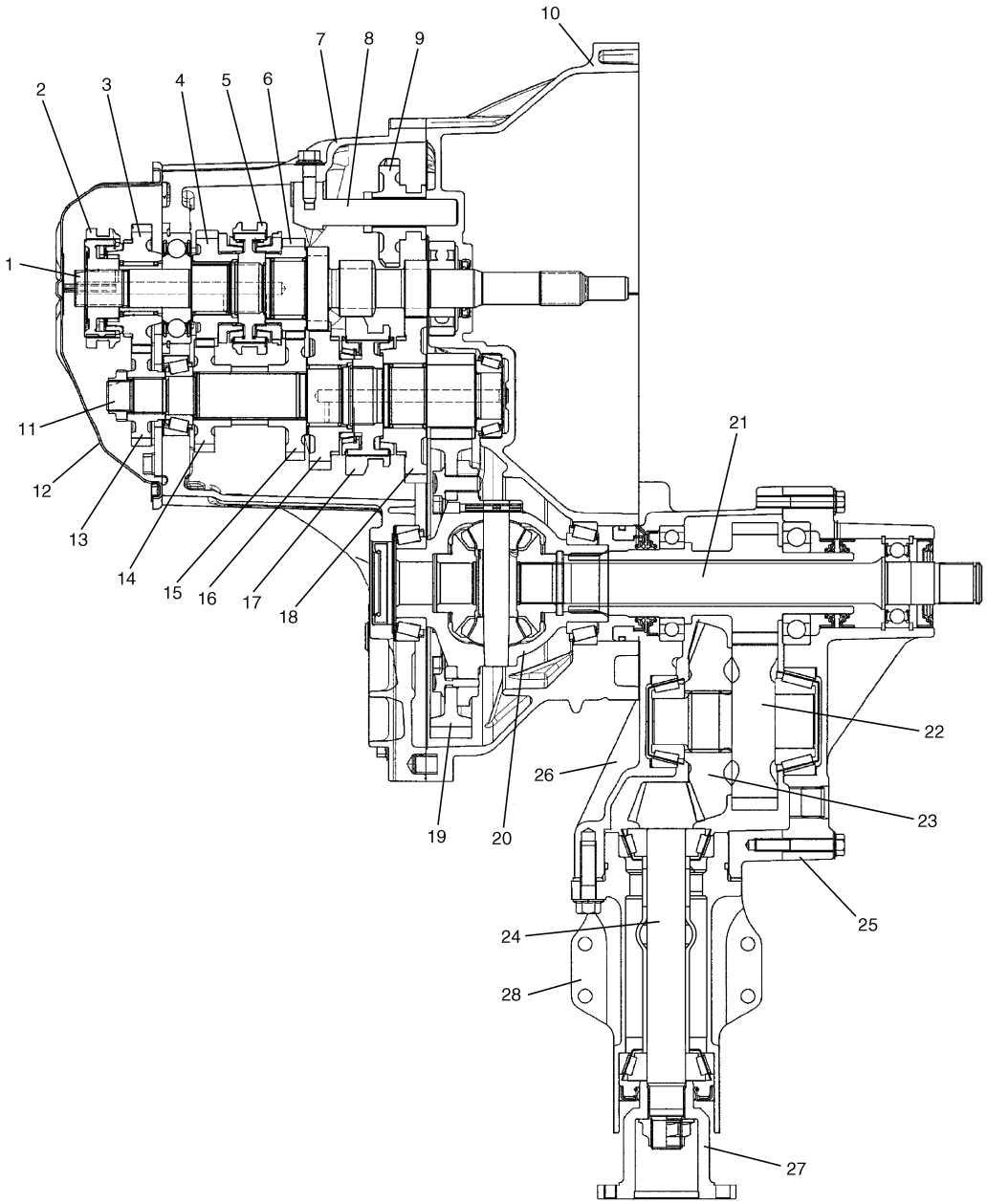

I5RW0A520002-05

1. Input shaft	8. Reverse gear shaft	15. Countershaft 3rd gear	22. Transfer driven gear
2. 5th speed sleeve & hub	9. Reverse idler gear	16. Countershaft 2nd gear	23. Transfer bevel gear
3. Input shaft 5th gear	10. Right case	17. Low speed sleeve & hub	24. Transfer bevel pinion
4. Input shaft 4th gear	11. Countershaft	18. Countershaft 1st gear	25. Transfer right case
5. High speed sleeve & hub	12. Side cover	19. Final gear	26. Transfer left case
6. Input shaft 3rd gear	13. Countershaft 5th gear	20. Differential case	27. Transfer output flange
7. Left case	14. Countershaft 4th gear	21. Transfer intermediate shaft	28. Transfer output retainer

Gear Shift Mechanism

The gear shifting control system consists of the following main parts. Movement of gear shift control lever is transmitted to gear shift & select shaft through gear shift and gear select cables.

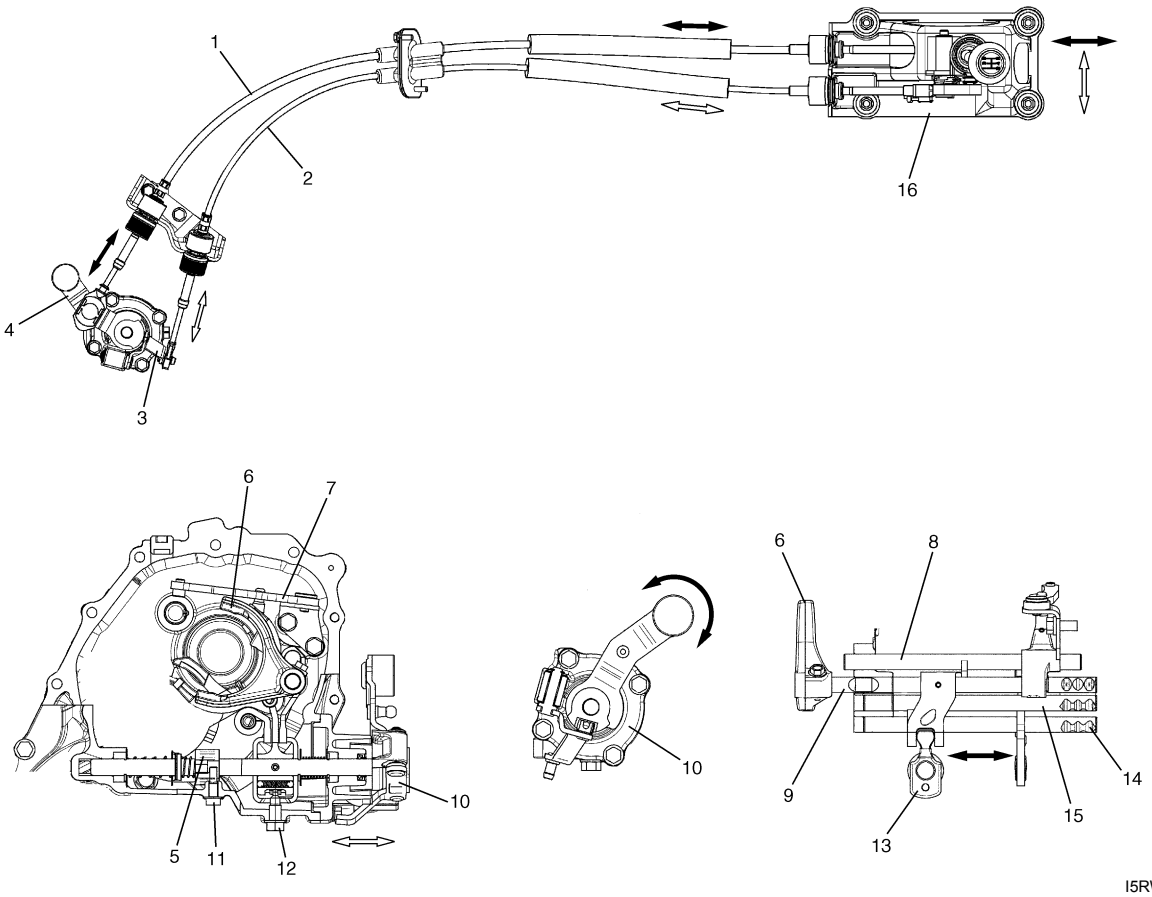

I5RW0A520003-02

1. Gear shift control cable	7. Reverse gear shift lever	13. Gear shift & select lever
2. Gear select control cable	8. 5th & reverse gear shift guide shaft	14. Low speed gear shift shaft
3. Select cable lever	9. 5th & reverse gear shift shaft	15. High speed gear shift shaft
4. Shift cable lever	10. Gear shift & select shaft assembly	16. Gear shift control lever assembly
5. 5th & reverse gear shift cam	11. 5th to reverse interlock guide bolt	
6. 5th gear shift fork	12. Gear shift interlock bolt	

5th & Reverse Gear Shift Cam

5th & reverse gear shift cam, cam guide return spring and 5th to reverse interlock guide bolt are provided to prevent the gear from being directly shifted from 5th to reverse.

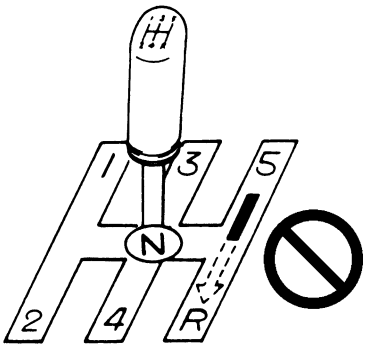

I2RH01520003-02

1) When shift lever is at neutral position between 3rd and 4th gear, shift cam (2) is under guide bolt and can turn freely clockwise (to 3rd gear) and counterclockwise (to 4th gear).

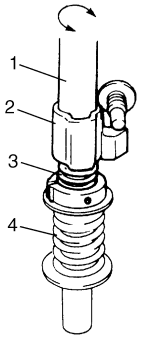

I2RH01520004-01

1.	Shift & select shaft
3.	Return spring (expanded)
4.	Reverse select spring (expanded)

2) When shift lever is shifted toward the right from neutral position, shift and select shaft (1) moves up but shift cam (2) is restricted by guide bolt and return spring is contracted.

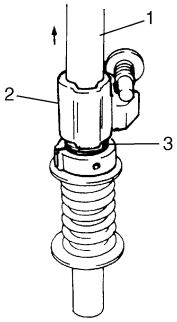

I2RH01520005-01

3.	Reverse select spring (contracted)

3) When shift lever is shifted to 5th gear, shift & select shaft (1) turns clockwise letting shift cam (2) off from guide bolt and pushed up by return spring. In this state, movement of shift cam is restricted by guide bolt and therefore, gearshift to reverse is not attainable.

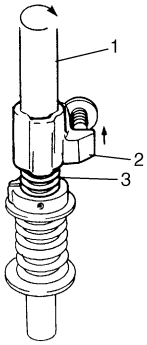

I2RH01520006-01

3.	Reverse select spring (expanded)

4) When shift lever is shifted from neutral position between 5th gear and reverse gear to reverse gear, shift cam (2) turns counterclockwise to attain reverse gear.

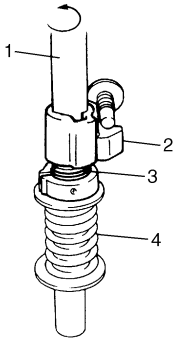

I2RH01520007-01

1.	Shift & select shaft
3.	Return spring (contracted)
4.	Reverse select spring (contracted)

Diagnostic Information and Procedures

Manual Transaxle Symptom Diagnosis

S7RW0A5204001

Condition	Possible cause	Correction / Reference Item
Gears slipping out of mesh	Worn shift fork shaft	*Replace*
	Worn shift fork or synchronizer sleeve	*Replace*
	Weak or damaged locating springs	*Replace*
	Worn bearings on input shaft or countershaft	*Replace*
	Worn chamfered tooth on sleeve and gear	*Replace sleeve and gear*
Hard shifting	Inadequate lubricant	*Replenish*
	Improper clutch pedal free travel	*Replace clutch arm or master cylinder*
	Distorted or broken clutch disc	*Replace*
	Damaged clutch pressure plate	*Replace clutch cover*
	Worn synchronizer ring	*Replace*
	Worn chamfered tooth on sleeve or gear	*Replace sleeve or gear*
	Worn gear shift control shaft joint bush	*Replace*
	Distorted shift shaft	*Replace*
	Broken gear shift / select control cables	*Replace*
Noise	Inadequate or insufficient lubricant	*Replenish*
	Damaged or worn bearing(s)	*Replace*
	Damaged or worn gear(s)	*Replace*
	Damaged or worn synchronizer parts	*Replace*

Repair Instructions

Manual Transaxle Oil Level Check

S7RW0A5206001

1) Lift up vehicle and check oil leakage. Repair leaky point, if any.
2) Remove oil level / filler plug (1) and check oil contamination and oil level is lower end of oil level / filler plug hole (2).
   If oil is excessive dirty or insufficient, replace oil or pour specified oil up to plug hole.
3) Apply sealant to thread of level / filler plug, and then tighten it to specified torque.

   “A”: Sealant 99000–31260 (SUZUKI Bond No.1217G)

   Tightening torque
   Transaxle oil level / filler plug (a): 21 N·m (2.1 kgf-m, 15.5 lb-ft)

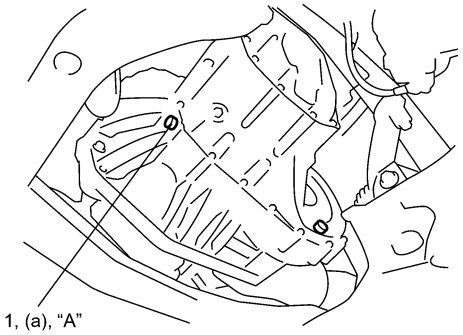

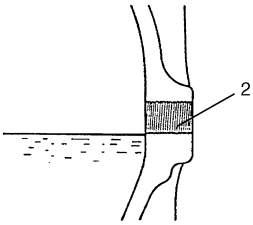

I5RW0A520004-01

Manual Transaxle Oil Change

S7RW0A5206002

1) Before changing or inspecting oil, be sure to stop engine and lift vehicle horizontally.
2) With vehicle lifted up, check leakage.
   If leakage exists, correct it.

NOTE

Whenever vehicle is hoisted for any other service work than oil change, also be sure to check for oil leakage.

3) Remove oil level / filler plug (2).
4) Remove drain plug (1), and drain old oil.
5) Apply sealant to thread of drain plug (1), and tighten it to specified torque.

   "A": Sealant 99000–31260 (SUZUKI Bond No.1217G)

   Tightening torque
   Transaxle oil drain plug (a): 21 N·m (2.1 kgf-m, 15.5 lb-ft)

6) Pour new specified oil until oil level reaches bottom of oil filler plug hole (3) as shown in figure.

NOTE

It is highly recommended to use API GL-4 75W-90 gear oil.

Transaxle oil specification
: API GL-4 (For SAE classification, refer to viscosity chart [A] in figure.)

Manual transaxle oil capacity
Reference: 2.5 liters (5.3/4.4 US/Imp. pt.)

7) Apply sealant to thread of level / filler plug, and then tighten it to specified torque.

   "A": Sealant 99000–31260 (SUZUKI Bond No.1217G)

   Tightening torque
   Transaxle oil level / filler plug (b): 21 N·m (2.1 kgf-m, 15.5 lb-ft)

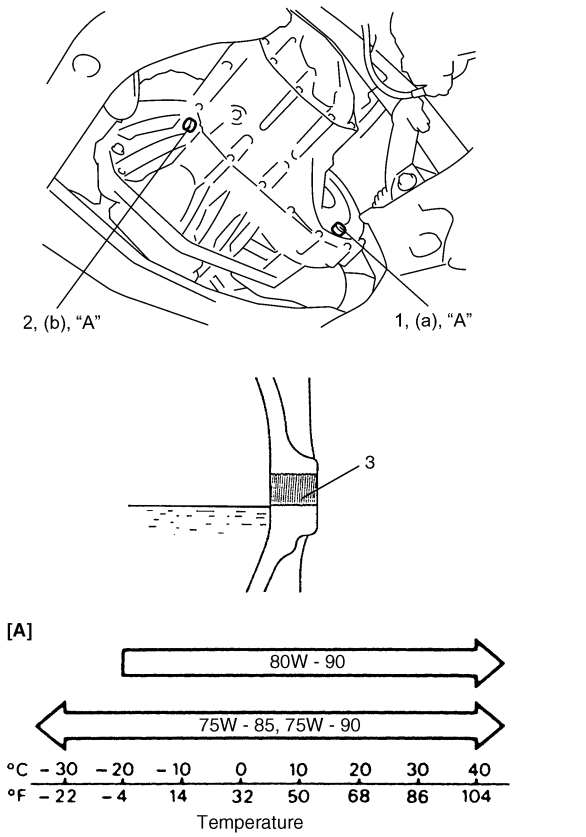

I5RW0A520005-01

Differential Side Oil Seal Replacement

S7RW0A5206003

1) Lift up vehicle and drain transaxle oil.
2) Remove drive shaft assembly and center shaft referring to “Front Drive Shaft Assembly Removal and Installation: Front in Section 3A”.
3) Remove oil seal (1) by using special tool.

Special tool
(A): 09913–50121

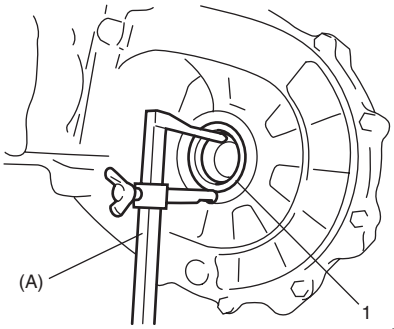

I5RW0A520006-02

4) Install a new oil seal (1) by using special tool.

NOTE

- **When installing oil seal, face its spring side inward.**
- **Install oil seal horizontally to surface of case.**

Special tool
(A): 09913–75810
(B): 09913–75510

Distance between case and right oil seal for 2WD
“a”: 9.5 – 10.5 mm (0.37 – 0.41 in.)

Distance between case and left oil seal
“b”: 0 – 1.0 mm (0 – 0.04 in.)

5) Apply grease to oil seal lip and at the same time check drive shaft where oil seal contacts and make sure of its smoothness.

“A”: Grease 99000–25011 (SUZUKI Super Grease A)

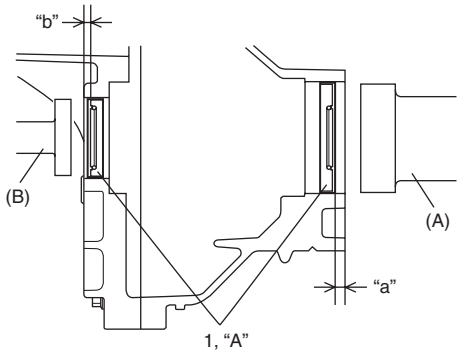

I5RW0A520051-01

6) Insert drive shaft assembly and center shaft referring to “Front Drive Shaft Assembly Removal and Installation: Front in Section 3A”.
7) Pour transaxle oil referring to “Manual Transaxle Oil Change”.

Gear Shift Control Lever and Cable Components

S7RW0A5206004

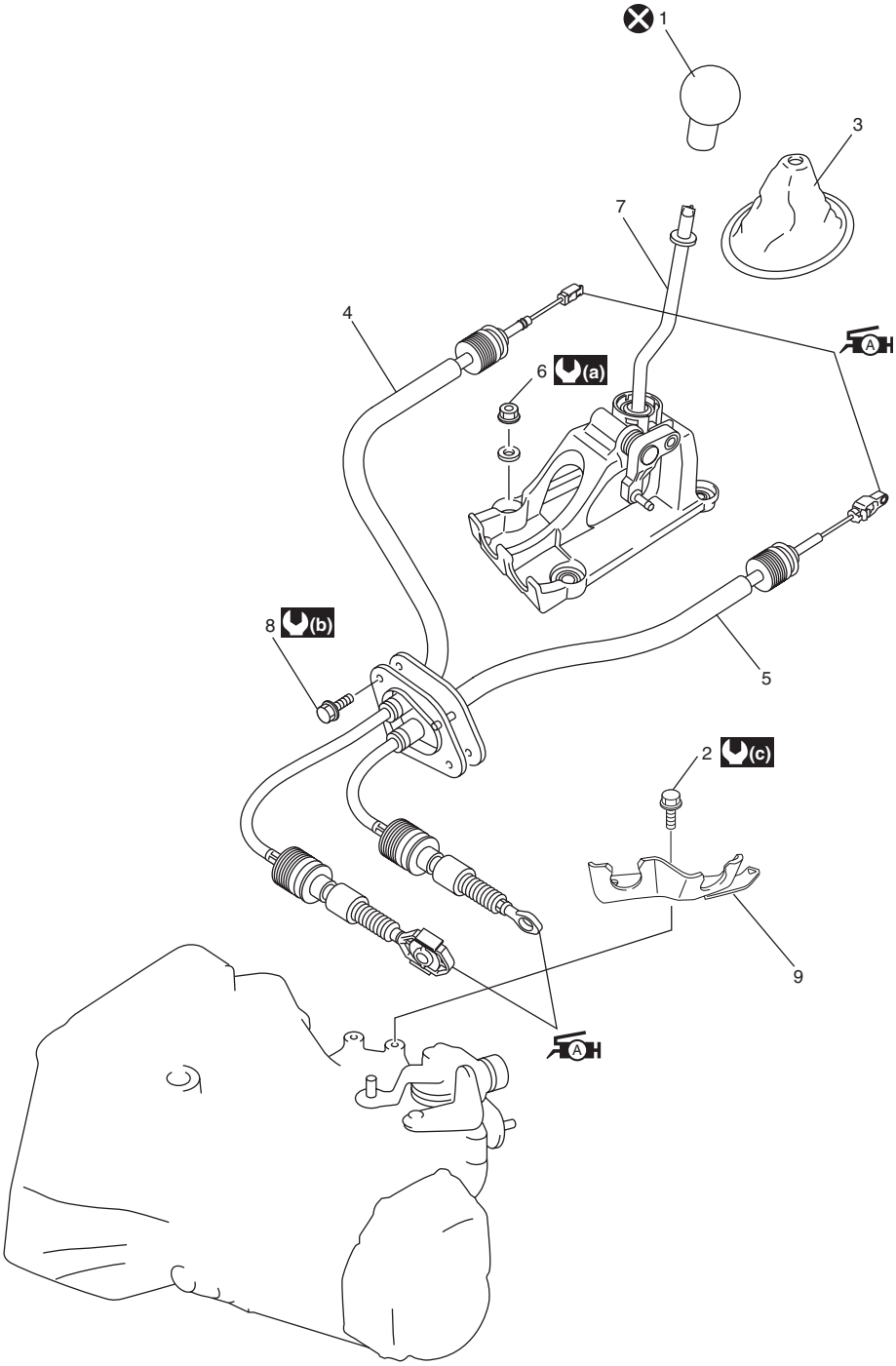

I5RW0A520008-02

1. Gear shift control lever knob	6. Gear shift control lever assembly mounting nut	(b) : 10 N·m (1.0 kgf-m, 7.5 lb-ft)
2. Cable bracket bolt	7. Gear shift control lever assembly	(c) : 23 N·m (2.3 kgf-m, 17.0 lb-ft)
3. Gear shift lever boot	8. Cable grommet bolt	: Do not reuse.
A 4. Gear shift control cable : Apply grease 99000-25010 to cable end.	9. Cable bracket	
A 5. Gear select control cable : Apply grease 99000-25010 to cable end.	(a) : 13 N·m (1.3 kgf-m, 9.5 lb-ft)	

Gear Shift Control Lever and Cable Removal and Installation

S7RW0A5206005

Removal

1) Remove console box.
2) Disconnect cable ends (5) from pivot (6) of gear shift control lever assembly by removing clip.
3) Disconnect gear shift and select control cables (1) from gear shift control lever assembly (2) while pulling quick joint (4) as shown in figure.
4) Remove gear shift control lever assembly mounting nuts (3) and gear shift lever assembly from floor panel.
5) Disconnect gear shift and select control cables from transaxle.
6) Remove cable grommet bolt, and then remove gear shift and select control cables from floor panel.

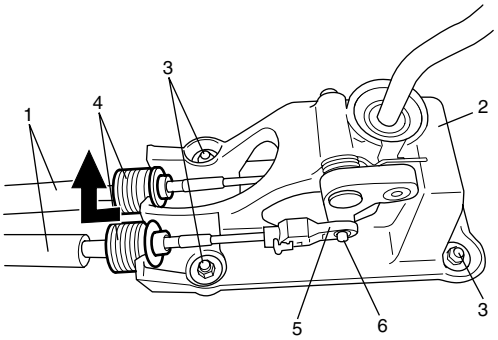

I4RS0A520003-01

Installation

Reverse removal procedure for installation nothing the following.

- Tighten each bolts and nuts to specified torque referring to “Gear Shift Control Lever and Cable Components”.
- Adjust gear select control cable referring to “Gear Select Control Cable Adjustment”.

Gear Select Control Cable Adjustment

S7RW0A5206006

1) Release lock plate (1) which restricts moving of cable end holder (2).
2) Push cable end holder (2) out from adjuster (4) using appropriate tool (3) to disengage cable.

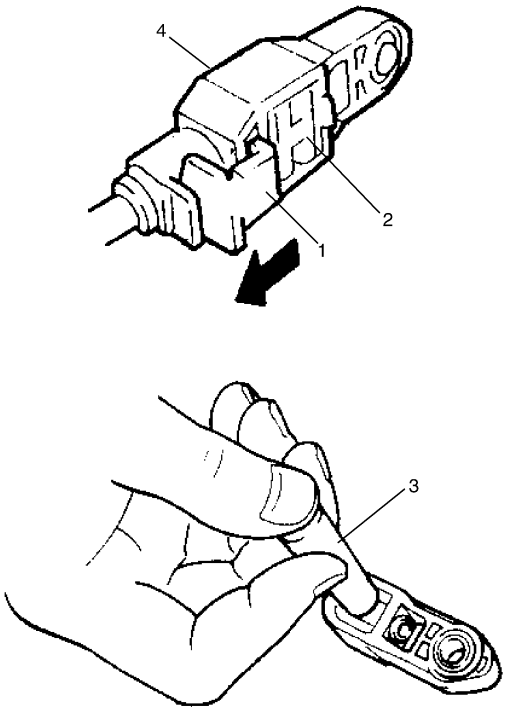

I4RS0A520004-01

3) Apply grease to pin (5) of gear shift control lever, and then install adjuster (1) into pin of gear shift control lever securely.

   "A": Grease 99000–25011 (SUZUKI Super Grease A)

4) Push cable end holder (2) in the direction of A.

   NOTE

   At this time, do not apply force in the cable operation direction B to adjuster.

5) Slide lock plate (3) in the direction of C, until it gets over the claw (4) of cable end holder.

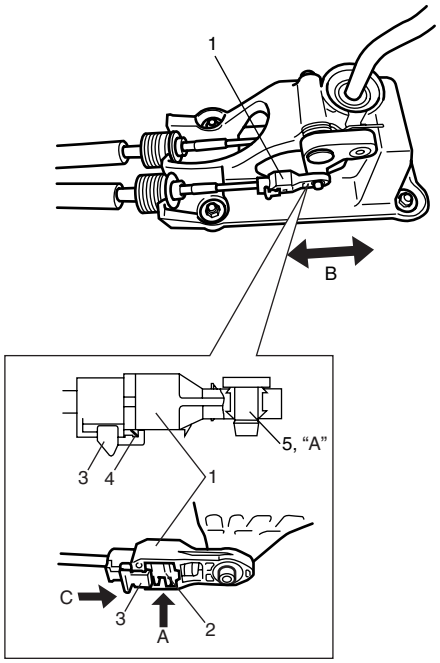

I4RS0A520005-01

Back Up Light Switch Removal and Installation

S7RW0A5206007

Removal

1) Remove battery and tray with ECM.
2) Disconnect back up light switch coupler (1).
3) Remove back up light switch.

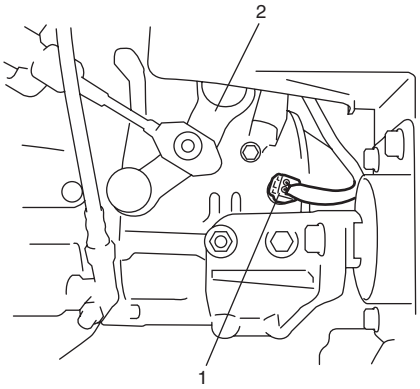

I5RW0A520009-01

2.	Gear shift and select shaft assembly

Installation

1) Apply oil to new O-ring (1) and tighten back up light switch (2) to specified torque.

   Tightening torque
   Back up light switch (a): 23 N·m (2.3 kgf-m, 17.0 lb-ft)

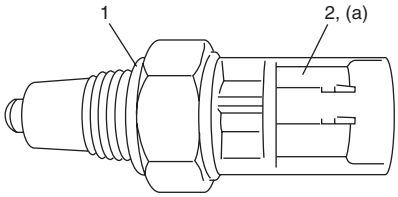

I3RH0A520006-01

2) Connect back up light switch coupler.
3) Install battery and tray with ECM.

Back Up Light Switch Inspection

S7RW0A5206008

Check back up light switch for function using ohmmeter.
Switch ON (Push): Continuity
Switch OFF (Release): No continuity

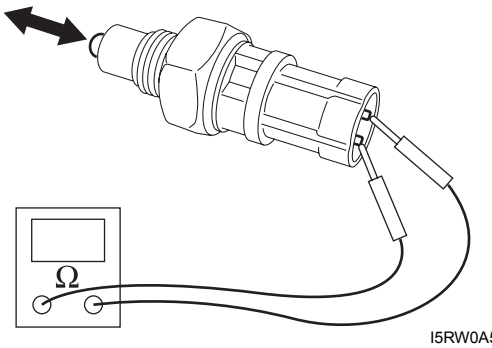

I5RW0A520050-01

Manual Transaxle Unit Components

S7RW0A5206009

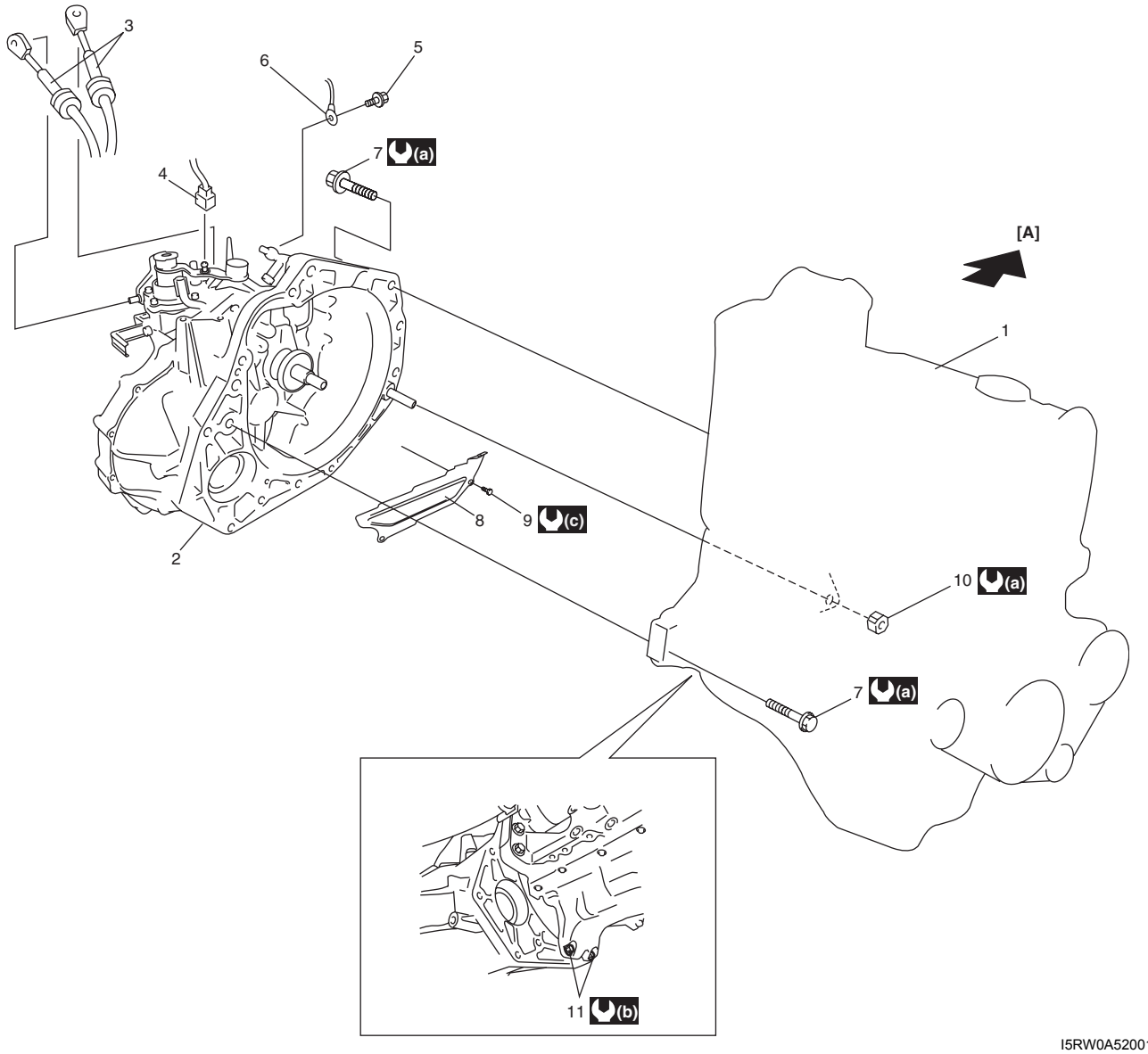

I5RW0A520010-02

[A]: Forward	5. Ground cable bolt	10. Transaxle to engine nut
1. Engine	6. Ground cable	11. Stiffener bolt
2. Transaxle	7. Transaxle to engine bolt	(a) : 85 N·m (8.5 kgf-m, 61.5 lb-ft)
3. Gear shift control cables	8. Clutch housing lower plate	(b) : 55 N·m (5.5 kgf-m, 40.0 lb-ft)
4. Back up light switch connector	9. Clutch housing lower plate bolt	(c) : 11 N·m (1.1 kgf-m, 8.0 lb-ft)

Manual Transaxle Unit Dismounting and Remounting

S7RW0A5206010

Dismounting

1) Drain coolant.
2) Remove battery and tray with ECM.
3) Remove air cleaner case and resonator.
4) Remove clutch fluid pipe referring to “Clutch Fluid Pipe Removal and Installation in Section 5C”.
5) Disconnect back up light switch coupler and undo wiring harness clamps.
6) Disconnect gear shift and gear select control cables (1) from transaxle.

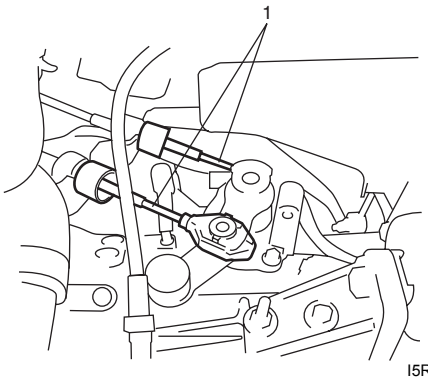

I5RW0A520011-01

7) Remove earth cable from transaxle.
8) Remove water inlet pipe.
9) Remove starting motor referring to “Starting Motor Dismounting and Remounting in Section 1I”.
10) Remove transaxle to engine bolts (1) of upper side.

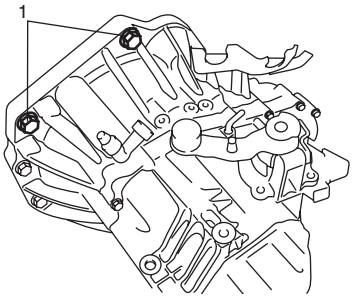

I5RW0A520012-01

11) Drain transaxle oil and transfer oil, if equipped.
12) Remove engine under covers.
13) Remove drive shaft assembly and center shaft referring to “Front Drive Shaft Assembly Removal and Installation: Front in Section 3A”.
14) Remove exhaust No.1, No.2 and No.3 pipes referring to “Exhaust Pipe and Muffler Removal and Installation in Section 1K”.
15) Remove suspension frame, engine front mounting member and engine mounting member referring to “Front Suspension Frame, Stabilizer Bar and/or Bush Removal and Installation in Section 2B” and “Engine Mountings Components in Section 1D”.
16) Remove transfer referring to “Transfer Dismounting and Remounting in Section 3C”, if equipped.
17) Remove clutch housing lower plate.
18) Support transaxle with transmission jack.
19) Remove left mounting (1) and left mounting bracket (2).

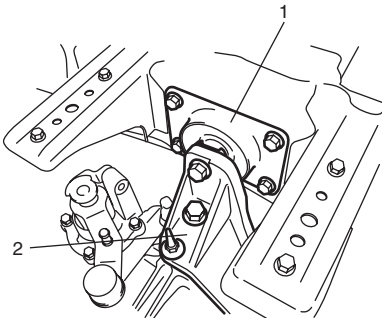

I5RW0A520013-01

20) Remove stiffener bolts (2), transaxle to engine bolts (1) and nut of lower side, and then lower transaxle.

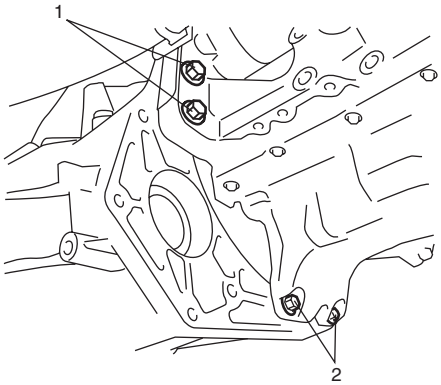

I5RW0A520014-01

Remounting

⚠ CAUTION

- **Care should be taken not to scratch oil seal lip with drive shaft while raising transaxle.**
- **Do not hit drive shaft joint with hammer when installing it into differential gear.**

Reverse dismounting procedure for remounting of transaxle, noting the following points.

- Tighten each bolts and nuts to specified torque referring to “Manual Transaxle Unit Components” and “Engine Mountings Components in Section 1D”.
- Set each clamp for wiring securely.
- Fill transaxle oil and transfer oil referring to “Manual Transaxle Oil Change” and “Transfer Oil Change in Section 3C”.
- Connect battery and check function of engine, clutch and transaxle.

Gear Shift and Select Shaft Assembly Components

S7RW0A5206011

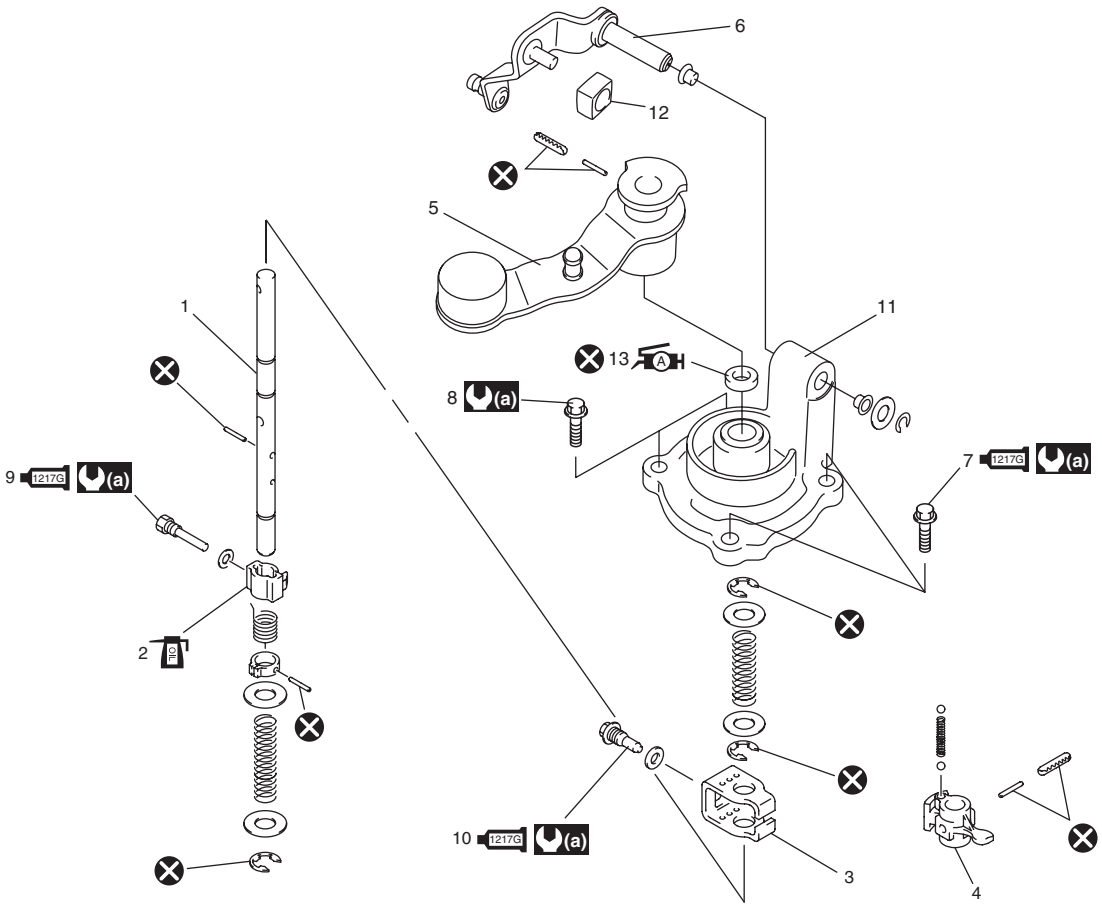

I6RW0C520001-01

1. Gear shift & select shaft	1217G 7. Gear shift guide case bolt No.1 : Apply sealant 99000-31260 to bolt thread.	13. Oil seal : Apply grease 99000-25011 to oil seal lip.
2. 5th & reverse gear shift cam	8. Gear shift guide case bolt No.2	(a) : 23 N·m (2.3 kgf-m, 17.0 lb-ft)
3. Gear shift interlock plate	1217G 9. 5th to reverse interlock guide bolt : Apply sealant 99000-31260 to bolt thread.	⊗ : Do not reuse.
4. Gear shift & select lever	1217G 10. Gear shift interlock bolt : Apply sealant 99000-31260 to bolt thread.	OIL : Apply transaxle oil.
5. Shift cable lever	11. Guide case	
6. Select cable lever	12. Select lever bush	

Gear Shift and Select Shaft Assembly Removal and Installation

S7RW0A5206012

Removal

1) Remove battery and tray with ECM.
2) Disconnect gear shift and gear select control cables from transaxle.
3) Remove gear shift interlock bolt (1) and 5th to reverse interlock guide bolt (2) from transaxle case.
4) Remove gear shift & select shaft assembly (3).

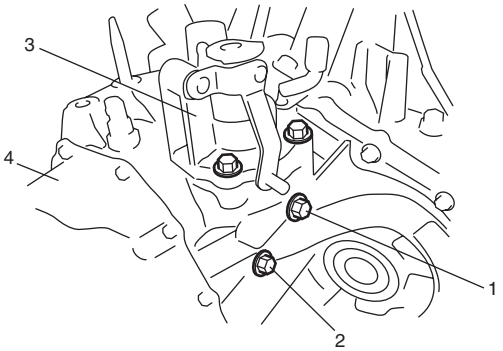

I5RW0A520016-01

4.	Transaxle side cover

Installation

1) Clean mating surface of guide case (1) and left case (5), apply sealant to left case as shown in figure by such amount that its section is 1.5 mm (0.059 in.) in diameter, mate guide case with left case.

   "B": Sealant 99000–31260 (SUZUKI Bond No.1217G)

2) Install guide case bolts No.1 to which sealant has been applied and guide case bolts No.2 (2), and tighten them to specified torque.

   : Sealant 99000–31260 (SUZUKI Bond No.1217G)

   Tightening torque
   Guide case bolt No.1: 23 N·m (2.3 kgf-m, 17.0 lb-ft)
   Guide case bolt No.2 (a): 23 N·m (2.3 kgf-m, 17.0 lb-ft)

3) Install washer and gear shift interlock bolt (3) to which sealant has been applied and then tighten it to specified torque.

   "A": Sealant 99000–31260 (SUZUKI Bond No.1217G)

   Tightening torque
   Gear shift interlock bolt (b): 23 N·m (2.3 kgf-m, 17.0 lb-ft)

4) Install washer and 5th to reverse interlock guide bolt (4) to which sealant has been applied and then tighten it to specified torque.

   "A": Sealant 99000–31260 (SUZUKI Bond No.1217G)

   Tightening torque
   5th to reverse interlock guide bolt (c): 23 N·m (2.3 kgf-m, 17.0 lb-ft)

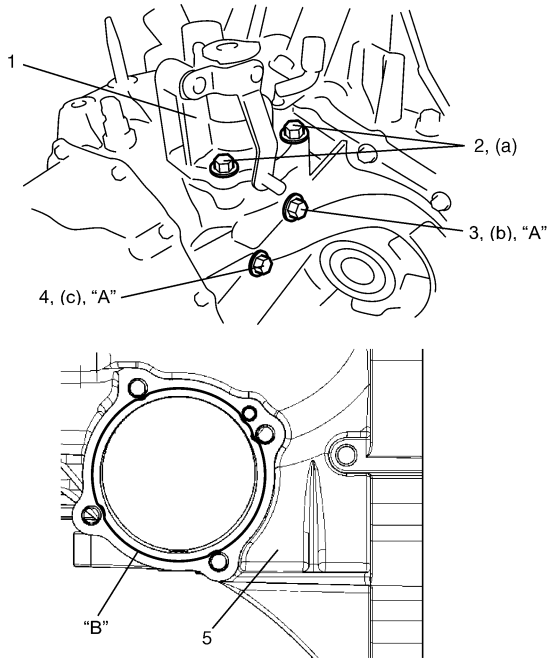

I5RW0A520017-02

5) Connect gear shift and gear select control cables to transaxle.
6) Install battery and tray with ECM.
7) Check input shaft for rotation in each gear position.

Gear Shift and Select Shaft Assembly Disassembly and Reassembly

S7RW0A5206013

1) Push spring pins out using 2.8 – 3.0 mm (0.11 – 0.12 in.) commercially available spring pin remover and specified spring pin removers as shown bellow.

   Special tool
   (A): 09922–85811 4.5 mm
   (B): 09925–78210 6.0 mm

2) Inspect component parts for wear, distortion or damage. If any detect is found, replace detective part with new one.

NOTE

- **When driving in spring pins, prevent shaft from being bent by supporting it with wood block.**
- **Assemble 5th & reverse gear shift cam with its pit and spring pin aligned.**
- **Make sure to select an appropriate spring by identifying the painted colors to keep gear shifting performance as designed.**
  - **Low speed select spring - Light blue**
  - **Reverse select spring - Pink**

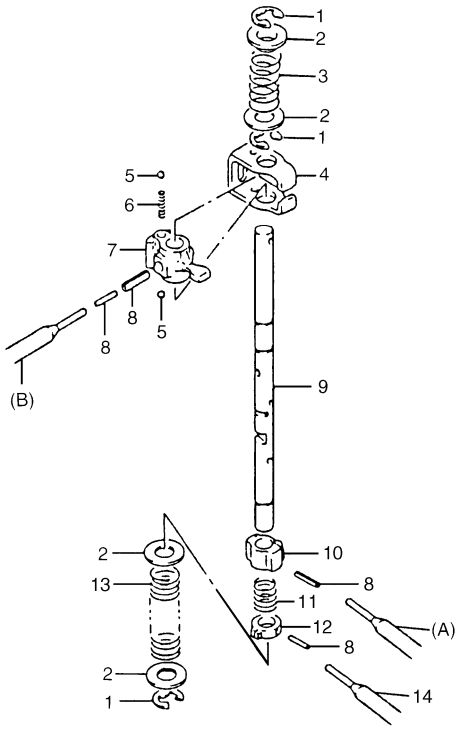

I6RW0C520002-01

1. E-ring	8. Spring pin
2. Washer	9. Gear shift & select shaft
3. Reverse select spring	10. 5th & reverse gear shift cam
4. Gear shift interlock plate	11. Cam guide return spring
5. Ball	12. 5th & reverse gear shift cam guide
6. Gear shift interlock spring	13. Low speed select spring
7. Gear shift & select lever	14. Spring pin remover

Manual Transaxle Assembly Components

S7RW0A5206014

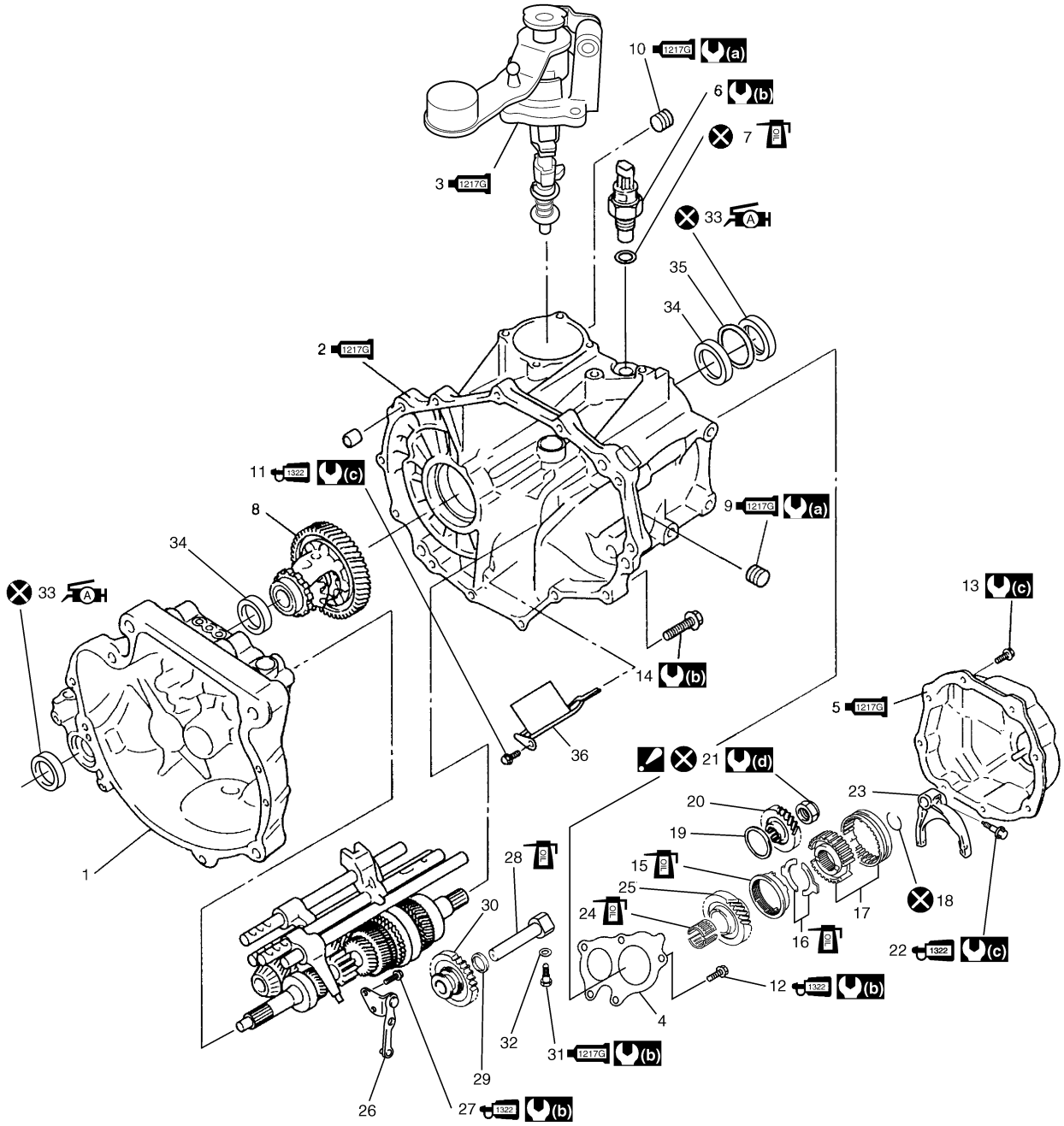

I5RW0A520018-03

1. Transaxle right case	1322 22. Shift fork bolt : Apply thread lock 99000-32110 to all around thread part of bolt.
1217G 2. Transaxle left case : Apply sealant 99000-31260 to mating surface of left case and right case.	23. 5th gear shift fork
1217G 3. Gear shift and select shaft assembly : Apply sealant 99000-31260 to mating surface of guide case and left case.	24. Needle bearing
4. Transaxle left case plate	25. Input shaft 5th gear
1217G 5. Transaxle side cover : Apply sealant 99000-31260 to mating surface of side cover and left case.	26. Reverse gear shift lever
6. Back up light switch	1322 27. Reverse gear shift lever bolt : Apply thread lock 99000-32110 to all around thread part of bolt.
7. O-ring	28. Reverse gear shaft
8. Differential assembly	29. Washer
1217G 9. Oil level / filler plug : Apply sealant 99000-31260 to all around thread part of plug.	30. Reverse idler gear

1217G	10. Oil drain plug : Apply sealant 99000-31260 to all around thread part of plug.	1217G	31. Reverse shaft bolt : Apply sealant 99000-31260 to thread part of bolt.
1322	11. Oil gutter bolt : Apply thread lock 99000-32110 to all around thread part of bolt.		32. Washer
1322	12. Left case plate bolt : Apply thread lock 99000-32110 to all around thread part of bolt.	A	33. Oil seal : Apply SUZUKI SUPER GREASE A 99000-25010 to Oil seal lip.
	13. Side cover bolts		34. Outer race
	14. Transaxle case bolts		35. Shim
	15. 5th speed synchronizer ring		36. Oil gutter
	16. 5th speed synchronizer lever	(a)	: 21 N·m (2.1 kgf-m, 15.5 lb-ft)
	17. 5th speed sleeve & hub	(b)	: 23 N·m (2.3 kgf-m, 17.0 lb-ft)
	18. Circlip	(c)	: 10 N·m (1.0 kgf-m, 7.5 lb-ft)
	19. Bearing set shim	(d)	: 100 N·m (10.0 kgf-m, 72.5 lb-ft)
	20. Countershaft 5th gear		: Do not reuse.
	21. Countershaft nut : After tightening nut to specified torque, caulk nut securely.		: Apply transaxle oil.

Fifth Gear Disassembly and Reassembly

S7RW0A5206015

Disassembly

1) Remove cover bolts and take off transaxle side cover.

⚠ CAUTION

Care should be taken not to distort side cover when it is removed from left case.

2) Using special tool, remove circlip (1).

Special tool
: 09900–06107

3) Remove shift fork shaft bolt (2).
4) Remove gear shift fork (3) and 5th gear all together. Use gear puller for removal if spline fitting of hub is tight.

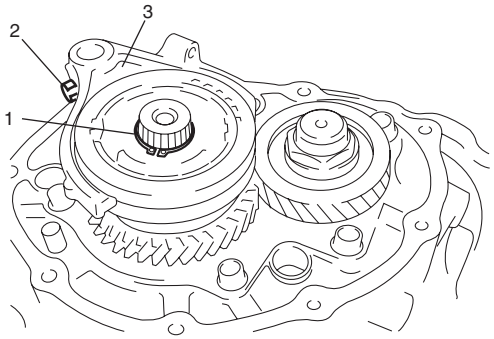

I4RH01520015-01

5) Unfasten caulking of countershaft nut (2), install input shaft 5th gear (1) and special tool to stop rotation of shafts, and then remove countershaft nut (2).

Special tool
(A): 09927–76060

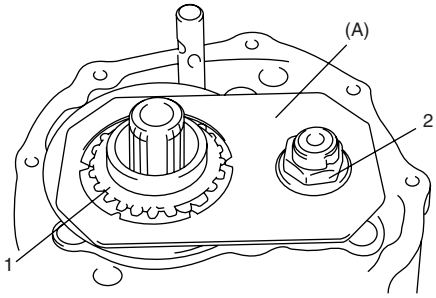

I4RH01520016-01

6) Remove input shaft 5th gear, needle bearing and then countershaft 5th gear (1). Gear puller (2) would be necessary if spline fitting of countershaft 5th gear is tight.

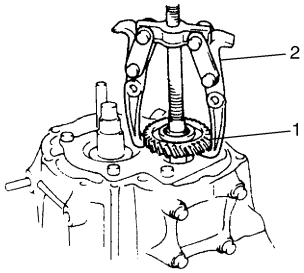

I4RH01520017-01

Reassembly

1) Install countershaft 5th gear (1) to countershaft facing machined boss “A” inward.

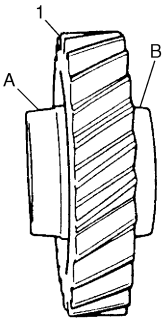

I2RH01520088-01

A:	Machined boss (Inside)
B:	No machining (Outside)

2) Apply transaxle oil to needle bearing, and install it to input shaft.
3) Install input shaft 5th gear (1) to input shaft.
4) Install special tool in order to stop shaft rotation.

Special tool
(A): 09927–76060

5) Tighten new countershaft nut (2) to specified torque, and caulk nut securely.

Tightening torque
Countershaft nut (a): 100 N·m (10.0 kgf-m, 75.0 lb-ft)

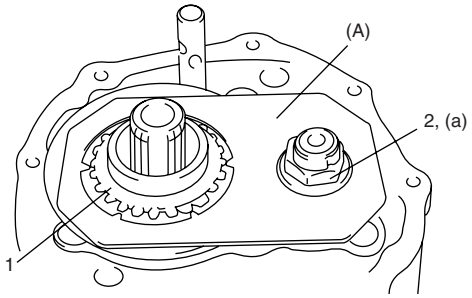

I4RH01520047-01

6) Assemble 5th speed synchronizer sleeve (1), hub (2), 5th speed synchronizer levers (3) and synchronizer ring (4) as follows.

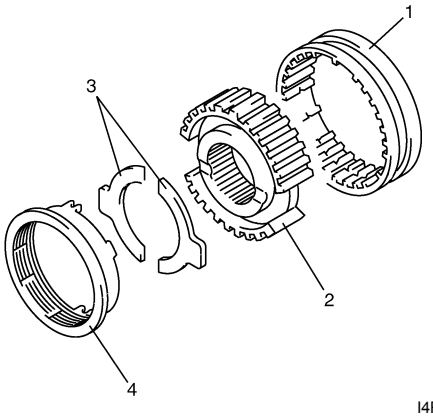

I4RH01520054-01

a) Install hub (1) to 5th speed synchronizer sleeve (2) in specified direction as shown in figure.

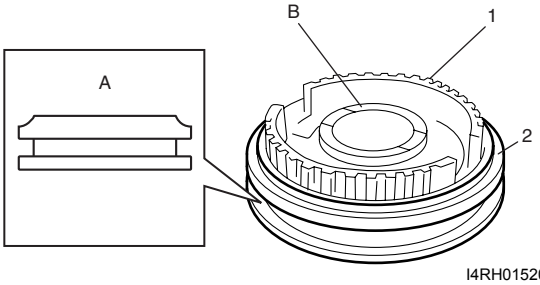

I4RH01520048-01

A:	Chamfered side
B:	Long boss

b) Fit 5th speed synchronizer levers (1) to hub (2) in specified position as shown in figure.

NOTE

Align protrusion “A” of 5th speed synchronizer levers (1) with groove of hub (2).

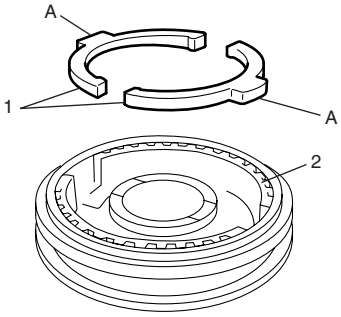

I4RH01520049-01

c) Install synchronizer ring (1) to hub (2) in specified direction as shown in figure.

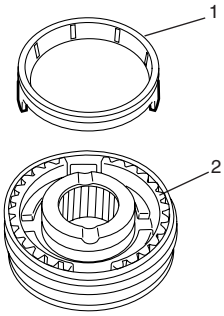

I4RH01520055-01

7) Fit 5th gear shift fork (1) to sleeve (3) and hub (2) assembly, and install them into input shaft and gear shift shaft, aligning punch mark (4) with matching mark (5) on input shaft.

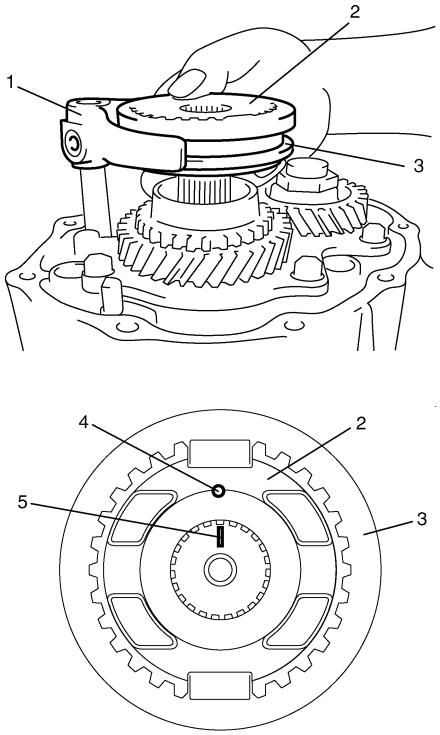

I3RH0A520080-01

8) Tighten shift fork shaft bolt (2) to which thread lock cement has been applied.

"A": Thread lock cement 99000–32110 (Thread Lock Cement Super 1322)

Tightening torque
Shift fork shaft bolt (a): 10 N·m (1.0 kgf-m, 7.5 lb-ft)

9) Using special tool, install new circlip (1) to input shaft (3).

Special tool
: 09900–06107

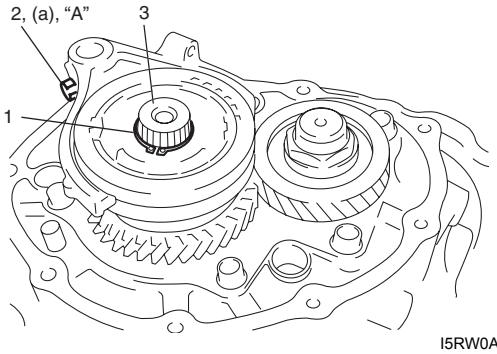

I5RW0A520019-01

10) Clean mating surface of both left case and side cover (1), apply sealant to side cover as shown in figure by such amount that its section is 1.5 mm (0.059 in.) in diameter, mate it with left case, and then tighten side cover bolts with specified torque.

"B": Sealant 99000–31260 (SUZUKI Bond No.1217G)

Tightening torque
Side cover bolt (a): 10 N·m (1.0 kgf-m, 7.5 lb-ft)

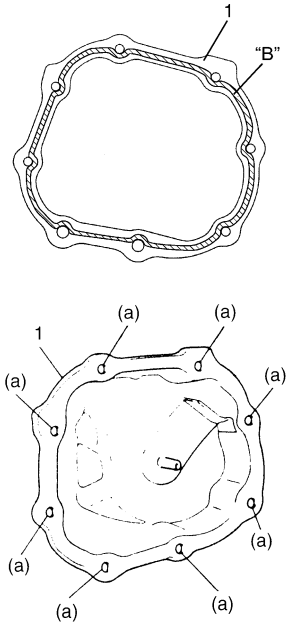

I5RW0A520020-01

Manual Transaxle Assembly Disassembly and Reassembly

S7RW0A5206016

Disassembly

1) Remove left case plate bolts (1), and take off left case plate (2).

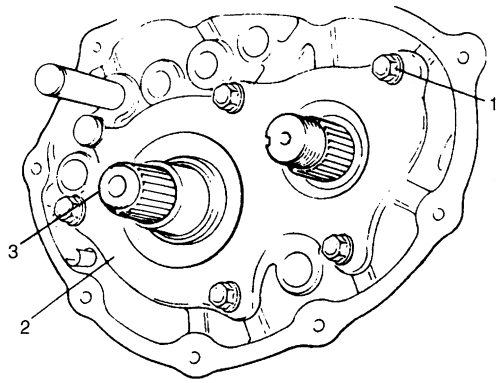

I4RH01520018-01

3.	Input shaft

2) Remove bearing set shim.
3) Remove snap ring (1) using special tool.

Special tool
(A): 09900–06107

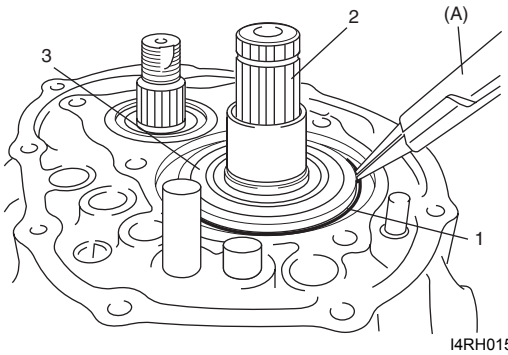

I4RH01520019-01

2.	Input shaft
3.	Input shaft left bearing

4) Remove gear shift locating bolts (1), then take out locating springs and steel balls.

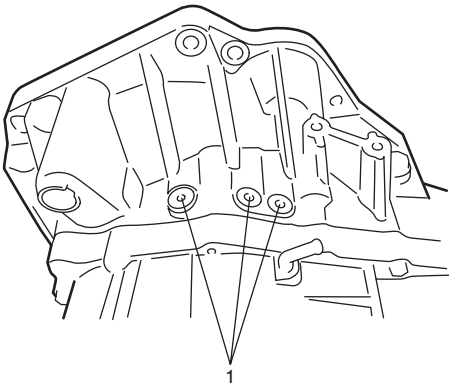

I5RW0A520021-01

5) Remove reverse shaft bolt (2) with washer.
6) Remove transaxle case bolts (1) from outside and another bolts from clutch housing side.
7) Tapping left case flanges with plastic hammer, remove left case.

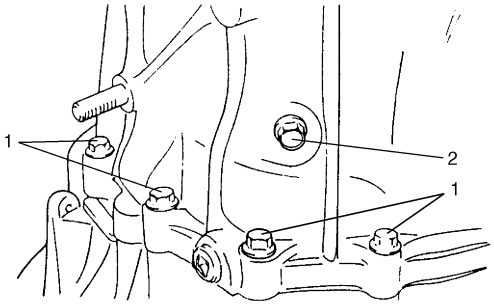

I4RH01520020-01

8) Pull out reverse gear shaft (1) with washer (2), then take off reverse idler gear (3).
9) Remove reverse gear shift lever bolts (4) and reverse gear shift lever (5).
10) Pull out 5th & reverse gear shift guide shaft (6) together with 5th & reverse gear shift shaft (7).

NOTE

When removing 5th & reverse gear shift shaft (7) and guide shaft (6), push up high speed gear shift shaft and shift it to 4th to facilitate removal of 5th & reverse shift shaft.

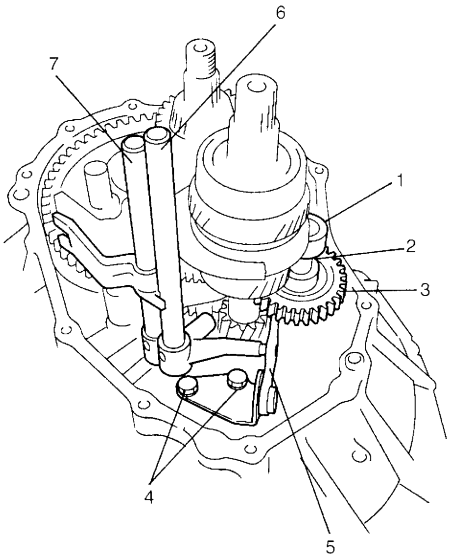

I3RH0A520012-01

11) Tapping input shaft end with plastic hammer, push it out as assembly from case a little, then take out input shaft assembly (1), countershaft assembly (2), high speed gear shift shaft (3) and low speed gear shift shaft (4) all at once.

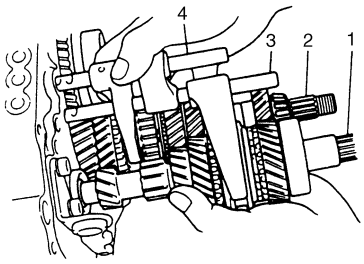

I2RH01520035-01

12) Remove countershaft left bearing outer race from left case.
13) Remove differential assembly from right case.

Reassembly

1) Install differential assembly into right case.
2) Join input shaft (5), countershaft (4), low speed gear shift shaft (2) and high speed gear shift shaft (3) assemblies all together, then install them into right case (1) so as not to damage oil seal by input shaft spline.

NOTE

- **Input shaft right bearing on shaft can be installed into right case (1) by tapping shaft with plastic hammer.**
- **Make sure that countershaft is engaged with final gear while installing.**

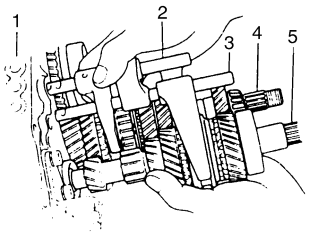

I2RH01520080-01

3) Install 5th & reverse gear shift shaft (1) with 5th & reverse gear shift guide shaft (2) into right case (5). Reverse gear shift arm (4) has to be joined with reverse gear shift lever (3) at the same time.

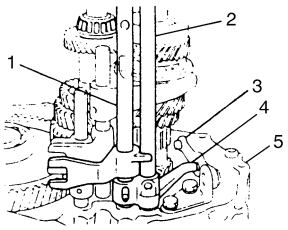

I3RH0A520013-01

4) Make reverse idler gear (1) with reverse gear shift lever (2), insert reverse gear shaft (3) and washer (6) into case (4) through idler gear and then align bolt hole “a” in shaft with notch “b” in case.
5) Fasten reverse gear shift lever bolts (5) after applying thread lock cement.

“A”: Thread lock cement 99000–32110 (Thread Lock Cement Super 1322)

Tightening torque
Reverse gear shift lever bolt (a): 23 N·m (2.3 kgf-m, 17.0 lb-ft)

NOTE

Check to confirm that reverse gear shift lever end has clearance “c” to idler gear groove.

<u>Distance between lever end and idler gear shaft</u>
“c”: 0.5 – 1.0 mm (0.02 – 0.04 in.)

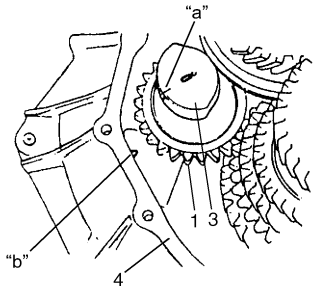

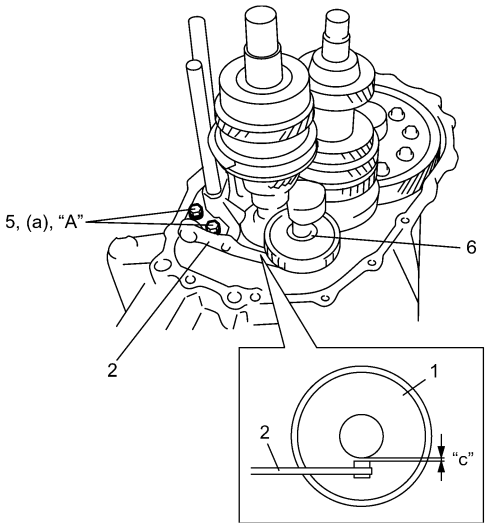

I5RW0A520022-02

6) Clean mating surfaces of both right and left cases, apply sealant to left case (2) as shown in the figure by such amount that its section is 1.5 mm (0.059 in.) in diameter then mate it with right case (1).

"A": Sealant 99000–31260 (SUZUKI Bond No.1217G)

7) Tighten case bolts (3) from outside and tighten another case bolts from clutch housing side to specified torque.

Tightening torque
Transaxle case bolt (a): 23 N·m (2.3 kgf-m, 17.0 lb-ft)

8) Install reverse shaft bolt (4) to which thread lock cement has been applied, with aluminum washer and tighten it to specified torque.

"B": Sealant 99000–31260 (SUZUKI Bond No.1217G)

Tightening torque
Reverse shaft bolt (b): 23 N·m (2.3 kgf-m, 17.0 lb-ft)

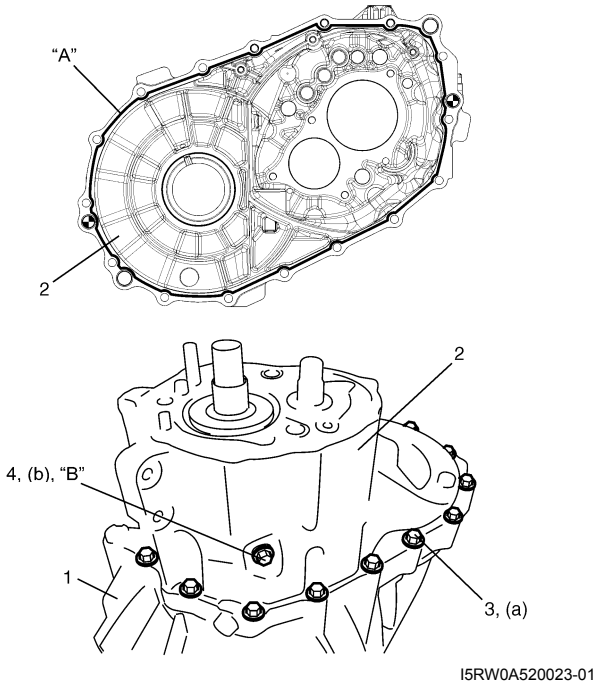

I5RW0A520023-01

9) Check locating springs (2, 4 and 5) for deterioration and replace with new ones as necessary.

Locating spring

Locating spring free length	Standard	Service limit
Low speed (2)	53.1 mm (2.091 in.)	47.8 mm (1.881 in.)
High speed (4)	45.9 mm (1.807 in.)	41.4 mm (1.629 in.)
5th & reverse (5)	29.9 mm (1.777 in.)	27.0 mm (1.062 in.)

10) Install steel balls (3) and locating springs (2, 4 and 5) for respective gear shift shaft and tighten bolts (1) to which thread lock cement has been applied.

"A": Thread lock cement 99000–32110 (Thread Lock Cement Super 1322)

Tightening torque
Gear shift locating bolt (a): 13 N·m (1.3 kgf-m, 9.5 lb-ft)

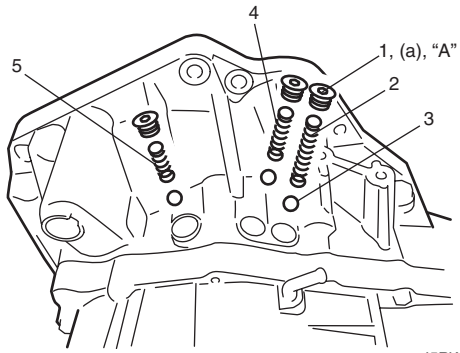

I5RW0A520024-02

11) Install new snap ring (1) using special tool.

Special tool
(A): 09900–06107

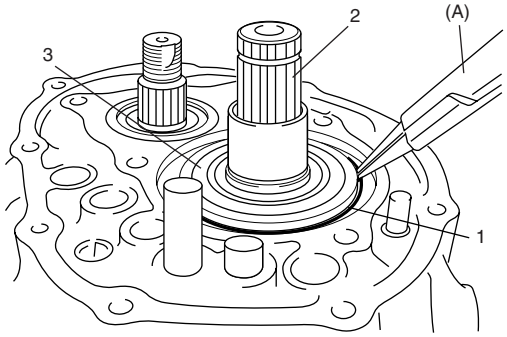

I3RH0A520016-01

2.	Input shaft
3.	Input shaft left bearing

12) To seat countershaft left bearing outer race (2) to bearing cone, tap cup by using special tool and plastic hammer.

Special tool
(A): 09913–70123

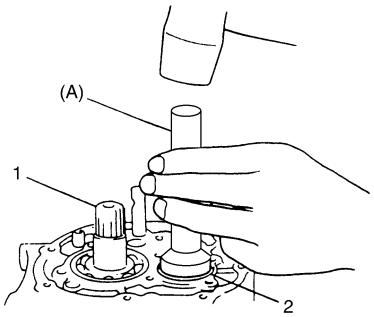

I5RW0A520025-01

1. Input shaft

13) Before selecting shim, keep pushing outer race with the power of 100 N (10.0 kgf) and turn countershaft (2) 10 time or more.

14) Put a shim (3) on bearing outer race (4) provisionally, place straight edge (1) over it and compress it by hand through straight edge, and then measure “a” (Clearance between case surface (5) and straight edge) by using feeler gauge (6).

Clearance between case surface and straight edge
“a”: 0.08 – 0.12 mm (0.0032 – 0.0047 in.)

15) By repeating step 14), select a suitable shim which adjusts clearance “a” to specification and put it on bearing outer race.

NOTE

Insert 0.1 mm (0.004 in.) feeler to know whether or not a shim fulfills specification quickly.

Available countershaft 5th gear shim thickness

0.55 mm (0.021 in.)	**0.7 mm (0.027 in.)**	**0.85 mm (0.033 in.)**	**1.0 mm (0.039 in.)**
0.6 mm (0.023 in.)	**0.75 mm (0.029 in.)**	**0.9 mm (0.035 in.)**	**1.05 mm (0.041 in.)**
0.65 mm (0.025 in.)	**0.8 mm (0.031 in.)**	**0.95 mm (0.037 in.)**	**1.1 mm (0.043 in.)**

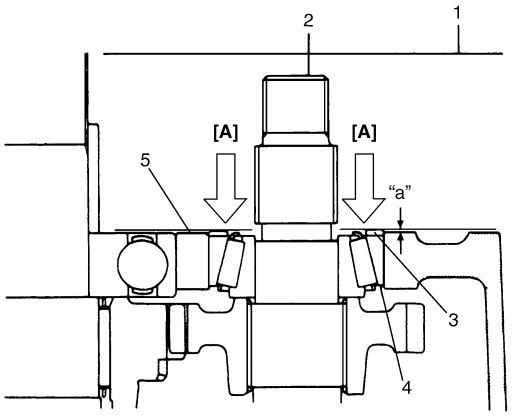

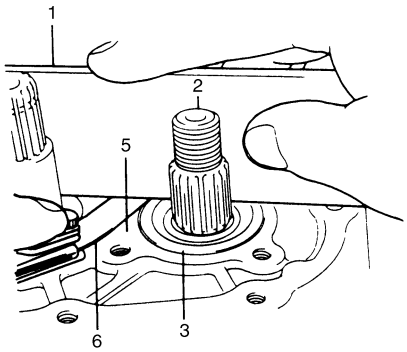

I7RW01520012-01

2. Countershaft

16) Place left case plate (2) inserting its end in groove of shift guide shaft (4) and then tighten bolts (1) to which thread lock cement has been applied.

NOTE

After tightening bolts, make sure that countershaft can be rotated by hand feeling certain load.

"A": Thread lock cement 99000–32110 (Thread Lock Cement Super 1322)

Tightening torque
Left case plate bolt (a): 23 N·m (2.3 kgf-m, 17.0 lb-ft)

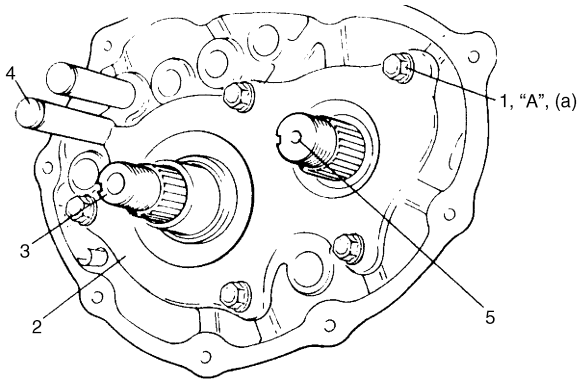

I2RH01520087-01

3.	Input shaft
5.	Countershaft

Right Case Disassembly and Reassembly

S7RW0A5206017

Disassembly

1) Remove differential side oil seal from right case referring to "Differential Side Oil Seal Replacement", if necessary.
2) Remove differential side bearing outer race (1) using brass bar (2), if necessary.

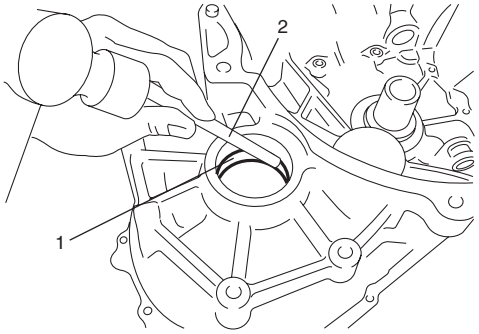

I4RH01520024-01

3) Remove input shaft oil seal by using special tool, if necessary.

Special tool
(A): 09913–75830

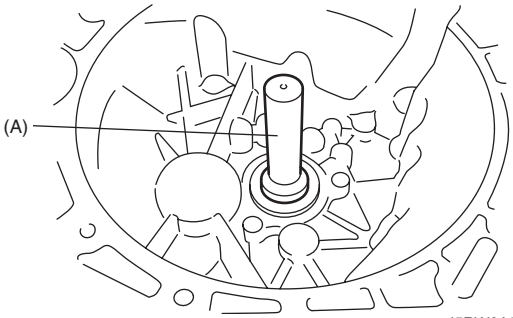

I5RW0A520026-01

4) Pull out countershaft right bearing outer race by using special tools, if necessary.

Special tool
(A): 09930–30104
(B): 09941–64511

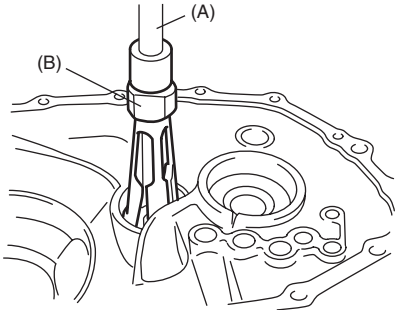

I5RW0A520027-01

Reassembly

1) Install input shaft oil seal facing its spring side upward until it becomes flush with case surface. Use special tool and hammer for installation and apply grease to oil seal lip.

: Grease 99000–25011 (SUZUKI Super Grease A)

Special tool
(A): 09913–76010

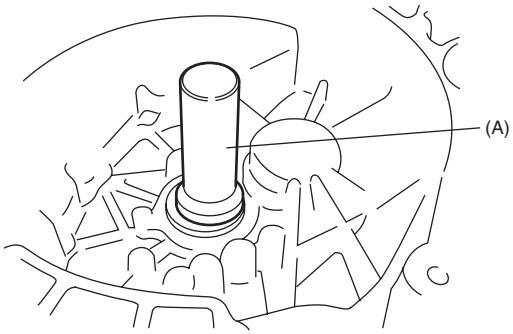

I5RW0A520028-01

2) Install countershaft right bearing outer race (1) by using special tools and hammer.

Special tool
(A): 09913–75821
(B): 09924–84510–004

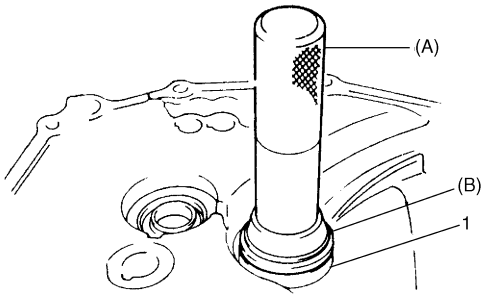

I5RW0A520029-02

3) Install differential side bearing outer race by using special tool and hammer.

Special tool
(A): 09924–74510
(B): 09925–14520

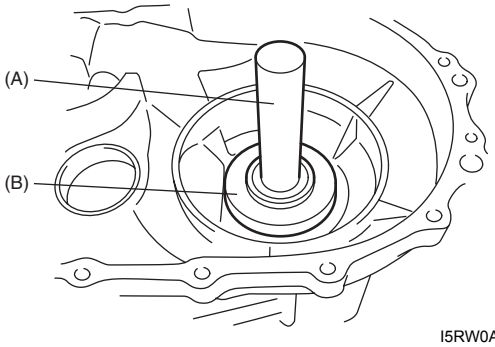

I5RW0A520030-01

Left Case Disassembly and Reassembly

S7RW0A5206018

Disassembly

1) Removal oil gutter (1), if necessary.

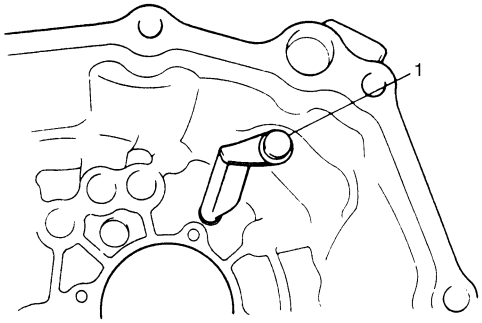

I4RH01520028-01

2) Remove oil seal using flat end rod or the like.
3) Remove differential side bearing outer race (1) using special tools.

Special tool
(A): 09942–15511
(B): 09944–96011

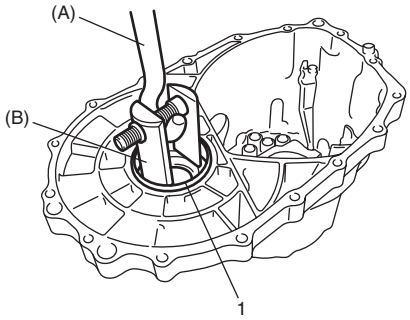

I5RW0A520031-01

Reassembly

1) If oil gutter has been removed, install it with bolt to which thread lock cement has been applied.

   "A": Thread lock cement 99000–32110 (Thread Lock Cement Super 1322)

   Tightening torque
   Oil gutter bolt (a): 10 N·m (1.0 kgf-m, 7.5 lb-ft)

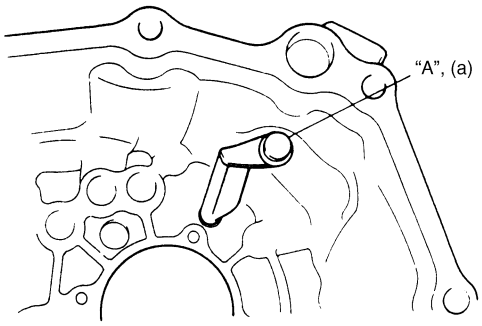

I2RH01520043-01

2) Select differential side shim as follows.
   a) Keep pushing outer race (4) with the power of 35 N (3.5 kgf) and turn differential case 10 times or more.
   b) Measure distance "a" of differential assembly (1).
   c) Measure depth "b" of left case (2) and "c" of right case (3).
   d) Calculate the clearance of "d" by the following expressions.

Clearance of "d" = Depth "b" + Depth "c" – Distance "a"

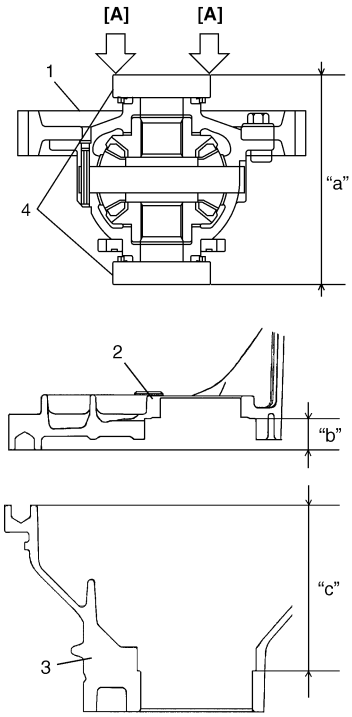

I7RW01520013-01

[A]: Press 35 N (3.5 kgf)

3) Select shim closest to clearance "d" from among the following available sizes.

Available shim thickness

Clearance "d"	Select shim
0.800 – 0.839 mm (0.0315 – 0.0330 in.)	1.00 mm (0.0394 in.)
0.840 – 0.879 mm (0.0331 – 0.0345 in.)	1.04 mm (0.0409 in.)
0.880 – 0.919 mm (0.0346 – 0.0362 in.)	1.08 mm (0.0425 in.)
0.920 – 0.959 mm (0.0362 – 0.0378 in.)	1.12 mm (0.0441 in.)
0.960 – 0.999 mm (0.0378 – 0.0393 in.)	1.16 mm (0.0457 in.)
1.000 – 1.039 mm (0.0394 – 0.0409 in.)	1.20 mm (0.0472 in.)
1.040 – 1.079 mm (0.0409 – 0.0425 in.)	1.24 mm (0.0488 in.)
1.080 – 1.119 mm (0.0425 – 0.0441 in.)	1.28 mm (0.0504 in.)
1.120 – 1.159 mm (0.0441 – 0.0456 in.)	1.32 mm (0.0520 in.)
1.160 – 1.199 mm (0.0457 – 0.0472 in.)	1.36 mm (0.0535 in.)
1.200 – 1.239 mm (0.0472 – 0.0488 in.)	1.40 mm (0.0551 in.)
1.240 – 1.279 mm (0.0488 – 0.0504 in.)	1.44 mm (0.0567 in.)
1.280 – 1.319 mm (0.0504 – 0.0519 in.)	1.48 mm (0.0583 in.)
1.320 – 1.359 mm (0.0520 – 0.0535 in.)	1.52 mm (0.0598 in.)
1.360 – 1.399 mm (0.0535 – 0.0551 in.)	1.56 mm (0.0614 in.)
1.400 – 1.439 mm (0.0551 – 0.0567 in.)	1.60 mm (0.0630 in.)
1.440 – 1.479 mm (0.0567 – 0.0582 in.)	1.64 mm (0.0646 in.)
1.480 – 1.529 mm (0.0583 – 0.0602 in.)	1.68 mm (0.0661 in.)

4) Put shim and then install differential side bearing outer race using special tools.

Input Shaft and Countershaft Components

S7RW0A5206019

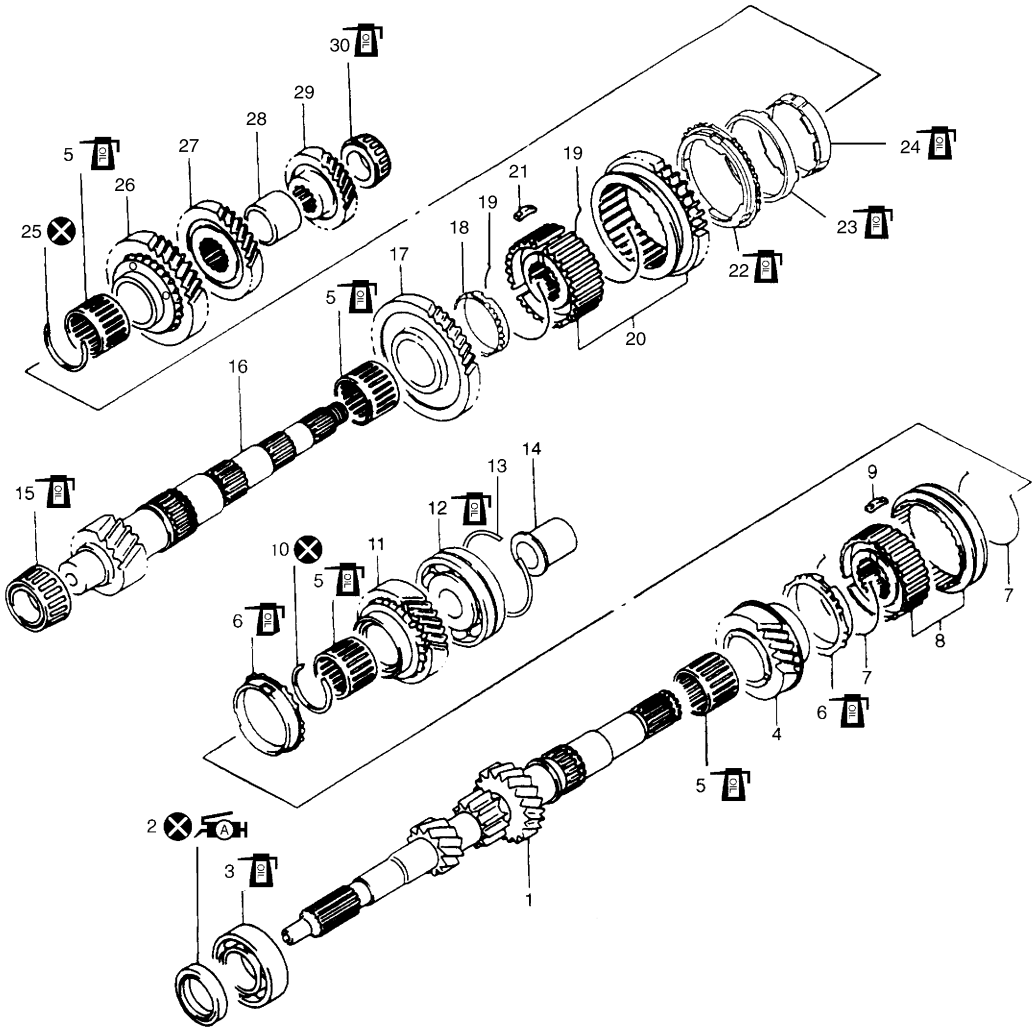

I3RH0A520017-01

1. Input shaft	12. Input shaft left bearing	23. 2nd gear synchronizer center cone
2. Oil seal : Apply grease 99000-25010 to oil seal lip.	13. Circlip	24. 2nd gear synchronizer inner ring
3. Input shaft right bearing	14. 5th gear spacer	25. Circlip
4. Input shaft 3rd gear	15. Countershaft right bearing	26. Countershaft 2nd gear
5. Needle bearing	16. Countershaft	27. Countershaft 3rd gear
6. High speed synchronizer ring	17. Countershaft 1st gear	28. 3rd & 4th gear spacer
7. High speed synchronizer spring	18. Low speed synchronizer ring	29. Countershaft 4th gear
8. High speed synchronizer sleeve & hub	19. Low speed synchronizer spring	30. Countershaft left bearing
9. High speed synchronizer key	20. Low speed synchronizer sleeve & hub	: Do not reuse.
10. Circlip	21. Low speed synchronizer key	: Apply transaxle oil.
11. Input shaft 4th gear	22. 2nd gear synchronizer outer ring	

Input Shaft Disassembly and Reassembly

S7RW0A5206020

Disassembly

1) Remove input shaft right bearing (2) from input shaft (1) using bearing puller (3) and hydraulic press.

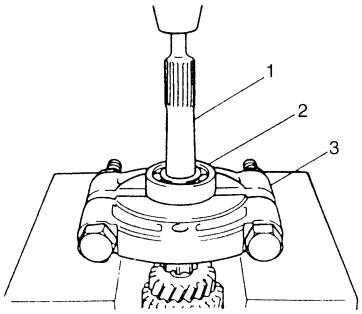

I4RH01520029-01

2) Drive out 5th gear spacer (2), left bearing (3) and 4th gear (4) all at once using puller (5) and hydraulic press.

⚠ CAUTION

- **To avoid gear tooth from being damaged, support it at flat side of bearing puller.**
- **Stop press work in the middle way and take out 5th gear bush to prevent it from being compressed and then continue to remove bearing with gear.**

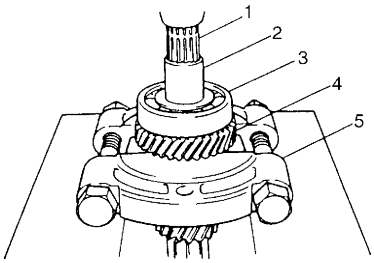

I3RH0A520018-01

1. Input shaft

3) Take out 4th gear needle bearing and high speed synchronizer ring.

4) Using special tool, remove circlip (1).

NOTE

For smooth removal of circlip, it is recommended to correct tool tips to be flat.

Special tool
(A): 09900–06107

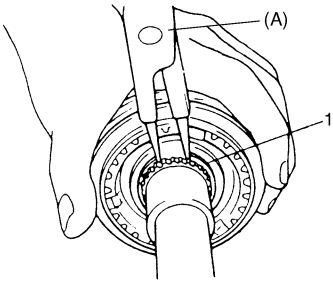

I2RH01520046-01

5) Drive out high speed synchronizer sleeve & hub assembly (2) together with 3rd gear (3) by using puller (4) and hydraulic press.

⚠ CAUTION

To avoid gear tooth from being damaged, support it at flat side of bearing puller.

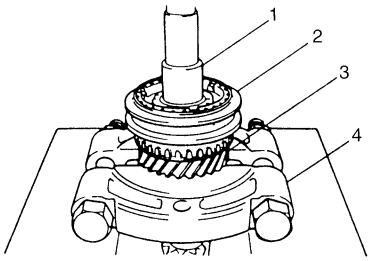

I2RH01520097-01

1. Input shaft

6) Take out 3rd gear needle bearing from input shaft.

7) Disassemble synchronizer sleeve & hub assembly.

Reassembly

1) Clean all components thoroughly, inspect them for any abnormality and replace with new ones as necessary.
2) Check clearance “a” between synchronizer ring (2) and gear (1), key slot width “b” in synchronizer ring and each chamfered tooth of gear and synchronizer ring and replace with new one, if necessary. Also, check gear tooth.

   Clearance “a” between synchronizer ring and gear
   Standard: 1.0 – 1.4 mm (0.040 – 0.055 in.)
   Service limit: 0.5 mm (0.020 in.)

   Key slot width “b”
   Standard: 10.0 – 10.2 mm (0.394 – 0.401 in.)
   Limit: 10.45 mm (0.411 in.)

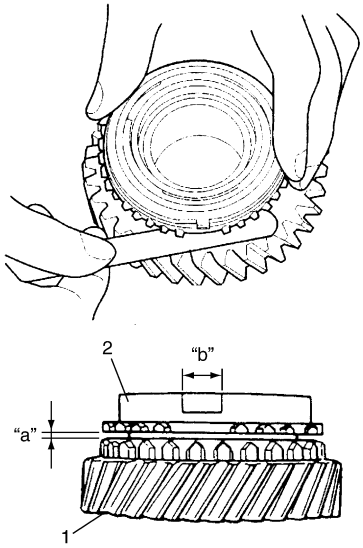

I5JB0A520054-01

3) To ensure lubrication of input shaft (1), air blow oil holes (2) and make sure that they are free from any obstruction.

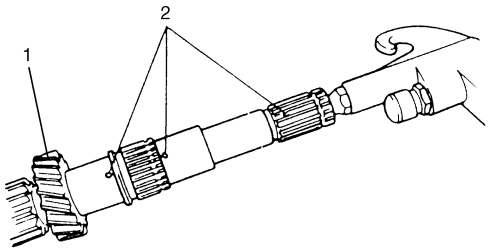

I2RH01520049-01

4) Fit high speed synchronizer sleeve (4) to hub (3), insert 3 keys (2) in it and then set springs (1) as shown in figure.

NOTE

- **No specific direction is assigned to high speed synchronizer sleeve or each key but it is assigned as assembly.**
- **Size of high speed synchronizer sleeve, hub, keys and springs are the smaller than those of low speed one.**

Synchronizer key installation position
A = B

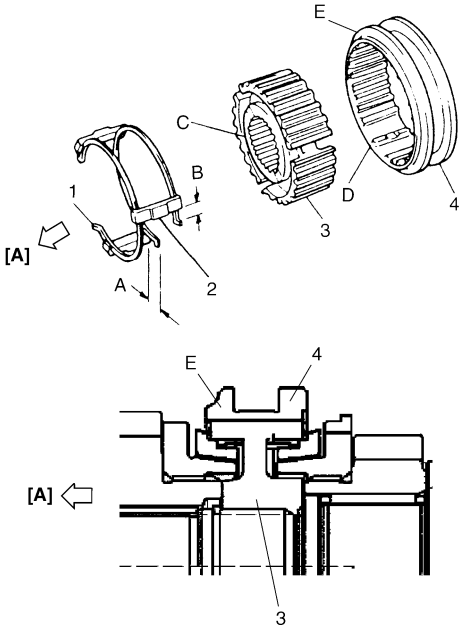

I5RW0A520033-01

[A]:	4th gear side
C:	Left side (Short flange)
D:	Key way
E:	Projecting end

5) Drive in right bering (1) to input shaft (2) using special tool and hydraulic press.

   Special tool
   (A): 09913–80113

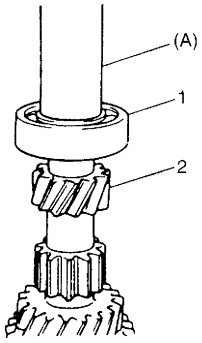

I3RH0A520019-01

6) Install 3rd gear needle bearing (4), apply oil to it, then install 3rd gear (1) and synchronizer ring (2).
7) Drive in high speed sleeve & hub assembly (3) by using special tool and hydraulic press.

NOTE

- **While press-fitting sleeve & hub, make sure that synchronizer ring key slots are aligned with keys (5) in sleeve & hub assembly.**
- **Check free rotation of 3rd gear after press-fitting sleeve & hub assembly.**
- **Synchronizer rings for 3rd and 4th are identical.**

Special tool
(B): 09913–84510

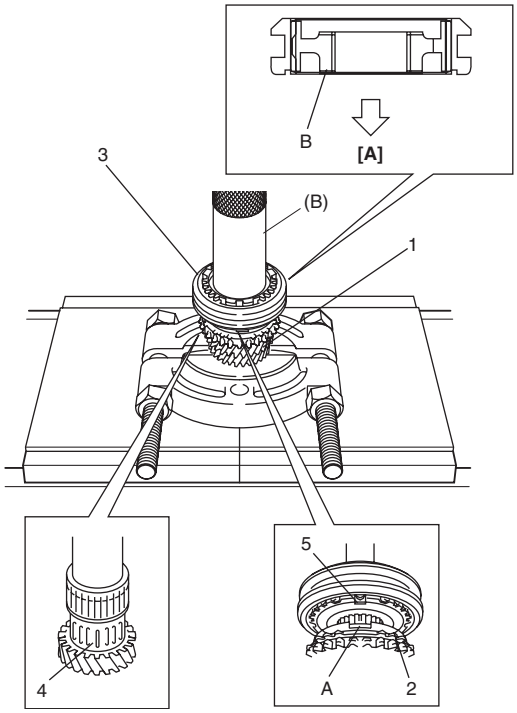

I5RW0A520034-02

[A]:	3rd gear side
A:	Key way
B:	Long boss

8) Install circlip (1) and confirm that circlip is installed in groove securely. Install needle bearing (2) of apply oil to it and then install synchronizer ring (3) and 4th gear (4).

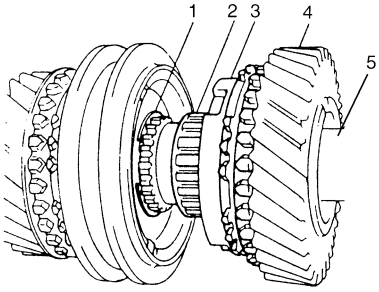

I2RH01520052-01

5.	Input shaft

9) Press-fit left bearing (2) by using special tool and hydraulic press.

Special tool
(A): 09913–80113

10) Using the same special tool at step 9), drive in 5th gear spacer (1).

⚠ CAUTION

To prevent 5th gear spacer (1) from being distorted because of excessive compression, do not press-fit it with left bearing (2) at once.

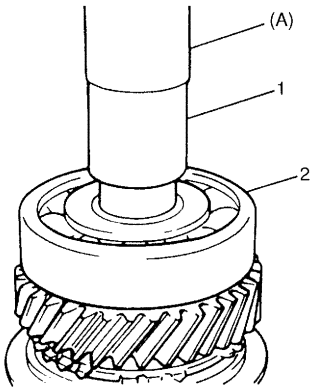

I3RH0A520020-01

Countershaft Disassembly and Reassembly

S7RW0A5206021

Disassembly

1) Drive out left bearing cone (2) with 4th gear (3) by using puller (4) and hydraulic press.

⚠ CAUTION

- **Use puller and hydraulic press that will bear at least 5 ton (11,000 lb) safely.**
- **To avoid tooth damage, support 4th gear (3) at flat side of puller.**

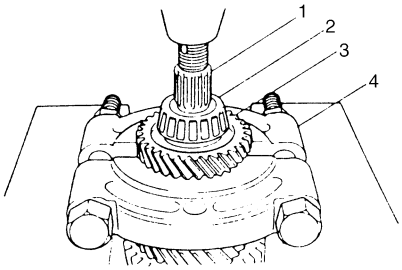

I2RH01520054-01

1. Countershaft

2) Apply puller (5) to 2nd gear (4) and drive out 3rd & 4th gear spacer (2) and 3rd gear (3) together with 2nd gear by using hydraulic press. Needle bearing would come out with 2nd gear.

⚠ CAUTION

- **If compression exceeds 5 ton (11,000 lb), release compression once, reset bearing puller and then continue press work again.**
- **To avoid gear tooth from being damaged, support it at flat side of bearing puller.**

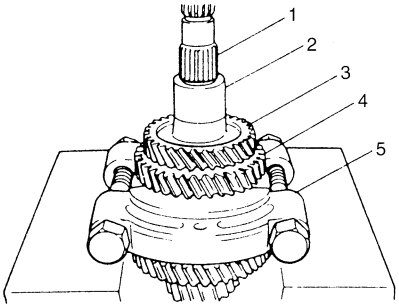

I2RH01520055-01

1. Countershaft

3) Take out 2nd synchronizer outer ring, center cone and inner ring.

4) Using special tool, remove circlip (1).

NOTE

Correct tool tips to be flat to facilitate removal of circlip.

Special tool
(A): 09900–06107

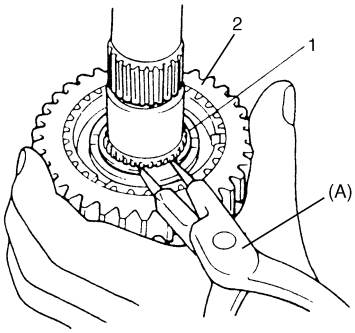

I2RH01520056-01

2. Low speed synchronizer sleeve

5) Apply puller (3) to 1st gear (2) and drive out low speed synchronizer sleeve & hub assembly (1) with 1st gear by using hydraulic press.

⚠ CAUTION

To avoid gear tooth from damage, support it at flat side of bearing puller.

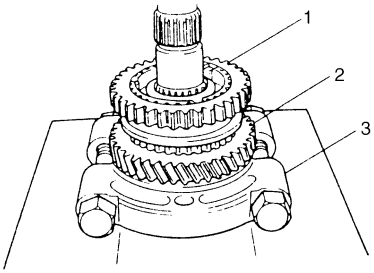

I2RH01520057-01

6) Disassemble synchronizer sleeve & hub assembly.
7) Take out 1st gear needle bearing from shaft.
8) In order to remove right bearing (1) from countershaft, grind with a grinder (2) one part “a” of right bearing (1) as illustrated till it becomes thin.

⚠ CAUTION

Be careful not to grind too far not to damage the shaft (3).

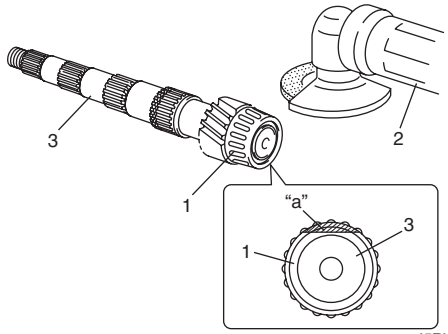

I5RW0A520035-01

9) Break with a chisel (1) the thin ground right bearing (2) and it can be removed.

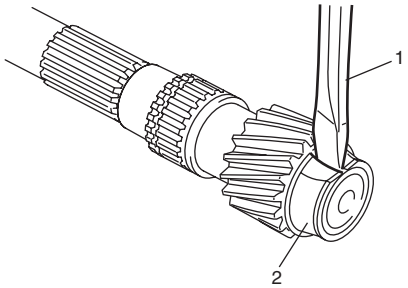

I5RW0A520036-01

Reassembly

1) Clean all components thoroughly, inspect them for any abnormality and replace with new one as necessary.
2) Check clearance “a” between synchronizer ring (2) and gear (1), key slot width “b” in synchronizer ring and each chamfered tooth of gear and synchronizer ring and replace with new one, if necessary. Also, check gear tooth.

Clearance “a” between synchronizer ring and gear
Standard: 1.0 – 1.4 mm (0.040 – 0.055 in.)
Service limit: 0.5 mm (0.020 in.)

Key slot width “b”
Standard: 10.0 – 10.2 mm (0.394 – 0.401 in.)
Limit: 10.45 mm (0.411 in.)

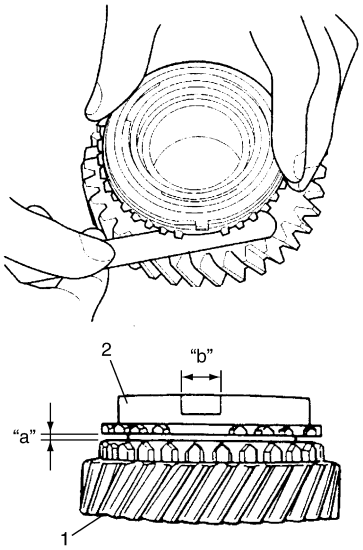

I5JB0A520079-01

3) Put the synchronizer outer ring (1), inner ring (3) and the cone (2) together and then measure the step difference between the outer ring and the inner ring. And also check each chamfered tooth of gear and synchronizer ring and replace with new one, if necessary. Also, check gear tooth.

Difference between synchronizer outer ring and inner ring (2nd)
Standard “b”: 0.95 – 1.25 mm (0.036 – 0.048 in.)
Service limit “b”: 0.5 mm (0.019 in.)

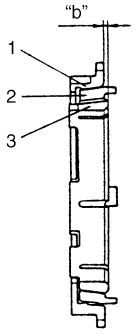

I2RH01520059-01

4) To ensure lubrication of countershaft (1), air blow oil holes (2) and make sure that they are free from any obstruction.

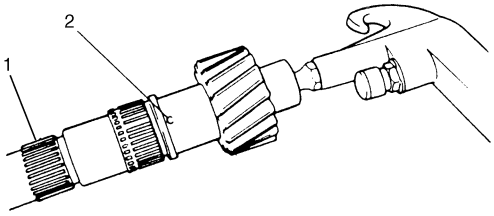

I2RH01520060-01

5) Fit low speed synchronizer sleeve (4) to hub (3), insert 3 keys (2) in it and then set springs (1) as shown in figure.

NOTE

- **No specific direction is assigned to each key but it is assigned as sleeve & hub assembly.**
- **Size of low speed synchronizer keys and springs are the larger than those of high speed one.**

Synchronizer key installation position
A = B

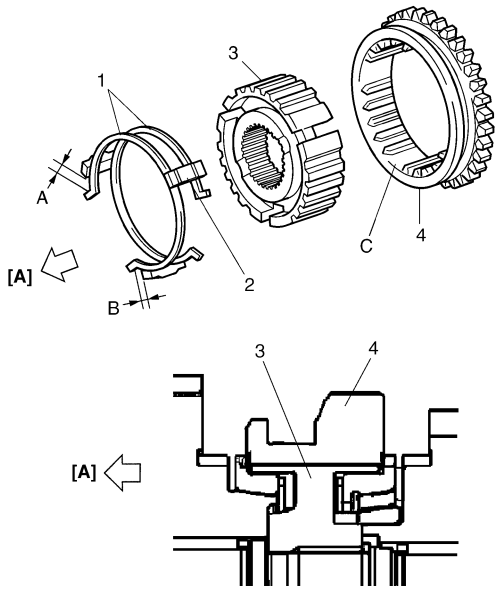

I5RW0A520037-01

[A]:	1st gear side
C:	Key way

6) Install right bearing cone (1) to counter shaft (2) by using special tools and hydraulic press.

Special tool
(A): 09913–76010
(B): 09924–07720

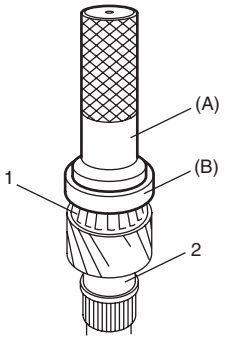

I5RW0A520038-01

7) Install needle bearing (4), apply oil to it, then install 1st gear and 1st gear synchronizer ring (2).
8) Drive in low speed sleeve & hub assembly (1) by using special tools and hammer.

NOTE

- **Support shaft with special tool as shown in figure so that retainer of bearing cone (4) will be free from compression.**
- **Make sure that synchronizer ring key slots are aligned with keys (5) while press-fitting sleeve & hub assembly.**
- **Check free rotation of 1st gear (3) after press-fitting sleeve & hub assembly.**

Special tool
(A): 09923–78210
(B): 09913–85210
(C): 09940–54910
(D): 09924–07710

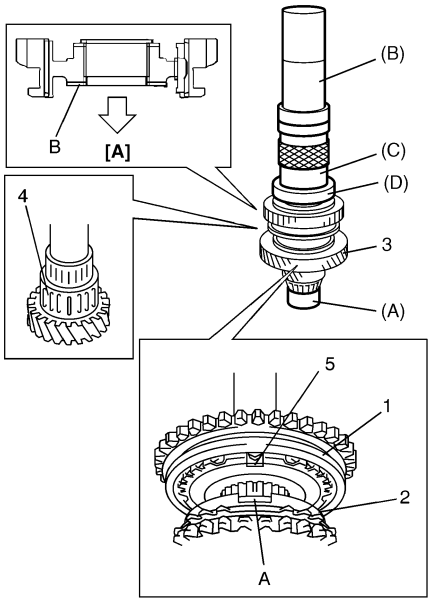

I5RW0A520039-01

[A]:	1st gear side
A:	Key slots
B:	Short flange

9) Install circlip (1) and confirm that circlip is installed in groove securely.
   Install needle bearing (2) and apply oil to needle bearing.
   With synchronizer outer ring (3), center cone (4) and inner ring (5) put together and installed to 2nd gear (6) as shown in figure.

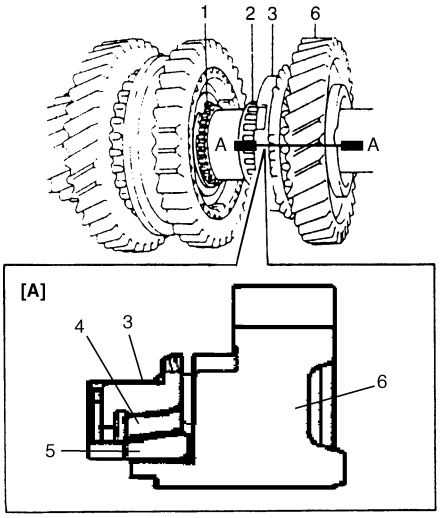

I5RW0A520040-01

[A]: Section A – A

10) Press-fit 3rd gear (2) and spacer (1) by using special tools and hydraulic press.

NOTE

It is recommended to press-fit spacer and 3rd gear first, and then 4th gear later separately so that countershaft will not be compressed excessively.

Special tool
(A): 09923–78210
(B): 09913–85210

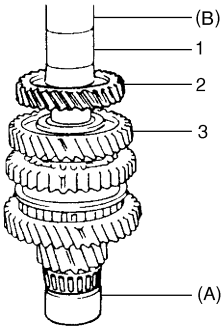

I4RH01520036-01

3. 2nd gear

11) Press-fit 4th gear (2) by using the same procedure at step 10).

12) Install left bearing cone (1) by using special tool and hydraulic press.

NOTE

For protection of bearing cone (3), always support shaft with special tool as shown in figure.

Special tool
(A): 09923–78210
(E): 09913–80113

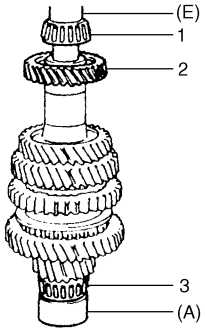

I2RH01520066-01

Gear Shift Shaft Components

S7RW0A5206022

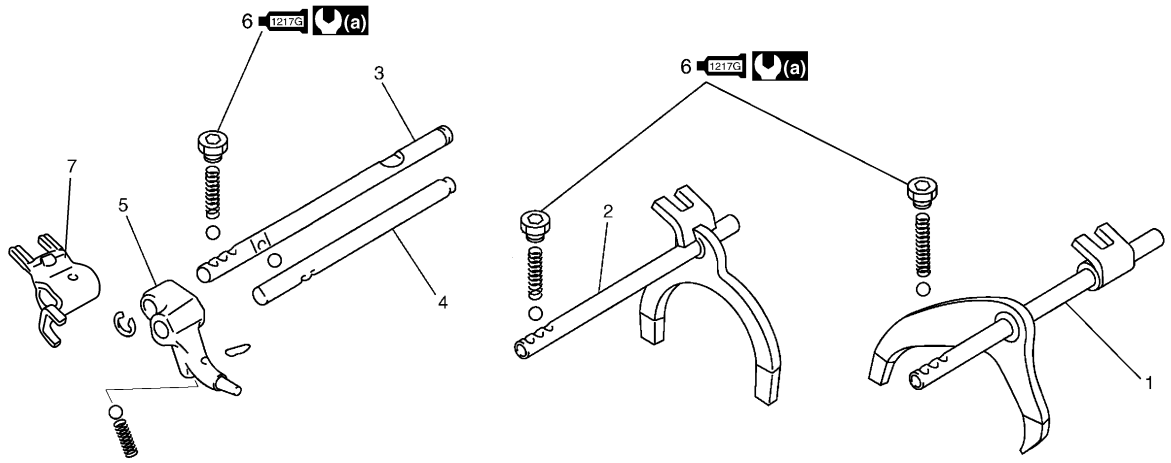

I5RW0A520041-01

1. Low speed gear shift shaft	4. 5th & reverse gear shift guide shaft	7. 5th & reverse gear shift yoke
2. High speed gear shift shaft	5. Reverse gear shift arm	(a) : 13 N·m (1.3 kgf-m, 9.5 lb-ft)
3. 5th & reverse gear shift shaft	1217G 6. Gear shift locating bolt : Apply sealant 99000-31260 to bolt thread.	

5th and Reverse Gear Shift Shafts Disassembly and Reassembly

S7RW0A5206023

Disassembly

Disassemble component parts by using special tool and hammer.

Special tool
: 09922–85811

Reassembly

Replace or correct parts as required and assemble shafts making sure that component parts are in proper order as shown in figure.

NOTE

Install 2 steel balls (3) in reverse gear shift arm (1) without fail.

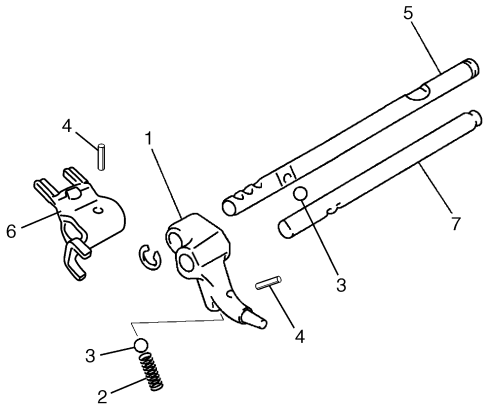

I5RW0A520042-01

2. Spring	6. 5th & reverse gear shift yoke
4. Spring pin	7. 5th & reverse gear shift guide shaft
5. 5th & reverse gear shift shaft	

Gear Shift Shaft and Fork Inspection

S7RW0A5206024

1) Using feeler gauge, check clearance between fork (1) and sleeve (2) and replace those parts if it exceeds limit of 1.0 mm (0.039 in.).

NOTE

For correct judgement of parts replacement, carefully inspect contact portion of fork and sleeve.

Clearance “a” between fork and sleeve
Service limit: 1.0 mm (0.039 in.)

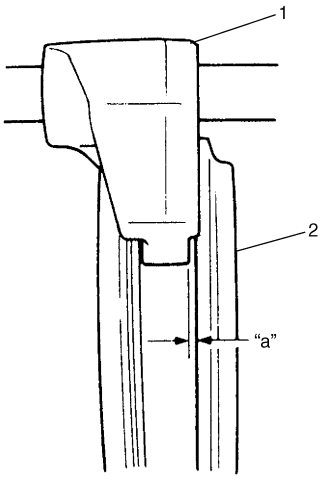

I2RH01520068-01

2) Insert each gear shift shaft into case and check that it moves smoothly. If it doesn’t, correct by using oilstone, reamer or the like.

Differential Components

S7RW0A5206025

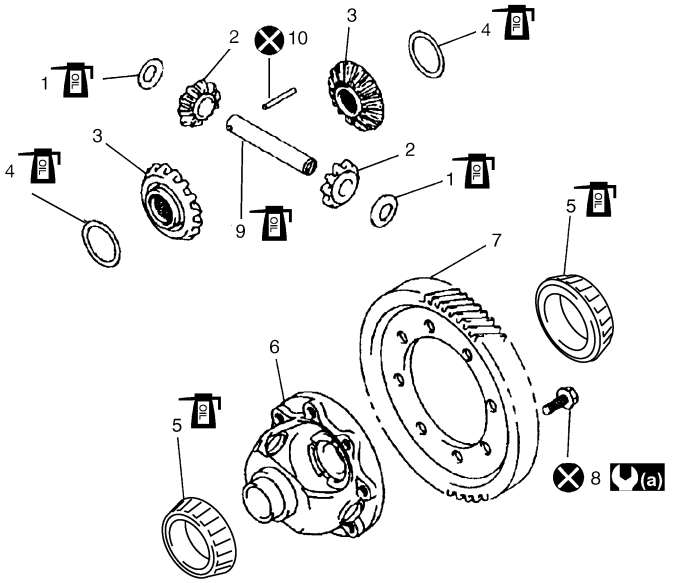

I5RW0A520043-02

1. Differential pinion washer	6. Differential case	(a) : 90 N·m (9.0 kgf-m, 65.0 lb-ft)
2. Differential pinion	7. Final gear	: Do not reuse.
3. Differential side gear	8. Final gear bolt	: Apply transaxle oil.
4. Side gear washer	9. Differential pinion shaft	
5. Differential side bearing	10. Differential pinion shaft pin	

Differential Disassembly and Reassembly

S7RW0A5206026

Disassembly

1) Using special tool, remove left bearing (1).

Special tool
(A): 09913–65135
(B): 09913–85230

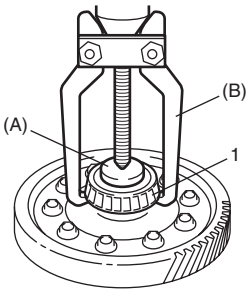

I5RW0A520044-01

2) Using special tool, remove right bearing (1).

Special tool
(A): 09913–65135
(B): 09913–85230
(C): 09940–54950

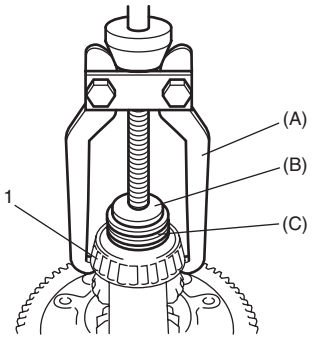

I5RW0A520045-01

3) Support differential case (1) with soft jawed vise and remove final gear bolts then take out final gear.
4) Drive out differential pinion shaft (3) pin by using special tool and hammer and then disassemble components parts.

Special tool
(A): 09922–85811

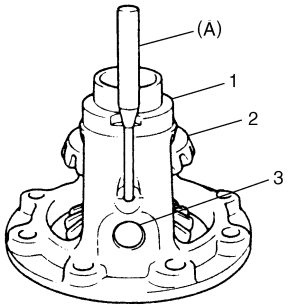

I5RW0A520046-01

2. Differential side gear

Reassembly
Judging from abnormality noted before disassembly and what is found through visual check of component parts after disassembly, prepare replacing parts and proceed to reassembly. Make sure that all parts are clean.

1) Install differential pinion, side gear and pinion shaft to differential case and measure back rash and thrust play of differential side gear as follows.
If measured value is out of specification, select suitable side gear washer from among the following available size, install it and check again.

Special tool
(A): 09900–20607
(B): 09900–20701
(C): 09952–06010

a) Differential side gear backlash
- Hold differential assembly with soft jawed vise and apply measuring tip of dial gauge to side gear as shown in figure.
- Fixing differential pinion, turn side gear back and forth and read dial gauge.

Differential side gear backlash
0.10 – 0.15 mm (0.003 – 0.005 in.)

b) Differential side gear thrust play
- Hold differential assembly with soft jawed vise and apply measuring tip of dial gauge to side gear as shown in figure.
- Move side gear up and down by hand and read dial gauge.

Differential side gear thrust play
0.03 – 0.31 mm (0.001 – 0.012 in.)

Available side gear washer thickness

0.85 mm (0.033 in.)	1.05 mm (0.041 in.)
0.9 mm (0.035 in.)	1.1 mm (0.043 in.)
0.95 mm (0.037 in.)	1.15 mm (0.045 in.)
1.0 mm (0.039 in.)	

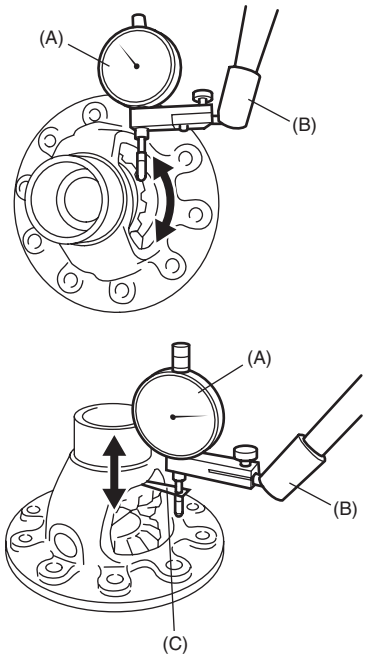

I5RW0A520047-01

2) Drive in spring pin from right side till it is flush with differential case surface.
3) Press-fit left bearing (1) by using special tool and hydraulic press.

Special tool
(A): 09913–70123

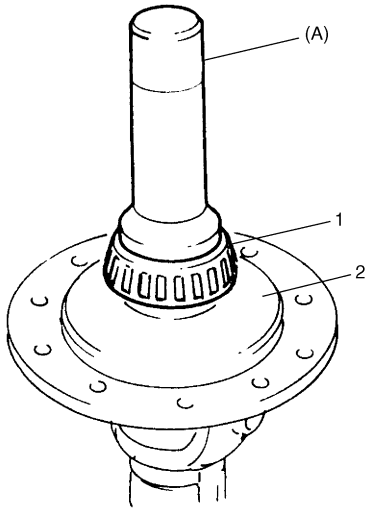

I2RH01520074-01

2. Differential case

4) Press-fit right bearing (1) by using special tools and hydraulic press.

Special tool
(A): 09925–15410
(B): 09924–07720
(C): 09913–85230

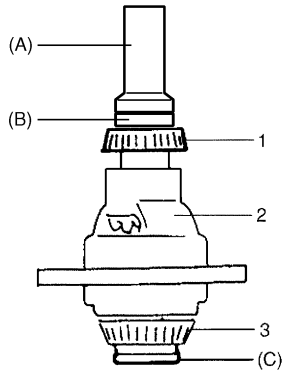

I5RW0A520048-01

2.	Differential case
3.	Differential side left bearing

5) Hold differential assembly with soft jawed vise (3), install final gear (2) and then tighten new final gear bolts (1).

⚠ CAUTION

Use of any other bolts than specified ones is prohibited. Otherwise, bolts may loosen.

Tightening torque
Final gear bolt (a): 90 N·m (9.0 kgf-m, 65.0 lb-ft)

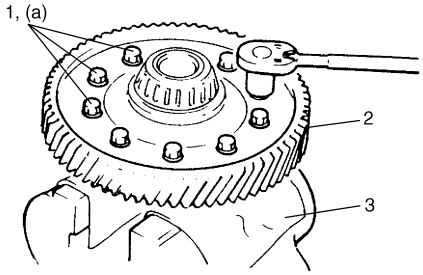

I5RW0A520049-01

Specifications

Tightening Torque Specifications

S7RW0A5207001

Fastening part	Tightening torque			Note
	N·m	kgf-m	lb-ft	
Transaxle oil level / filler plug	21	2.1	15.5	☞ / ☞
Transaxle oil drain plug	21	2.1	15.5	☞
Back up light switch	23	2.3	17.0	☞
Guide case bolt No.1	23	2.3	17.0	☞
Guide case bolt No.2	23	2.3	17.0	☞
Gear shift interlock bolt	23	2.3	17.0	☞
5th to reverse interlock guide bolt	23	2.3	17.0	☞
Countershaft nut	100	10.0	75.0	☞
Shift fork shaft bolt	10	1.0	7.5	☞
Side cover bolt	10	1.0	7.5	☞
Reverse gear shift lever bolt	23	2.3	17.0	☞
Transaxle case bolt	23	2.3	17.0	☞
Reverse shaft bolt	23	2.3	17.0	☞
Gear shift locating bolt	13	1.3	9.5	☞
Left case plate bolt	23	2.3	17.0	☞
Oil gutter bolt	10	1.0	7.5	☞
Final gear bolt	90	9.0	65.0	☞

NOTE

The specified tightening torque is also described in the following.
“Gear Shift Control Lever and Cable Components”
“Manual Transaxle Unit Components”
“Gear Shift and Select Shaft Assembly Components”
“Manual Transaxle Assembly Components”
“Gear Shift Shaft Components”
“Differential Components”

Reference:
For the tightening torque of fastener not specified in this section, refer to “Fasteners Information in Section 0A”.

Special Tools and Equipment

Recommended Service Material

S7RW0A5208001

Material	SUZUKI recommended product or Specification		Note
Grease	SUZUKI Super Grease A	P/No.: 99000–25011	☞ / ☞ / ☞
Sealant	SUZUKI Bond No.1217G	P/No.: 99000–31260	☞ / ☞ / ☞ / ☞ / ☞ / ☞ / ☞ / ☞ / ☞ / ☞
Thread lock cement	Thread Lock Cement Super 1322	P/No.: 99000–32110	☞ / ☞ / ☞ / ☞ / ☞

NOTE

Required service material is also described in the following.
“Gear Shift Control Lever and Cable Components”
“Gear Shift and Select Shaft Assembly Components”
“Manual Transaxle Assembly Components”
“Input Shaft and Countershaft Components”
“Gear Shift Shaft Components”
“Differential Components”

Special Tool

S7RW0A5208002

09900–06107 Snap ring pliers (opening type) ☞ / ☞ / ☞ / ☞ / ☞ / ☞ 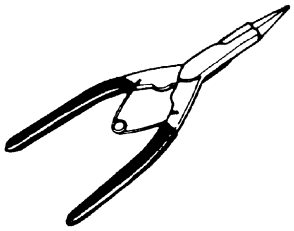	09900–20607 Dial gauge ☞ 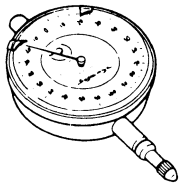
09900–20701 Magnetic stand ☞ 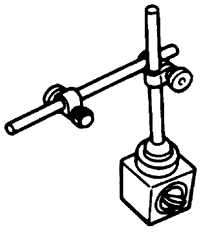	09913–50121 Oil seal remover ☞ 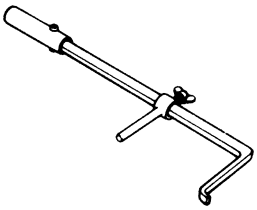
09913–65135 Bearing puller ☞ / ☞ 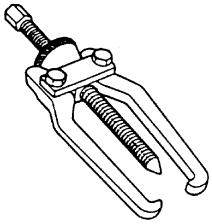	09913–70123 Bearing installing tool ☞ / ☞ 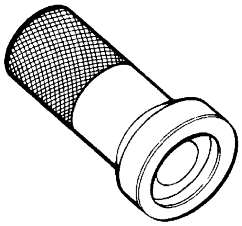
09913–75510 Bearing installer ☞ 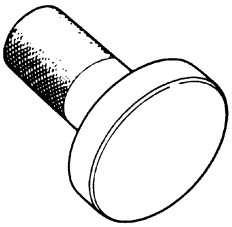	09913–75810 Bearing installer ☞ 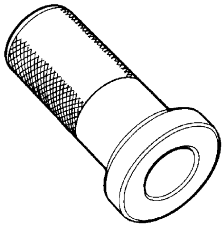
09913–75821 Bearing installer attachment ☞ 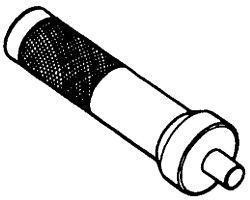	09913–75830 Steering pinion bush installer ☞ 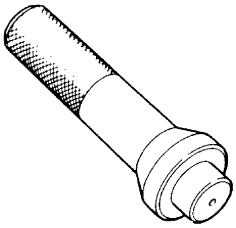

09913–76010 Bearing installer ☞ / ☞	09913–80113 Bearing installer ☞ / ☞ / ☞
09913–84510 Bearing installer ☞	09913–85210 Bearing installer ☞ / ☞
09913–85230 Bearing remover tool ☞ / ☞ / ☞	09922–85811 Spring pin remover (4.5 mm) ☞ / ☞ / ☞
09923–78210 Bearing installer ☞ / ☞ / ☞	09924–07710 Synchronizer hub installer ☞
09924–07720 Synchronizer hub installer ☞ / ☞	09924–74510 Bearing and oil seal handle ☞
09924–84510–004 Bearing installer attachment ☞	09925–14520 Bearing and oil seal installer (80 x 50 mm) ☞
09925–15410 Oil seal installer ☞	09925–78210 Spring pin remover (6 mm) ☞
09927–76060 Gear holder ☞ / ☞	09930–30104 Sliding shaft ☞

09940–54910 Front fork oil seal install driver ☞ 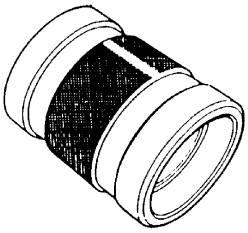	09940–54950 Bearing installer attachment ☞ 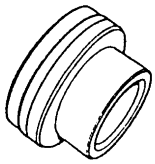
09941–64511 Bearing and oil seal remover (30 mm Min.) ☞ 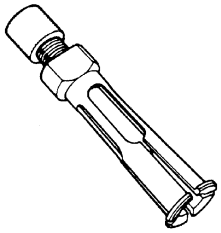	09942–15511 Sliding hammer ☞ 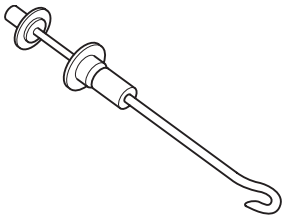
09944–96011 Bearing outer race remover ☞ 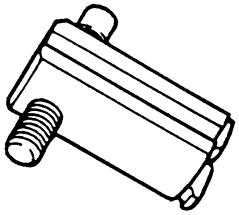	09952–06010 Dial gauge plate No.1 ☞

Clutch

General Description

Clutch (Hydraulic Type) Construction

S7RW0A5301001

The clutch is a diaphragm spring clutch of a dry single disc type. The diaphragm spring is of a tapering-finger type, which is a solid ring in the outer diameter part, with a series of tapered fingers pointing inward.
The disc, carrying four torsional coil springs, is positioned on the transaxle input shaft with an involute spline fit.
The clutch cover is secured to the flywheel, and carries the diaphragm spring in such a way that the peripheral edge part of the spring pushes on the pressure plate against the flywheel (with the disc in between), when the clutch release bearing (incorporated in clutch operating cylinder) is held back. This is the engaged condition of the clutch.
Depressing the clutch pedal causes the release bearing (incorporated in clutch operating cylinder) to advance and pushes on the tips of the tapered fingers of the diaphragm spring. When this happens, the diaphragm spring pulls the pressure plate away from the flywheel, thereby interrupting the flow of drive from flywheel through clutch disc to transaxle input shaft. Clutch fluid is supplied from brake fluid reservoir. Clutch fluid level can be checked by brake fluid level of brake fluid reservoir.

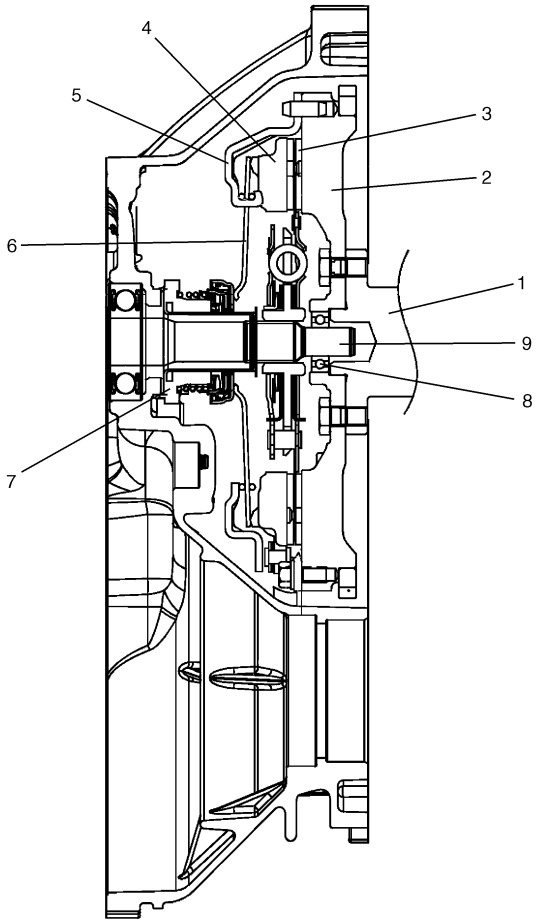

I5RW0A530001-01

1. Crankshaft	4. Pressure plate	7. Operating cylinder assembly
2. Flywheel	5. Clutch cover	8. Input shaft bearing
3. Clutch disc	6. Diaphragm spring	9. Input shaft

Diagnostic Information and Procedures

Clutch System Symptom Diagnosis

S7RW0A5304001

Condition	Possible cause	Correction / Reference Item
Slipping	Improper clutch pedal free travel	*Bleed air or replace master cylinder.*
	Worn or oily clutch disc facing	*Replace disc.*
	Warped disc, pressure plate or flywheel surface	*Replace disc, clutch cover or flywheel.*
	Weakened diaphragm spring	*Replace clutch cover.*
	Master cylinder piston or seal cup not returning	*Replace master cylinder.*
Dragging clutch	Improper clutch pedal free travel	*Bleed air or replace master cylinder.*
	Weakened diaphragm spring, or worn spring tip	*Replace clutch cover.*
	Rusted input shaft splines	*Lubricate.*
	Damaged or worn splines of transaxle input shaft	*Replace input shaft.*
	Excessively wobbly clutch disc	*Replace disc.*
	Clutch facings broken or dirty with oil	*Replace disc.*
	Fluid leakage	*Repair or replace.*
Clutch vibration	Glazed (glass-like) clutch facings	*Repair or replace disc.*
	Clutch facings dirty with oil	*Replace disc.*
	Release bearing slides unsmoothly	*Replace clutch operating cylinder assembly.*
	Wobbly clutch disc, or poor facing contact	*Replace disc.*
	Weakened torsion springs in clutch disc	*Replace disc.*
	Clutch disc rivets loose	*Replace disc.*
	Distorted pressure plate or flywheel surface	*Replace clutch cover or flywheel.*
	Weakened engine mounting	*Replace engine mounting.*
	Loosened engine mounting bolt or nut	*Retighten engine mounting bolt or nut.*
Noisy clutch	Worn or broken release bearing	*Replace clutch operating cylinder assembly.*
	Input shaft front bearing worn down	*Replace input shaft bearing.*
	Excessive rattle of clutch disc hub	*Replace disc.*
	Cracked clutch disc	*Replace disc.*
	Pressure plate and diaphragm spring rattling	*Replace clutch cover.*
Grabbing clutch	Clutch disc facings soaked with oil	*Replace disc.*
	Clutch disc facings excessively worn	*Replace disc.*
	Rivet heads showing out of facing	*Replace disc.*
	Weakened torsion springs	*Replace disc.*

Repair Instructions

Clutch Pedal Inspection

S7RW0A5306001

Cylinder Push Rod Play “a”

1) Press clutch pedal (1) gradually with finger, stop when slight increase of resistance is felt and measure how much pedal has moved (push rod play) as represented by “a” as shown.

   Push rod play
   “a”: Max. 3 mm (0.12 in.)

2) If “a” is not within specification, replace master cylinder (3) or pedal arm (2).

Clutch Pedal Free Travel “b”

1) Depress clutch pedal (1), stop the moment clutch resistance is felt, and measure how much pedal has moved (clutch pedal free travel) as represented by “b” in the figure.

   Clutch pedal free travel “b”
   : 2 – 8 mm (0.08 – 0.31 in.)

2) If “b” is not within specification, check pedal arm (2) and master cylinder (3) and replace defective part.

Clutch Release Margin “c”

1) Pull up parking brake fully and block wheels.
2) Start engine and keep engine at idle with neutral gear position.
3) Without clutch pedal (1) depressed, slightly push the shift lever to reverse position until transaxle emits gear contact noise. Do not shift the lever to reverse position.
4) With emitting gear contact noise, be slow to depress clutch pedal (1), and at gear contact noise died position (release point) stop depressing.
5) Measure distance between release point (4) and full stroke point (5) on clutch pedal (1) which is shown by “c” in the figure.

   Clutch release margin
   “c”: 25 – 55 mm (0.98 – 2.17 in.)

6) If “c” is not within specification, it is possible that air is trapped in this system. If suspected so, bleed air referring to “Air Bleeding of Clutch System”.Upon completion of above inspection, start engine and check clutch for proper operation.

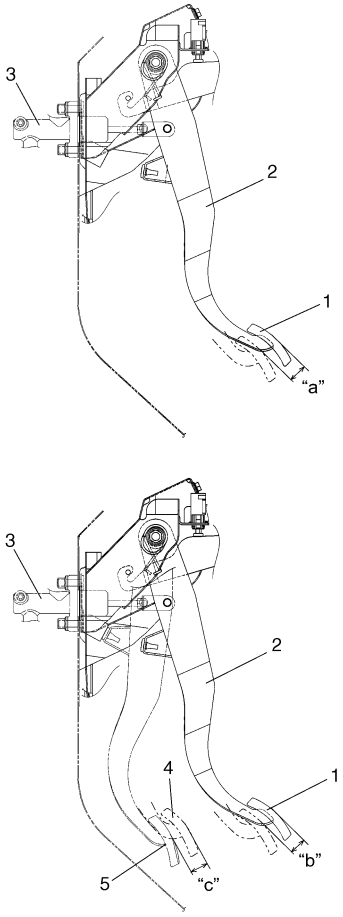

I5RW0A530002-01

Clutch Fluid Level Inspection

S7RW0A5306002

Refer to “Brake Fluid Level Inspection in Section 4A”.

Clutch fluid specification
: Refer to the reservoir cap of the brake master cylinder.

Air Bleeding of Clutch System

S7RW0A5306003

⚠ CAUTION

When operating the pedal stroke for air bleeding of clutch system, after releasing the clutch pedal, be sure to wait 1 second or more before depressing it again. Otherwise, the oil seal of operating cylinder will be damaged, resulting in oil leakage.

Bleed air from clutch system.
Refer to “Air Bleeding of Brake System in Section 4A”.

Clutch Fluid Pipe and Hose Components

S7RW0A5306004

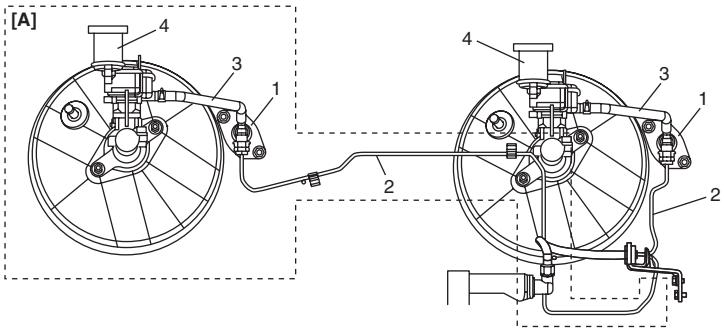

I5RW0A530003-02

[A]: RH steering vehicle	3. Clutch reservoir hose
1. Clutch master cylinder	4. Brake master cylinder reservoir
2. Clutch fluid pipe	

Clutch Fluid Pipe Removal and Installation

S7RW0A5306005

Removal

⚠ CAUTION

Do not allow fluid to get on painted surface. It may cause painted surface damage.

1) Remove dust and dirt from each joint of pipe to be disconnected and clean around brake master cylinder reservoir cap.
2) Take out fluid with syringe or such from brake master cylinder reservoir.
3) Pull clamp (1) of clutch master cylinder (3) and pull clamp (5) of fluid pipe joint (4), and then disconnect clutch fluid pipe (2).
4) Pull clamp (6) of damper (7), and then disconnect damper (7) from clutch fluid pipe (2).

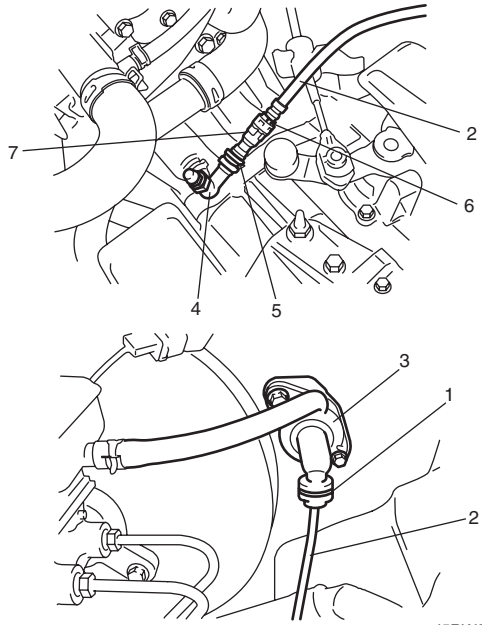

I5RW0B530002-03

Installation

Reverse removal procedure for installation noting the following.

⚠ CAUTION

- **Do not allow fluid to get on painted surface.**
- **Do not allow pipe to contact hard against vehicle body or other parts.**

- Install each clamp securely.
- After installation, check clutch pedal free travel and bleed air from clutch system referring to “Clutch Pedal Inspection” and “Air Bleeding of Clutch System”.
- Check fluid leakage.
- Add fluid to MAX level of reservoir.

Clutch Fluid Pipe Inspection

S7RW0A5306006

Check pipe (1) for damage, dirt and leak. Replace if check result is not satisfactory.

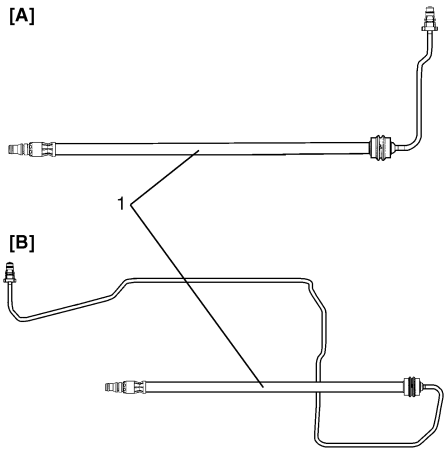

I5RW0A530005-01

[A]: LH steering vehicle
[B]: RH steering vehicle

Clutch Master Cylinder Removal and Installation

S7RW0A5306007

Removal

1) Clean around brake master cylinder reservoir cap and take out fluid with syringe or such from brake master cylinder reservoir.
2) Disconnect clutch fluid pipe (4) from clutch master cylinder (1) referring to “Clutch Fluid Pipe Removal and Installation”.
3) Disconnect clutch reservoir hose (2).
4) Remove push rod from clutch pedal, and then remove clutch master cylinder.

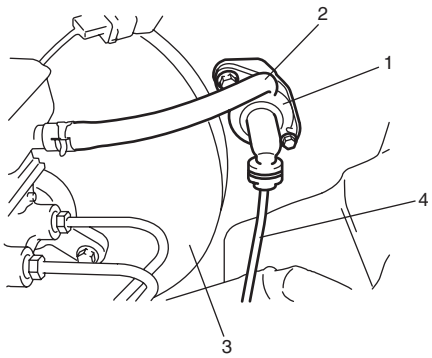

I5RW0A530006-01

3. Brake booster

Installation

Reverse removal procedure for installation noting the following.

- Apply grease to push rod tip.

  “A”: Grease 99000–25100 (SUZUKI Silicone Grease)

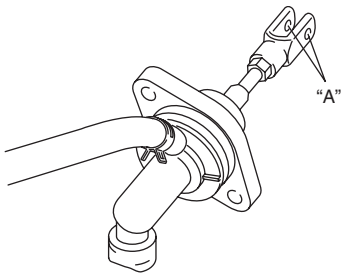

I5RW0A530007-01

- Tighten clutch master cylinder nut to specified torque.

  Tightening torque
  Clutch master cylinder nut: 13 N·m (1.3 kgf-m, 9.5 lb-ft)

Clutch Operating Cylinder Assembly Removal and Installation

S7RW0A5306008

⚠ CAUTION

- **Do not allow fluid to get on painted surfaces. It may cause painted surface damage.**
- **Do not disassemble clutch operating cylinder assembly.**

Removal

1) Clean around reservoir cap of brake master cylinder and take out fluid with syringe or such.
2) Dismount transaxle assembly referring to “Manual Transaxle Unit Dismounting and Remounting in Section 5B”.
3) Loosen clutch fluid pipe flare nut (1) of clutch operating cylinder assembly (2).
4) Remove clutch pipe joint sleeve (3) from transaxle and then remove clutch fluid pipe (4).
5) Remove clutch operating cylinder assembly from transaxle.

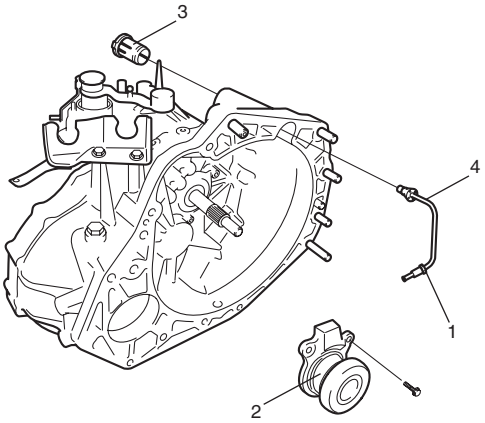

I5RW0A530008-01

Installation

1) Install clutch operating cylinder assembly (2) to transaxle. Tighten new mounting bolts to specified torque.

   Tightening torque
   Clutch operating cylinder assembly mounting bolt (a): 10 N·m (1.0 kgf-m, 7.5 lb-ft)

2) Connect clutch fluid pipe (4) to clutch operating cylinder assembly temporarily.
3) Install clutch pipe joint sleeve (3) to transaxle securely and then tighten clutch fluid pipe flare nut (1) to specified torque.

   Tightening torque
   Clutch fluid pipe flare nut (b): 16 N·m (1.6 kgf-m, 11.5 lb-ft)

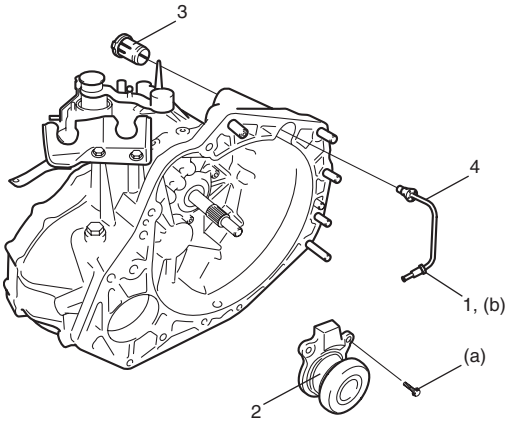

I5RW0A530009-01

4) Remount transaxle assembly referring to “Manual Transaxle Unit Dismounting and Remounting in Section 5B”.
5) Bleed air from system and check clutch pedal free travel. Refer to “Air Bleeding of Clutch System” and “Clutch Pedal Inspection”.

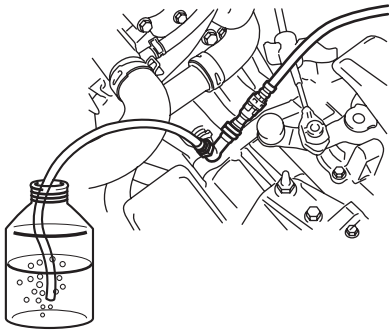

I5RW0B530005-03

Clutch Operating Cylinder Assembly Inspection

S7RW0A5306009

Check clutch fluid leakage, spring for damage and bearing for smooth rotation. If malfunction is found, replace clutch operating cylinder assembly.

Clutch Cover, Clutch Disc and Flywheel Components

S7RW0A5306010

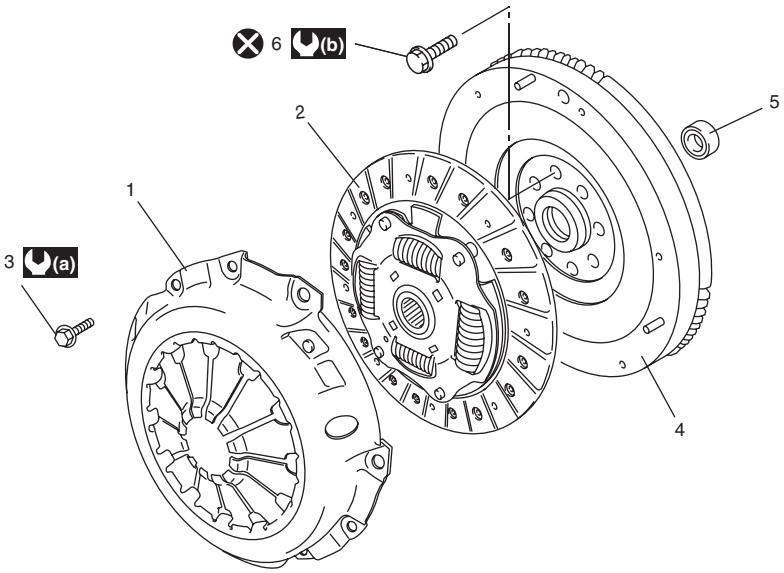

I6RW0C530001-01

1. Clutch cover	4. Flywheel	(a) : 23 N·m (2.3 kgf-m, 17.0 lb-ft)
2. Clutch disc	5. Input shaft bearing	(b) : 70 N·m (7.0 kgf-m, 51.0 lb-ft)
3. Clutch cover bolt	6. Flywheel bolt	⊗ : Do not reuse.

Clutch Cover, Clutch Disc and Flywheel Removal and Installation

S7RW0A5306011

Removal

1) Dismount manual transaxle assembly referring to “Manual Transaxle Unit Dismounting and Remounting in Section 5B”.
2) Hold flywheel with special tool and remove clutch cover bolts (1), clutch cover (2) and clutch disc.

Special tool
(A): 09924–17811

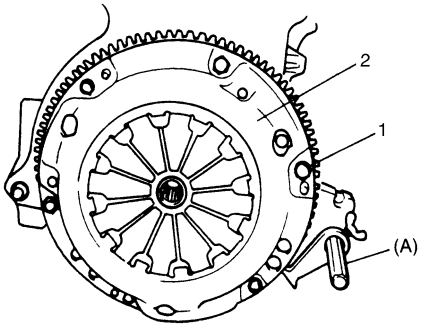

I4RS0A530014-01

3) Pull out input shaft bearing (1) from flywheel (2), use the following special tool if necessary.

Special tool
(A): 09921–26020
(B): 09930–30104

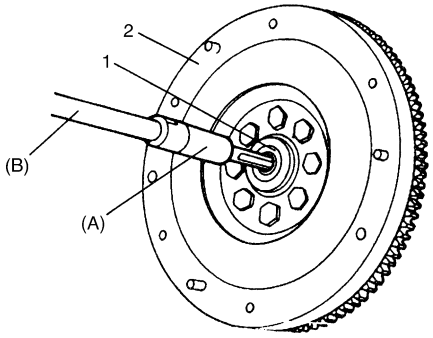

I2RH01530023-01

4) Remove flywheel (1) from crankshaft using special tool.

Special tool
(A): 09924–17810

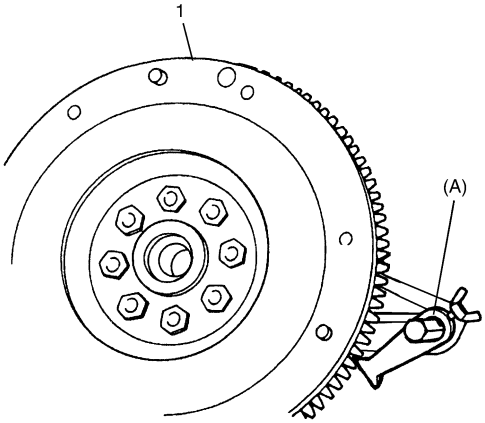

I4RS0A530015-02

Installation

NOTE

Before assembling, make sure that flywheel surface and pressure plate surface have been cleaned and dried thoroughly.

1) Install flywheel (2) to crankshaft and tighten new bolts (1) to specification.

Special tool
(A): 09924–17810

Tightening torque
Flywheel bolt (a): 70 N·m (7.0 kgf-m, 51.0 lb-ft)

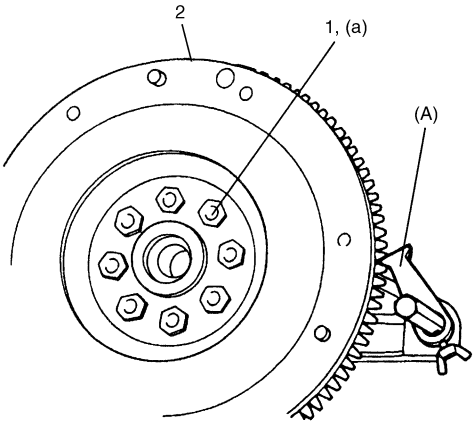

I2RH01530024-01

2) Using special tool, install input shaft bearing to flywheel (1).

Special tool
(B): 09925–98210

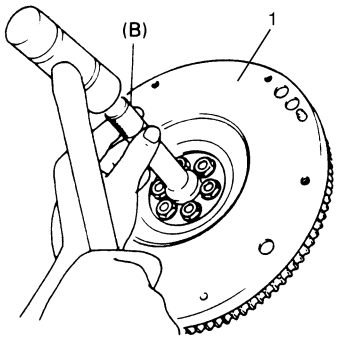

I4RS0A530016-01

3) Aligning clutch disc to flywheel center using special tool, install clutch cover (1) and bolts (2). Then tighten bolts (2) to specification.

NOTE

- **While tightening clutch cover bolts, compress clutch disc with special tool (clutch center guide) by hand so that disc is centered.**
- **Tighten cover bolts little by little evenly in diagonal order.**

Special tool
(A): 09924–17811
(B): 09923–36320

Tightening torque
Clutch cover bolt (a): 23 N·m (2.3 kgf-m, 17.0 lb-ft)

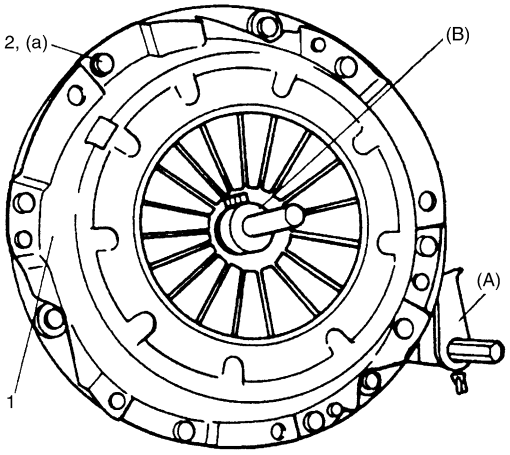

I4RS0A530017-01

4) Slightly apply grease to input shaft (1), then join manual transaxle assembly with engine referring to “Manual Transaxle Unit Dismounting and Remounting in Section 5B”.

“A”: Grease 99000–25210 (SUZUKI Super Grease I)

NOTE

When inserting transaxle input shaft to clutch disc, turn crankshaft little by little to match the splines.

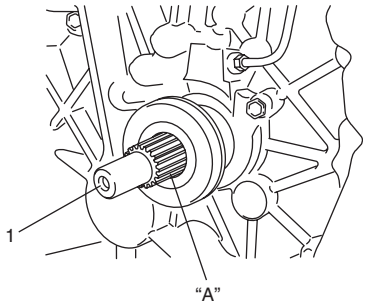

I5RW0A530013-01

Clutch Cover, Clutch Disc and Flywheel Inspection

S7RW0A5306012

Input Shaft Bearing
Check bearing (1) for smooth rotation and replace it if abnormality is found.

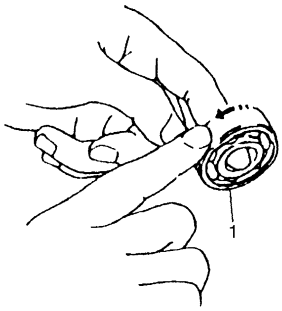

I3RM0A530014-01

Clutch Disc

Measure depth of rivet head depression, i.e. distance between rivet head and facing surface.
If depression is found to have reached service limit at any of rivet holes (2), replace clutch disc assembly (1).

Rivet head depth
Standard: 1.65 – 2.25 mm (0.06 – 0.09 in.)
Limit: 0.5 mm (0.02 in.)

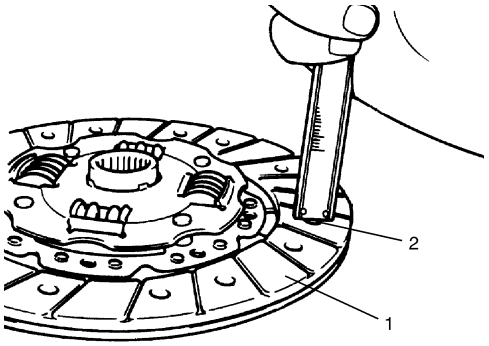

I4RS0A530019-01

Clutch Cover

1) Check diaphragm spring (1) for abnormal wear or damage.
2) Inspect pressure plate (2) for wear or heat spots.
3) If abnormality is found, replace clutch cover.
   Do not disassemble it into diaphragm spring and pressure plate.

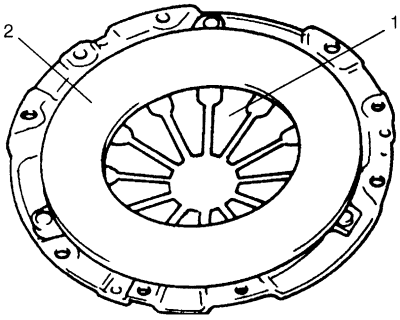

I3RM0A530015-01

Flywheel

Check surface contacting clutch disc for abnormal wear or heat spots. Replace or repair as required.

Specifications

Tightening Torque Specifications

S7RW0A5307001

Fastening part	Tightening torque			Note
	N·m	kgf-m	lb-ft	
Clutch master cylinder nut	13	1.3	9.5	☞
Clutch operating cylinder assembly mounting bolt	10	1.0	7.5	☞
Clutch fluid pipe flare nut	16	1.6	11.5	☞
Flywheel bolt	70	7.0	51.0	☞
Clutch cover bolt	23	2.3	17.0	☞

NOTE

The specified tightening torque is also described in the following.
“Clutch Cover, Clutch Disc and Flywheel Components”

Reference:
For the tightening torque of fastener not specified in this section, refer to “Fasteners Information in Section 0A”.

Special Tools and Equipment

Recommended Service Material

S7RW0A5308001

Material	SUZUKI recommended product or Specification		Note
Grease	SUZUKI Silicone Grease	P/No.: 99000–25100	☞
	SUZUKI Super Grease I	P/No.: 99000–25210	☞

Special Tool

S7RW0A5308002

09921–26020 Bearing remover ☞ 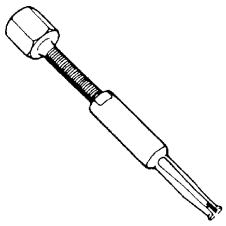	09923–36320 Clutch center guide (15 mm) ☞ 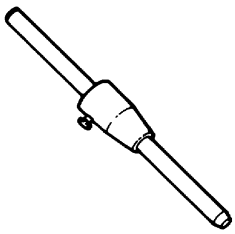
09924–17810 Flywheel holder (drive plate stopper) ☞ / ☞ 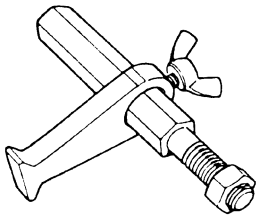	09924–17811 Flywheel holder ☞ / ☞ 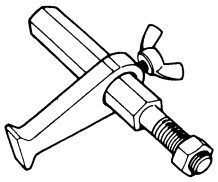
09925–98210 Input shaft bearing installer ☞ 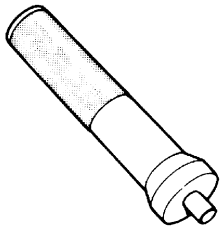	09930–30104 Sliding shaft ☞ 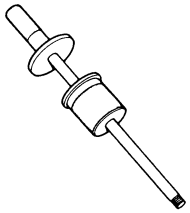

Section 6

Steering

CONTENTS

Precautions 6-1
Precautions 6-1
Precautions on Steering 6-1

Steering General Diagnosis 6A-1
Precautions 6A-1
Precautions for Steering Diagnosis 6A-1
Diagnostic Information and Procedures 6A-1
Steering Symptom Diagnosis 6A-1
Steering System Inspection 6A-2

Steering Wheel and Column 6B-1
Precautions 6B-1
Service Precautions of Steering Wheel and Column 6B-1
General Description 6B-1
Steering Wheel and Column Construction 6B-1
Diagnostic Information and Procedures 6B-2
Checking Steering Column for Accident Damage 6B-2
Repair Instructions 6B-3
Steering Wheel and Column Components 6B-3
Steering Wheel Removal and Installation 6B-4
Contact Coil Cable Assembly Removal and Installation 6B-5
Centering Contact Coil Cable Assembly 6B-6
Contact Coil Cable Assembly Inspection 6B-6
Steering Angle Sensor Removal and Installation (ESP® model) 6B-6
Steering Angle Sensor Inspection (ESP® model) 6B-7
Steering Column Removal and Installation 6B-7
Steering Column Inspection 6B-8
Ignition Switch Cylinder Assembly Removal and Installation (Non- Keyless Start Model) 6B-9
Steering Lock Assembly (Ignition Switch) Removal and Installation 6B-9
Steering Lower Shaft Removal and Installation 6B-10
Specifications 6B-11
Tightening Torque Specifications 6B-11
Special Tools and Equipment 6B-11
Special Tool 6B-11

Power Assisted Steering System 6C-1
Precautions 6C-1
P/S System Note 6C-1
Precautions in Diagnosing Troubles 6C-1
General Description 6C-2
P/S System Description 6C-2
EPS Diagnosis General Description 6C-3
On-Board Diagnostic System Description 6C-3
Schematic and Routing Diagram 6C-4
EPS System Wiring Circuit Diagram 6C-4
Diagnostic Information and Procedures 6C-5
EPS System Check 6C-5
“EPS” Warning Light Check 6C-8
DTC Check 6C-8
DTC Clearance 6C-9
DTC Table 6C-9
Visual Inspection 6C-11
Scan Tool Data 6C-12
P/S System Symptom Diagnosis 6C-13
DLC and Its Communication Check (No communication to P/S Control Module) 6C-14
“EPS” Warning Light Does Not Come ON with Ignition Switch Turned ON before Engine Starts 6C-16
“EPS” Warning Light Remains ON Steady after Engine Starts 6C-18
DTC C1111 / C1113 / C1115: Torque Sensor Circuit Failure 6C-19
DTC C1116: Steering Torque Sensor Power Supply Circuit 6C-21
DTC C1121 / C1123 / C1124: Vehicle Speed Signal Circuit Failure 6C-22
DTC C1122: Engine Speed Signal 6C-24
DTC C1141 / C1142 / C1143 / C1145: Motor Circuit Failure 6C-26
DTC C1153: P/S Control Module Power Supply Circuit 6C-27
DTC C1155: P/S Control Module Internal Failure 6C-28
P/S Control Module Power Supply and Ground Circuit Check 6C-29
Inspection of P/S Control Module and Its Circuits 6C-30
Steering Wheel Play Check 6C-34
Steering Force Check 6C-34

Repair Instructions 6C-35
Steering Gear Case Assembly Components 6C-35
Tie-Rod End Boot On-Vehicle Inspection 6C-36
Tie-Rod End Removal and Installation.....6C-36
Tie-Rod End Initial Position Setting.....6C-37
Tie-Rod End Inspection.....6C-37
Steering Shaft Joint On-Vehicle Inspection.....6C-37
Steering Gear Case Assembly Removal and Installation 6C-38
Steering Rack Boot Inspection.....6C-39
Tie-Rod / Rack Boot Removal and Installation ..6C-39
Steering Rack Plunger Removal and Installation 6C-40
Steering Rack Plunger Inspection.....6C-41
P/S Control Module Removal and Installation...6C-41
Torque Sensor and Its Circuit Inspection 6C-42
P/S Motor and Its Circuit Inspection.....6C-43
Specifications 6C-44
Tightening Torque Specifications.....6C-44
Special Tools and Equipment 6C-44
Recommended Service Material 6C-44
Special Tool 6C-44

Precautions

Precautions

Precautions on Steering

S7RW0A6000001

Air Bag Warning
Refer to “Air Bag System Service Warning in Section 00”.

Precautions for Steering Diagnosis
Refer to “Precautions for Steering Diagnosis in Section 6A”.

Service Precautions of Steering Wheel and Column
Refer to “Service Precautions of Steering Wheel and Column in Section 6B”.

P/S System Note
Refer to “P/S System Note in Section 6C”.

Steering General Diagnosis

Precautions

Precautions for Steering Diagnosis

S7RW0A6100001

Since the problems in steering involve several systems, they must all be considered when diagnosing a complaint. To avoid using the wrong symptom, always road test the vehicle first. Proceed with the following preliminary inspection and correct any defects which are found.

1) Inspect tires for proper pressure and uneven wear.
2) Raise vehicle on a hoist and inspect steering system for loose or damaged parts.
3) Spin front wheels. Inspect for out-of-round tires, out-of-balance tires, bent rims, loosen and/or rough wheel bearings.

Diagnostic Information and Procedures

Steering Symptom Diagnosis

S7RW0A6104001

Condition	Possible cause	Correction / Reference Item
Hard steering	Tire not adequately inflated	*Inflate tires to proper pressure.*
	Malfunction of power steering system	*Check and correct. Refer to "P/S System Symptom Diagnosis in Section 6C".*
	Bind in tie-rod end ball studs or lower ball joints	*Replace tie-rod end or front suspension control arm.*
	Disturbed front wheel alignment	*Check and adjust front wheel alignment.*
	Bind in steering column	*Repair or replace steering column assembly.*
	Rack and pinion adjustment	*Check and adjustment rack and pinion torque.*
Too much play in steering	Wheel bearings worn	*Replace wheel bearing.*
	Loose steering gear case bolts	*Tighten gear case bolts.*
	Faulty steering gear case assembly	*Replace steering gear case assembly.*
	Worn steering shaft joints	*Replace steering lower shaft assembly.*
	Worn tie-rod ends or tie-rod inside ball joints	*Replace tie-rod end or tie-rod.*
	Worn lower ball joints	*Replace front suspension control arm.*
	Rack and pinion adjustment	*Check and adjustment rack and pinion torque.*
Poor return ability	Bind in tie-rod end ball studs	*Replace tie-rod end.*
	Bind in ball joints	*Replace front suspension control arm.*
	Bind in steering column	*Replace steering column assembly.*
	Disturbed front end alignment	*Check and adjust front end alignment.*
	Faulty steering gear case assembly	*Replace steering gear case assembly.*
	Tires not adequately inflated	*Adjust tire pressure.*
	Rack and pinion adjustment	*Check and adjustment rack and pinion torque.*
Rack and pinion noise (Rattle or chuckle)	Loose steering gear case bolts	*Tighten steering gear case bolts.*
	Rack and pinion adjustment	*Check and adjustment rack and pinion torque.*
	Faulty steering gear case assembly	*Replace steering gear case assembly.*
	Broken or otherwise damaged wheel bearing(s)	*Replace wheel bearing(s).*
Wander or poor steering stability	Mismatched or uneven tires	*Replace or inflate tires to proper pressure.*
	Loosen ball joints and tie-rod ends	*Replace suspension control arm or tie-rod end.*
	Faulty struts or mountings	*Replace strut or repair mounting.*
	Loose stabilizer bar	*Tighten or replace stabilizer bar or bush.*
	Broken or sagging coil springs	*Replace coil spring.*
	Rack and pinion adjustment	*Check and adjustment rack and pinion torque.*
	Disturbed front wheel alignment	*Check and adjust front wheel alignment.*
	Faulty steering gear case assembly	*Replace steering gear case assembly.*

Condition	Possible cause	Correction / Reference Item
Erratic steering when braking	Worn wheel bearings	*Replace wheel bearing.*
	Broken or sagging coil springs	*Replace coil spring.*
	Wheel tires are inflated unequally	*Inflate tires to proper pressure.*
	Disturbed front wheel alignment	*Check and adjust front wheel alignment.*
	Brakes not working in unison	*Check and repair brake system.*
	Leaking wheel cylinder or caliper	*Repair or replace wheel cylinder or caliper.*
	Warped discs	*Replace brake disc.*
	Badly worn brake linings	*Replace brake shoe lining.*
	Drum is out of round in some brakes	*Replace brake drum.*
	Defective wheel cylinders	*Replace or repair wheel cylinder.*

Steering System Inspection

S7RW0A6104002

Check steering system referring to the following items.

Inspection Item		Referring section
Steering wheel	Play, rattle	“Steering Wheel Play Check in Section 6C”
Tie-rod end	Looseness and damage	“Tie-Rod End Inspection in Section 6C”
	Wheel alignment	“Front Wheel Alignment Inspection and Adjustment in Section 2B”
Tie-rod end boot	Damage	“Tie-Rod End Boot On-Vehicle Inspection in Section 6C”
Steering rack boot	Damage	“Steering Rack Boot Inspection in Section 6C”
Steering shaft joint	Rattle and damage	“Steering Shaft Joint On-Vehicle Inspection in Section 6C”
EPS system	Operation	“EPS System Check in Section 6C”

Steering Wheel and Column

Precautions

Service Precautions of Steering Wheel and Column

S7RW0A6200001

For service precautions, refer to “Precautions on Service and Diagnosis of Air Bag System in Section 8B”.

Service and Diagnosis

For diagnosis and servicing, refer to “Precautions on Service and Diagnosis of Air Bag System in Section 8B”.

Disabling Air Bag System

For disabling air bag system, refer to “Disabling Air Bag System in Section 8B”.

Enabling Air Bag System

For enabling air bag system, refer to “Enabling Air Bag System in Section 8B”.

Handling and Storage

For handling and storage, refer to “Precautions on Handling and Storage of Air Bag System Components in Section 8B”.

Disposal

For disposal, refer to “Precautions on Disposal of Air Bag and Seat Belt Pretensioner in Section 8B”.

General Description

Steering Wheel and Column Construction

S7RW0A6201001

This double tube type steering column has the following three important features in addition to the steering function:

- The column is energy absorbing, designed to compress in a front-end collision.
- The ignition switch and lock are mounted conveniently on this column.
- With the column mounted lock, the ignition and steering operations can be locked to inhibit theft of the vehicle.

To insure the energy absorbing action, it is important that only the specified screws, bolts and nuts be used as designated, and that they are tightened to the specified torque. When the column assembly is removed from the vehicle, special care must be taken in handling it. Use of a steering wheel puller other than the recommended puller in this manual or a sharp blow on the end of the steering shaft, leaning on the assembly, or dropping the assembly could shear the plastic shear pins which maintain column length and position.

The driver air bag (inflator) module is one of the supplemental restraint (air bag) system components and is mounted to the center of the steering wheel. During certain frontal crashes, the air bag system supplements the restraint of the driver’s and passenger’s seat belts by deploying the air bags. The air bag (inflator) module should be handled with care to prevent accidental deployment. When servicing, be sure to observe “Precautions on Service and Diagnosis of Air Bag System in Section 8B”.

Diagnostic Information and Procedures

Checking Steering Column for Accident Damage

S7RW0A6204001

NOTE

Vehicles involved in accidents resulting in body damage, where steering column has been impacted or air bag deployed may have a damaged or misaligned steering column.

- Check that two capsules (1) are attached to steering column bracket securely. If found loose, replace steering column assembly.

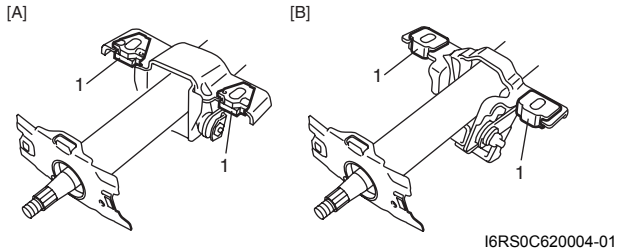

[A]: Type A	[B]: Type B

- Take measurement “a”, “b” and “c” as follows.
  If it is shorter than specified length, replace steering column assembly or steering lower shaft with new one.
  Type A

  <u>Power steering column length</u>
  “a”: 397 ± 2 mm (15.6 ± 0.08 in.)
  “b”: 65.5 ± 0.5 mm (2.58 ± 0.02 in.)
  “c”: 347.7 ± 1 mm (13.7 ± 0.04 in.)

  Type B

  <u>Power steering column length</u>
  “a”: 363.6 ± 1.5 mm (14.3 ± 0.06 in.)
  “b”: 65 ± 1 mm (2.56 ± 0.04 in.)
  “c”: 334 ± 1.5 mm (13.1 ± 0.06 in.)

- Check that there is no axial looseness “d” and no axially-vertical looseness “e” for steering column shaft.
  If found defective, replace steering column assembly with new one.

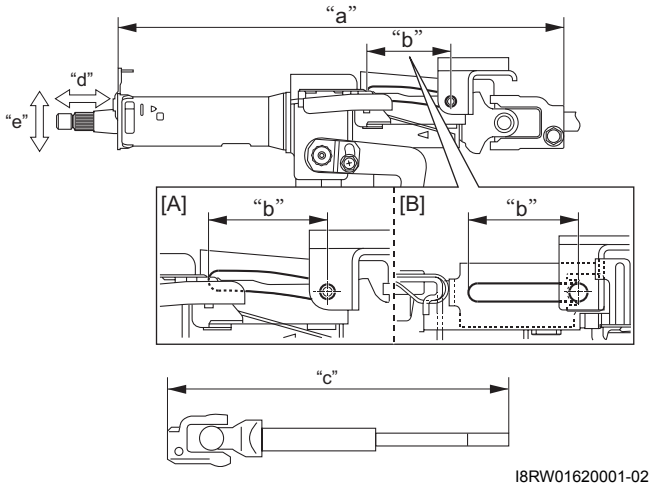

[A]: Type A	[B]: Type B

- Check steering shaft joints and shaft for any damages such as crack, breakage, malfunction or excessive play.
  If anything is found faulty, replace as lower shaft assembly or steering column assembly.

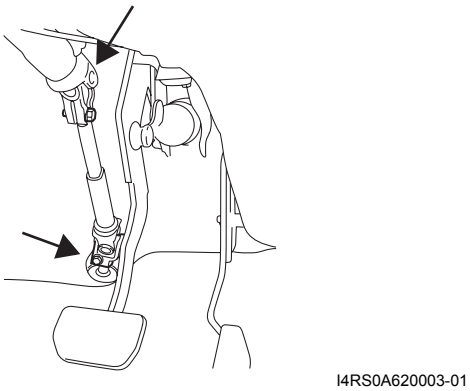

- Check steering shaft for smooth rotation.
  If found defective, replace as steering column assembly.
- Check steering shaft and steering column for bend, cracks or deformation.
  If found defective, replace.

Repair Instructions

Steering Wheel and Column Components

S7RW0A6206001

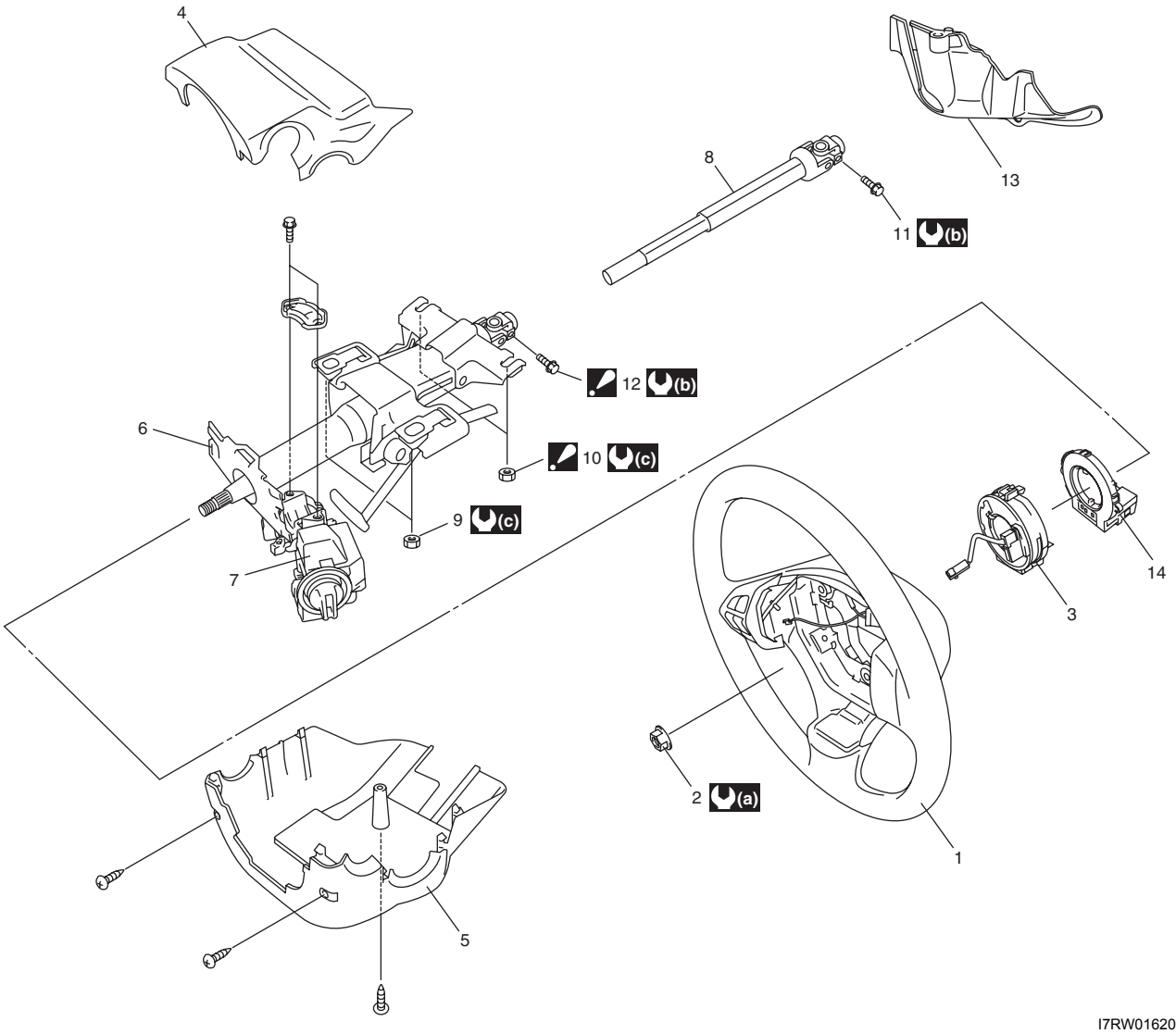

I7RW01620001-01

1. Steering wheel	10. Steering column assembly mounting nut No.2 : After tightening column mounting nut No.2, tighten column mounting nut No.1.
2. Steering shaft nut	11. Steering lower shaft assembly lower joint bolt
3. Contact coil cable assembly	12. Steering lower shaft assembly upper joint bolt : After tightening all column mounting nuts and lower shaft lower joint bolt, tighten lower shaft upper joint bolt.
4. Steering column upper cover	13. Steering joint cover
5. Steering column lower cover	14. Steering angle sensor (ESP® model)
6. Steering column assembly	(a) : 33 N·m (3.3 kgf-m, 24.0 lb-ft)
7. Steering lock assembly	(b) : 25 N·m (2.5 kgf-m, 18.0 lb-ft)
8. Steering lower shaft assembly	(c) : 14 N·m (1.4 kgf-m, 10.5 lb-ft)
9. Steering column assembly mounting nut No.1	

Steering Wheel Removal and Installation

S7RW0A6206002

⚠ CAUTION

Do not turn the contact coil more than allowable number of turns (about two and a half turns from the center position clockwise or counterclockwise respectively) with steering wheel removed, or coil will break.

Removal

⚠ CAUTION

Do not hammer the end of the shaft. Hammering it will loosen the plastic shear pins which maintain the column length and impair the collapsible design of the column.

1) Disconnect negative (–) cable at battery.
2) Disable air bag system referring to “Disabling Air Bag System in Section 8B”.
3) Remove driver air bag (inflator) module from steering wheel. Refer to “Driver Air Bag (Inflator) Module Removal and Installation in Section 8B”.
4) Disconnect horn connector and audio control switch connector, if equipped.
5) Remove steering shaft nut and then make alignment marks (1) on steering wheel and shaft for a guide during reinstallation.

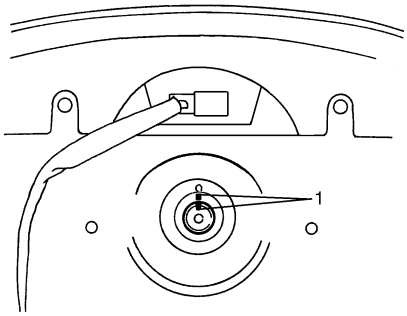

I4RS0A620005-01

6) Remove steering wheel using special tool.

Special tool
(A): 09944–36011

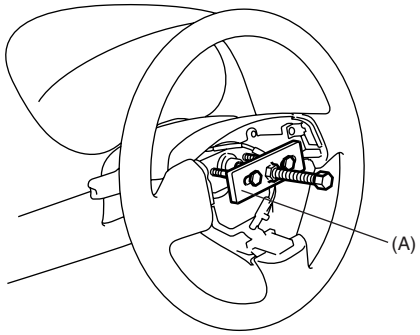

I4RS0A620006-01

Installation

⚠ CAUTION

Following 2 Steps (Step 1) and 2)) are prerequisite for installation of steering wheel. If steering wheel has been installed without these 2 Steps, contact coil will break when steering wheel is turned.

1) Check that vehicle’s front tires are at straight-ahead position and contact coil is centered. If contact coil is turned after removing steering wheel, center contact coil referring to “Centering Contact Coil Cable Assembly”.
2) Install steering wheel to steering shaft with 2 grooves (1) on contact coil fitted in 2 lugs (2) in the back of steering wheel and also aligning marks (3) on steering wheel and steering shaft.
3) Tighten steering shaft nut (4) to specified torque.

Tightening torque
Steering shaft nut (a): 33 N·m (3.3 kgf-m, 24.0 lb-ft)

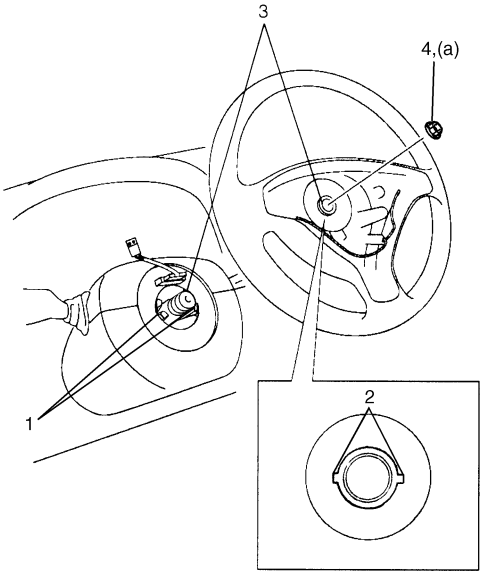

I4RS0A620007-01

4) Connect horn connector and audio control switch connector, if necessary.
5) Install driver air bag (inflator) module to steering wheel. Refer to “Driver Air Bag (Inflator) Module Removal and Installation in Section 8B”.
6) Connect negative (–) cable to battery.
7) Enable air bag system referring to “Enabling Air Bag System in Section 8B”.

Contact Coil Cable Assembly Removal and Installation

S7RW0A6206003

⚠ CAUTION

Do not turn contact coil more than allowable number of turns (about two and a half turns from the center position clockwise or counterclockwise respectively), or coil will break.

Removal

1) Disconnect negative (–) cable at battery.
2) Disable air bag system referring to “Disabling Air Bag System in Section 8B”.
3) Remove steering wheel from steering column referring to “Steering Wheel Removal and Installation”.
4) Remove steering column hole cover.
5) Remove steering column lower cover (2) and upper cover (1).

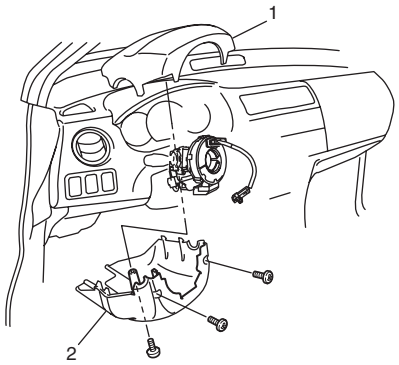

I6RW0B620005-01

6) Remove contact coil cable assembly (1) with steering angle sensor (2) (ESP® model) from steering column.

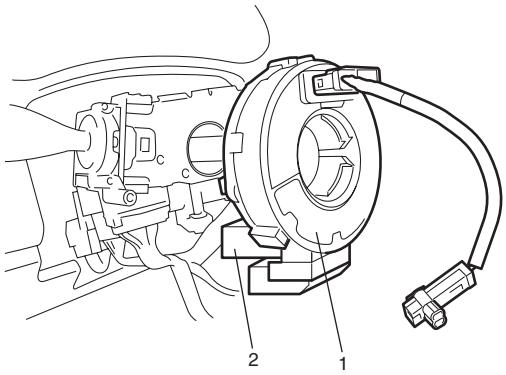

I5RW0C620002-01

7) (ESP® model)
Remove steering angle sensor from contact coil cable assembly referring to “Steering Angle Sensor Removal and Installation (ESP® model)”.

Installation

1) Check to make sure that vehicle’s front tires are set at straight-ahead position and then ignition switch is at LOCK position.
2) (ESP® model)
Install steering angle sensor to contact coil cable assembly referring to “Steering Angle Sensor Removal and Installation (ESP® model)”.
3) Install contact coil cable assembly with steering angle sensor (ESP® model) to steering to column securely.

NOTE

New contact coil cable assembly is supplied with contact coil set and held at its center position with a lock pin (1). Remove this lock pin after installing contact coil cable assembly to steering column.

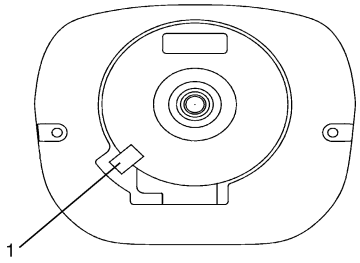

I4RS0A620010-01

4) Install steering column upper cover (1) and lower cover (2).

⚠ CAUTION

When installing covers, be careful so that each lead wire is not caught between covers. Otherwise, each lead wire is damaged.

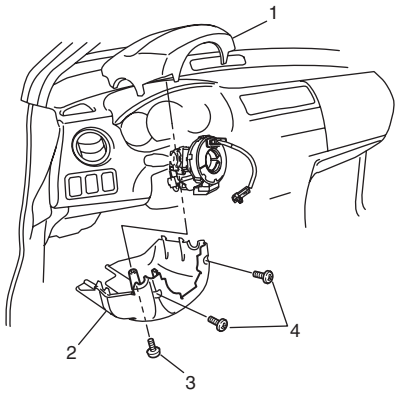

I6RW0B620003-01

3. Standard screw	4. Tapping screw

5) Install steering wheel to steering column. Refer to “Steering Wheel Removal and Installation”.
6) Connect negative (–) cable to battery.
7) Enable air bag system referring to “Enabling Air Bag System in Section 8B”.

Centering Contact Coil Cable Assembly

S7RW0A6206004

1) Check that vehicle’s wheels (front tires) are set at straight-ahead position.
2) Check that ignition switch is at LOCK position.
3) Turn contact coil counterclockwise slowly with a light force till contact coil will not turn any further.

NOTE

Contact coil can turn about 5 turns at the maximum, that is, if it is at the center position, can turn about two and a half turns both clockwise and counterclockwise.

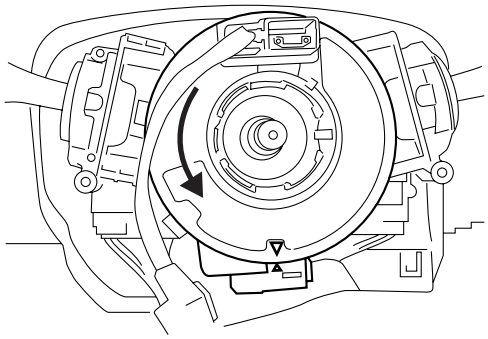

I4RS0A620012-01

4) From the position where contact coil became unable to turn any further (it stopped), turn it back clockwise about two and a half rotations and align center mark with alignment mark (1).

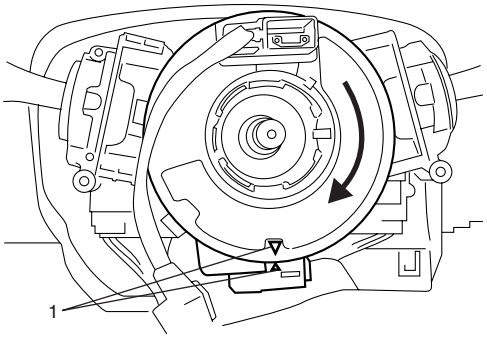

I4RS0A620013-01

Contact Coil Cable Assembly Inspection

S7RW0A6206005

Refer to “Contact Coil Cable and Its Circuit Check in Section 8B”.

Steering Angle Sensor Removal and Installation (ESP® model)

S7RW0A6206011

Removal

1) Remove steering wheel and contact coil cable assembly. Refer to “Steering Wheel Removal and Installation” and “Contact Coil Cable Assembly Removal and Installation”.
2) Remove steering angle sensor (2) from contact coil cable assembly (3) while opening fitting parts (1) of contact coil cable assembly.

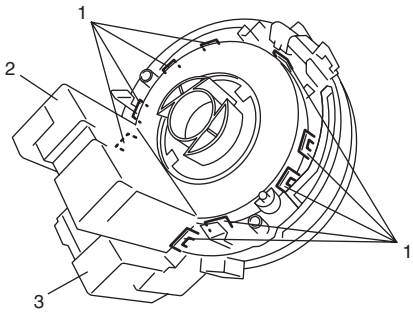

I6JB01620003-01

Installation

1) Install steering angle sensor (2) by fitting engagement parts (1) of contact coil cable assembly to claws of steering angle sensor as shown in figure.

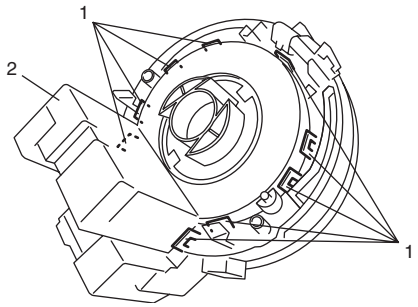

I6JB01620004-01

2) Install contact coil cable assembly and steering wheel. Refer to “Contact Coil Cable Assembly Removal and Installation” and “Steering Wheel Removal and Installation”.

Steering Angle Sensor Inspection (ESP® model)

S7RW0A6206012

Refer to “Steering Angle Sensor Inspection in Section 4F”.

Steering Column Removal and Installation

S7RW0A6206006

⚠ CAUTION

Once the steering column is removed from the vehicle, the column is extremely susceptible to damage.

- **Dropping the column assembly on its end could collapse the steering shaft or loosen the plastic shear pins which maintain column length.**
- **Leaning on the column assembly could cause it to bend or deform.**

Any of the damage could impair the column’s collapsible design.
Steering column mounting nuts should not be loosened with steering shaft joint upper side bolt tightened as this could cause damage to shaft joint bearing.

NOTE

When servicing steering column or any column-mounted component, remove steering wheel. But when removing steering column simply to gain access to instrument panel components, leave steering wheel installed on steering column.

Removal

⚠ WARNING

Never rest a steering column assembly on the steering wheel with the air bag (inflator) module face down and column vertical. Otherwise, personal injury may result.

1) Disconnect negative (–) cable at battery.
2) Disable air bag system. Refer to “Disabling Air Bag System in Section 8B”.
3) Remove steering wheel and contact coil cable assembly referring to “Steering Wheel Removal and Installation” and “Contact Coil Cable Assembly Removal and Installation”.
4) (Immobilizer model)
   Remove immobilizer control module from steering column, referring to “ICM Removal and Installation in Section 10C”.
5) Detach lighting switch and wiper switch from steering column.
6) Remove lower shaft upper joint bolt (1).

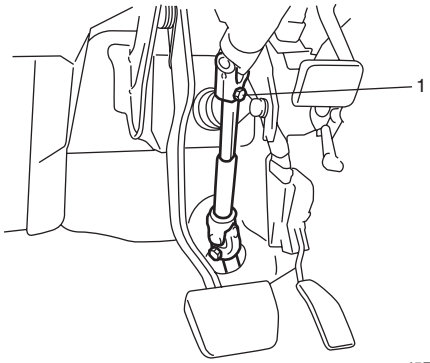

I5RW0A620005-01

7) Remove steering column mounting nuts (1), and then remove steering column from vehicle.

NOTE

Do not move tilt lever until mounting bolts and nuts are tightened to specified torque.

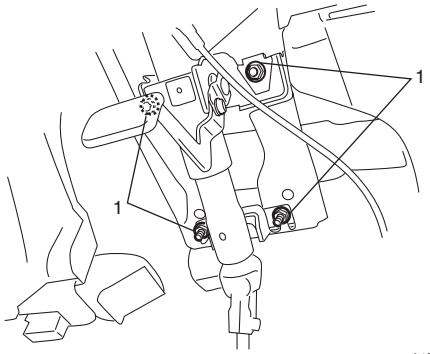

I4RS0A620017-01

Installation

⚠ CAUTION

After tightening steering column mounting nuts, shaft joint bolts should be tightened. Wrong tightening order could cause a damage to shaft joint.

1) Be sure that front wheels are in straight.
2) Install steering column assembly to lower and upper brackets. Tighten steering column mounting nuts No.2 (1) first and then steering column mounting nuts No.1 (2) to specifications as given below.

Tightening torque
Steering column mounting nut No.1 (a): 14 N·m (1.4 kgf-m, 10.5 lb-ft)
Steering column mounting nut No.2 (b): 14 N·m (1.4 kgf-m, 10.5 lb-ft)

NOTE

- **When installing, make sure that clearance "a" between bolt (3) and bracket (4) should be 0 (zero).**
- **After installing tilt steering column, make sure that steering column moves upwards and downwards smoothly and stops when tilt lever is fixed.**

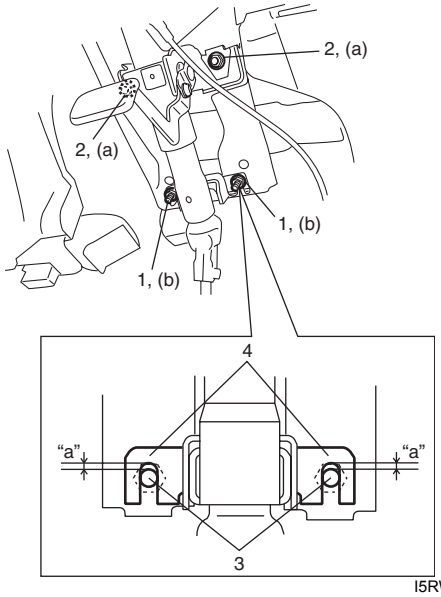

I5RW0A620006-02

3) Align flat part "a" of steering lower shaft (1) with bolt hole "b" of shaft joint (2) of column as shown. Then insert lower shaft into shaft joint of steering column.
4) Tighten lower shaft upper joint bolt (3) to specified torque.

⚠ CAUTION

After tightening column nuts, tighten steering shaft upper joint bolt. Otherwise, shaft joint bearing is damaged.

Tightening torque
Steering lower shaft assembly upper joint bolt (a): 25 N·m (2.5 kgf-m, 18.5 lb-ft)

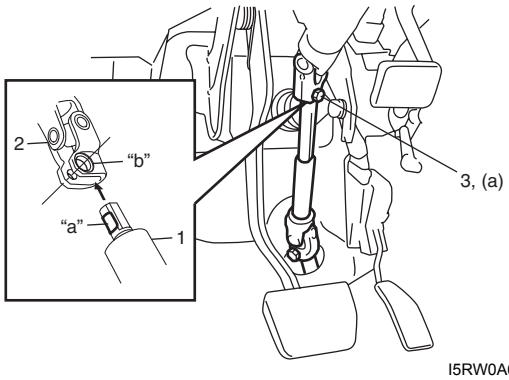

I5RW0A620007-01

5) Install lighting switch and wiper switch to steering column.
6) (Immobilizer model)
Install immobilizer control module from steering column, referring to "ICM Removal and Installation in Section 10C".
7) Install contact coil cable assembly and steering wheel referring to "Contact Coil Cable Assembly Removal and Installation" and "Steering Wheel Removal and Installation".
8) Connect negative (–) cable to battery.
9) Enable air bag system referring to "Enabling Air Bag System in Section 8B".

Steering Column Inspection

S7RW0A6206007

Check steering column for damage and operation referring to "Checking Steering Column for Accident Damage".

Ignition Switch Cylinder Assembly Removal and Installation (Non- Keyless Start Model)

S7RW0A6206008

Removal

1) Disconnect negative (–) cable at battery.
2) Disable air bag system referring to “Disabling Air Bag System in Section 8B”.
3) Remove steering column upper and lower covers.
4) (Immobilizer model)
   Remove immobilizer control module referring to “ICM Removal and Installation in Section 10C”.
5) Remove ignition switch cylinder assembly as follows.
   a) Turn ignition key to “ACC” position.
   b) Insert 2 mm (0.078 in.) rod (2) through hole (3) and push ignition switch cylinder lock.
   c) Detach ignition switch cylinder assembly (1) from steering lock assembly (4).

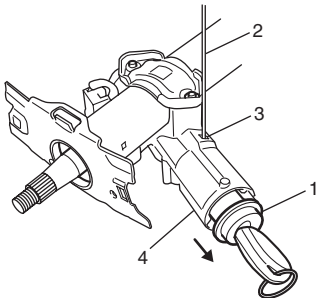

I5JB0A620025-01

Installation

1) Install ignition switch cylinder assembly as follows.
   a) Turn ignition key to “ACC” position.
   b) In this state, push ignition switch cylinder assembly into steering lock assembly till it clicks.
2) (Immobilizer model)
   Install immobilizer control module referring to “ICM Removal and Installation in Section 10C”.
3) Install upper and lower cover and screws.
4) Connect negative (–) cable to battery.
5) Enabling air bag system referring to “Enabling Air Bag System in Section 8B”.
6) (Immobilizer model)
   If ignition switch cylinder assembly (that is ignition key) has replaced, register ignition key transponder code to ECM referring to “Registration of the Ignition Key in Section 10C”.

Steering Lock Assembly (Ignition Switch) Removal and Installation

S7RW0A6206009

Removal

1) Remove steering column. Refer to “Steering Column Removal and Installation”.
2) Using center punch (1), loosen and remove steering lock mounting bolts (2).

NOTE

Use care not to damage aluminum part of steering lock body with center punch.

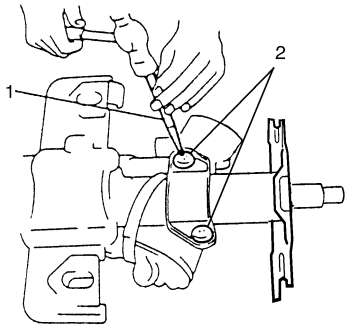

I4RS0B620005-02

3) Turn ignition key to “ACC” or “ON” position and remove steering lock assembly from steering column.

Installation

1) Position oblong hole (1) of steering shaft (2) in the center of hole (3) in column (4).
2) Turn ignition key to “ACC” or “ON” position and install steering lock assembly (5) onto column (4).
3) Now turn ignition key to “LOCK” position and pull it out.
4) Align hub on lock with oblong hole (1) of steering shaft (2) and rotate shaft to assure that steering shaft is locked.

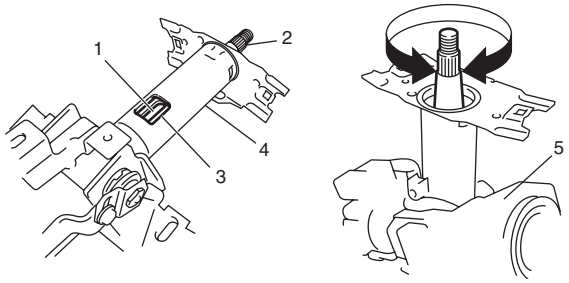

I4RS0B620006-02

5) Tighten new bolts (1) until head of each bolt is broken off.
6) Turn ignition key to “ACC” or “ON” position and check to be sure that steering shaft (2) rotates smoothly. Also check for lock operation.

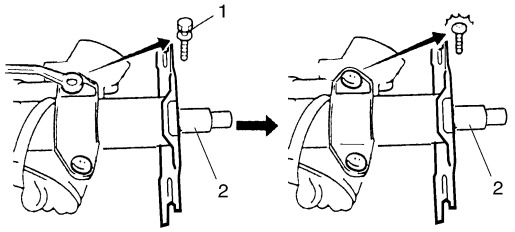

I4RS0B620007-02

7) Install steering column. Refer to “Steering Column Removal and Installation”.
8) (Keyless start model)
If steering lock assembly has replaced, after completing installation, register steering lock unit ID code to keyless start control module as following.
   - Immobilizer model:
     Register ignition key transponder code in ECM referring to “Registration of the Ignition Key in Section 10C”.
   - Non-immobilizer model:
     Register steering lock unit ID code in keyless start control module referring to “Keyless Start Registration in Section 10E”.

Steering Lower Shaft Removal and Installation

S7RW0A6206010

⚠ CAUTION

Never turn steering wheel while steering lower shaft is removed.
Should it have been turned and contact coil have got out of its centered position, it needs to be centered again. Also, turning steering wheel more than about two and a half turns will break contact coil.

Removal

1) Turn steering wheel so that vehicle’s front tires are at straight-ahead position.
2) Turn ignition switch to LOCK position and remove key.
3) Remove steering joint cover.
4) Make alignment marks (4) on lower shaft (1) and pinion shaft (3) for a guide during reinstallation.
5) Remove lower shaft upper and lower joint bolts (2).
6) Remove steering lower shaft (1).

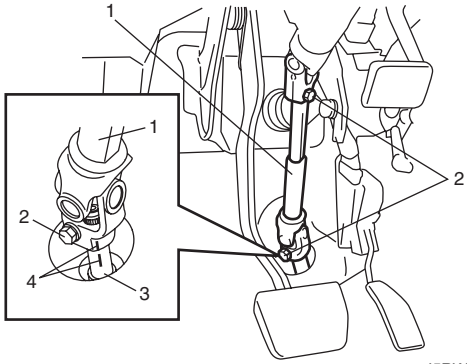

I5RW0A620008-01

Installation

1) Be sure that front wheels are in straight forward state.
2) Align flat part “a” of steering lower shaft (1) with bolt hole “b” of shaft joint (2) of column as shown. Then insert lower shaft into shaft joint of steering column.
3) Insert lower shaft (1) into pinion shaft (3) with matching marks (4).
4) Tighten lower joint bolt (6) to specified torque first and then upper joint bolt (5) to specified torque.

   Tightening torque
   Steering lower shaft assembly upper joint bolt (a): 25 N·m (2.5 kgf-m, 18.5 lb-ft)
   Steering lower shaft assembly lower joint bolt (b): 25 N·m (2.5 kgf-m, 18.5 lb-ft)

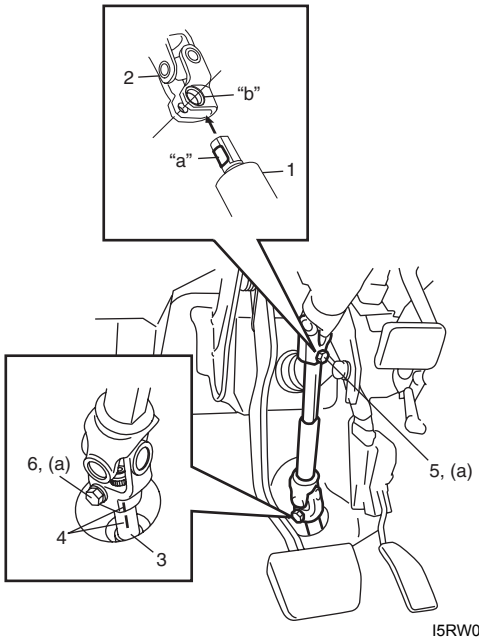

I5RW0A620009-02

Specifications

Tightening Torque Specifications

S7RW0A6207001

Fastening part	Tightening torque			Note
	N·m	kgf-m	lb-ft	
Steering shaft nut	33	3.3	24.0	☞
Steering column mounting nut No.1	14	1.4	10.5	☞
Steering column mounting nut No.2	14	1.4	10.5	☞
Steering lower shaft assembly upper joint bolt	25	2.5	18.5	☞ / ☞
Steering lower shaft assembly lower joint bolt	25	2.5	18.5	☞

NOTE

The specified tightening torque is also described in the following.
“Steering Wheel and Column Components”

Reference:
For the tightening torque of fastener not specified in this section, refer to “Fasteners Information in Section 0A”.

Special Tools and Equipment

Special Tool

S7RW0A6208001

09944–36011 Steering wheel remover ☞	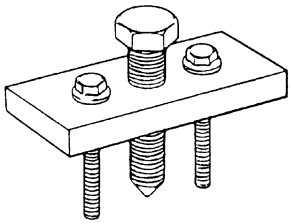	

Power Assisted Steering System

Precautions

P/S System Note

S7RW0A6300001

NOTE

All steering gear fasteners are important attaching parts in that they could affect the performance of vital parts and systems, and/or could result in major repair expense. They must be replaced with one of the same part number or with an equivalent part if replacement becomes necessary. Do not use a replacement part of lesser quality or substitute design. Torque values must be used as specified during reassembly to assure proper retention of these parts.

Precautions in Diagnosing Troubles

S7RW0A6300002

- Take a note of DTC indicated on the SUZUKI scan tool.
- Before inspection, be sure to read “Precautions for Electrical Circuit Service in Section 00” and understand what is written there.
- DTC C1122 (engine speed signal failure) is indicated when ignition switch is at ON position and engine is not running, but it means there is nothing abnormal if indication changes to a normal one when engine is started.
- As DTC is stored in memory of the P/S control module, be sure to clear memory after repair by performing the procedure described in “DTC Clearance”.

General Description

P/S System Description

S7RW0A6301001

This electronic power steering (EPS) system consists of a power steering (P/S) control module (3), a torque sensor (4), a P/S motor (5). In this system, the P/S control module determines the level and direction of the assist force for the steering wheel (1) according to the signal from the torque sensor and the vehicle speed signal from BCM (9). The P/S control module runs the motor so as to assist the operation of the steering wheel.
The P/S control module diagnoses troubles which may occur in the area including the following components when the ignition switch is ON and the engine is running. When the P/S control module detects any malfunction, it stops the motor operation.

- Torque sensor
- Vehicle speed signal circuit
- Engine speed signal circuit
- P/S Motor
- P/S control module.

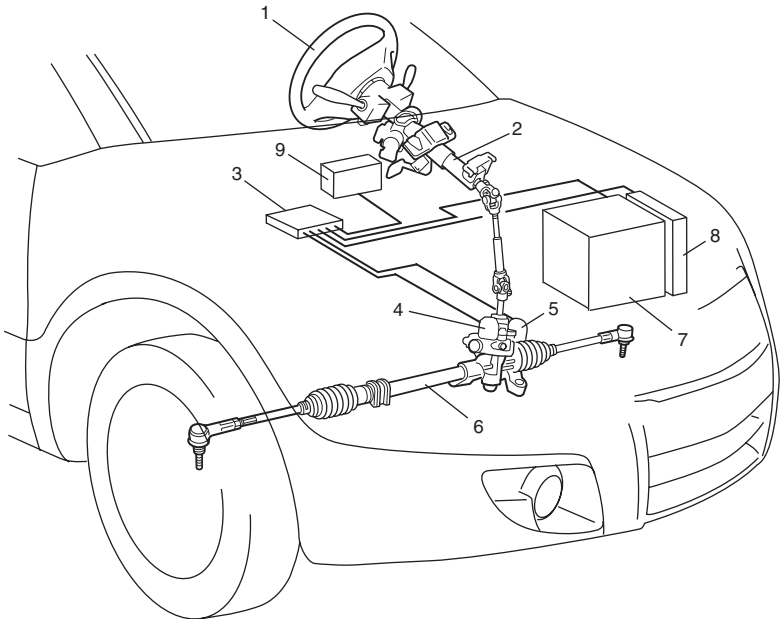

I7RW01632001-01

2. Steering column	7. Battery
6. Steering gear case assembly	8. ECM

EPS Diagnosis General Description

S7RW0A6301002

The P/S system in this vehicle is controlled by the P/S control module. The P/S control module has an on-board diagnostic system which detects a malfunction in this system. When diagnosing troubles, be sure to have full understanding of the outline of “On-Board Diagnostic System Description” and each item in “Precautions in Diagnosing Troubles”, and then execute diagnosis according to “EPS System Check”.

On-Board Diagnostic System Description

S7RW0A6301003

The P/S control module performs the on-board diagnosis (self-diagnosis) on the system and operates the “EPS” warning light (1) as follows.

- The “EPS” warning light lights when the ignition switch is turned to ON position (but the engine at stop) regardless of the condition of the P/S control system. This is only to check if the “EPS” warning light is operated properly.
- If the areas monitored by the P/S control module is free from any trouble after the engine start (while engine is running), the “EPS” warning light turns OFF.
- When the P/S control module detects a trouble which has occurred in the monitored areas the “EPS” warning light comes ON while the engine is running to warn the driver of such occurrence of the trouble and at the same time it stores the exact trouble area in memory inside of the P/S control module.

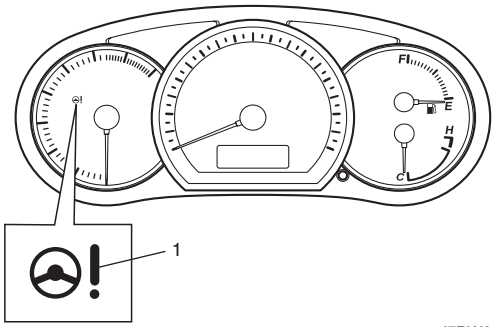

I7RW01632002-01

Driving Cycle

A “Driving Cycle” consists of engine startup and engine shutoff.

3 Driving Cycles Detection Logic

The malfunction detected in the first and second driving cycle is stored in P/S control module memory (in the form of pending DTC) but the “EPS” warning light does not light at these time. It lights up at the third detection of same malfunction also in the next driving cycle.

Schematic and Routing Diagram

EPS System Wiring Circuit Diagram

S7RW0A6302001

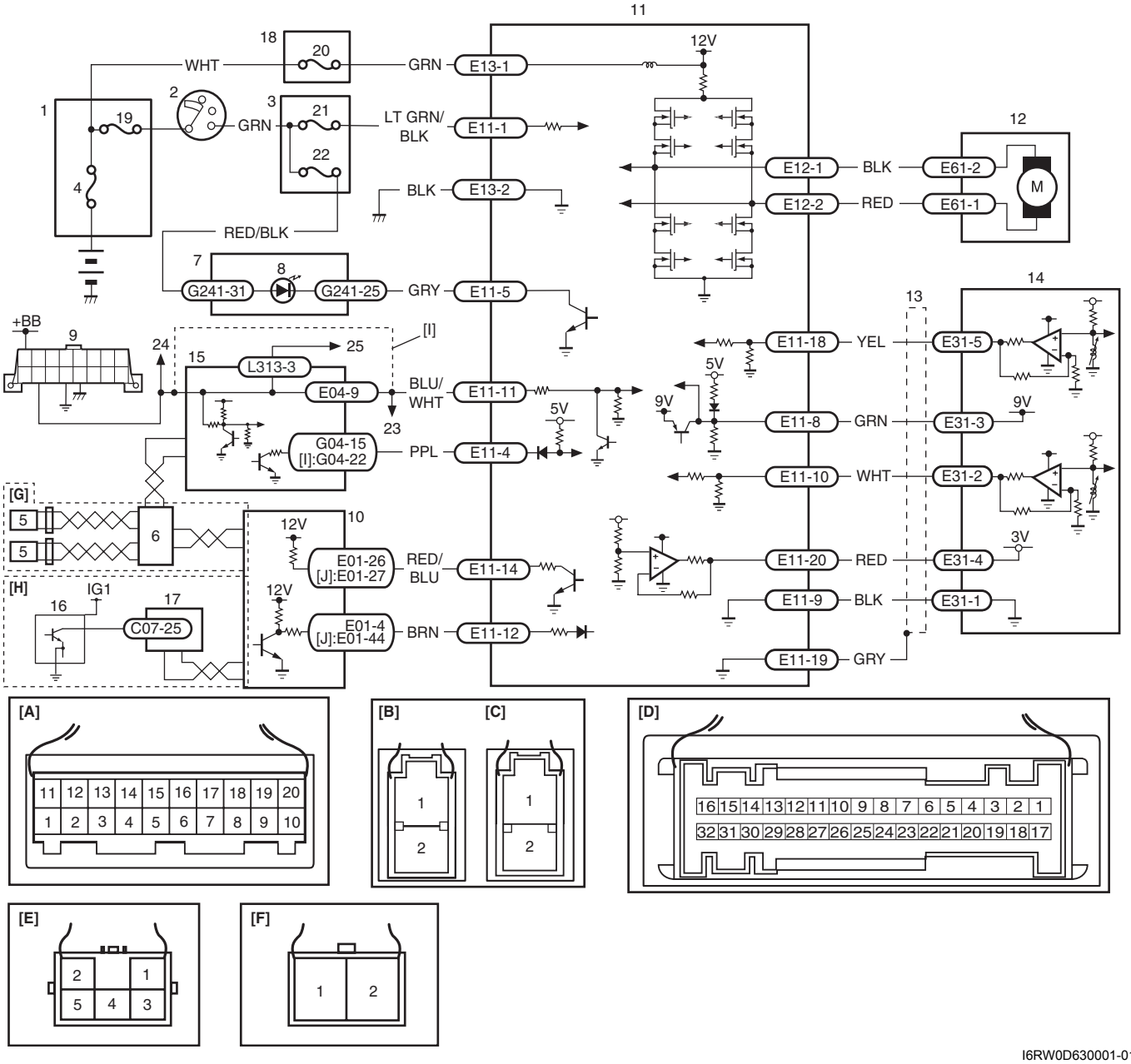

I6RW0D630001-01

[A]: P/S control module connector No.1 “E11” (viewed from harness side)	3. Junction block assembly	15. BCM
[B]: P/S control module connector No.2 “E13” (viewed from harness side)	4. Main fuse	16. Output shaft speed sensor
[C]: P/S control module connector No.3 “E12” (viewed from harness side)	5. Front (left/right) wheel speed sensor	17. TCM
[D]: Combination meter connector “G241” (viewed from harness side)	6. ABS control module	18. Individual circuit fuse box No.1
[E]: Torque sensor connector “E31” (viewed from harness side)	7. Combination meter	19. “IGN” fuse
[F]: Motor connector “E61” (viewed from harness side)	8. “EPS” warning light	20. “P/S” fuse
[G]: M/T model	9. Data link connector (DLC)	21. “IG1 SIG” fuse
[H]: A/T model	10. ECM	22. “MTR” fuse
[I]: Junction block without BCM model (Taiwan model)	11. P/S control module	23. To ABS control module
[J]: M15A engine with 4A/T equipped with slip control model (Hong Kong model)	12. P/S motor	24. To HVAC control module
1. Main fuse box	13. Shield	25. To SDM
2. Ignition switch	14. Torque sensor (built into steering gear case)	

Terminal Arrangement of P/S Control Module Coupler (Viewed from Harness Side)

Terminal	Circuit	Terminal	Circuit
E11-1	Ignition switch signal for P/S control module	E11-13	—
E11-2	—	E11-14	P/S active signal (idle up signal)
E11-3	—	E11-15	—
E11-4	Vehicle speed signal	E11-16	—
E11-5	“EPS” warning Light	E11-17	—
E11-6	—	E11-18	Torque sensor signal (Main)
E11-7	—	E11-19	Ground for shield wire
E11-8	9 V power supply for torque sensor	E11-20	Reference sensor power supply for torque sensor
E11-9	Ground for torque sensors	E12-1	Motor output 1
E11-10	Torque sensor signal (Sub)	E12-2	Motor output 2
E11-11	Serial communication circuit for data link connector	E13-1	Main power supply for internal memory and EPS motor
E11-12	Engine speed signal	E13-2	Ground for P/S control module

Diagnostic Information and Procedures

EPS System Check

S7RW0A6304001

⚠ WARNING

Carry out test drive in light traffic area to prevent an accident.

Refer to the following items for the details of each step.

Step	Action	Yes	No
1	☞ **Customer complaint analysis** 1) Perform customer complaint analysis referring to “Customer Complaint Analysis”. *Was customer complaint analysis performed?*	Go to Step 2.	Perform customer complaint analysis.
2	☞ **DTC check, record and clearance** 1) Check for DTC (including pending DTC) referring to “DTC Check, Record and Clearance”. *Is there any DTC(s)?*	Print DTC or write them down and clear them by referring to “DTC Clearance”, and go to Step 3.	Go to Step 4.
3	☞ **Visual inspection** 1) Perform visual inspection referring to “Visual Inspection”. *Is there any faulty condition?*	Repair or replace malfunction part, and go to Step 11.	Go to Step 5.
4	☞ **Visual inspection** 1) Perform visual inspection referring to “Visual Inspection”. *Is there any faulty condition?*	Repair or replace malfunction part, and go to Step 11.	Go to Step 8.
5	☞ **Trouble symptom confirmation** 1) Confirm trouble symptom referring to “Trouble Symptom Confirmation”. *Is trouble symptom identified?*	Go to Step 6.	Go to Step 7.
6	☞ **Rechecking and record of DTC** 1) Recheck for DTC referring to “DTC Check”. *Is there any DTC(s)?*	Go to Step 9.	Go to Step 8.
7	☞ **Rechecking and record of DTC** 1) Recheck for DTC referring to “DTC Check”. *Is there any DTC(s)?*	Go to Step 9.	Go to Step 10.

Step	Action	Yes	No
8	☞ **Steering symptom diagnosis and P/S system symptom diagnosis** 1) Check and repair according to “Steering Symptom Diagnosis in Section 6A” and “P/S System Symptom Diagnosis”. *Are check and repair complete?*	Go to Step 11.	Check and repair malfunction part(s), and go to Step 11.
9	☞ **Troubleshooting for DTC** 1) Check and repair according to applicable DTC diag. flow. *Are check and repair complete?*	Go to Step 11.	Check and repair malfunction part(s), and go to Step 11.
10	☞ **Intermittent problems check** 1) Check for intermittent problems referring to “Intermittent Problems Check”. *Is there any faulty condition?*	Repair or replace malfunction part(s), and go to Step 11.	Go to Step 11.
11	☞ **Final confirmation test** 1) Clear DTC if any. 2) Perform final confirmation test referring to “Final Confirmation Test”. *Is there any problem symptom, DTC or abnormal condition?*	Go to Step 6.	End.

NOTE

- **As execution of “DTC Clearance” will clear all DTCs, be sure to record all DTCs before service.**
- **DTC C1122 is indicated when ignition switch is at ON position and engine is not running, it means that nothing is abnormal.**
- **Current DTC and history DTC can be identified by condition of the “EPS” warning light. “EPS” warning light operates as follows.**

	Current DTC is set. (Abnormality exists at present.)	**Only history DTC is set. (Faulty condition occurred once in the past, but normal condition is detected at present.)**	**Current and history DTC exist.**
“EPS” warning light after engine started	Remains ON.	Turns OFF.	Remains ON.

Step 1: Customer Complaint Analysis
Record details of the problem (failure, complaint) and how it occurred as described by the customer. For this purpose, use of such an inspection form will facilitate collecting information to the point required for proper analysis and diagnosis. Check if the problem described in “Customer questionnaire” actually occurs in the vehicle if necessary. (This step should be performed with the customer if possible)

Customer questionnaire (Example)

User name:	Model:	VIN:	
Date of issue:	Date Reg.	Date of problem:	Mileage:

Problem Symptoms	• Steering wheel feels heavy • Vehicle pulls to one side during straight driving • Poor recovery from turns • Too much play in steering • Abnormal noise while vehicle is running: from motor, from rack and pinion, other _____ • Other _____
Frequency of Occurrence	• Continuous/Intermittent (times a day, a month)/other _____
Conditions for Occurrence of Problem	• Vehicle at stop & ignition switch ON: • When starting: at initial start only/at every start/Other _____ • Vehicle speed while: while accelerating/while decelerating/at stop/ while turning/while running at constant speed/ other _____ • Road surface condition: Paved road/rough road/snow-covered road/other _____ • Chain equipment:
Environmental Condition	• Weather: fair/cloudy/rain/snow/other _____ • Temperature: °F (°C)
DTC	• First check: Normal code/malfunction code ( ) • Second check after driving test: Normal code/malfunction code ( )

I7RW01632004-02

NOTE

This form is a standard sample. It should be modified according to conditions characteristic of each market.

Step 2: DTC check, record and clearance
First, referring to “DTC Check”, check DTC (including pending DTC). If DTC exists, print or write down DTC and then clear them by referring to “DTC Clearance”. DTC indicates malfunction in the system but it is not possible to know from it whether the malfunction is occurring now or it occurred in the past and normal condition has been restored. In order to know that, check symptom in question according to Step 5 and then recheck DTC according to Step 6 and 7.
Diagnosing a trouble based on the DTC in this step only or failure to clear the DTC in this step may result in an faulty diagnosis, trouble diagnosis of a normal circuit or difficulty in troubleshooting which is otherwise unnecessary.

Step 3 and Step 4: Visual inspection
As a preliminary step, be sure to perform visual check of the items that support proper function of the P/S system referring to “Visual Inspection”.

Step 5: Trouble Symptom Confirmation
Based on information obtained in “Step 1: Customer Complaint Analysis:” and “Step 2: DTC Check, Record and Clearance:”, confirm trouble symptoms. Also, reconfirm trouble symptom by performing test drive and turning steering wheel fully to right and left at stopped vehicle.

Step 6 and 7: Rechecking and Record of DTC
Refer to “DTC Check” for checking procedure.

Step 8: Steering Symptom Diagnosis and P/S System Symptom Diagnosis
Perform basic steering system check according to “Steering Symptom Diagnosis in Section 6A” first. When the end of the flow has been reached, check the parts of the system suspected as a possible cause referring to “P/S System Symptom Diagnosis” and based on symptoms appearing on the vehicle (symptoms obtained through steps of customer complaint analysis, trouble symptom confirmation and/or basic P/S system check) and repair or replace faulty parts, if any.

Step 9: Troubleshooting for DTC (See each DTC Diag. Flow)
Based on the DTC indicated in Step 6 or 7 and referring to the applicable DTC diag. flow, locate the cause of the trouble, namely in a sensor, switch, wire harness, connector, actuator, P/S control module or other part and repair or replace faulty parts.

Step 10: Intermittent Problems Check
Check parts where an intermittent trouble is easy to occur (e.g., wire harness, connector, etc.), referring to “Intermittent and Poor Connection Inspection in Section 00” and related circuit of DTC recorded in Step 2.

Step 11: Final Confirmation Test
Confirm that the problem symptom has gone and the P/S system is free from any abnormal conditions. If what has been repaired is related to the DTC, clear the DTC once, perform DTC confirmation procedure and confirm that no DTC is indicated.

“EPS” Warning Light Check

S7RW0A6304002

1) Turn ignition switch to ON position (but without running engine) and check if the “EPS” warning light (1) lights up. If the light dose not light up, go to ““EPS” Warning Light Does Not Come ON with Ignition Switch Turned ON before Engine Starts” of the diagnostic flows.
2) Start engine and check that “EPS” warning light turns OFF. If light remains ON and no DTC is stored in P/S control module, go to ““EPS” Warning Light Remains ON Steady after Engine Starts” for troubleshooting.

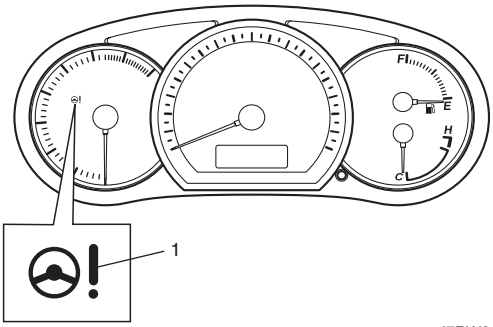

I7RW01632002-01

DTC Check

S7RW0A6304003

1) Turn ignition switch to OFF position.
2) Connect SUZUKI scan tool to data link connector (DLC) (1) located on underside of instrument panel at driver’s seat side.

Special tool
(A): SUZUKI scan tool

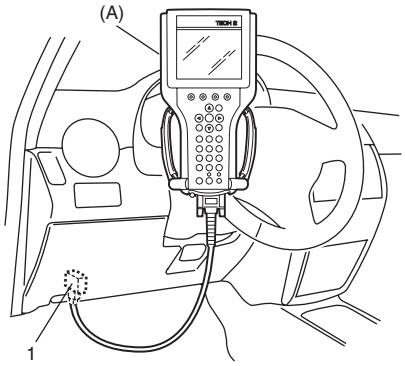

I5RW0A630004-01

3) Start engine.
4) Read DTC according to the instructions displayed on SUZUKI scan tool. For further details, refer to operator’s manual for SUZUKI scan tool.

NOTE

- **If communication between SUZUKI scan tool and the vehicle can not be established, perform “DLC and Its Communication Check (No communication to P/S Control Module)”.**
- **DTC C1122 (engine speed signal failure) is indicated when ignition switch is at ON position and engine is not running, but it means there is nothing abnormal if indication changes to a normal one when engine is started.**

5) After completing the check, turn ignition switch to OFF position and disconnect SUZUKI scan tool from DLC.

DTC Clearance

S7RW0A6304004

1) Turn ignition switch to OFF position.
2) Connect SUZUKI scan tool to data link connector (DLC) (1) located on underside of instrument panel at driver's seat side.

   Special tool
   (A): SUZUKI scan tool

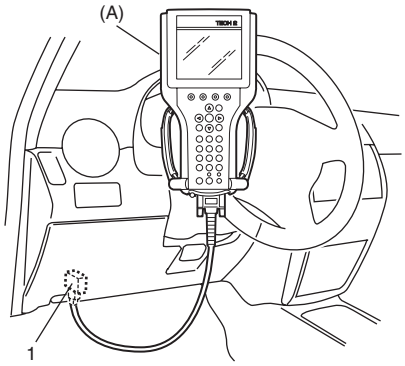

I5RW0A630004-01

3) Turn ignition switch to ON position.
4) Erase DTC according to the instructions displayed on SUZUKI scan tool. For further details, refer to operator's manual for SUZUKI scan tool.
5) After completing the clearance, turn ignition switch to OFF position and disconnect SUZUKI scan tool from DLC.

DTC Table

S7RW0A6304005

⚠ CAUTION

Be sure to perform the "EPS System Check" before starting troubleshooting corresponding to each DTC.

DTC No.	Detecting item	Detecting condition (DTC will set when detecting)	Trouble area	DTC	"EPS" warning light
No CODES	Normal	—	—	—	—
☞ C1111	Steering torque sensor (Main) circuit voltage	Circuit voltage of sensor main is more than 4.5 V or less than 0.5 V	• Torque sensor signal circuit • Torque sensor • P/S control module	1 driving cycle	1 driving cycle
☞ C1113	Steering torque sensor (Main and Sub) circuit correlation	Difference between steering torque calculated based on sensor main signal and steering torque calculated based on sensor sub signal is more than 4.9 N·m or Difference between instantaneous value and average value of steering torque calculated based on sensor main signal and steering torque calculated based on sensor sub signal is more than 2.94 N·m		1 driving cycle	1 driving cycle
☞ C1115	Steering torque sensor (Sub) circuit voltage	Circuit voltage of sensor sub signal is more than 4.5 V or less than 0.5 V		1 driving cycle	1 driving cycle
☞ C1116	Steering torque sensor power supply circuit	Circuit voltage of torque sensor 9 V power supply is less than 7 V	• Torque sensor 9 V power supply circuit • Torque sensor • P/S control module	1 driving cycle	1 driving cycle

DTC No.	Detecting item	Detecting condition (DTC will set when detecting)	Trouble area	DTC	"EPS" warning light
☞ C1121	No vehicle speed signal (60 Seconds or More)	Vehicle speed signal is 0 km/h even though engine speed is more than 4000 rpm for more than 60 seconds continuously (before elapse of 5 min from engine start) or vehicle speed signal is 0 km/h even though engine speed is more than 2500 rpm for more than 60 seconds continuously (after elapse of 5 min for engine start).	• Vehicle speed signal circuit • BCM • ECM • TCM (A/T model) • ABS control module (M/T model) • P/S control module • CAN communication line circuit	1 driving cycle	Does not light up
☞ C1122	Engine speed signal	Engine speed signal is less than 220 rpm for more than 0.8 seconds. or Engine speed signal is less than 220 rpm for more than 20 seconds continuously even though vehicle speed signal is more than 50 km/h.	• Engine speed signal circuit • ECM • P/S control module	1 driving cycle	1 driving cycle
☞ C1123	No vehicle speed signal (30 seconds or more)	Vehicle speed signal is 0 km/h with continuously more than 3 driving cycles even though engine speed is more than 4000 rpm for more than 30 seconds continuously (before elapse of 5 min from engine start) or vehicle speed signal is 0 km/h with continuously more than 3 driving cycles even though engine speed is more than 2500 rpm for more than 30 seconds continuously (after elapse of 5 min for engine start).	• Vehicle speed signal circuit • BCM • ECM • TCM (A/T model) • ABS control module (M/T model) • P/S control module • CAN communication line circuit	3 driving cycle	3 driving cycle
☞ C1124	Vehicle speed performance (impossible deceleration)	Vehicle speed signal is less than 5 km/h for more than 5 seconds continuously with more than specified deceleration speed (–20 m/s^2) from over 20 km/h.		1 driving cycle	Does not light up

DTC No.	Detecting item	Detecting condition (DTC will set when detecting)	Trouble area	DTC	"EPS" warning light
☞ C1141	P/S motor circuit voltage	Voltage between both motor drive circuit is more than 8.5 V or less than 0.2 V for 0.5 second continuously while motor is not driven.	• P/S motor circuit • P/S motor • Torque sensor • P/S control module	1 driving cycle	1 driving cycle
☞ C1142	P/S motor circuit range/ performance	Measured motor drive current is more than 10 A as compared with target motor drive current.		1 driving cycle	1 driving cycle
☞ C1143	P/S motor circuit current too high	Measured motor drive current is more than 65 A.		1 driving cycle	1 driving cycle
☞ C1145	P/S Motor Circuit Current Too Low	Measured motor drive current is less than 2 A continuously for more than 3 seconds even though target motor drive current is more than 4 A. or Measured motor drive current is less than 0.8 A for total 1 second even though motor control duty is more than 90% when target motor drive current is less than 8 A.		1 driving cycle	1 driving cycle
☞ C1153	P/S control module power supply circuit	Power supply voltage of P/S control module is less than 9 V for 5 seconds continuously while engine speed is more than 600 rpm	• P/S control module power supply circuit • Undercharged Battery • Generator • P/S control module	1 driving cycle	1 driving cycle
☞ C1155	P/S control module internal failure	Internal memory (EEPROM) is data error.	• P/S control module	1 driving cycle	Does not light up
		Internal circuit is faulty. or Power supply voltage of P/S control module exceeded 17.5 V	• Generator • P/S control module	1 driving cycle	1 driving cycle

Visual Inspection

S7RW0A6304006

Visually check the following parts and systems.

Inspection Item		Referring section
Battery	Level, leakage, color	"Battery Description in Section 1J"
Connectors of electric wire harness	Disconnection friction	"Intermittent and Poor Connection Inspection in Section 00"
Fuses	Burning	"Cautions in Body Electrical System Servicing in Section 9A"
Parts	Installation, damage	
Other parts that can be checked visually		

Scan Tool Data

S7RW0A6304007

NOTE

When P/S motor is cold condition (that is, armature coil of P/S motor is not heated), normal value with asterisk (*) mark in the following table is displayed on scan tool

Scan tool data	Vehicle condition		Normal condition
☞ Power Supply Voltage	Ignition switch ON		10 – 14 V
☞ Sensor Power Supply			7.4 – 10 V
☞ Sensor (Main) Torque	Engine running at idle speed	Steering wheel at fully turned to left	–10.5 – 0 N·m
		Steering wheel at free	0 N·m
		Steering wheel at fully turned to right	0 – 12.85 N·m
☞ Sensor (Sub) Torque	Engine running at idle speed	Steering wheel at fully turned to left	0 – 10.65 N·m
		Steering wheel at free	0 N·m
		Steering wheel at fully turned to right	–12.85 – 0 N·m
☞ Control Torque	Engine running at idle speed	Steering wheel at fully turned to left	–7.22 – 0 N·m
		Steering wheel at free	0 N·m
		Steering wheel at fully turned to right	0 – 7.16 N·m
☞ Target Motor Current	Engine running at idle speed	Steering wheel at free	0 A
		Steering wheel at fully turned to left or right	*45 – 60 A
☞ Measured MOT Current	Engine running at idle speed	Steering wheel at free	0 A
		Steering wheel at fully turned to left or right	*45 – 60 A
☞ Vehicle Speed	Engine running and vehicle at stop		0 km/h
☞ Engine Speed	Engine running at idle speed after warming up		700 ± 50 rpm
☞ Motor Drive Voltage	Engine running at idle speed	Steering wheel at free	0.8 – 1 V
		Steering wheel at fully turned to right	*5.5 – 8.5 V
☞ System Power Status	Ignition switch ON		ON
☞ IGN switch Status			ON
☞ Torque sensor Status	Engine running at idle speed		ON
☞ Fail Safe FET Status			ON

Scan Tool Data Definitions

Power Supply Voltage

This parameter indicates battery positive voltage.

Sensor Power Supply (Torque Sensor Power Supply, V)

This parameter indicates the power supply voltage which the P/S control module supplies to the torque sensor.

Sensor (Main) Torque (Torque Sensor Main Torque, N·m)

The torque sensor is installed to detect the steering force and the steering direction. It consists of two potentiometers and the main torque sensor is one of these.

Sensor (Sub) Torque (Torque Sensor Sub Torque, N·m)

The torque sensor is installed to detect the steering force and the steering direction. It consists of two potentiometers and the sub-torque sensor is one of these. Its output characteristics are compared with those of the main torque sensor.

Control Torque (N·m)

This parameter is an internal parameter of the P/S control module. It is obtained by computing the torque sensor input signal.

Target Motor Current (Motor Control Current, A)

Based on the input signal, the P/S control module determines the assist amount and controls the current to the motor suitable for that assist amount. This parameter indicates that control value.

Measured MOT Current (Motor Monitor Current, A)

This parameter indicates the actually measured value of the current flowing to the motor. The motor circuit condition is diagnosed by comparing this parameter with “Motor Control” parameter described previously.

Vehicle Speed (km/h, MPH)

Vehicle speed signal is fed from BCM. P/S control module determines the amount of power assist based on this vehicle speed signal and the torque sensor signal.

Engine Speed (rpm)

Engine speed signal is fed from the ECM so that it can be used for trouble diagnosis of the electric power steering system.

Motor Drive Voltage (V)
This parameter indicates the voltage between motor terminals.

System Power Status (EPS System Power, ON, OFF)
This parameter indicates input status of EPS system power supply.

IGN switch Status (ON, OFF)
This parameter indicates the condition of the power supply through the ignition switch.

Torque sensor Status (ON, OFF)
This parameter indicates the output status of the torque sensor power supply.

Fail Safe FET Status (ON, OFF)
This parameter indicates the status of the motor drive power supply circuit.

P/S System Symptom Diagnosis

S7RW0A6304008

This section describes trouble diagnosis of the P/S system parts whose trouble is not indicated by the on-board diagnostic system (self-diagnostic function). When no malfunction is indicated by the on-board diagnostic system (self-diagnosis function) and assuredly those steering basic parts as described in “Steering Symptom Diagnosis in Section 6A” are all in good condition, check the following power steering system parts which may be a possible cause for each symptom of the steering.

Condition	Possible cause	Correction / Reference Item
Steering wheel feels heavy (Perform “Steering Force Check:” before diagnosis.)	Steering wheel installed improperly (twisted)	*Install steering wheel correctly.*
	Poor performance of P/S motor	*Check P/S motor referring to “P/S Motor and Its Circuit Inspection”.*
	Poor performance of torque sensor	*Check torque sensor referring to “Torque Sensor and Its Circuit Inspection”.*
	Steering gear case assembly malfunction	*Replace steering gear case assembly.*
	Poor performance of vehicle speed signal from BCM	*Check vehicle speed signal circuit referring to “DTC C1121 / C1123 / C1124: Vehicle Speed Signal Circuit Failure”.*
Steering wheel feels heavy momentarily when turning it to the left or right	Steering gear case assembly malfunction	*Replace steering gear case assembly.*
Poor recovery from turns	Poor performance of torque sensor	*Check torque sensor referring to “Torque Sensor and Its Circuit Inspection”.*
	Steering gear case assembly malfunction	*Replace steering gear case assembly.*
Vehicle pulls to one side during straight driving	Poor performance of torque sensor	*Check torque sensor referring to “Torque Sensor and Its Circuit Inspection”.*
	Steering gear case assembly malfunction	*Replace steering gear case assembly.*
Abnormal noise	P/S motor (built in steering gear case assembly) malfunction	*Replace steering gear case assembly.*
No idle up	P/S control module faulty	*Check P/S control module referring to “Inspection of P/S Control Module and Its Circuits”.*

DLC and Its Communication Check (No communication to P/S Control Module)

S7RW0A6304009

Wiring Diagram

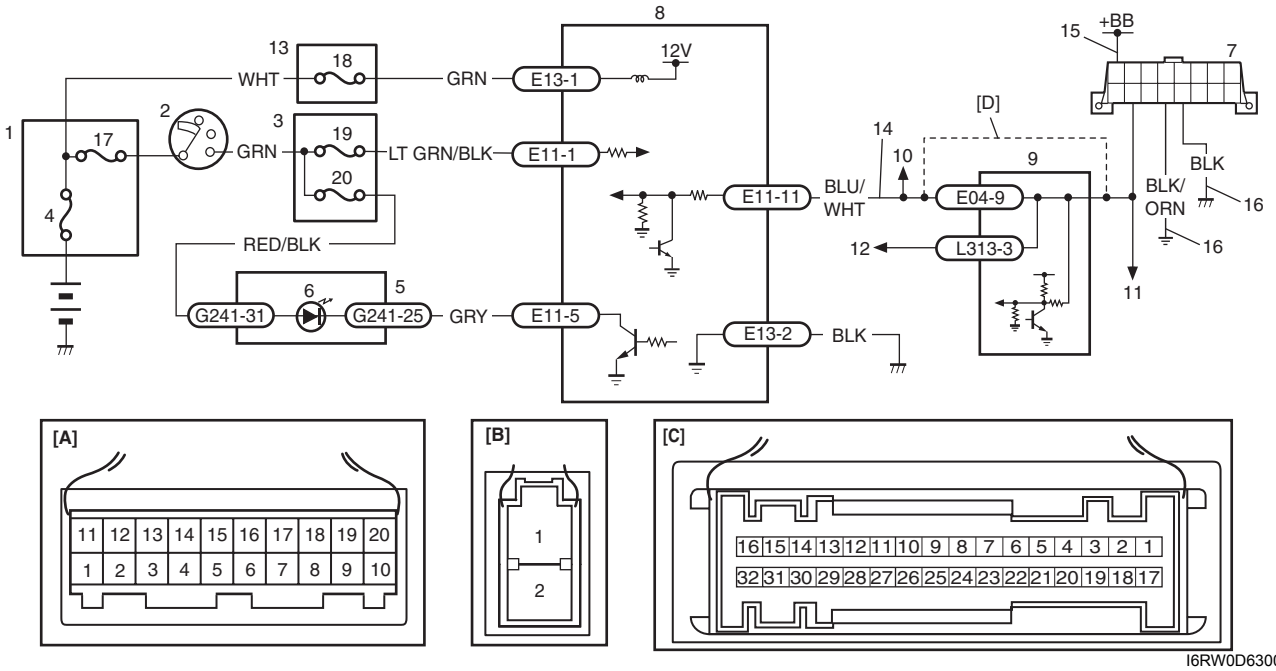

I6RW0D630002-01

[A]: P/S control module connector No.1 “E11” (viewed from harness side)	5. Combination meter	13. Individual circuit fuse box No.1
[B]: P/S control module connector No2 “E13” (viewed from harness side)	6. “EPS” warning light	14. Serial data circuit
[C]: Combination meter connector “G241” (viewed from harness side)	7. Data link connector (DLC)	15. DLC power supply circuit
[D]: Junction block without BCM model (Taiwan model)	8. P/S control module	16. DLC ground circuit
1. Main fuse box	9. BCM	17. “IGN” fuse
2. Ignition switch	10. To HVAC control module	18. “P/S” fuse
3. Junction block assembly	11. To ABS control module	19. “IG1 SIG” fuse
4. Main fuse	12. To SDM	20. “MTR” fuse

Troubleshooting

Step	Action	Yes	No
1	**“EPS” warning light check** 1) Turn ignition switch to ON position. *Does “EPS” warning light turn on?*	Go to step 2.	Go to ““EPS” Warning Light Does Not Come ON with Ignition Switch Turned ON before Engine Starts”.
2	**Scan tool condition check** 1) Make sure that SUZUKI scan tool is as follows. • Correct PCMCIA card (software) is used. • There are no deformation and wear for DLC cable terminals. • Connection for DLC cable terminals is in good condition. *Are they OK?*	Go to step 3.	Repair or replace defective part.

Step	Action	Yes	No
3	**Communication check** 1) Check DLC terminal for deformation and wear. 2) If it is in good condition, connect SUZUKI scan tool to DLC with ignition switch tuned OFF. 3) Check if communication is possible by making communication with other control modules (BCM, ABS, HVAC control module or SDM). *Is it possible to communicate with the other control modules?*	Go to Step 4.	Go to Step 6.
4	**Serial communication circuit check** 1) With ignition switch turned OFF, disconnect “E11” connector from P/S control module and check for proper connection at P/S control module connector terminal. 2) If connections are OK, check that “Serial data circuit” is as follows. • Wiring resistance of “Serial data circuit” wire between DLC connector and P/S control module connector is less than 1 Ω. *Is it resistance less than 1 Ω?*	Go to Step 5.	“Serial data circuit” is open or high resistance.
5	**P/S control module power and ground circuit check** 1) Check power supply circuit and ground circuit for P/S control module referring to “P/S Control Module Power Supply and Ground Circuit Check”. *Is check result in good condition?*	Substitute a known-good P/S control module and recheck.	Repair or replace defective circuit.
6	**DLC power and ground circuit check** 1) Check power supply circuit and ground circuit for DLC connector as follows. • Voltage of “DLC connector power supply circuit” between DLC connector terminal and vehicle body ground is 10 –14 V with ignition switch turned ON. • Wire resistance of each “DLC connector ground circuit” between DLC connector terminal and vehicle body ground is less than 1 Ω. *Is check result in good condition?*	Go to Step 7.	Repair or replace defective circuit.
7	**Serial communication circuit check** 1) With ignition switch turned OFF, disconnect “E11” connector from P/S control module and check for terminal to P/S control module connector. 2) If connections are OK, check that “Serial data circuit” is as follows. • Insulation resistance of “Serial data circuit” wire is infinity between its terminal and other terminals at P/S control module connector. • Insulation resistance of “Serial data circuit” wire is infinity between its terminal and vehicle body ground. *Is circuit in good condition?*	Go to Step 8.	Repair or replace defective circuit.

Step	Action	Yes	No
8	**Scan tool operation check** 1) Check if communication is possible by making communication with other vehicles. *Is it possible to communicate with the other vehicle?*	Scan tool is in good condition, check intermittent trouble referring to “Intermittent and Poor Connection Inspection in Section 00”.	Recheck PCMCIA card and DLC cable for faulty condition. If they are OK, scan tool is faulty.

“EPS” Warning Light Does Not Come ON with Ignition Switch Turned ON before Engine Starts

S7RW0A6304010

Wiring Diagram

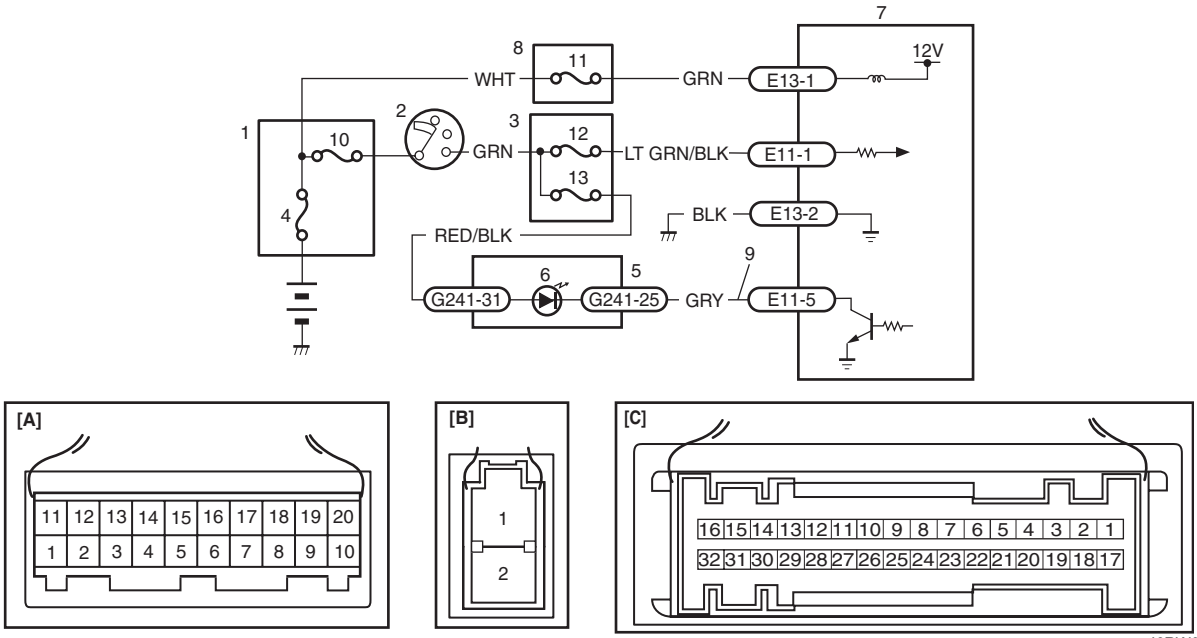

I6RW0C630003-01

[A]: P/S control module connector No.1 “E11” (viewed from harness side)	4. Main fuse	10. “IGN” fuse
[B]: P/S control module connector No.2 “E13” (viewed from harness side)	5. Combination meter	11. “P/S” fuse
[C]: Combination meter connector “G241” (viewed from harness side)	6. “EPS” warning light	12. “IG1 SIG” fuse
1. Main fuse box	7. P/S control module	13. “MTR” fuse
2. Ignition switch	8. Individual circuit fuse box No.1	
3. Junction block assembly	9. “EPS” warning light circuit	

Circuit Description

Operation (ON/OFF) of “EPS” warning light is controlled by P/S control module through combination meter.
If the P/S system is in good condition, P/S control module turns “EPS” warning light ON at the ignition switch ON, and then turns it OFF at the engine start. If an abnormality in the system is detected, “EPS” warning light is turned ON continuously by P/S control module. If P/S control module is disconnected, “EPS” warning light is not turned ON.

Troubleshooting

Step	Action	Yes	No
1	**“EPS” warning light power supply check** 1) Turn ignition switch ON. *Do the other warning light come on?*	Go to Step 2.	“GRN”, “RED/BLK” wire circuit or circuit fuse for combination meter is open or short to ground.
2	**Fuse check** 1) Turn ignition switch OFF. 2) Remove and inspect circuit fuse for P/S control module. *Is fuse in good condition?*	Reinstall fuse, and then go to Step 3.	Check “GRN” wire circuit for short to ground. If OK, replace fuse.
3	**P/S control module power supply and ground circuit check** Check power supply circuit and ground circuit for P/S control module referring to “P/S Control Module Power Supply and Ground Circuit Check”. *Is check result in good condition?*	Go to Step 4.	Repair or replace defective circuit.
4	**Combination meter power supply circuit check** 1) Remove combination meter and disconnect combination meter connector (“G241”) with ignition switch turned OFF. 2) Check for proper connection to the combination meter at “G241-31” terminal. 3) If OK, check voltage between “G241-31” (“RED/BLK” wire) terminal and body ground with ignition switch ON. *Is it 10 – 14 V?*	Go to Step 5.	“RED/BLK” wire circuit is open or short to ground.
5	**“EPS” warning light circuit resistance check** 1) Check for proper connection to the combination meter at “G241-25” terminal and P/S control module at “E11-5” terminal. 2) Check that “EPS warning light circuit” is as follows. • Insulation resistance of “EPS warning light circuit” wire is infinity between its terminal and each terminal at combination meter connector. • Wiring resistance of “EPS warning light circuit” wire is less than 1 Ω. • Insulation resistance of “EPS warning light circuit” wire is infinity between its terminal and vehicle body ground. *Is circuit in good condition?*	“GRY” wire circuit is open.	Go to Step 6.
6	**“EPS” warning light circuit voltage check** 1) Connect combination meter connector (“G241”) with ignition switch turned OFF. 2) Check for voltage between “E11-5” (“GRY” wire) terminal and body ground with ignition switch ON. *Is it 10 – 14 V?*	Replace the P/S control module.	Replace the combination meter.

“EPS” Warning Light Remains ON Steady after Engine Starts

S7RW0A6304011

Wiring Diagram

Refer to ““EPS” Warning Light Does Not Come ON with Ignition Switch Turned ON before Engine Starts”.

Circuit Description

Operation (ON/OFF) of “EPS” warning light is controlled by P/S control module through combination meter.
If the P/S system is in good condition, P/S control module turns “EPS” warning light ON at the ignition switch ON, and then turns it OFF at the engine start. If an abnormality in the system is detected, “EPS” warning light is turned ON continuously by P/S control module. If P/S control module is disconnected, “EPS” warning light is not turned ON.

Troubleshooting

Step	Action	Yes	No
1	Check DTC referring to “DTC Check”. *Is there any DTC(s) (NO CODES on SUZUKI scan tool)?*	Go to applicable DTC diag. flow.	Go to Step 2.
2	**“EPS” warning light circuit check** 1) With ignition switch turned OFF, disconnect P/S control module connector. 2) Check for proper connection to the P/S control module at “E11-5” terminal. 3) If OK, then turn ignition switch to ON position. *Does “EPS” warning light turn ON?*	Go to Step 3.	Replace P/S control module.
3	**Combination meter ground circuit check** 1) Remove combination meter and disconnect combination meter connector with ignition switch turned OFF. 2) Check combination meter connector for proper connection. 3) If connections are OK, check that “EPS warning light circuit” is as follows. • Insulation resistance of “EPS warning light circuit” wire is infinity between its terminal and each terminal at combination meter connector. • Insulation resistance of “EPS warning light circuit” wire is infinity between its terminal and vehicle body ground. *Is circuit in good condition?*	Replace combination meter.	Repair defective circuit.

DTC C1111 / C1113 / C1115: Torque Sensor Circuit Failure

S7RW0A6304012

DTC C1111: Steering Torque Sensor (Main) Circuit Voltage
DTC C1113: Steering Torque Sensor (Main and Sub) Circuit Correlation
DTC C1115: Steering Torque Sensor (Sub) Circuit Voltage

Wiring Diagram

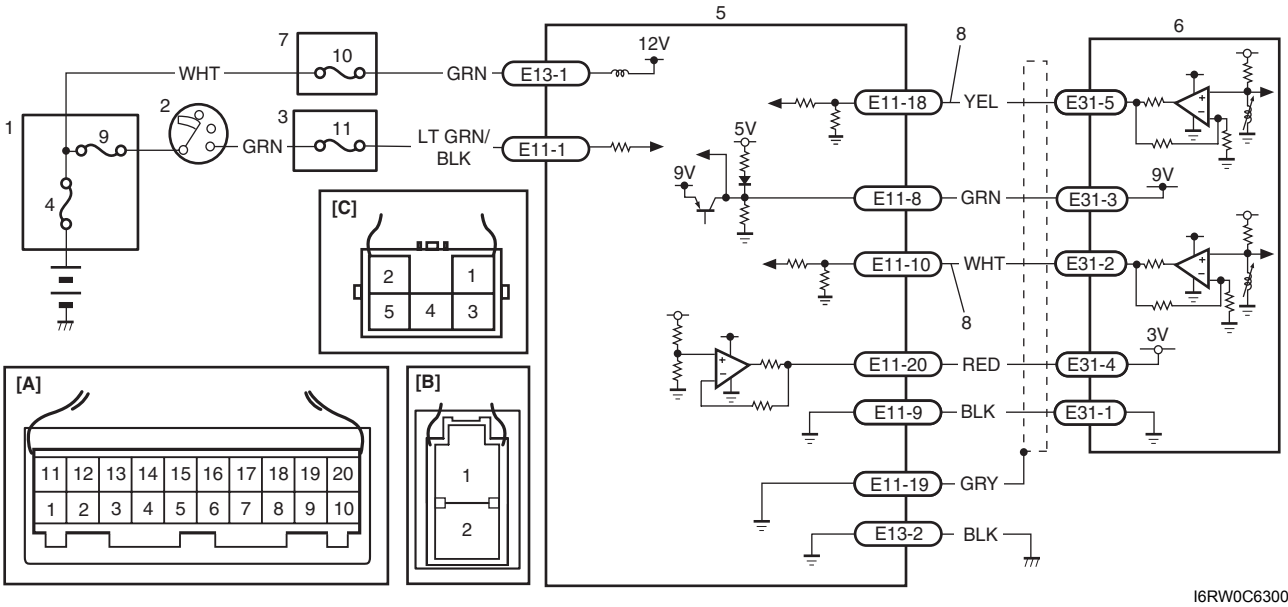

I6RW0C630004-02

[A]: P/S control module connector No.1 “E11” (viewed from harness side)	3. Junction block assembly	8. Torque sensor signal circuit
[B]: P/S control module connector No.2 “E13” (viewed from harness side)	4. Main fuse	9. “IGN” fuse
[C]: Torque sensor connector “E31” (viewed from harness side)	5. P/S control module	10. “P/S” fuse
1. Main fuse box	6. Torque sensor	11. “IG1 SIG” fuse
2. Ignition switch	7. Individual circuit fuse box No.1	

DTC Detecting Condition and Trouble Area

DTC detecting condition	Trouble area
DTC C1111: Circuit voltage of sensor main is more than 4.5 V or less than 0.5 V (1 driving cycle detection logic) **DTC C1113:** Difference between steering torque calculated based on sensor main signal and steering torque calculated based on sensor sub signal is more than 4.9 N·m or Difference between instantaneous value and average value of steering torque calculated based on sensor main signal and steering torque calculated based on sensor sub signal is more than 2.94 N·m (1 driving cycle detection logic) **DTC C1115:** Circuit voltage of sensor sub signal is more than 4.5 V or less than 0.5 V (1 driving cycle detection logic)	• Torque sensor signal circuit • Torque sensor • P/S control module

DTC Troubleshooting

Step	Action	Yes	No
1	*Was "EPS System Check" performed?*	Go to Step 2.	Go to "EPS System Check".
2	**DTC check** *Is DTC C1153 or C1116 indicated, together?*	Go to applicable diag. flow.	Go to Step 3.
3	**Torque sensor signal circuit check** 1) With ignition switch turned OFF, disconnect torque sensor connector. 2) Check for voltage between following terminal with ignition switch ON. • "E11-18" ("YEL" wire) terminal and body ground • "E11-10" ("WHT" wire) terminal and body ground *Is it about 0 V?*	Go to Step 4.	Torque sensor signal circuit is shorted to other circuit.
4	**Torque sensor circuit check** 1) Disconnect P/S control module connector. 2) Check that torque sensor signal circuit is as follows. • Insulation resistance of wire harness is infinity between "Torque sensor signal circuit" terminal and other terminal at torque sensor connector. • Wiring harness resistance of "Torque sensor signal circuit" is less than 1 Ω. • Insulation resistance between "Torque sensor signal circuit" and vehicle body ground is infinity. *Is circuit in good condition?*	Go to Step 5.	Repair or replace defective circuit.
5	**Torque sensor check** 1) Connect connectors to P/S control module and torque sensor with ignition switch turned OFF. 2) Check torque sensor out put voltage referring to "Torque Sensor and Its Circuit Inspection". *Is torque sensor in good condition?*	Substitute a known-good P/S control module and recheck.	Go to Step 6.
6	**P/S control module resistance check** 1) With ignition switch turned OFF, disconnect torque sensor connector. 2) Check for resistance between following terminal with ignition switch ON. • "E11-18" ("YEL" wire) terminal and body ground • "E11-10" ("WHT" wire) terminal and body ground *Is it about 1 kΩ?*	Replace steering gear case.	Replace P/S control module.

DTC C1116: Steering Torque Sensor Power Supply Circuit

S7RW0A6304013

Wiring Diagram

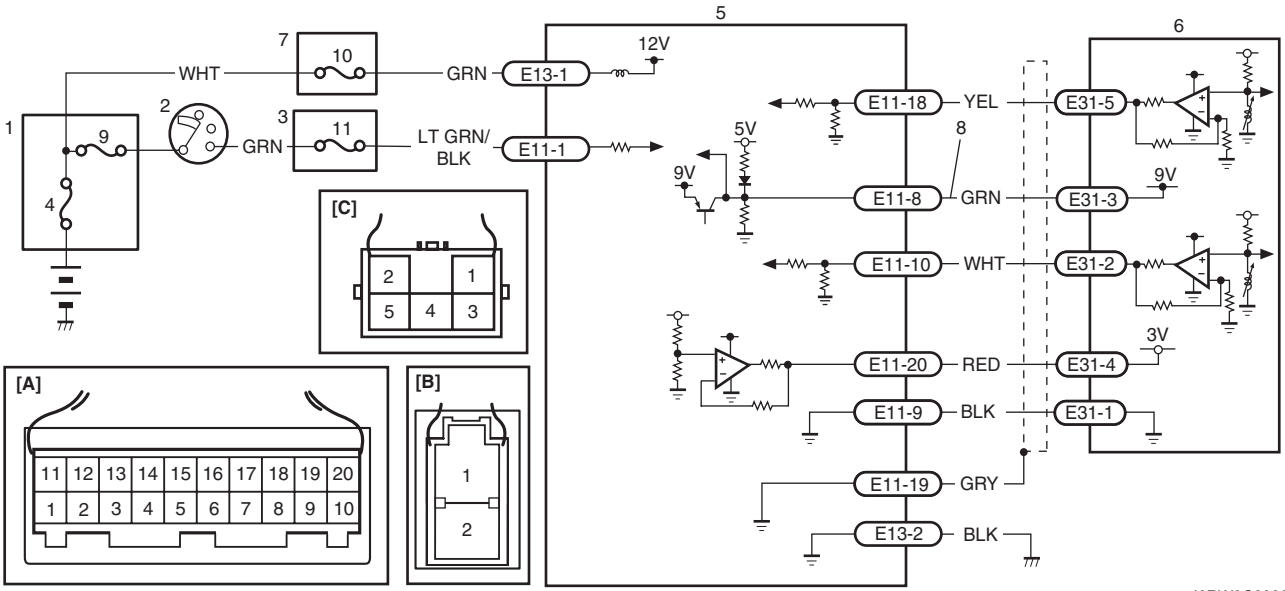

I6RW0C630005-02

[A]: P/S control module connector No.1 “E11” (viewed from harness side)	3. Junction block assembly	8. Torque sensor power supply circuit
[B]: P/S control module connector No.2 “E13” (viewed from harness side)	4. Main fuse	9. “IGN” fuse
[C]: Torque sensor connector “E31” (viewed from harness side)	5. P/S control module	10. “P/S” fuse
1. Main fuse box	6. Torque sensor	11. “IG1 SIG” fuse
2. Ignition switch	7. Individual circuit fuse box No.1	

DTC Detecting Condition and Trouble Area

DTC detecting condition	Trouble area
Circuit voltage of torque sensor 9 V power supply is less than 7 V (1 driving cycle detection logic)	• Torque sensor 9 V power supply circuit • Torque sensor • P/S control module

DTC Troubleshooting

Step	Action	Yes	No
1	*Was “EPS System Check” performed?*	Go to Step 2.	Go to “EPS System Check”.
2	**DTC check** *Is DTC C1153 indicated, together?*	Go to applicable DTC diag. flow.	Go to Step 3.
3	**Torque sensor power supply voltage check** 1) With ignition switch turned OFF, disconnect torque sensor connector. 2) Check for voltage between “E31-3” (“GRN” wire) terminal and body ground with ignition switch ON. *Is it approx. 9 V?*	Go to Step 4.	Go to Step 5.
4	**Torque sensor power supply voltage check** 1) With ignition switch turned OFF, connect torque sensor connector. 2) Check for voltage between “E11-8” (“GRN” wire) terminal and body ground with ignition switch ON. *Is it approx. 9 V?*	Substitute a known-good P/S control module and recheck.	Replace steering gear case.

Step	Action	Yes	No
5	**Torque sensor power supply circuit check** 1) Check that torque sensor power supply circuit is as follows. • Insulation resistance of wire harness is infinity between “Torque sensor power supply circuit” terminal and each other terminal at torque sensor connector. • Wiring harness resistance of “Torque sensor power supply circuit” is less than 1 Ω. • Insulation between “Torque sensor power supply circuit” and vehicle body ground is infinity. *Is circuit in good condition?*	Replace P/S control module.	Repair or replace defective circuit.

DTC C1121 / C1123 / C1124: Vehicle Speed Signal Circuit Failure

S7RW0A6304014

DTC C1121: No Vehicle Speed Signal (60 Seconds or More)
DTC C1123: No Vehicle Speed Signal (30 Seconds or More)
DTC C1124: Vehicle Speed Performance (Impossible Deceleration)

Wiring Diagram

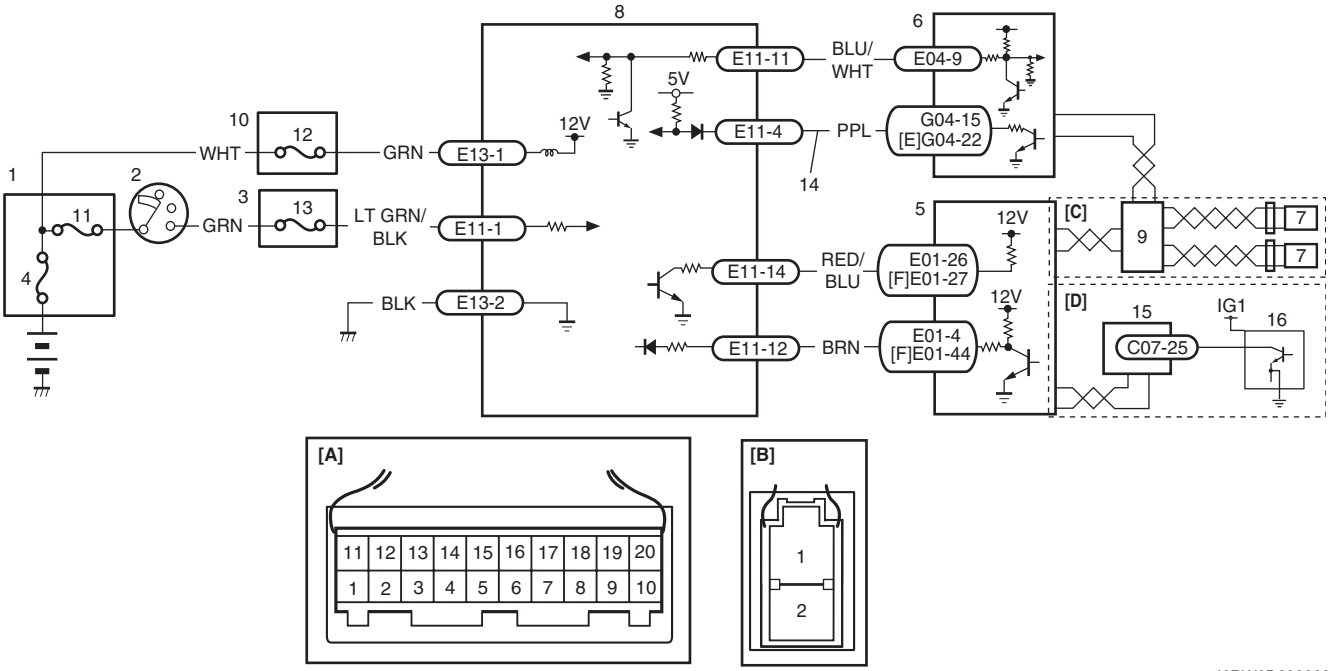

I6RW0D630003-01

[A]: P/S control module connector No.1 “E11” (viewed from harness side)	3. Junction block assembly	11. “IGN” fuse
[B]: P/S control module connector No.2 “E13” (viewed from harness side)	4. Main fuse	12. “P/S” fuse
[C]: M/T model	5. ECM	13. “IG1 SIG” fuse
[D]: A/T model	6. BCM	14. Vehicle speed signal
[E]: Junction block without BCM model (Taiwan model)	7. Front left/right wheel speed sensor	15. TCM
[F]: M15A engine with 4A/T equipped with slip control model (Hong Kong model)	8. P/S control module	16. Output shaft speed sensor
1. Main fuse box	9. ABS control module	
2. Ignition switch	10. Individual circuit fuse box No.1	

DTC Detecting Condition and Trouble Area

DTC detecting condition	Trouble area
DTC C1121: Vehicle speed signal is 0 km/h even though engine speed is more than 4000 rpm for more than 60 seconds continuously (before elapse of 5 min from engine start) or Vehicle speed signal is 0 km/h even though engine speed is more than 2500 rpm for more than 60 seconds continuously (after elapse of 5 min for engine start). (1 driving cycle detection logic but “EPS” warning light does not light up) **DTC C1123:** Vehicle speed signal is 0 km/h with continuously more than 3 driving cycles even though engine speed is more than 4000 rpm for more than 30 seconds continuously (before elapse of 5 min from engine start) or Vehicle speed signal is 0 km/h with continuously more than 3 driving cycles even though engine speed is more than 2500 rpm for more than 30 seconds continuously (after elapse of 5 min for engine start). (3 driving cycle detection logic) **DTC C1124:** Vehicle speed signal is less than 5 km/h for more than 5 seconds continuously with more than specified deceleration speed (–20 m/s^2) from over 20 km/h. (1 driving cycle detection logic but “EPS” warning light does not light up)	• Vehicle speed signal circuit • BCM • ECM • TCM (A/T model) • ABS control module (M/T model) • P/S control module • CAN communication line circuit

DTC Troubleshooting

Step	Action	Yes	No
1	*Was “EPS System Check” performed?*	Go to Step 2.	Go to “EPS System Check”.
2	**DTC check** 1) DTC check for ECM referring to “DTC Check in Section 1A”. *Is there any DTC detected?*	Go to applicable DTC diag. flow.	Go to Step 3.
3	**Vehicle spec check** *Is vehicle equipped with A/T?*	Go to Step 4	Go to Step 5
4	**DTC check** 1) Check TCM for DTC referring to “DTC Check in Section 5A”. *Is there any DTC detected?*	Go to applicable DTC diag. flow.	Go to Step 6.
5	**DTC check** 1) Check ABS control module and BCM for DTC referring to “DTC Check in Section 4E” and “DTC Check in Section 10B”. *Is there any DTC detected?*	Go to applicable DTC diag. flow.	Go to Step 6.

Step	Action	Yes	No
6	**Vehicle speed signal circuit check** 1) With ignition switch turned OFF, disconnect connectors from BCM. 2) Check BCM connector for proper connection. 3) If OK, turn ON ignition switch, measure voltage between “G04-15” or “G04-22” wire terminal of BCM connector and body ground. *Is voltage 4 – 5 V?*	Go to Step 7.	Go to Step 8.
7	**BCM voltage check** 1) With ignition switch turned OFF, connect BCM connector. 2) Check BCM for vehicle speed signal output referring to “Inspection of P/S Control Module and Its Circuits”. *Is it in good condition?*	Replace P/S control module.	Replace BCM.
8	**Vehicle speed signal circuit check** 1) Check that vehicle speed signal circuit is as follows. • Insulation resistance of wire harness is infinity between “Vehicle speed signal” terminal and other terminal at P/S control module connector. • Wiring harness resistance of “Vehicle speed signal” circuit is less than 1Ω. • Insulation resistance between “Vehicle speed signal” circuit and vehicle body ground is infinity. • Circuit voltage between “Vehicle speed signal” circuit and ground circuit is 0 – 1 V with ignition switch turned ON. *Is it in good condition?*	Replace P/S control module.	Repair or replace defective circuit.

DTC C1122: Engine Speed Signal

S7RW0A6304015

Wiring Diagram

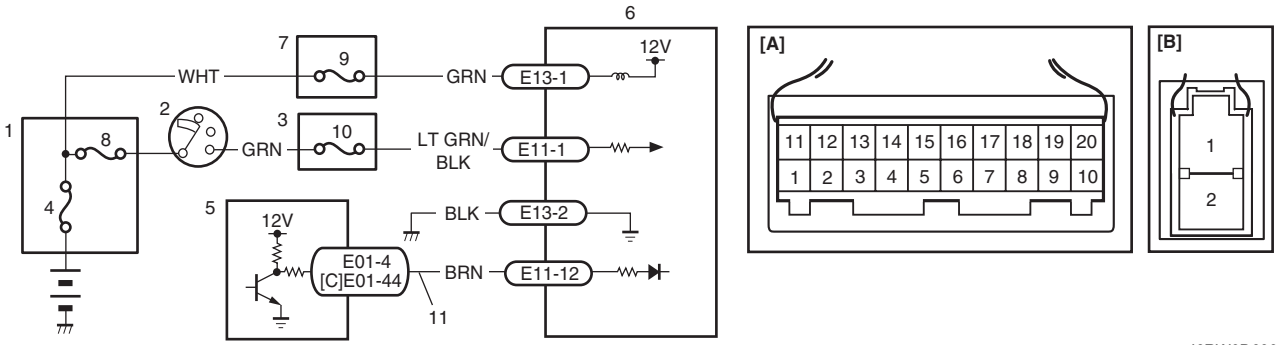

I6RW0D630004-01

[A]: P/S control module connector No.1 “E11” (viewed from harness side)	3. Junction block assembly	8. “IGN” fuse
[B]: P/S control module connector No.2 “E13” (viewed from harness side)	4. Main fuse	9. “P/S” fuse
[C]: M15A engine with 4A/T equipped with slip control model (Hong Kong model)	5. ECM	10. “IG1 SIG” fuse
1. Main fuse box	6. P/S control module	11. Engine speed signal circuit
2. Ignition switch	7. Individual circuit fuse box No.1	

DTC Detecting Condition and Trouble Area

DTC detecting condition	Trouble area
Engine speed signal is less than 220 rpm for more than 0.8 seconds. or Engine speed signal is less than 220 rpm for more than 20 seconds continuously even though vehicle speed signal is more than 50 km/h. (1 driving cycle detection logic)	• Engine speed signal circuit • ECM • P/S control module

DTC Troubleshooting

Step	Action	Yes	No
1	*Was "EPS System Check" performed?*	Go to Step 2.	Go to "EPS System Check".
2	**DTC check** 1) Check ECM for DTC referring to "DTC Check in Section 1A". *Is there any DTC(s) detected?*	Go to applicable DTC diag. flow.	Go to Step 3.
3	**Engine speed signal circuit check** 1) With ignition switch turned OFF, disconnect P/S control module connector. 2) Check P/S control module connector for proper connection. 3) If OK, turn ON ignition switch, measure voltage between "E11-12" wire terminal of P/S control module connector and vehicle body ground. *Is voltage 10 – 14 V?*	Go to Step 4.	Go to Step 5.
4	**ECM voltage check** 1) With ignition switch turned OFF, connect P/S control module and ECM connectors. 2) Check engine speed signal output referring to "Inspection of ECM and Its Circuits in Section 1A". *Is it in good condition?*	Substitute a known-good P/S control module and recheck.	Substitute a known good ECM and recheck.
5	**Engine speed signal circuit check** 1) Disconnect ECM connector. 2) Check that engine speed signal circuit is as follows. • Insulation resistance of wire harness is infinity between "Engine speed signal circuit" terminal and other terminal at P/S control module connector. • Wiring harness resistance of "Engine speed signal circuit" is less than 1Ω. • Insulation resistance between "Engine speed signal circuit" and vehicle body ground is infinity • Circuit voltage between "Engine speed signal circuit" and ground circuit is 0 – 1 V with ignition switch turned ON. *Is it in good condition?*	Substitute a known good ECM and recheck.	Repair or replace defective circuit.

DTC C1141 / C1142 / C1143 / C1145: Motor Circuit Failure

S7RW0A6304016

DTC C1141: P/S Motor Circuit Voltage
DTC C1142: P/S Motor Circuit Range/Performance
DTC C1143: P/S Motor Circuit Current Too High
DTC C1145: P/S Motor Circuit Current Too Low

Wiring Diagram

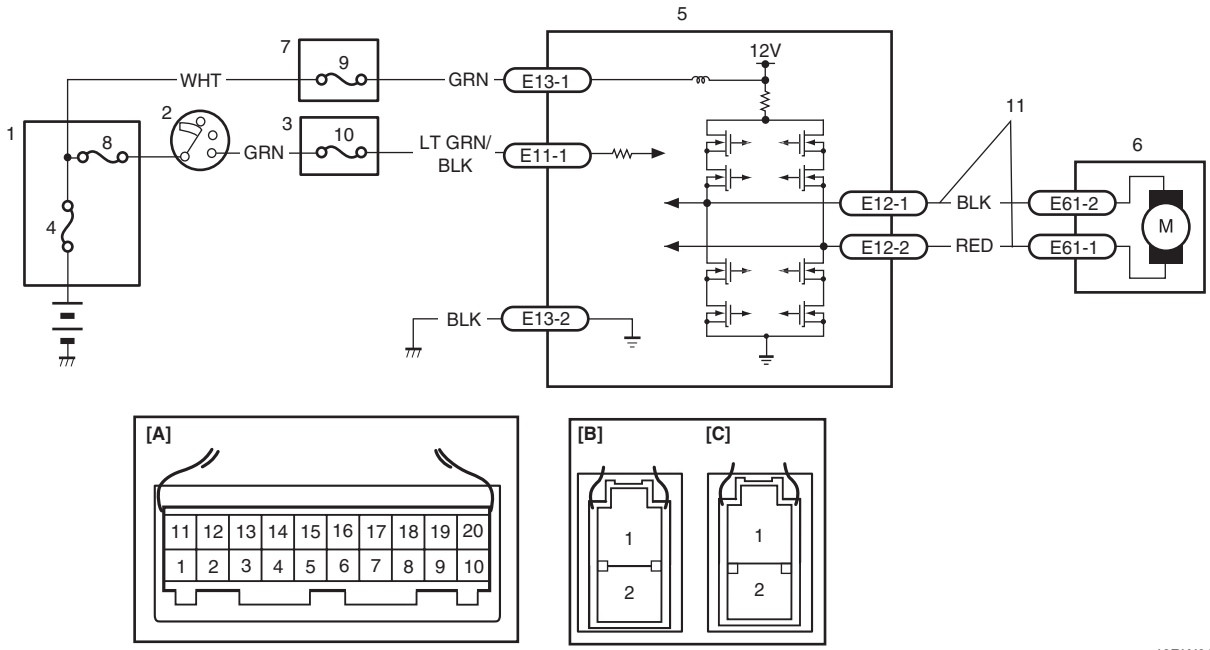

I6RW0C630008-01

[A]: P/S control module connector No.1 “E11” (viewed from harness side)	2. Ignition switch	7. Individual circuit fuse box No.1
[B]: P/S control module connector No.2 “E13” (viewed from harness side)	3. Junction block assembly	8. “IGN” fuse
[C]: P/S control module connector No.3 “E12” (viewed from harness side)	4. Main fuse	9. “P/S” fuse
[D]: Motor connector “E61” (viewed from harness side)	5. P/S control module	10. “IG1 SIG” fuse
1. Main fuse box	6. P/S motor	11. Motor circuit

DTC Detecting Condition and Trouble Area

DTC detecting condition	Trouble area
DTC C1141: Voltage between both motor drive circuit is more than 8.5 V or less than 0.2 V for 0.5 second continuously while motor is not driven. (1 driving cycle detection logic) **DTC C1142:** Measured motor drive current is more than 10 A as compared with target motor drive current. (1 driving cycle detection logic) **DTC C1143:** Measured motor drive current is more than 65 A. (1 driving cycle detection logic) **DTC C1145:** Measured motor drive current is less than 2 A continuously for more than 3 seconds even though target motor drive current is more than 4 A. or Measured motor drive current is less than 0.8 A for total 1 second even though motor control duty is more than 90% when target motor drive current is less than 8 A. (1 driving cycle detection logic)	• P/S motor circuit • P/S motor • Torque sensor • P/S control module

DTC Troubleshooting

Step	Action	Yes	No
1	*Was "EPS System Check" performed?*	Go to Step 2.	Go to "EPS System Check".
2	**DTC check** *Is DTC C1153 and/or C1155 indicated, together?*	Go to applicable DTC diag. flow.	Go to Step 3.
3	**Power supply and ground circuit check** 1) Check P/S control module power supply and ground circuit referring to "P/S Control Module Power Supply and Ground Circuit Check". *Is it in good condition?*	Go to Step 4.	Repair or replace defective circuit.
4	**Motor circuit check** 1) With ignition switch turned OFF, disconnect P/S control module connector No.3 and P/S motor connector. 2) Check P/S control module connector and P/S motor connector for proper connection. 3) If OK, check for open, short and/or high resistance in motor circuit between P/S control module and P/S motor. Refer to "Electrical Circuit Inspection Procedure in Section 00". *Are they in good condition?*	Go to Step 5.	Repair motor circuit.
5	**P/S motor check** 1) Check P/S motor referring to "P/S Motor and Its Circuit Inspection". *Is P/S motor in good condition?*	Substitute a known-good P/S control module and recheck.	Replace the steering gear case assembly and recheck.

DTC C1153: P/S Control Module Power Supply Circuit

S7RW0A6304017

Wiring Diagram

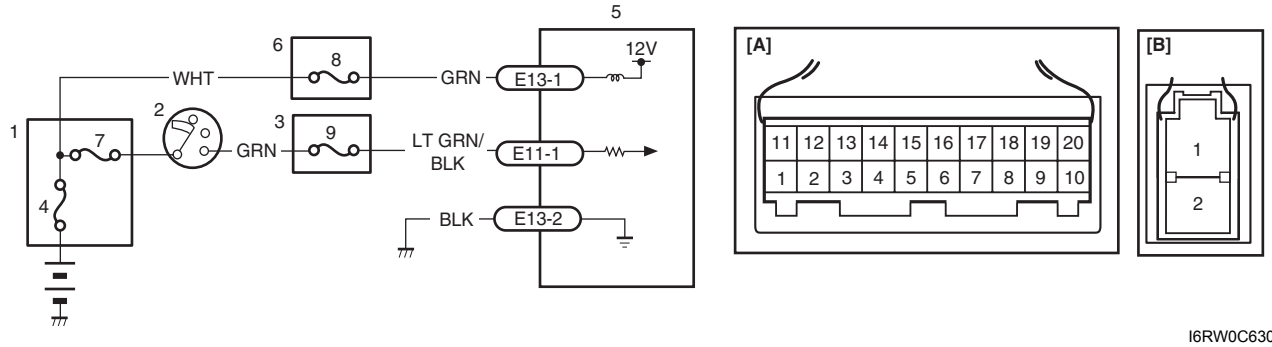

I6RW0C630009-01

[A]: P/S control module connector No.1 "E11" (viewed from harness side)	3. Junction block assembly	7. "IGN" fuse
[B]: P/S control module connector No.2 "E13" (viewed from harness side)	4. Main fuse	8. "P/S" fuse
1. Main fuse box	5. P/S control module	9. "IG1 SIG" fuse
2. Ignition switch	6. Individual circuit fuse box No.1	

DTC Detecting Condition and Trouble Area

DTC detecting condition	Trouble area
Power supply voltage of P/S control module is less than 9 V for 5 seconds continuously while engine speed is more than 600 rpm. (1 driving cycle detection logic)	• P/S control module power supply circuit • Battery • Generator • P/S control module

DTC Troubleshooting

Step	Action	Yes	No
1	*Was "EPS System Check" performed?*	Go to Step 2.	Go to "EPS System Check".
2	**Battery voltage check** 1) Check circuit fuse for P/S control module. 2) If OK, measure voltage between positive (+) battery terminal and vehicle body ground with engine running. *Is voltage 10 V or more?*	Go to Step 3.	Check charging system referring to "Generator Test (Undercharged Battery Check) in Section 1J".
3	**P/S control module power supply circuit check** Check power supply circuit and ground circuit for P/S control module referring to "P/S Control Module Power Supply and Ground Circuit Check". *Is check result in good condition?*	Substitute a known-good P/S control module and recheck.	Repair defective circuit.

DTC C1155: P/S Control Module Internal Failure

S7RW0A6304018

Wiring Diagram

Refer to "DTC C1153: P/S Control Module Power Supply Circuit".

DTC Detecting Condition and Trouble Area

DTC detecting condition	Trouble area
Internal memory (EEPROM) is data error. (In this case, "EPS" warning light does not light up) or Internal circuit is faulty. or Power supply voltage of P/S control module exceeded 17.5 V (1 driving cycle detection logic)	• Generator • P/S control module

DTC Troubleshooting

Step	Action	Yes	No
1	*Was "EPS System Check" performed?*	Go to Step 2.	Go to "EPS System Check".
2	**P/S control module power supply and ground circuit check** Check power supply circuit and ground circuit for P/S control module referring to "P/S Control Module Power Supply and Ground Circuit Check". *Is check result in good condition?*	Go to Step 3.	Repair or replace defective circuit.
3	**Battery voltage check** 1) Check voltage between positive (+) battery terminal and vehicle body ground with engine speed at 3000 rpm. *Is voltage 15.5 V or less?*	Replace P/S control module.	Check charging system referring to "Generator Test (Overcharged Battery Check) in Section 1J".

P/S Control Module Power Supply and Ground Circuit Check

S7RW0A6304019

Wiring Diagram

Refer to “DTC C1153: P/S Control Module Power Supply Circuit”.

DTC Troubleshooting

Step	Action	Yes	No
1	**Circuit fuse check** 1) Disconnect P/S control module connector with ignition switch turned OFF. 2) Check for proper connection to P/S control module connector at “E13-1”, “E13-2” and “E11-1” terminals. 3) If OK, check “P/S” fuse and “IG1 SIG” fuse for blowing. *Are “P/S” fuse and “IG1 SIG” fuse in good condition?*	Go to Step 2.	Replace fuse (s) and check for short in circuits connected to fuse(s).
2	**Power supply circuit check** 1) Measure voltage between “E13-1” terminal of P/S control module connector and body ground. *Is voltage 10 – 14 V?*	Go to Step 3.	“GRN” or “WHT” wire is open circuit.
3	**Ignition signal check** 1) Turn ignition switch to ON position. 2) Measure voltage between “E11-1” terminal of P/S control module connector and body ground. *Is voltage 10 – 14 V?*	Go to Step 4.	“LT GRN / BLK” or “GRN” wire is open circuit.
4	**P/S control module ground circuit check** 1) Turn ignition switch to OFF position. 2) Disconnect connectors from P/S control module. 3) Measure resistance between “E13-2” terminals of P/S control module connector and body ground. *Is resistance 1Ω or less?*	Go to Step 5.	“BLK” wire is open or high resistance circuit.
5	**P/S control module ground circuit check** 1) Connect connectors to P/S control module. 2) Start engine. 3) Measure voltage between “E13-2” terminals of P/S control module connector and body ground when steering wheel fully turned to left or right. *Is voltage 0.3 V or less?*	P/S Control Module Power Supply and Ground Circuit is in good condition.	“BLK” wire is high resistance circuit.

Inspection of P/S Control Module and Its Circuits

S7RW0A6304020

The P/S control module and its circuits can be checked at the P/S control module wiring couplers by measuring voltage and resistance.

⚠ CAUTION

P/S control module cannot be checked by itself. It is strictly prohibited to connect voltmeter or ohmmeter to the P/S control module with connectors disconnected from the P/S control module.

Voltage Check

1) Remove console box.
2) Check for voltage at each terminal with connectors connected to the P/S control module.

NOTE

As each terminal voltage is affected by the battery voltage, confirm if the battery voltage is 11 V or more when ignition switch is ON.

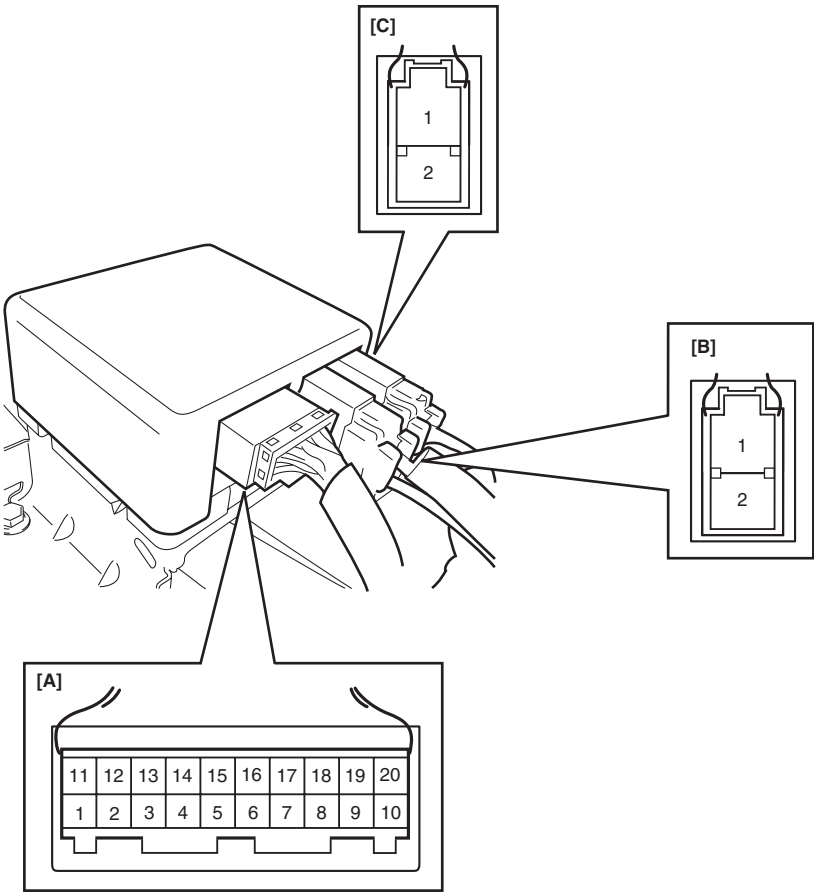

I7RW01632020-01

[A]:	P/S control module connector No.1 “E11” (viewed from harness side)
[B]:	P/S control module connector No.2 “E13” (viewed from harness side)
[C]:	P/S control module connector No.3 “E12” (viewed from harness side)

Terminal	Wire color	Circuit	Normal voltage	Condition
E11-1	LT GRN/BLK	Ignition switch signal for P/S control module	10 – 14 V	Ignition switch ON
E11-2	—	—	—	—
E11-3	—	—	—	—
E11-4	PPL	Vehicle speed signal	*0 – 1 V ↑↓ 8 – 14 V (“Reference waveform No.7” under “Inspection of BCM and Its Circuits in Section 10B”)	• Ignition switch ON • Front left tire turned quickly with right tire locked
E11-5	GRY	“EPS” warning light	0 V	Ignition switch ON
			0 – 14 V	Engine running
E11-6	—	—	—	—
E11-7	—	—	—	—
E11-8	GRN	9 V power supply for torque sensor	About 9 V	• Ignition switch ON • Voltage between “E11-8” and “E11-9” terminals
E11-9	BLK	Ground for torque sensors	—	—
E11-10	WHT	Torque sensor signal (Sub)	About 2.5 – 4.0 V	• Steering wheel with left turn • Out put voltage varies linearly depending on steering force
			About 2.5 V	Steering wheel at free
			About 1.0 – 2.5 V	• Steering wheel with right turn • Out put voltage varies linearly depending on steering force
E11-11	BLU	Serial communication circuit for data link connector	—	—
E11-12	BRN	Engine speed signal	*0 – 1 V ↑↓ 8 – 14 V (“Reference waveform No.24 and No.25” under “Inspection of ECM and Its Circuits in Section 1A”)	Engine idling
E11-13	—	—	—	—
E11-14	RED/BLU	P/S active signal (idle up signal)	About 12 V	Ignition switch ON
			0 – 1 V	Engine idling and turned steering wheel to the right or left until it stops
E11-15	—	—	—	—
E11-16	—	—	—	—
E11-17	—	—	—	—
E11-18	YEL	Torque sensor signal (Main)	About 1.0 – 2.5 V	• Steering wheel with left turn • Out put voltage varies linearly depending on steering force
			About 2.5 V	Steering wheel at free
			About 2.5 – 4.0 V	• Steering wheel with right turn • Out put voltage varies linearly depending on steering force
E11-19	GRY	Ground for shield wire	—	—

Terminal	Wire color	Circuit	Normal voltage	Condition
E11-20	RED	Reference sensor power supply for torque sensor	About 3.0 – 3.5 V	• Ignition switch ON • Check voltage between “E11-20” and “E11-9” terminals
E12-1	BLK	Motor output 1	*0 – 1 V ↑↓ 10 – 14 V (“Reference waveform No.1: ”, “Reference waveform No.2: ” and “Reference waveform No.3: ”)	• Engine idling and steering wheel at straight position • Voltage between “E12-1” and vehicle body ground
E12-2	RED	Motor output 2	*0 – 1 V ↑↓ 10 – 14 V (“Reference waveform No.1: ”, “Reference waveform No.2: ” and “Reference waveform No.3: ”)	• Engine idling and steering wheel at straight position • Voltage between “E12-2” and vehicle body ground
E13-1	GRN	Main power supply for internal memory and P/S motor	10 – 14 V	—
E13-2	BLK	Ground for P/S control module	Below 0.3 V	—

NOTE

***: The voltage of this circuit may not be checked by voltmeter. If so, use oscilloscope.**

Reference waveform No.1

Motor output signal 1(1), Motor output signal 2(2), with engine idling

Measurement terminal	CH1: “E12-1” to vehicle body ground CH1: “E12-2” to vehicle body ground
Oscilloscope setting	CH1: 5 V/DIV, CH2: 5 V/DIV TIME: 20 μs/DIV
Measurement condition	• Engine is idling and steering wheel at straight position

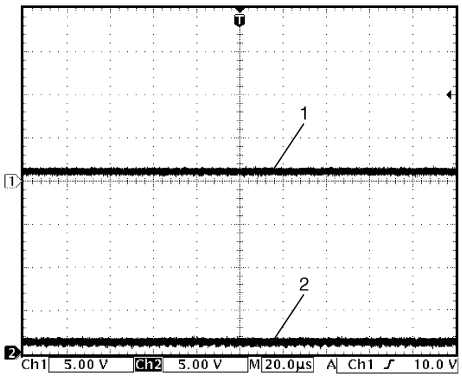

I6RS0B630017-01

Reference waveform No.2

Motor output signal 1(1), Motor output signal 2(2), with engine idling

Measurement terminal	CH1: “E12-1” to vehicle body ground CH1: “E12-2” to vehicle body ground
Oscilloscope setting	CH1: 5 V/DIV, CH2: 5 V/DIV TIME: 20 μs/DIV
Measurement condition	• Engine is idling and steering wheel is turned to left or right at turning speed of 90° /sec

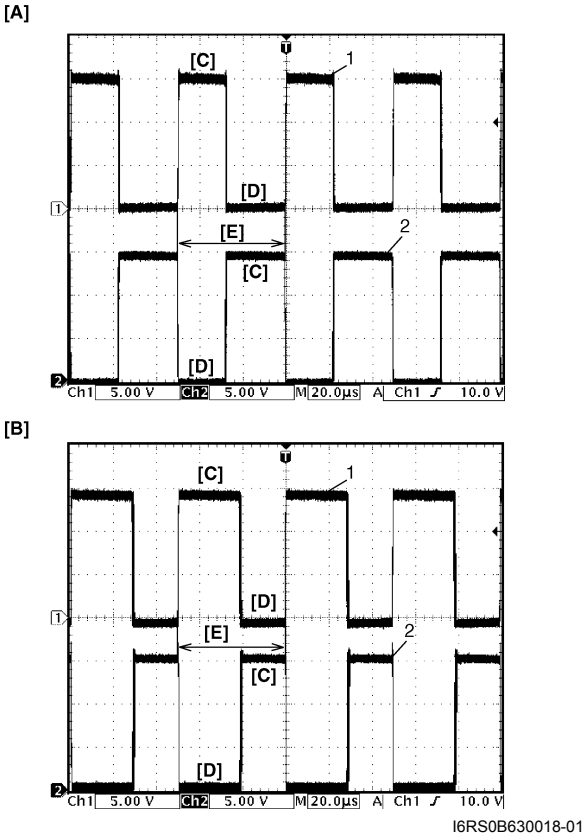

I6RS0B630018-01

[A]:	Steering wheel is turned left at turning speed of 90° /sec
[B]:	Steering wheel is turned right at turning speed of 90° /sec
[C]:	12 V ON
[D]:	GND ON
[E]:	1 duty cycle

Reference waveform No.3

Motor output signal 1(1), Motor output signal 2(2), with engine idling

Measurement terminal	CH1: “E12-1” to vehicle body ground CH1: “E12-2” to vehicle body ground
Oscilloscope setting	CH1: 5 V/DIV, CH2: 5 V/DIV TIME: 20 μs/DIV
Measurement condition	• Engine is idling and steering wheel is kept fully turned to left or right until it stops

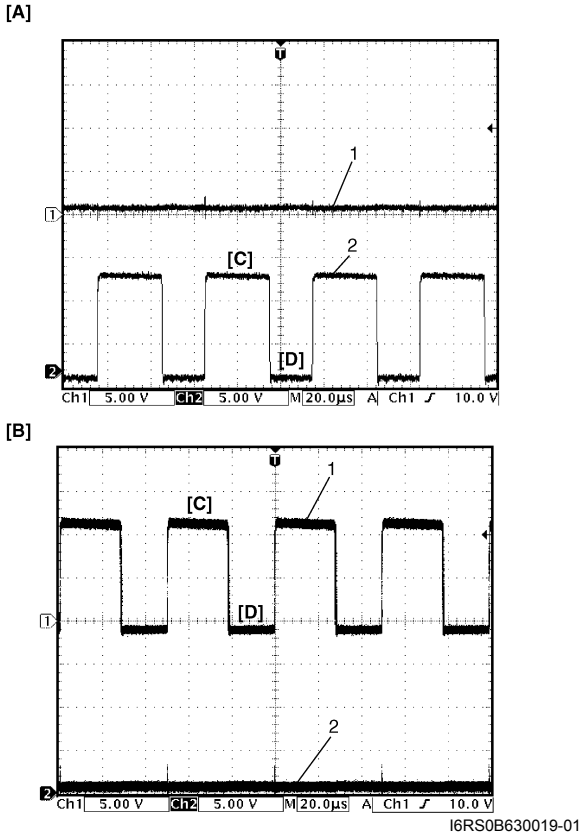

I6RS0B630019-01

[A]:	Steering wheel is kept fully turned left unit it stops
[B]:	Steering wheel is kept fully turned right unit it stops
[C]:	12 V ON
[D]:	GND ON

Steering Wheel Play Check

S7RW0A6304021

- Check steering wheel for looseness or rattle by moving it in its shaft direction and lateral direction. If found defective, repair or replace.
- Check steering wheel for play, holding vehicle in straight forward condition on the ground with engine stopped.
  If steering wheel play is not within specification, inspect as follows and replace if found defective.
  – Tie-rod end ball stud for wear (Ball stud should move when more than 0.2 N·m (2 kg-cm, 0.44 lb-ft) torque is applied.)
  – Lower ball joint for wear
  – Steering shaft joint for wear
  – Steering pinion or rack gear for wear or breakage
  – Each part for looseness

Steering wheel play "a"
: 0 – 30 mm (0 – 1.18 in.)

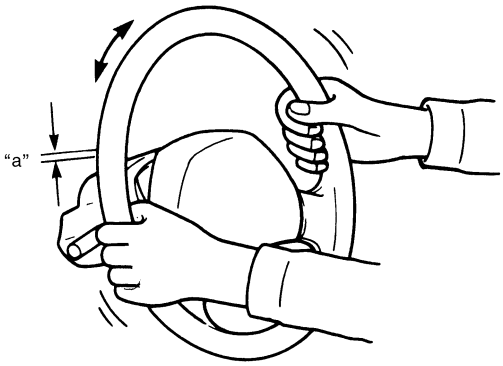

I3RM0A630021-01

Steering Force Check

S7RW0A6304022

1) Place vehicle on level road and set steering wheel at straight-ahead position.
2) Check if tire inflation pressure is as specified referring to the tire placard.
3) Remove driver air bag (inflator) module referring to "Driver Air Bag (Inflator) Module Removal and Installation in Section 8B".
4) Start engine.
5) With engine idling, measure steering force by turning torque wrench.

   Steering force
   : Less than 6.4 N·m (0.64 kgf-m, 4.6 lb-ft)

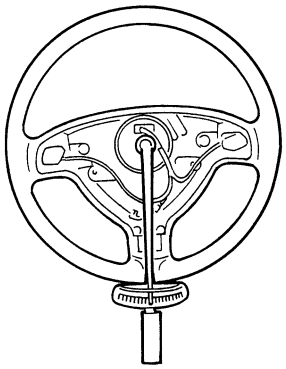

I3RM0A630022-01

6) Install driver air bag (inflator) module referring to "Driver Air Bag (Inflator) Module Removal and Installation in Section 8B".

Repair Instructions

Steering Gear Case Assembly Components

S7RW0A6306001

NOTE

The figure shows left-hand steering vehicle. For right-hand steering vehicle the figure is symmetrical.

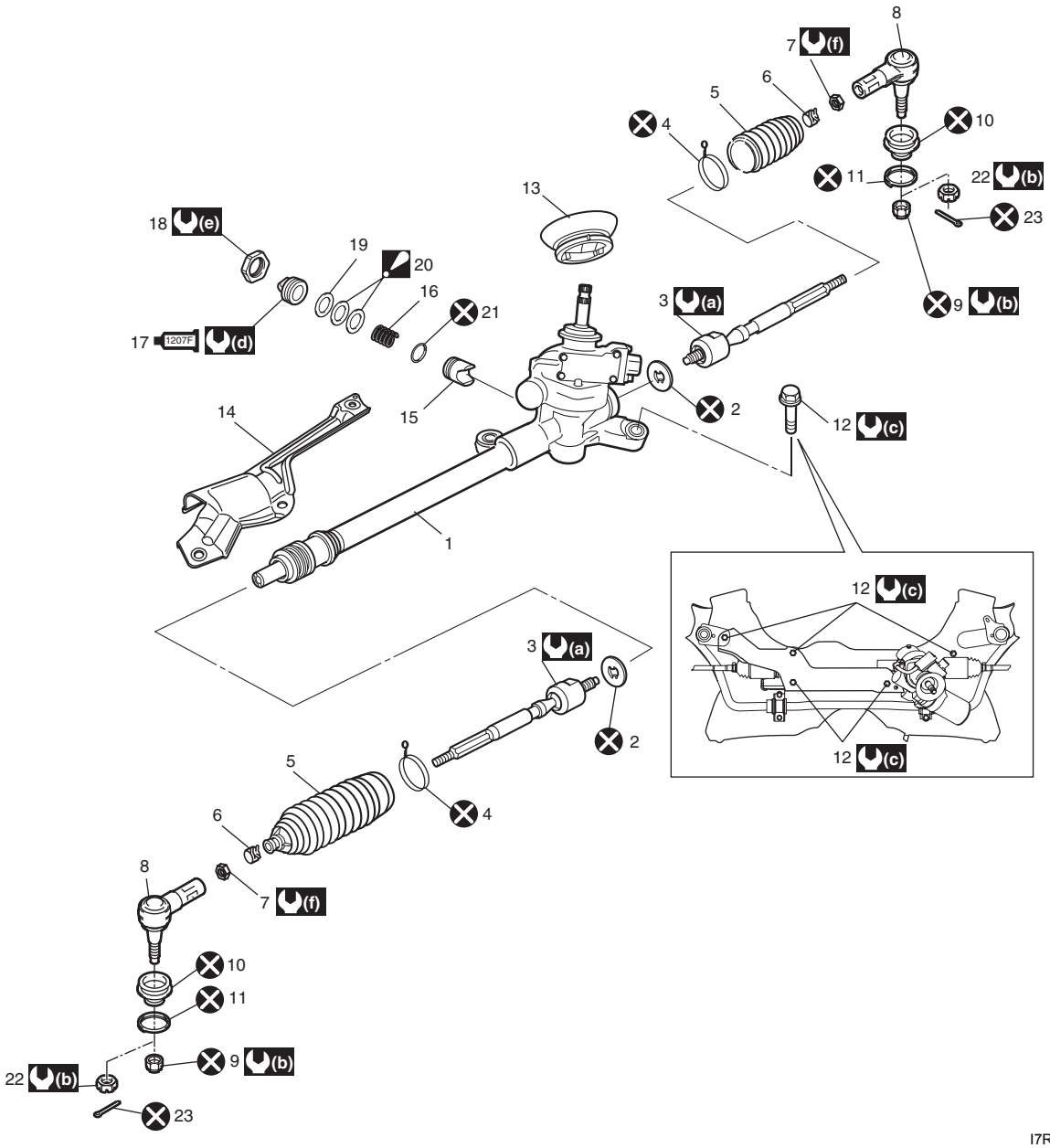

I7RW0A630004-01

1. Steering gear case	11. Clip	21. O-ring
2. Tie-rod lock washer	12. Steering gear case mounting bolt : Refer to “Steering Gear Case Assembly Removal and Installation”.	22. Tie-rod end nut (castle nut)
3. Tie-rod	13. Steering gear case grommet	23: Cotter pin
4. Wire	14. Member bracket	(a) : 75 N·m (7.5 kgf-m, 54.5 lb-ft)
5. Boot	15. Steering rack plunger	(b) : 45 N·m (4.5 kgf-m, 32.5 lb-ft) : Refer to “Tie-Rod End Removal and Installation”.
6. Rack boot clip	16. Steering rack plunger spring	(c) : 70 N·m (7.0 kgf-m, 51.0 lb-ft)
7. Tie-rod end lock nut	1207F 17. Steering rack damper screw : Apply sealant 99000-31250 to all around thread part of rack damper screw.	(d) : Refer to “Steering Rack Plunger Removal and Installation”.
8. Tie-rod end	18. Steering rack damper lock nut	(e) : 60 N·m (6.0 kgf-m, 43.5 lb-ft)

9. Tie-rod end nut (caulking nut)	19. Washer	: 45 N·m (4.5 kgf-m, 32.5 lb-ft)
10. Boot	20. Spring washer : Make sure of the direction of installation referring to “Steering Rack Plunger Removal and Installation”.	: Do not reuse.

Tie-Rod End Boot On-Vehicle Inspection

S7RW0A6306002

Check boot for crack and damage. If any defect is found, replace it with a new one.

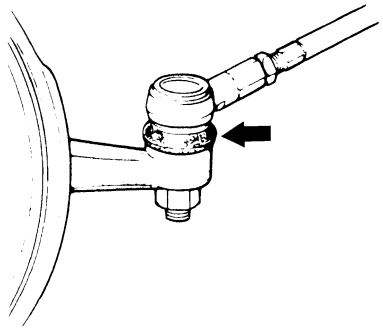

I3RM0A630024-01

Tie-Rod End Removal and Installation

S7RW0A6306003

Removal

1) Hoist vehicle and then remove wheel referring to “Wheel (with Tire) Removal and Installation in Section 2D”.
2) Remove cotter pin (castle nut type) (2) and tie-rod end nut (1) from steering knuckle.

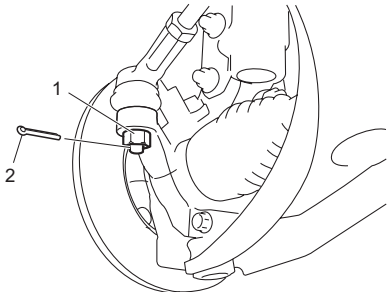

I8RW01631002-01

3) Disconnect tie-rod end (1) from knuckle (2) using puller (3).

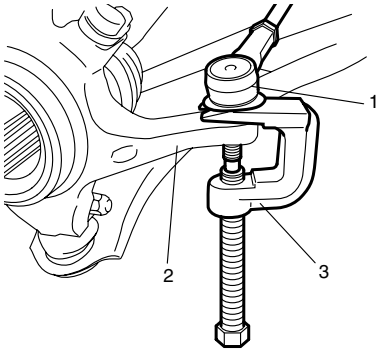

I4RS0A630040-01

4) For ease of adjustment after installation, make marking (1) of tie-rod end lock nut (2) position on tie-rod end thread. Then, loosen lock nut and remove tie-rod end (3) from tie-rod (4).

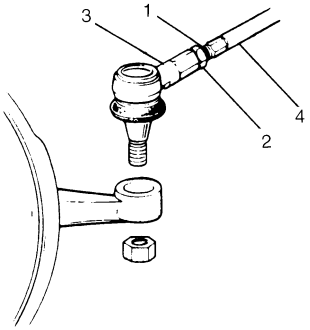

I4RS0A630041-01

Installation

1) Install tie-rod end lock nut (1) and tie-rod end (2) to tie-rod (3). Align lock nut with mark (4) on tie-rod thread.

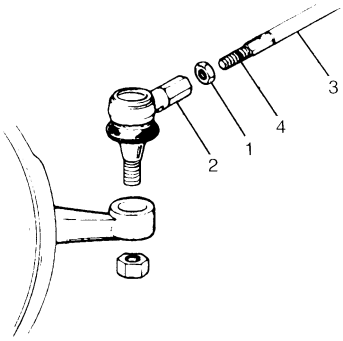

I4RS0A630042-01

2) Connect tie-rod end to knuckle. Tighten tie-rod end nut (1) to specified torque.

Tightening torque
Tie-rod end nut (a): 45 N·m (4.5 kgf-m, 32.5 lb-ft)

3) For castle nut type, bend new cotter pin (2).

NOTE

After tightening tie-rod end nut to specified torque, match next first slot of nut with hole of tie-rod end for insertion of cotter pin (rotation angle 60° max).

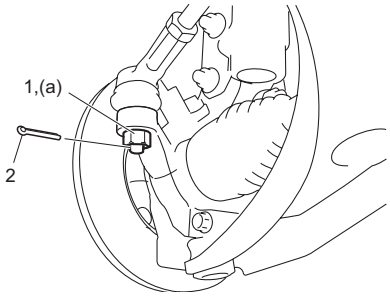

I8RW01631003-01

4) Set tie-rod end initial position referring to “Tie-Rod End Initial Position Setting”.
5) Inspect for proper toe referring to “Front Wheel Alignment Inspection and Adjustment in Section 2B”.
6) After confirming proper toe, tighten tie-rod end lock nut to specified torque.

Tightening torque
Tie-rod end lock nut (a): 45 N·m (4.5 kgf-m, 32.5 lb-ft)

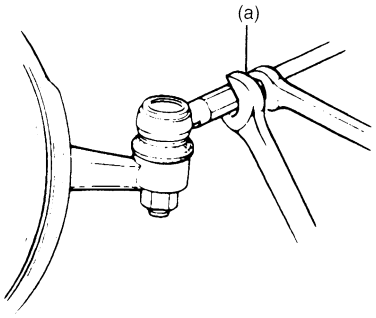

I3RM0A630030-01

7) Tighten wheel nuts to specified torque and lower hoist.

Tightening torque
Wheel nut: 85 N·m (8.5 kgf-m, 61.5 lb-ft)

Tie-Rod End Initial Position Setting

S7RW0A6306014

Set tie-rods to following specified length “A”.

Initial position of tie-rod end “A”
Driver side: Approx. 195 mm (7.68 in.)
Passenger side: Approx. 233 mm (9.17 in.)

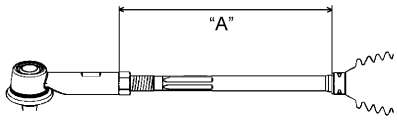

I7RW0A630002-01

Tie-Rod End Inspection

S7RW0A6306004

- Inspect for play in ball joint.
- Inspect for play in rack end ball joint.
  In either case, if found defective, replace.

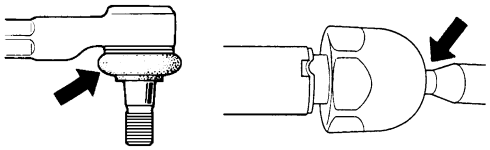

I4RS0A630043-01

Steering Shaft Joint On-Vehicle Inspection

S7RW0A6306005

Check shaft joint for wear, breakage and any other damage and replace if any defect exists.

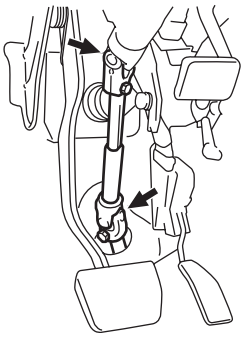

I4RS0B630012-01

Steering Gear Case Assembly Removal and Installation

S7RW0A6306006

Removal

⚠ CAUTION

Be sure to set front wheels (tires) in straight direction and remove ignition key from key cylinder before performing the following steps, otherwise, contact coil of air bag system may get damaged.

1) Remove steering joint cover.
2) Make alignment marks (1) on pinion shaft (2) and joint of steering lower shaft (3) for a guide during reinstallation.
3) Loosen joint bolt (steering column side) (4) and remove joint bolt (pinion shaft side) (5) and disconnect steering lower shaft (3) from pinion shaft (2).

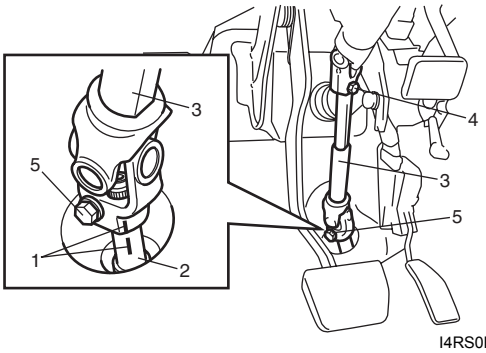

I4RS0B630013-01

4) Disconnect torque sensor connector and P/S motor connector from steering gear case.
5) Remove front suspension frame referring to “Front Suspension Frame, Stabilizer Bar and/or Bush Removal and Installation in Section 2B”, and then remove steering gear case.

Installation

1) Install grommet (1) as shown in figure.

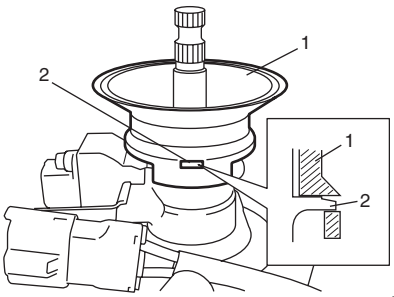

I5RW0A630018-02

2.	Protrusion

2) Install steering gear case to vehicle, and then install front suspension frame referring to “Front Suspension Frame, Stabilizer Bar and/or Bush Removal and Installation in Section 2B”.
3) Install steering gear case to suspension frame (3) as follows.
   a) Set member bracket (2) to steering gear case (1).
   b) Install all steering gear case mounting bolts by hand.
   c) Tighten steering mounting bolts in numerical order and specified torque.

   Tightening torque
   Steering gear case mounting bolt (a): 70 N·m (7.0 kgf-m, 51.0 lb-ft)

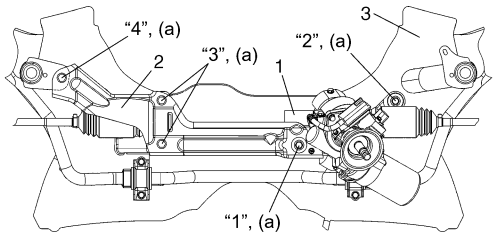

I7RW01632009-01

4) Connect torque sensor connector and P/S motor connector to steering gear case.
5) Be sure that steering wheel and brake discs (right & left) are all straight-ahead position and then insert steering lower shaft (5) into steering pinion shaft (3) with matching marks (4).
6) Tighten steering shaft joint lower bolt (1) and upper bolt (2) to specified torque (tighten lower side first and then tighten upper side).

   Tightening torque
   Steering lower shaft assembly upper joint bolt (a): 25 N·m (2.5 kgf-m, 18.5 lb-ft)
   Steering lower shaft assembly lower joint bolt (b): 25 N·m (2.5 kgf-m, 18.5 lb-ft)

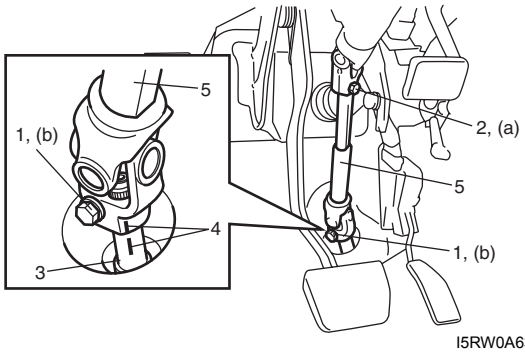

I5RW0A630020-01

7) Install steering joint cover.

Steering Rack Boot Inspection

S7RW0A6306007

Hoist vehicle.
Inspect each boot for tear. A torn boot allows entry of dust and water which can cause wear to steering rack and pinion to produce noise as well as rust to result in malfunction of steering system.
Even if boot tear is small, replace with new one.
Also, check each boot for dent. If there is a dent, keep boot in most compressed state for some seconds to correct dent.
Boots should be visually inspected for any damage, dent and tear during every periodical inspection at specified intervals and whenever vehicle is hoisted for any other purpose.

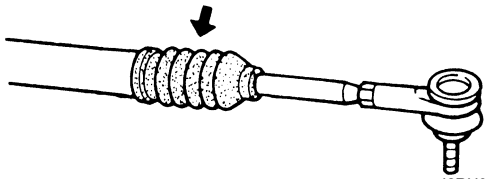

I2RH01630012-01

Tie-Rod / Rack Boot Removal and Installation

S7RW0A6306008

Removal

1) Remove steering gear case assembly referring to “Steering Gear Case Assembly Removal and Installation”.
2) Remove member bracket from steering gear case assembly.
3) For ease of adjustment after installation, make marking (1) of tie-rod end lock nut position of tie-rod thread.

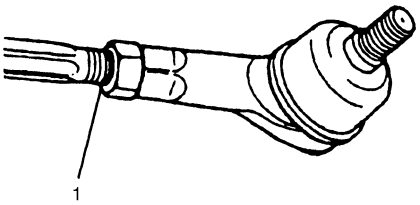

I4RS0A630044-01

4) Loosen tie-rod end lock nut and remove tie-rod end.
5) Remove boot band (2) and clip (1).
6) Remove boot from tie-rod.

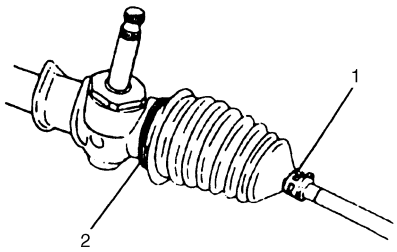

IYSQ01630034-01

7) Unbend bent part of tie-rod lock washer (1).
8) Remove tie-rod (3) from rack (2).

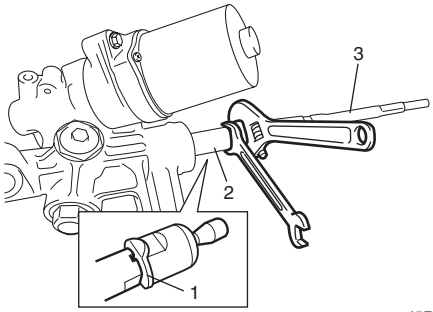

I5RW0A630021-01

Installation

1) Install tie-rod (1) and new tie-rod lock washer (3) to rack (2).
2) Hold rack with soft jawed vise and tighten tie-rod to specified torque.

   Tightening torque
   Tie-rod (a): 75 N·m (7.5 kgf-m, 54.5 lb-ft)

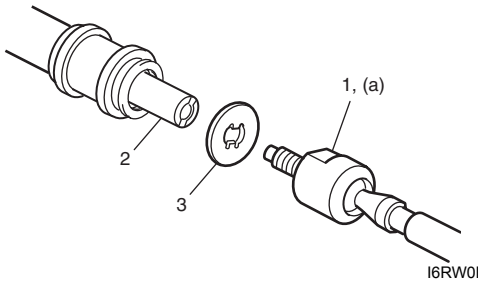

I6RW0B630019-01

3) Bend lock washer at 2 places (1) as shown in figure.

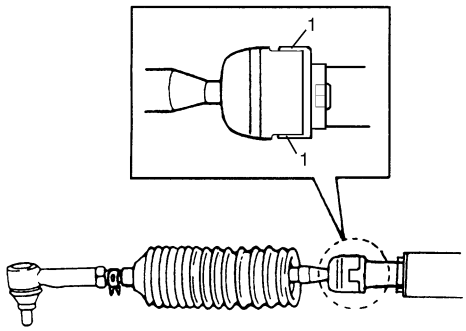

I4RS0A630035-01

4) Apply grease “A” to boot inside as shown in figure. Position boot properly in grooves of gear case (or rack side mount) and tie-rod.
   After this, check to ensure that boot is free from twist and dent.

   “A”: Grease 99000–25050 (SUZUKI Super Grease E)

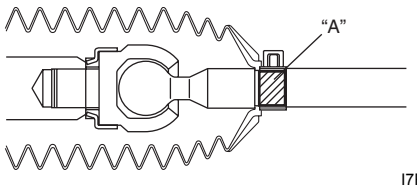

I7RW01632010-01

5) Clamp boot with clip and wire. Wire should be new and should go around the boot twice.
Pull its both ends together by screwdriver or such and make sure that the wire won't be crossed. Then twist the ends 4 – 5 times, the twisted ends should be bent in the circumferential direction.

NOTE

After clamping, make sure that the boot installation part is fixed.
If the boot turns easily by hand, tighten with higher torque to fix it firmly.

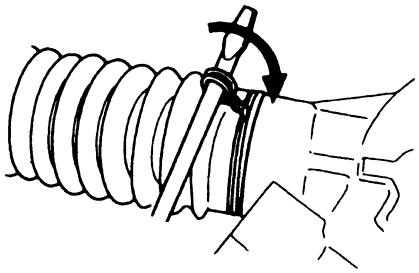

IYSQ01630035-01

6) Install tie-rod end lock nut and tie-rod end to tie-rod. Position lock nut to marking (1) made in removal.

NOTE

When tie-rod was replaced, measure length "a" on removed tie-rod and use it on new replacement tie-rod so as to position lock nut properly.

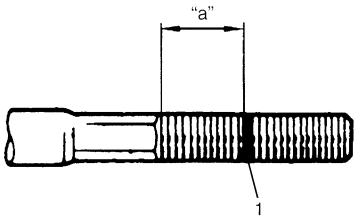

I3RM0A630052-01

7) Tighten tie-rod end lock nut to specified torque.

Tightening torque
Tie-rod end lock nut (a): 45 N·m (4.5 kgf-m, 32.5 lb-ft)

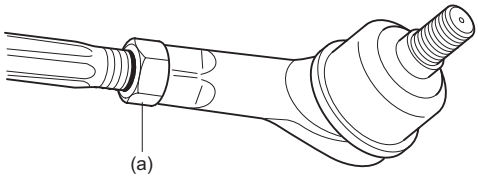

I8RW01631004-01

8) Install member bracket (1), and then install earth cable (2) as shown in figure.

Angle "a"
: Within 20°

Tightening torque
Earth cable bolt (a): 4.0 N·m (0.4 kgf-m, 2.8 lb-ft)

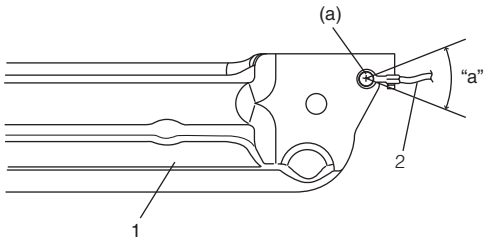

I6RW0C630011-01

Steering Rack Plunger Removal and Installation

S7RW0A6306009

Removal

1) Loosen lock nut (1) with holding damper screw (2).
2) Remove lock nut (1), rack damper screw (2), rack plunger spring (3), washer (5), spring washers (6), O-ring (7) and rack plunger (4).

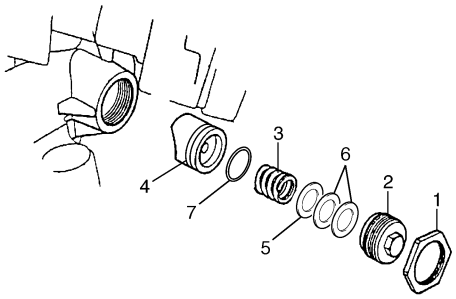

I5RW0A630024-02

Installation

1) Install plunger (1), new O-ring (6), washer (4), spring washers (5) and spring (2) as shown.

NOTE

Do not wipe off grease previously applied to new plunger.

2) Apply sealant to rack damper screw (3) and tighten them as follows.
   a) Tighten damper screw to 25 N·m (2.5 kgf-m, 18.0 lb-ft).
   b) Loosen damper screw until 180°.
   c) Retighten damper screw to 3.9 N·m (0.39 kgf-m, 3.0 lb-ft).
   d) After tightening rack damper screw to specified torque, turn it back by 10° or less.

   "A": Water tight sealant 99000–31250 (SUZUKI Bond No.1207F)

   Tightening torque
   Rack damper screw (a): Tighten 25 N·m (2.5 kgf-m, 18.0 lb-ft) and loosen 180° and then tighten 3.9 N·m (0.39 kgf-m, 3.0 lb-ft) and turn it back by 10° or less by the specified procedure.

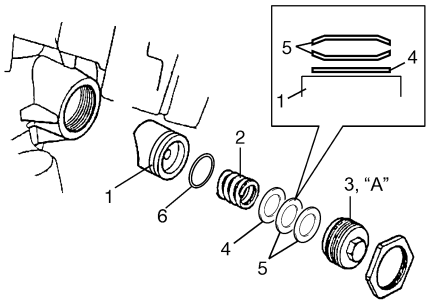

I5RW0A630025-03

3) Pinion rotation torque should be checked with rack position centered.
   Also, check if rack as a whole moves smoothly.

   Special tool
   (A): 09944–18220

   Tightening torque
   Rotation torque of pinion (a): 2.2 N·m (0.22 kgf-m, 1.5 lb-ft)

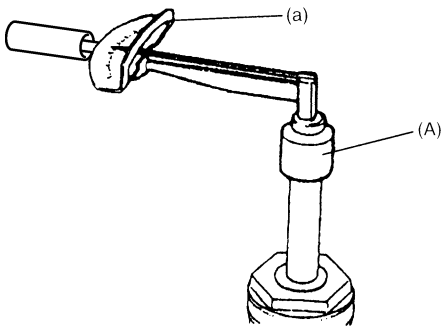

I3RM0A630055-02

4) After adjustment, tighten lock nut to specified torque with holding damper screw at the position.

   Tightening torque
   Steering rack damper lock nut: 60 N·m (6.0 kgf-m, 43.5 lb-ft)

Steering Rack Plunger Inspection

S7RW0A6306010

NOTE

Do not wipe off grease applied to rack plunger which is removed.

- Inspect rack plunger (1) for wear or damage.
- Inspect rack plunger spring (2) for deterioration.
  If any abnormality is found, replace.

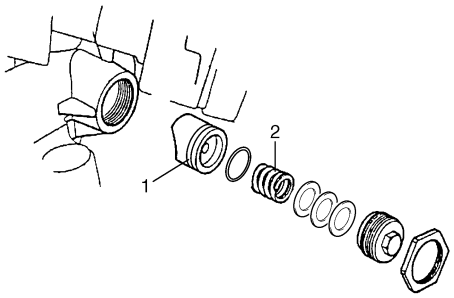

I5RW0A630026-02

P/S Control Module Removal and Installation

S7RW0A6306011

Removal

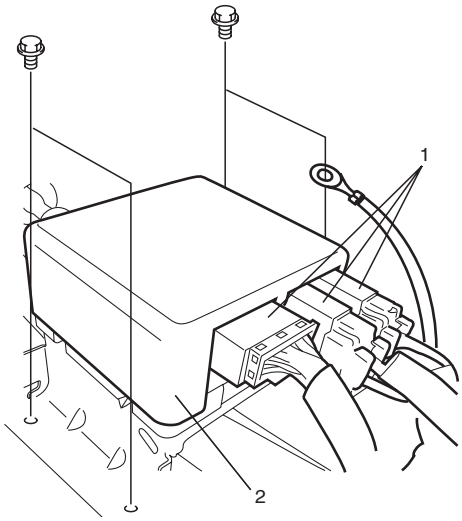

I5RW0A630027-01

1) Disconnect negative cable at battery.
2) Remove console box.
3) Disconnect connectors (1) from P/S control module.
4) Remove P/S control module and bracket (2) from floor panel.
5) Separate P/S control module and bracket.

Installation

Reverse removal procedure.

Torque Sensor and Its Circuit Inspection

S7RW0A6306012

1) Check that torque sensor circuit is in good condition referring to Step 2 to 3 of “DTC C1111 / C1113 / C1115: Torque Sensor Circuit Failure”. If check result is not satisfactory, repair torque sensor circuit.
2) Remove console box.
3) With ignition switch turned OFF, connect scan tool to DLC or connect voltage tester between “E11-18” – “E11-9” (main sensor) or “E11-10” – “E11-9” (sub sensor) with connected connector to P/S control module.

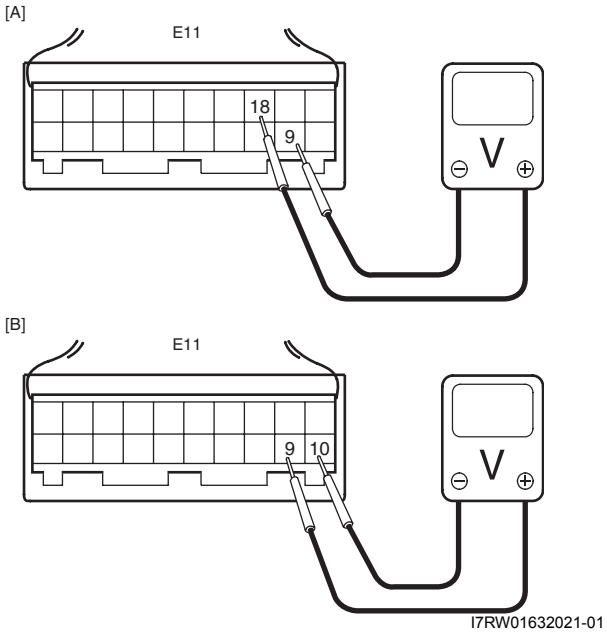

[A]: Main sensor	[B]: Sub sensor

4) Set torque wrench to steering wheel referring to “Steering Force Check” for checking steering force.

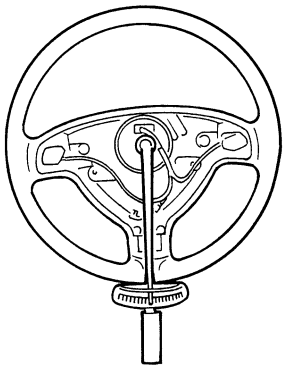

5) Turn ON ignition switch without engine running and select scan tool “Data List” mode due to checking “Sensor (Main) Torque” and “Sensor (Sub) Torque” displayed on scan tool when steering wheel turned left and right (if used).
6) Check that characteristic of torque sensor (main and sub) output voltage or scan tool data and steering force is as following graph when steering wheel is turned left and right. If sensor voltage or scan tool data is out of specified value or does not vary linearly as the following graph, check EPS control module and its circuit referring to “Inspection of P/S Control Module and Its Circuits”.
   If they are OK, replace steering gear case assembly.

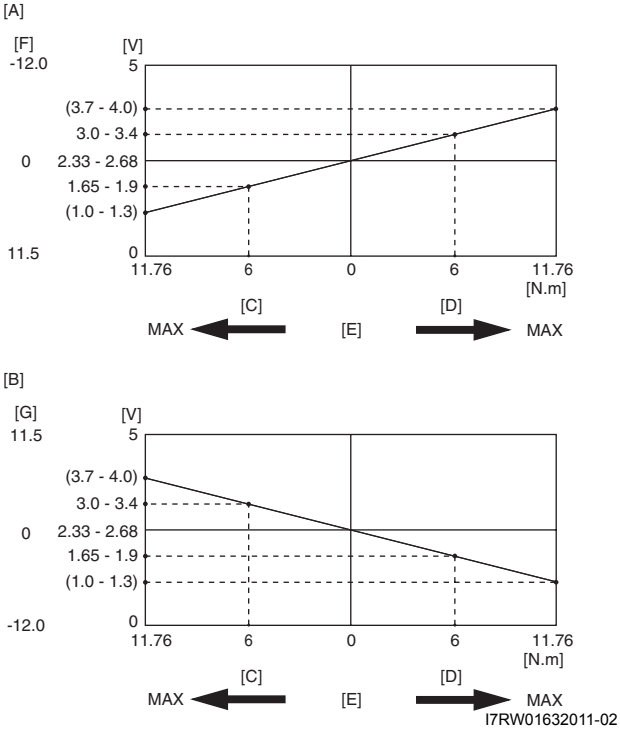

[A]:	Main sensor
[B]:	Sub sensor
[C]:	Steering force at left turn
[D]:	Steering force at right turn
[E]:	Steering wheel at free
[F]:	“Sensor (Main) Torque” in “Data List” displayed on scan tool
[G]:	“Sensor (Sub) Torque” in “Data List” displayed on scan tool

P/S Motor and Its Circuit Inspection

S7RW0A6306013

1) Check motor circuit referring to Step 2 to 3 of “DTC C1141 / C1142 / C1143 / C1145: Motor Circuit Failure”. If check result is not satisfactory, repair motor circuit.
2) Disconnect motor connector from steering gear case assembly with ignition switch turned OFF.
3) Check for resistance between terminals of motor connector.
   If check result is not as specified, check P/S motor harness for continuity. If it is OK, replace steering gear case assembly.

Motor circuit resistance

“E12-1” and “E12-2” (For motor)	**Approx. 1 Ω**

4) Check for insulation between each terminal of motor connector and body ground.
   If check result is not as specified, check P/S motor harness for insulation. If it is OK, replace steering gear case assembly.

Motor circuit resistance

Each terminal and body ground	**No continuity**

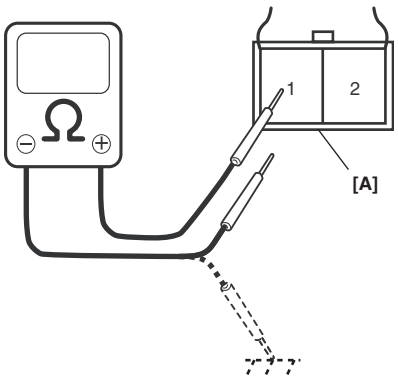

I6RW0C630012-02

[A]: Motor connector “E12” (viewed from harness side)

5) Hoist vehicle
6) Check that steering wheel turns to left and right smoothly. If steering wheel does not turn smoothly, inspect and repair defective steering and suspension parts.
7) Connect “E12” connector with ignition switch turned OFF.
8) Using ammeter (2), check that P/S motor current (1) is as following table with idling engine. If check result is not satisfactory, check P/S control module for torque sensor signal and P/S motor output referring to “Inspection of P/S Control Module and Its Circuits”. If they are OK, replace steering gear case assembly.

NOTE

When P/S motor is cold condition (that is, armature coil of P/S motor is not heated), motor current in the following table can be measured

Motor current at hoisted vehicle (reference value)

Condition	When steering wheel is left at straight position: [A]	When steering wheel is turned left or right by turning speed with 90° /sec: [B]	When steering wheel is kept fully turned left or right until it stops.: [C]
Motor current	Approx. 0 A	Approx. 0 – 5 A	Approx. 45 – 60 A

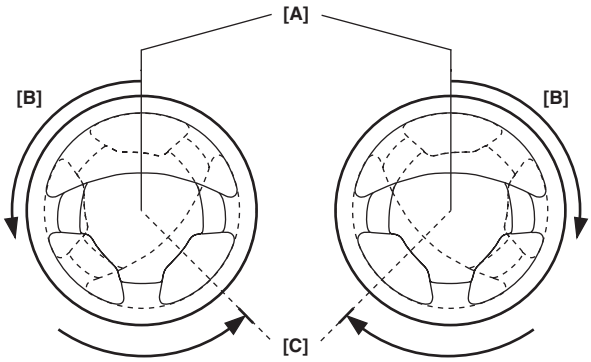

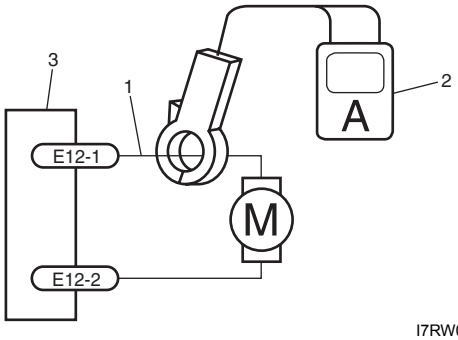

I7RW01632012-01

3. P/S control module

Specifications

Tightening Torque Specifications

S7RW0A6307001

Fastening part	Tightening torque			Note
	N·m	kgf-m	lb-ft	
Tie-rod end nut	45	4.5	32.5	☞
Tie-rod end lock nut	45	4.5	32.5	☞ / ☞
Wheel nut	85	8.5	61.5	☞
Steering gear case mounting bolt	70	7.0	51.0	☞
Steering lower shaft assembly upper joint bolt	25	2.5	18.5	☞
Steering lower shaft assembly lower joint bolt	25	2.5	18.5	☞
Tie-rod	75	7.5	54.5	☞
Earth cable bolt	4.0	0.4	2.8	☞
Rack damper screw	Tighten 25 N·m (2.5 kgf-m, 18.0 lb-ft) and loosen 180° and then tighten 3.9 N·m (0.39 kgf-m, 3.0 lb-ft) and turn it back by 10° or less by the specified procedure.			☞
Rotation torque of pinion	2.2	0.22	1.5	☞
Steering rack damper lock nut	60	6.0	43.5	☞

NOTE

The specified tightening torque is also described in the following.
“Steering Gear Case Assembly Components”

Reference:
For the tightening torque of fastener not specified in this section, refer to “Fasteners Information in Section 0A”.

Special Tools and Equipment

Recommended Service Material

S7RW0A6308001

Material	SUZUKI recommended product or Specification		Note
Grease	SUZUKI Super Grease E	P/No.: 99000–25050	☞
Water tight sealant	SUZUKI Bond No.1207F	P/No.: 99000–31250	☞

NOTE

Required service material is also described in the following.
“Steering Gear Case Assembly Components”

Special Tool

S7RW0A6308002

09944–18220 Pinion torque checking socket ☞		SUZUKI scan tool — This kit includes following items. 1. Tech 2, 2. PCMCIA card, 3. DLC cable, 4. SAE 16/19 adapter, 5. Cigarette cable, 6. DLC loop back adapter, 7. Battery power cable, 8. RS232 cable, 9. RS232 adapter, 10. RS232 loop back connector, 11. Storage case, 12.☞ / ☞	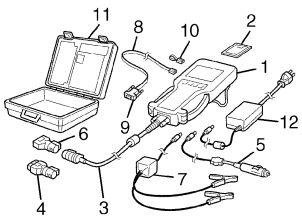

Section 7

HVAC

CONTENTS

Precautions 7-1
Precautions 7-1
Precautions on HVAC 7-1

Heater and Ventilation 7A-1
Schematic and Routing Diagram 7A-1
Heater and Ventilation Diagram 7A-1
Heater and Ventilation Wiring Circuit Diagram 7A-2
Component Location 7A-2
Electronic Control System Components Location 7A-2
Diagnostic Information and Procedures 7A-3
Heater and Ventilation Symptom Diagnosis 7A-3
Repair Instructions 7A-4
HVAC Unit Components 7A-4
HVAC Unit Removal and Installation (Non-A/C) 7A-4
Blower Motor Removal and Installation 7A-4
Blower Motor Inspection 7A-4
Blower Motor Resistor Removal and Installation 7A-5
Blower Motor Resistor Inspection 7A-5
Blower Motor Relay Inspection 7A-6
HVAC Control Unit Components 7A-6
HVAC Control Unit Removal and Installation 7A-7
Blower Speed Selector Inspection 7A-9
Air Intake Selector Inspection 7A-9
Air Intake Control Actuator Removal and Installation 7A-9
Air Intake Control Actuator Inspection 7A-10
Center Ventilation Louver Removal and Installation 7A-11
Side Ventilation Louver Removal and Installation 7A-11
Rear Duct Removal and Installation (If Equipped) 7A-12
HVAC Air Filter Removal and Installation (If Equipped) 7A-12
HVAC Air Filter Inspection (If Equipped) 7A-12

Air Conditioning System 7B-1
Manual Type 7B-1
Precautions 7B-1
A/C System Caution 7B-1
Precautions on Servicing A/C System 7B-1
General Description 7B-2
Sub-Cool A/C System Description 7B-2
A/C Operation Description at ECM 7B-3
Schematic and Routing Diagram 7B-4
A/C System Air Flow Diagram 7B-4
A/C System Wiring Diagram 7B-5
Manual A/C Electronic Input Output Diagram 7B-6
Component Location 7B-6
A/C System Major Components Location 7B-6
Electronic Control System Components Location 7B-7
Diagnostic Information and Procedures 7B-8
A/C System Performance Inspection 7B-8
Trouble Diagnosis for Abnormal Pressure 7B-11
A/C System Inspection at ECM 7B-12
A/C System Symptom Diagnosis 7B-13
Abnormal Noise Symptom Diagnosis of A/C System 7B-15
Repair Instructions 7B-17
Operation Procedure for Refrigerant Charge 7B-17
Condenser Cooling Fan Removal and Installation 7B-22
Condenser Cooling Fan Inspection 7B-23
Condenser Assembly On-Vehicle Inspection 7B-23
Condenser Assembly Removal and Installation 7B-23
Desiccant Removal and Installation 7B-24
HVAC Unit Components 7B-25
HVAC Unit Removal and Installation 7B-26
Evaporator Inspection 7B-27
Evaporator Temperature Sensor Removal and Installation 7B-27
Evaporator Temperature Sensor Inspection 7B-28
Expansion Valve Removal and Installation 7B-28
Expansion Valve Inspection 7B-28
A/C Refrigerant Pressure Sensor and Its Circuit Inspection 7B-29
A/C Refrigerant Pressure Sensor Removal and Installation 7B-29
A/C Switch Inspection 7B-29
A/C System Relay Inspection 7B-30
Compressor Drive Belt Inspection and Adjustment 7B-30

Compressor Drive Belt Removal and Installation 7B-31
Compressor Assembly Removal and Installation 7B-31
Compressor Assembly Components 7B-32
Magnet Clutch Inspection 7B-32
Magnet Clutch Removal and Installation 7B-33
Thermal Switch Inspection 7B-35
Thermal Switch Removal and Installation 7B-35
Relief Valve Inspection 7B-35
Relief valve Removal and Installation 7B-35
Specifications 7B-36
Tightening Torque Specifications 7B-36
Special Tools and Equipment 7B-37
Recommended Service Material 7B-37
Special Tool 7B-37
Automatic Type 7B-38
Precautions 7B-38
A/C System Caution 7B-38
Precautions in Diagnosing Trouble 7B-38
Precautions on Servicing A/C System 7B-38
General Description 7B-38
Auto A/C System Description 7B-38
HVAC Control Description 7B-39
Sub-Cool A/C System Description 7B-39
On-Board Diagnostic System Description 7B-40
Schematic and Routing Diagram 7B-40
A/C System Air Flow Diagram 7B-40
A/C System Wiring Diagram 7B-41
Auto A/C Electronic Control Input / Output Diagram 7B-42
Component Location 7B-42
A/C System Major Components Location 7B-42
Electronic Control System Components Location 7B-43
Diagnostic Information and Procedures 7B-44
Air Conditioning System Check 7B-44
A/C System Symptom Diagnosis 7B-46
Abnormal Noise Symptom Diagnosis of A/C System 7B-48
DTC Check 7B-48
DTC Clearance 7B-49
DTC Table 7B-50
Fail-Safe Table 7B-52
Scan Tool Data 7B-54
Visual Inspection 7B-55
DTC B1502: Inside Air Temperature Sensor Circuit Malfunction 7B-56
DTC B1503: Evaporator Temperature Sensor Circuit Malfunction 7B-57
DTC B1504: Sunload Sensor Circuit Malfunction 7B-58
DTC B1511: Temperature Control Actuator (Position Sensor) and/or Its Circuit Malfunction 7B-60
DTC B1512: Air flow Control Actuator (Position Sensor) and/or Its Circuit Malfunction 7B-61
DTC B1513: Temperature Control Actuator (Motor) and/or Its Circuit Malfunction 7B-63
DTC B1514: Air Flow Control Actuator (Motor) and/or Its Circuit Malfunction 7B-64
DTC B1520 / B1521 / B1522: Temperature / Blower Speed / Air Flow Selector Malfunction 7B-65
DTC B1541: Back-Up Power Supply Circuit Malfunction 7B-66
DTC B1546: A/C Refrigerant Pressure Malfunction 7B-67
DTC B1551: Serial Communication Circuit Malfunction 7B-68
DTC B1552: HVAC Control Module Check Sum Error 7B-69
DTC B1553: CAN Communication Circuit Malfunction 7B-69
DTC B1557: VSS Signal Failure 7B-70
DTC B1561: ECT Signal Failure 7B-70
DTC B1562: Outside Air Temperature Signal Failure 7B-71
DTC B1563: A/C Refrigerant Pressure Signal Failure 7B-71
DTC B1570: Engine Type Signal Failure 7B-72
DTC B1571: Combination Meter Spec Signal Failure 7B-72
Inspection of HVAC Control Module and Its Circuit 7B-73
A/C System Inspection at ECM 7B-76
Repair Instructions 7B-76
Operation Procedure for Refrigerant Charge 7B-76
HVAC Unit Components 7B-77
HVAC Unit Removal and Installation 7B-78
Temperature Control Actuator Removal and Installation 7B-78
Temperature Control Actuator and Its Circuit Inspection 7B-78
Air Flow Control Actuator Removal and Installation 7B-80
Air Flow Control Actuator and Its Circuit Inspection 7B-80
Air Intake Actuator Removal and Installation 7B-81
Air Intake Actuator Inspection 7B-81
Actuator Linkage Inspection 7B-81
Blower Motor Controller Removal and Installation 7B-81
Blower Motor Controller Inspection 7B-82
HVAC Control Module Removal and Installation 7B-82
Sunload Sensor Removal and Installation 7B-82
Sunload Sensor Inspection 7B-83
Outside Air Temperature Sensor Removal and Installation 7B-83
Outside Air Temperature Sensor Inspection 7B-83
Inside Air Temperature Sensor Removal and Installation 7B-83
Inside Air Temperature Sensor Inspection 7B-83
Condenser Cooling Fan Relay Inspection 7B-84
Condenser Cooling Fan Removal and Installation 7B-84

Condenser Cooling Fan Inspection 7B-84
Condenser Assembly On-Vehicle Inspection 7B-84
Condenser Assembly Removal and Installation 7B-84
Evaporator Inspection 7B-84
Evaporator Temperature Sensor Removal and Installation 7B-84
Evaporator Temperature Sensor Inspection 7B-84
Expansion Valve Removal and Installation 7B-84
Expansion Valve Inspection 7B-84
A/C Refrigerant Pressure Sensor and Its Circuit Inspection 7B-84
A/C Refrigerant Pressure Sensor Removal and Installation 7B-84
Compressor Relay Inspection 7B-84
Compressor Drive Belt Inspection and Adjustment 7B-84
Compressor Drive Belt Removal and Installation 7B-84
Compressor Assembly Removal and Installation 7B-84
Compressor Assembly Components 7B-84
Magnet Clutch Removal and Installation 7B-84
Magnet Clutch Inspection 7B-84
Thermal Switch Inspection 7B-84
Thermal Switch Removal and Installation 7B-84
Relief Valve Inspection 7B-84
Special Tools and Equipment 7B-85
Recommended Service Material 7B-85
Special Tool 7B-85

Precautions

Precautions

Precautions on HVAC

S7RW0A7000001

Air Bag Warning
Refer to “Air Bag Warning in Section 00”.

A/C System Caution
Refer to “A/C System Caution: Manual Type in Section 7B” or “A/C System Caution: Automatic Type in Section 7B”.

Precautions on Servicing A/C System
Refer to “Precautions on Servicing A/C System: Manual Type in Section 7B” or “Precautions on Servicing A/C System: Automatic Type in Section 7B”.

Precaution in Diagnosing Trouble (Automatic Type)
Refer to “Precautions in Diagnosing Trouble: Automatic Type in Section 7B”.

Heater and Ventilation

Schematic and Routing Diagram

Heater and Ventilation Diagram

S7RW0A7102002

NOTE

The figure shows left-hand steering vehicle. For right-hand steering vehicle, parts with (*) are installed at the opposite side.

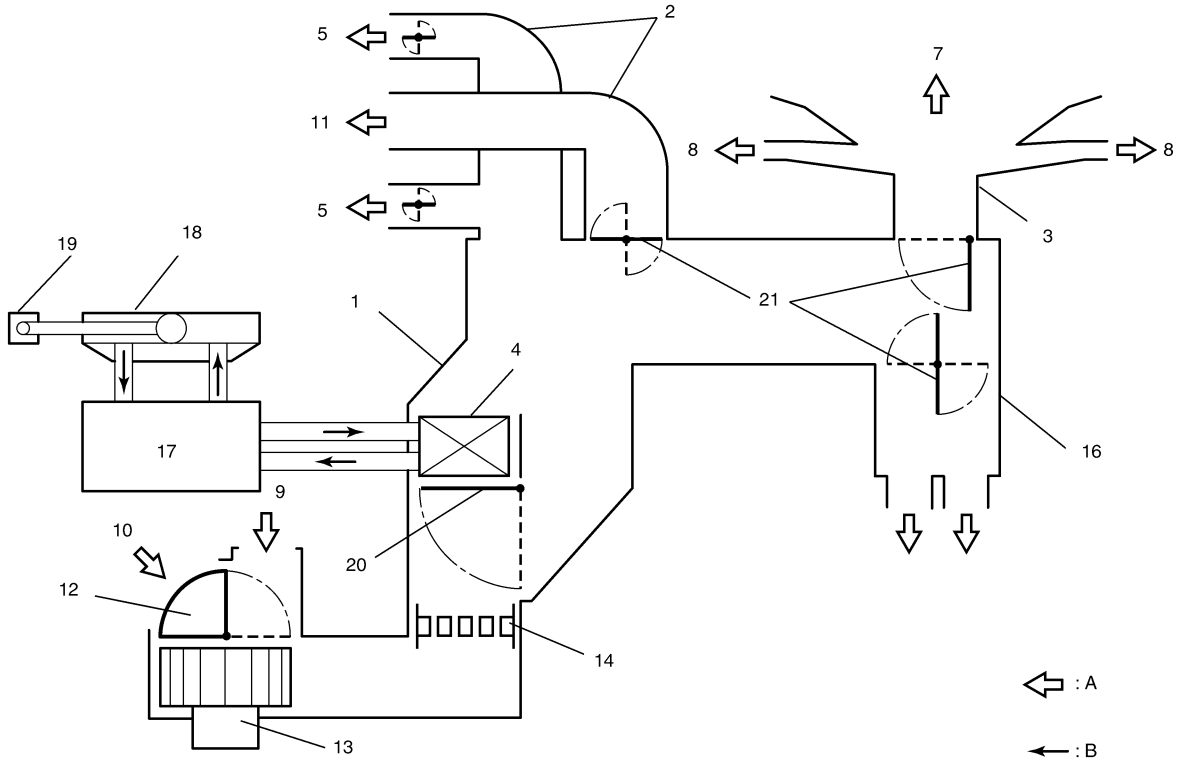

I6RW0C710001-02

A: Air flow	7. Defroster air	15. Rear duct (if equipped)
B: Water flow	8. Demister air	16. Foot duct
1. HVAC unit	9. Fresh air	17. Engine
2. Ventilator duct	10. Recirculation air	18. Radiator
3. Defroster duct and demister duct	11. Center ventilation air	19. Reservoir
4. Heater core	12. Air intake door	20. Temperature control door
5. Side ventilation air	13. Blower motor	21. Air flow control door
6. Foot air	14. Resistance board (non-A/C) or evaporator (A/C)	

Heater and Ventilation Wiring Circuit Diagram

S7RW0A7102001

Non–A/C

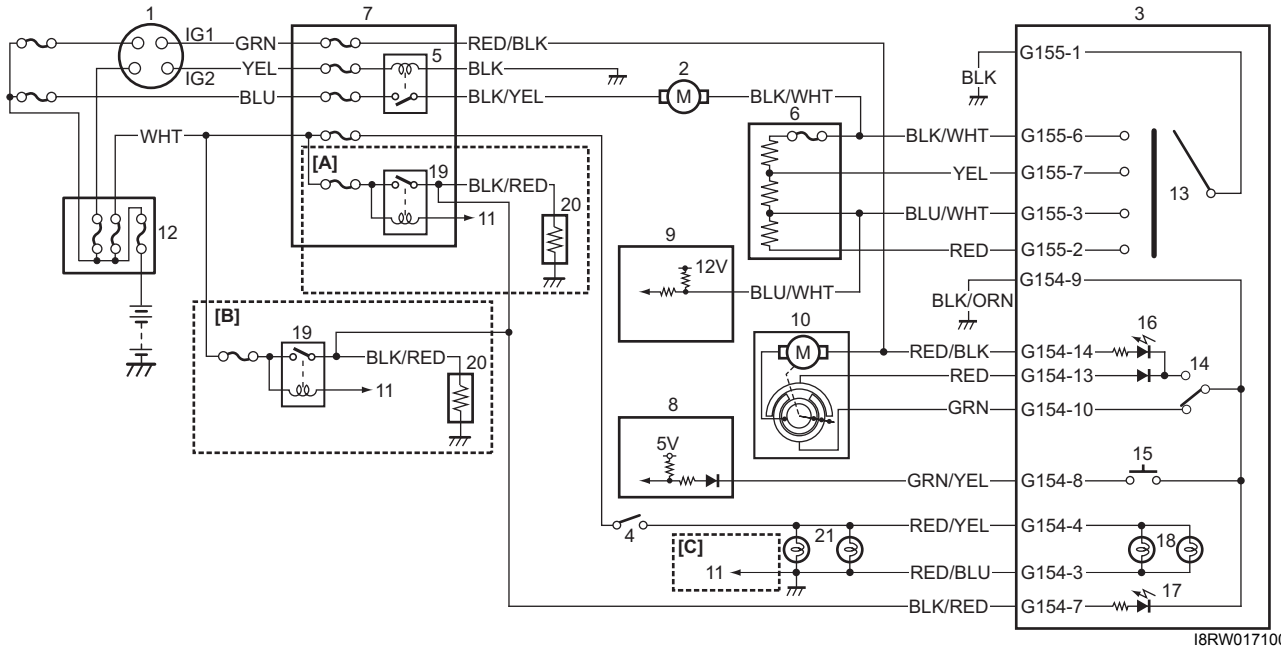

I8RW01710001-01

[A]: Hatchback model	4. Lighting switch	10. Air intake control actuator	16. “REC” indicator light
[B]: Sedan model	5. Blower motor relay	11. To BCM	17. Rear defogger indicator
[C]: Illumination control model	6. Blower motor resistor	12. Main fuse box	18. Illumination light
1. Ignition switch	7. Junction block assembly	13. Blower speed selector	19. Rear defogger relay
2. Blower motor	8. BCM	14. Air intake selector	20. Rear defogger
3. HVAC control unit	9. ECM	15. Rear defogger switch	21. Tail light

Manual A/C

Refer to “A/C System Wiring Diagram: Manual Type in Section 7B”.

Auto A/C

Refer to “A/C System Wiring Diagram: Automatic Type in Section 7B”.

Component Location

Electronic Control System Components Location

S7RW0A7103001

Refer to “Electronic Control System Components Location: Manual Type in Section 7B” (non-A/C and manual A/C) or “Electronic Control System Components Location: Automatic Type in Section 7B” (auto A/C).

Diagnostic Information and Procedures

Heater and Ventilation Symptom Diagnosis

S7RW0A7104001

Condition	Possible cause	Correction / Reference Item
Blower motor does not operate with blower speed selector ON	Fuse blown	*Check related fuses, and then check for short circuit to ground.*
	Blower motor relay faulty	*Check blower motor relay referring to "Blower Motor Relay Inspection".*
	Blower motor resistor faulty	*Check blower motor resistor referring to "Blower Motor Resistor Inspection".*
	Blower speed selector faulty	*Check blower speed selector referring to "Blower Speed Selector Inspection".*
	Blower motor faulty	*Check blower motor referring to "Blower Motor Inspection".*
	Wiring or grounding faulty	*Repair as necessary.*
Incorrect temperature output	Temperature control cable broken or bent (non-A/C and manual A/C)	*Check temperature control cable.*
	Temperature selector faulty (non-A/C and manual A/C)	*Check temperature selector.*
	Incorrect installation of temperature control cable (non-A/C and manual A/C)	*Check position and adjust it as necessary.*
	Temperature control door assembly broken	*Repair temperature control door assembly.*
	Air ducts clogged	*Repair air ducts.*
	Heater core leaked or clogged	*Replace heater core.*
	Heater hoses leaked or clogged	*Replace heater hoses.*
	Thermostat faulty	*Check thermostat referring to "Thermostat Inspection in Section 1F".*
	Temperature control actuator faulty (auto A/C)	*Check temperature control actuator referring to "Temperature Control Actuator and Its Circuit Inspection: Automatic Type in Section 7B".*
	HVAC control module faulty (auto A/C)	*Check HVAC control module referring to "Inspection of HVAC Control Module and Its Circuit: Automatic Type in Section 7B".*
	Wiring or grounding faulty (auto A/C)	*Repair as necessary.*
Air outlet port does not change or does not agree with air flow selector's position even if air flow selector is changed	Air flow control cable broken or bent (non-A/C and manual A/C)	*Check air flow control cable.*
	Air flow selector faulty (non-A/C and manual A/C)	*Check air flow selector.*
	Incorrect installation of air flow control cable (non-A/C and manual A/C)	*Check position and adjust it as necessary.*
	Air flow control door assembly broken	*Repair air flow control door assembly.*
	Air ducts leaked or clogged	*Repair air ducts.*
	Air flow control actuator faulty (auto A/C)	*Check air flow control actuator referring to "Air Flow Control Actuator and Its Circuit Inspection: Automatic Type in Section 7B".*
	HVAC control module faulty (auto A/C)	*Check HVAC control module referring to "Inspection of HVAC Control Module and Its Circuit: Automatic Type in Section 7B".*
	Wiring or grounding faulty (auto A/C)	*Repair as necessary.*
Air intake door does not change even if air intake mode is changed	Air intake door broken	*Repair air intake door.*
	Air intake control actuator faulty	*Check air intake control actuator referring to "Air Intake Control Actuator Inspection".*
	Air intake selector faulty	*Check air intake selector referring to "Air Intake Selector Inspection".*
	Wiring or grounding faulty	*Repair as necessary.*

Repair Instructions

HVAC Unit Components

S7RW0A7106001

For non-A/C and manual A/C, refer to “HVAC Unit Components: Manual Type in Section 7B”.
For auto A/C, refer to “HVAC Unit Components: Automatic Type in Section 7B”.

HVAC Unit Removal and Installation (Non-A/C)

S7RW0A7106002

For manual A/C and auto A/C, refer to “HVAC Unit Removal and Installation: Manual Type in Section 7B”.

Removal

1) Drain engine coolant referring to “Cooling System Draining in Section 1F”, and then disconnect heater hoses from HVAC unit.
2) Remove cowl top cover from vehicle body referring to “Cowl Top and Front Lower Crossmember Components in Section 9K”.
3) Remove instrument panel from vehicle body referring to “Instrument Panel Removal and Installation in Section 9C”.
4) Remove HVAC unit (1) from vehicle body by removing nuts (2).

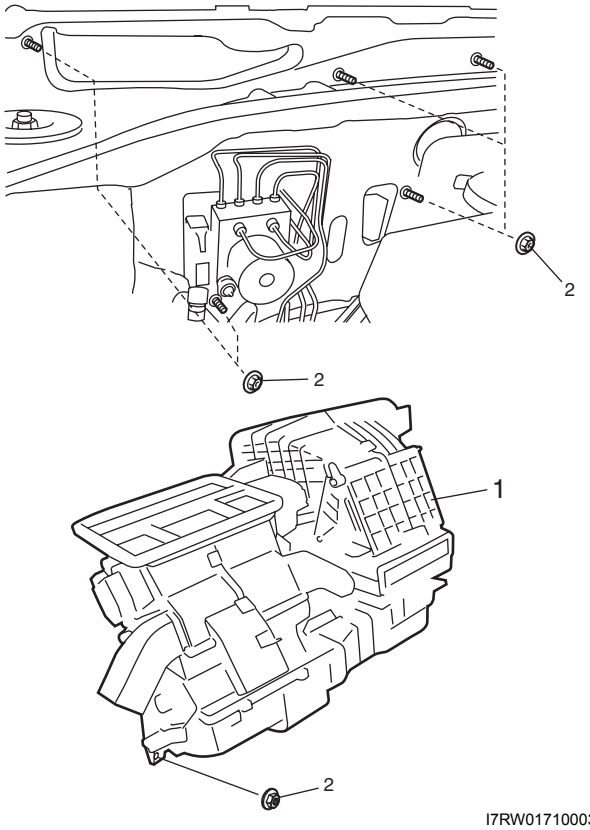

I7RW01710003-01

Installation

Reverse removal procedure noting the following instructions.

- Be careful not to catch any cable and wiring harness in inappropriate position.
- Adjust control cables of HVAC control unit referring to “HVAC Control Unit Removal and Installation”.
- Refill cooling system with coolant referring to “Cooling System Flush and Refill in Section 1F”.

Blower Motor Removal and Installation

S7RW0A7106003

Removal

1) Disconnect negative (–) cable from battery.
2) Disconnect connector (1) from blower motor (2).
3) Remove blower motor (2) from HVAC unit as follows.
   a) Remove screws (4).
   b) Release tub (3) to arrow direction.
   c) Hold Step b) and turn blower motor (2) to arrow direction.

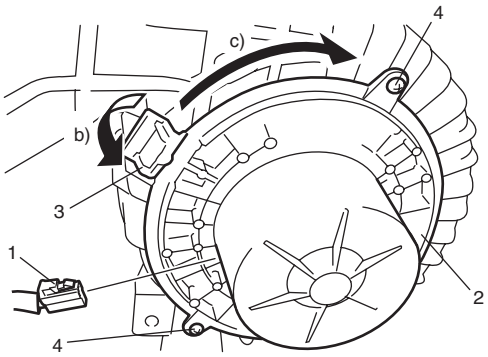

I7RW01710004-02

Installation

Reverse removal procedure.

Blower Motor Inspection

S7RW0A7106004

- Check blower motor for resistance between two terminals as shown.
  If there is no continuity, replace blower motor.

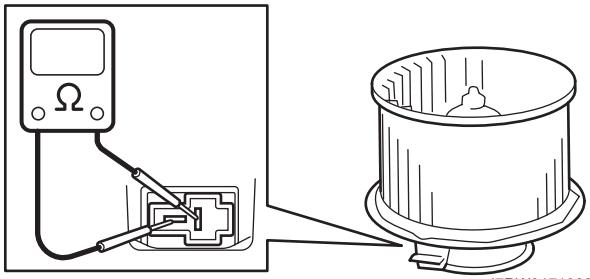

I7RW01710005-01

- Check for operation and current.
  a. Put blower motor (1) in a soft-jawed vise.
  b. Connect battery to blower motor as shown.
  c. Check if blower motor operates smoothly without noise.
  d. Check if ammeter indicates the specified current. If measured current is out of specification, replace blower motor.

  Blower motor specified current at 12 V
  18.5 A maximum at 20 – 25 °C (68 – 77 °F)

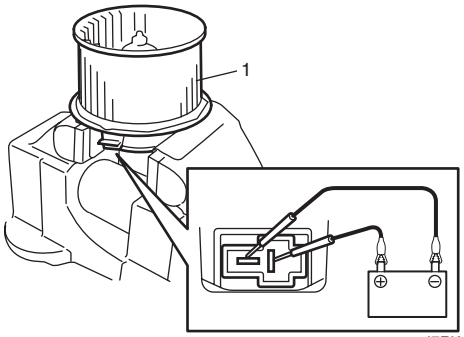

I7RW01710006-01

Blower Motor Resistor Removal and Installation

S7RW0A7106005

Removal

1) Disconnect negative (–) cable from battery.
2) Remove glove box from instrument panel.
3) Remove passenger side foot duct (1) from HVAC unit by removing screw (2).

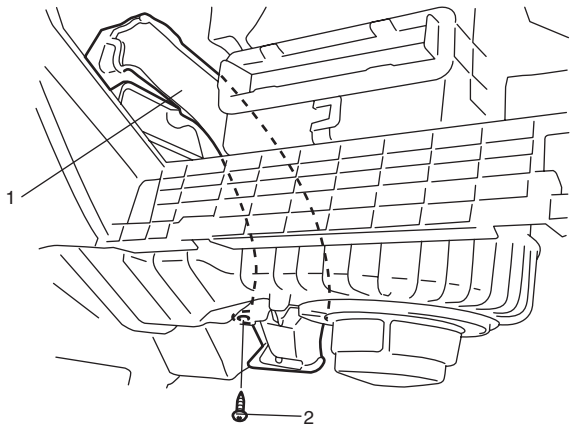

I7RW01710007-01

4) Disconnect connector (1) from blower motor resistor (2), and then remove blower motor resistor from HVAC unit by removing screws (3).

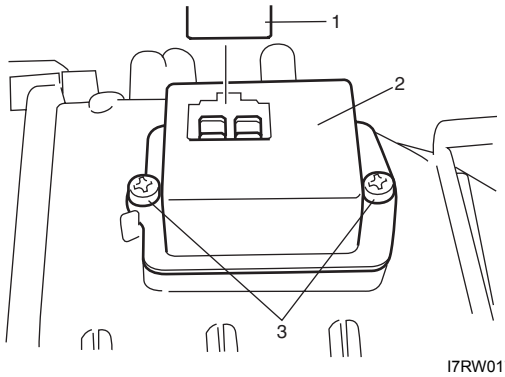

I7RW01710008-01

Installation

Reverse removal procedure.

Blower Motor Resistor Inspection

S7RW0A7106006

Measure each terminal-to-terminal resistance. If measured resistance is out of specification, replace blower motor resistor.

Blower motor resistor resistance
"H" – "MH": Approx. 0.43 Ω at 20 – 25 °C (68 – 77 °F)
"MH" – "ML": Approx. 0.6 Ω at 20 – 25 °C (68 – 77 °F)
"ML" – "L": Approx. 2.0 Ω at 20 – 25 °C (68 – 77 °F)

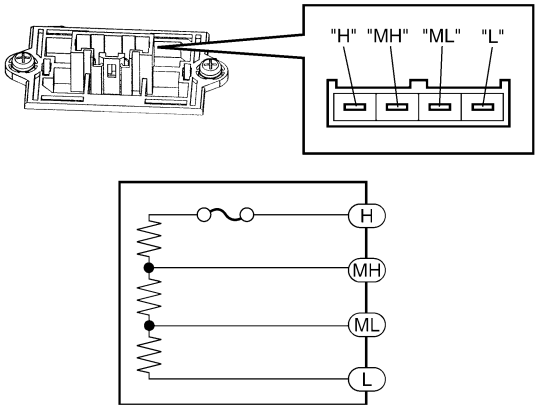

I7RW01710009-02

Blower Motor Relay Inspection

S7RW0A7106007

1) Disconnect negative (–) cable at battery.
2) Disable air bag system referring to “Disabling Air Bag System in Section 8B”.
3) Remove junction block assembly (2).
4) Disconnect blower motor relay (1) from junction block assembly (2).
5) Check that there is no continuity between terminal “C” and “D”. If there is continuity, replace relay.
6) Connect battery positive (+) terminal to terminal “B” of relay. Connect battery negative (–) terminal “A” of relay.
   Check continuity between terminal “C” and “D”.
   If there is no continuity when relay is connected to the battery, replace relay.

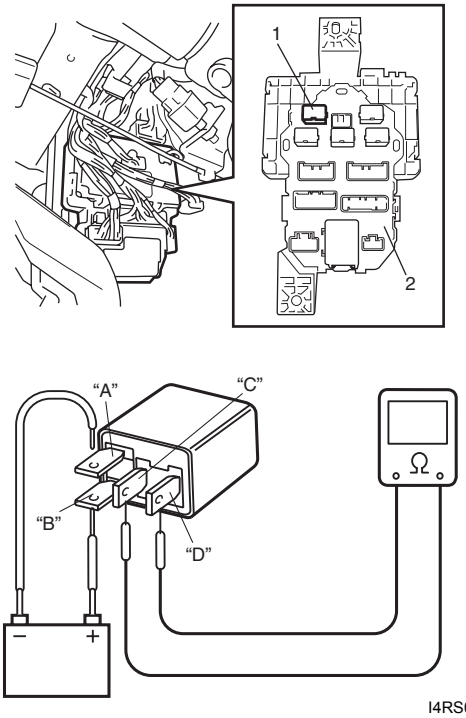

I4RS0B710008-01

HVAC Control Unit Components

S7RW0A7106008

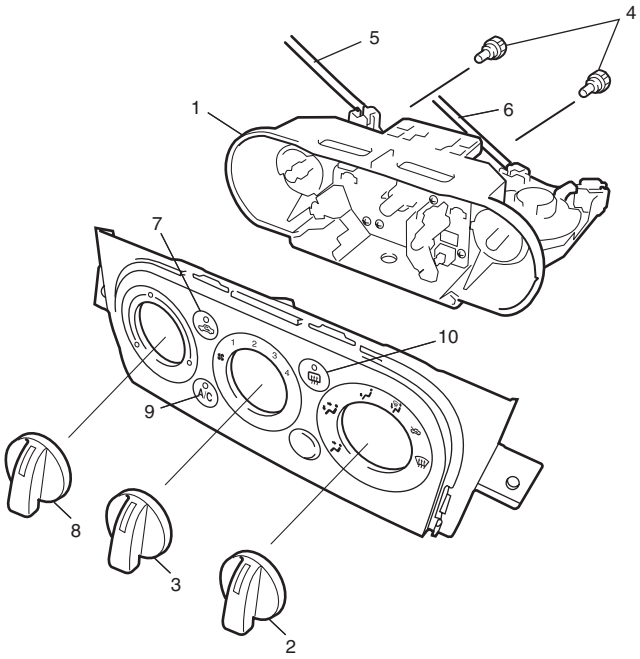

I5RW0A710005-01

1. Heater control body assembly	4. Bulb	7. Air intake selector	10. Rear defogger switch
2. Air flow selector	5. Temperature control cable	8. Temperature selector	
3. Blower speed selector	6. Air flow control cable	9. A/C switch (if equipped)	

HVAC Control Unit Removal and Installation

S7RW0A7106009

Removal

1) Disconnect negative (–) cable at battery.
2) Remove steering column hole cover from instrument panel.
3) Remove audio unit from instrument panel referring to “Audio Unit Removal and Installation (If Equipped) in Section 9C”.
4) Remove driver side foot duct (1) from HVAC unit by removing screw (2).

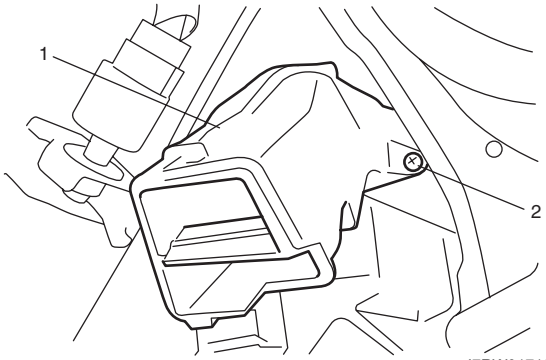

I7RW01710010-01

5) Disconnect temperature control cable (1) and air flow control cable (2) from HVAC unit (3).

LH steering vehicle

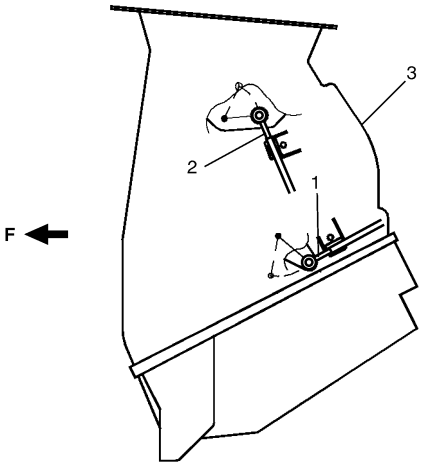

I7RW01710012-02

RH steering vehicle

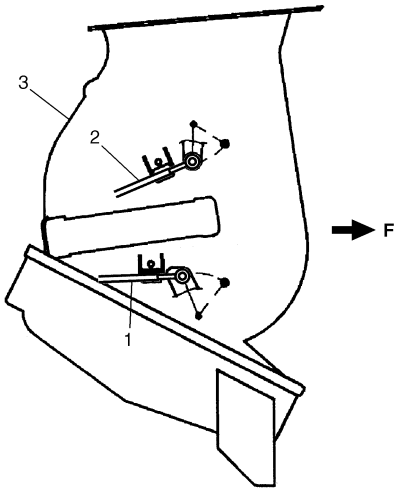

I6RW0C710005-01

F: Vehicle forward

6) Remove center garnish from instrument panel.
7) Remove HVAC control unit from instrument panel.
8) Disconnect connectors from HVAC control unit.

Installation

Reverse removal procedure noting the following instructions.

- Connect temperature control cable and air flow control cable of HVAC control unit to links of HVAC unit.
  a. For LH steering vehicle, set airflow selector (1) to “DEF” position and temperature selector (2) to “MAX HOT” position.

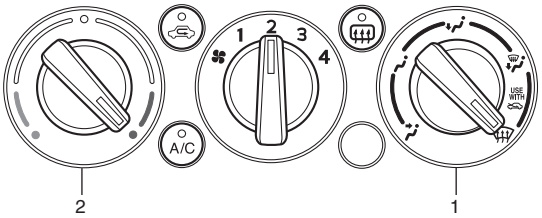

I4RS0B710013-01

For RH steering vehicle, set airflow selector (1) to “VENT” position and temperature selector (2) to “MAX COOL” position.

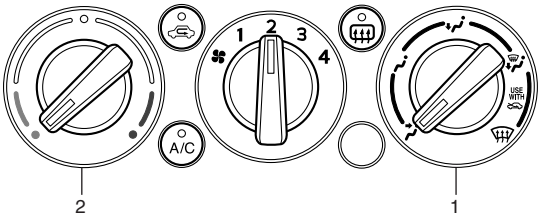

I4RS0A710016-01

b. Move temperature control lever (1) to “MAX HOT” position “a” (LH steering vehicle) or “MAX COOL” position “b” (RH steering vehicle), then fix temperature control inner cable (2) to pin of temperature control lever and fix outer cable (3) to cable lock clamp (4).

LH steering vehicle

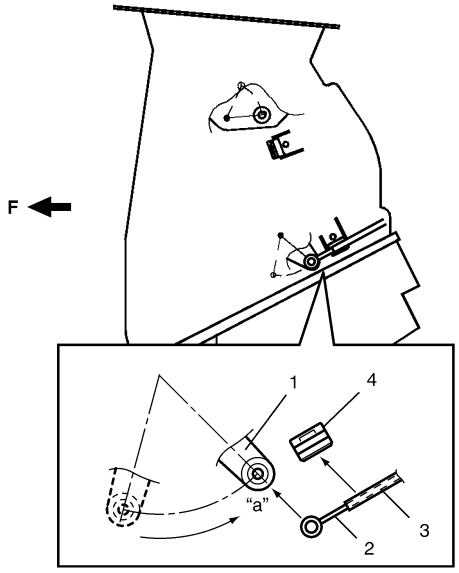

I7RW01710013-02

RH steering vehicle

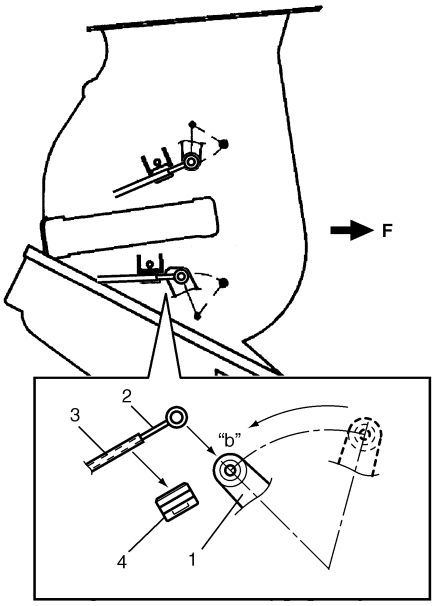

I6RW0C710007-01

F: Vehicle forward

c. Move air flow control plate (1) to “DEF” position “c” (LH steering vehicle) or “VENT” position “d” (RH steering vehicle), then fix air flow control inner cable (2) to pin of air flow control plate and fix outer cable (3) to cable lock clamp (4).

LH steering vehicle

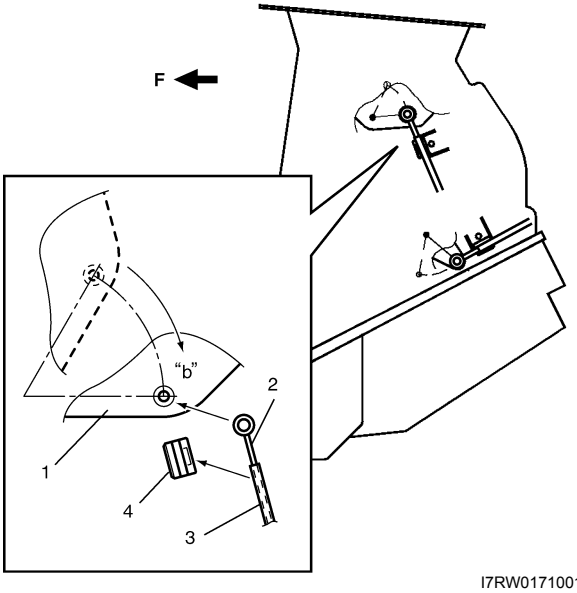

I7RW01710014-02

RH steering vehicle

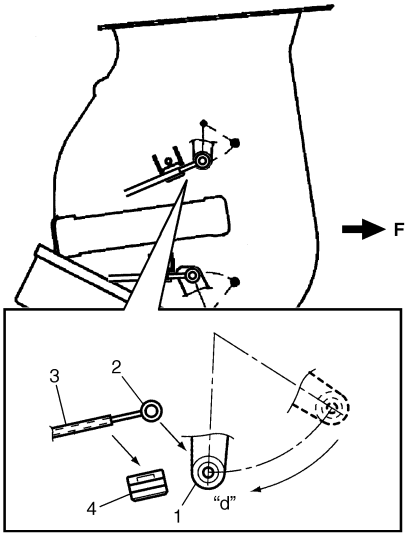

I6RW0C710008-01

F: Vehicle forward

NOTE

After installing control cables, make sure that control lever and plate move smoothly and stop at proper position.

- Make sure that air flow outlet changes correctly as air flow selector is changed.

Blower Speed Selector Inspection

S7RW0A7106010

Check blower speed selector for each terminal to terminal continuity. If check result does not meet the following conditions, replace HVAC control unit.

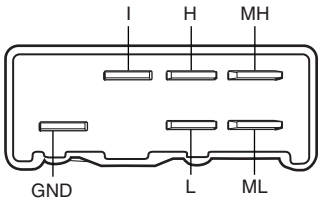

Position \ Terminal	GND	I	L	ML	MH	H
OFF	○					
1	○	○	○			
2	○	○		○		
3	○	○			○	
4	○	○				○

I4RS0A710019-01

Air Intake Selector Inspection

S7RW0A7106011

- Check that there is continuity between terminal (1) and terminal (2) when air intake selector is at “FRE” position.
- Check that there is no continuity between terminal (1) and terminal (2) when air intake selector is at “REC” position.

If check result does not meet the above conditions, replace HVAC control unit.

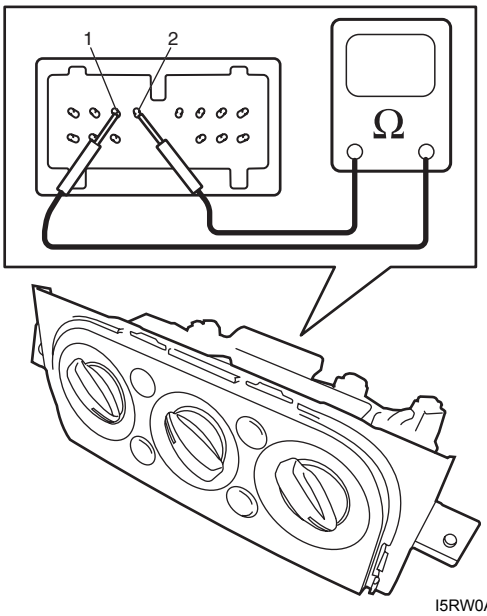

I5RW0A710007-01

Air Intake Control Actuator Removal and Installation

S7RW0A7106012

Removal

1) Disconnect negative cable from battery.
2) Remove glove box from instrument panel.
3) Remove passenger side foot duct (1) from HVAC unit by removing screw (2). (LH steering vehicle only.)

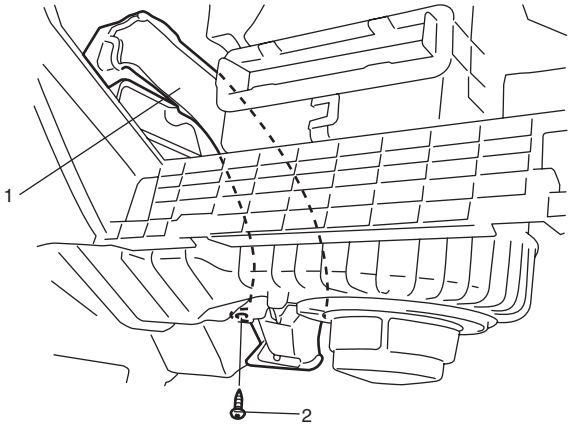

I7RW01710007-01

4) Disconnect connector (1) from air intake control actuator (2).
5) Detach linkage rod (3) and remove air intake control actuator (2) by removing screws (4).

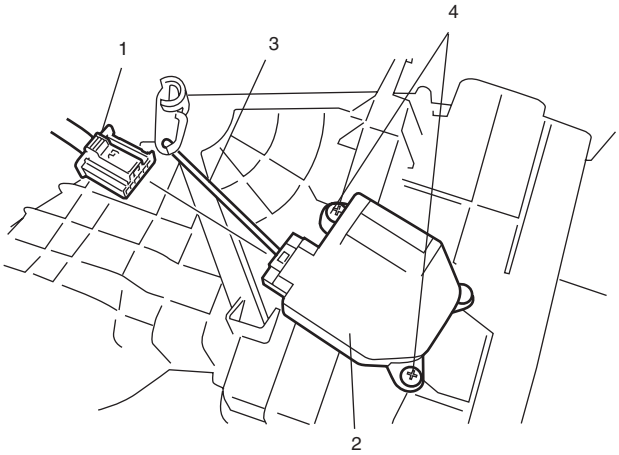

I7RW01710016-02

Installation

Reverse removal procedure noting the following instruction.

- Be sure to insert the linkage rod (1) into the hole (2) of air intake control actuator.

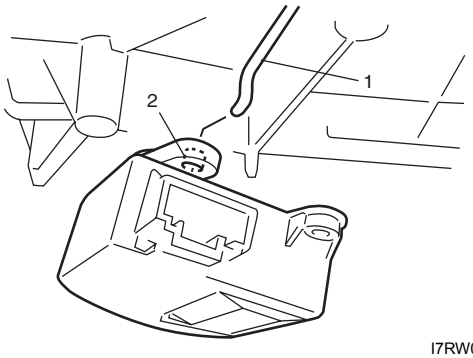

I7RW01710017-02

Air Intake Control Actuator Inspection

S7RW0A7106013

Check air intake control actuator as follows:

1) Using service wire, connect battery positive terminal to “d” terminal and battery negative terminal to terminal “a”. And, check if air intake selector link operates smoothly and it stops at “FRE” position (1).
2) Using service wire, connect battery positive terminal to “d” terminal and battery negative terminal to terminal “c”. And, check if air intake selector link operates smoothly and it stops at “REC” position (2).
3) For auto A/C model, using service wire, connect battery positive terminal to “d” terminal and battery negative terminal to “b” terminal. And, check air intake selector link operates smoothly and it stops at MIX position (3).

If malfunction is found, replace air intake control actuator.

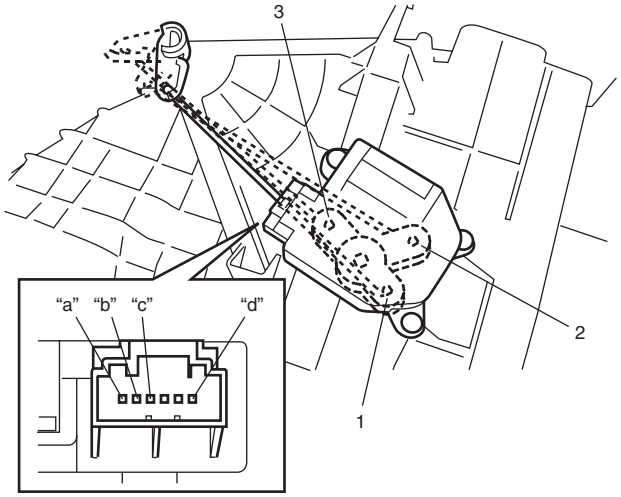

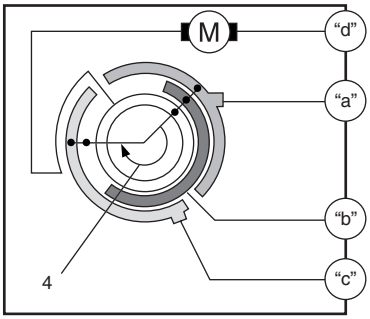

I7RW01710018-05

4. Motor rotation direction

Center Ventilation Louver Removal and Installation

S7RW0A7106014

Removal

1) Disconnect negative (–) cable from battery.
2) Remove audio unit from instrument panel referring to “Audio Unit Removal and Installation (If Equipped) in Section 9C”.
3) Remove center ventilation louver (1) with garnish (2) from instrument panel, and then disconnect connector from hazard switch.

NOTE

Garnish is fitted to instrument panel with six clips. When removing garnish from instrument panel, be careful not to break them.

4) Separate center ventilation louver and garnish.

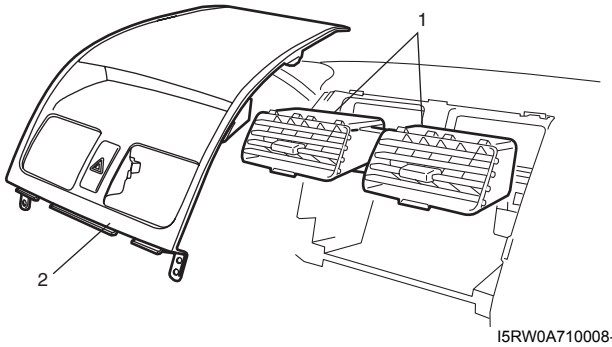

I5RW0A710008-01

Installation

Reverse removal procedure.

Side Ventilation Louver Removal and Installation

S7RW0A7106015

Removal

1) Remove instrument panel from vehicle body referring to “Instrument Panel Removal and Installation in Section 9C”
2) Remove steering support member (1), defroster nozzle (2) and ventilator duct (3) from instrument panel.

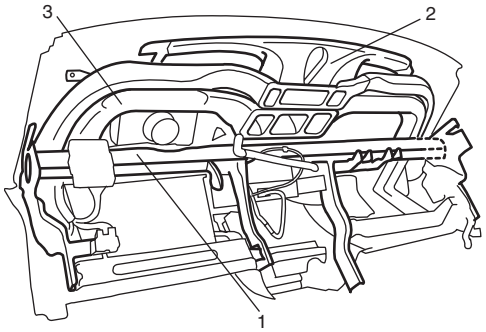

I5RW0A710009-01

3) Remove side ventilation louver (1) from instrument panel while pressing clips (2).

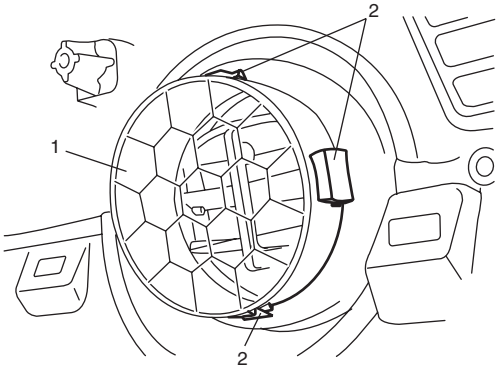

I5RW0A710010-01

Installation

Reverse removal procedure noting the following instruction.

- Side ventilation louver is fitted to instrument panel with four clips (1). When installing side ventilation louver to instrument panel, position the smallest clip to the top.

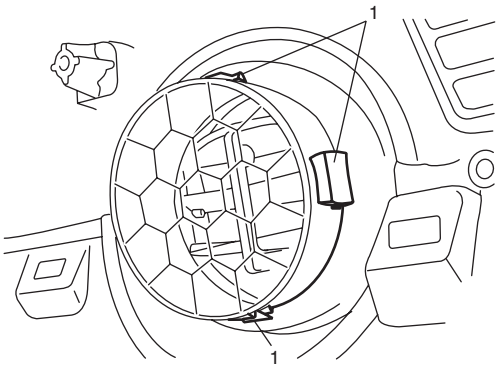

I5RW0A710011-01

Rear Duct Removal and Installation (If Equipped)

S7RW0A7106016

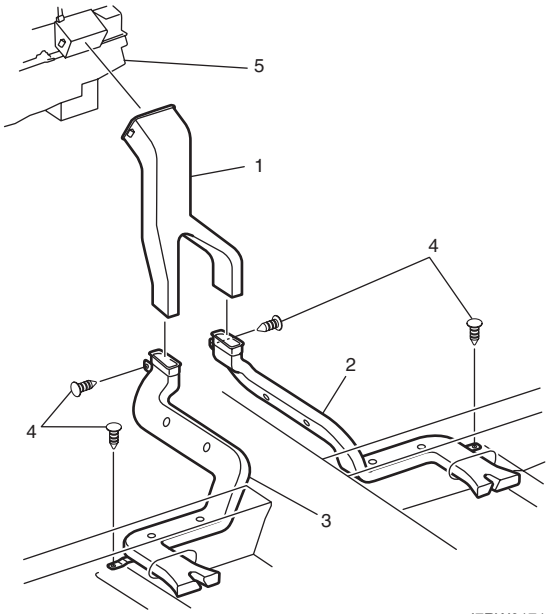

I7RW01710019-01

1. Center rear duct	4. Clip
2. Right rear duct	5. HVAC unit
3. Left rear duct	

Removal

1) Disconnect negative (–) cable at battery.
2) Remove front seats referring to “Front Seat Removal and Installation in Section 9G”.
3) Remove console box referring to “Console Box Components in Section 9H”.
4) Take off carpet till rear ducts is totally exposed.
5) Remove right and left rear ducts.
6) Remove center rear duct as follows, if necessary.
   a) Remove HVAC control unit referring to “HVAC Control Unit Removal and Installation” (non-A/C or manual A/C) or “HVAC Control Module Removal and Installation: Automatic Type in Section 7B” (auto A/C).
   b) Remove center rear duct from HVAC unit.

Installation

Reverse removal procedure noting the following instructions.

- Install HVAC control unit referring to “HVAC Control Unit Removal and Installation” (non-A/C or manual A/C) or “HVAC Control Module Removal and Installation: Automatic Type in Section 7B” (auto A/C), if removed.
- Install console box referring to “Console Box Components in Section 9H”.
- Install front seats referring to “Front Seat Removal and Installation in Section 9G”.

HVAC Air Filter Removal and Installation (If Equipped)

S7RW0A7106017

Removal

1) Remove glove box from instrument panel.
2) Remove air filter (1) from HVAC unit while releasing claws (2).

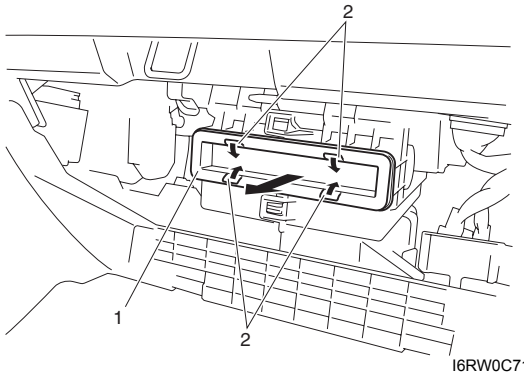

I6RW0C710010-01

Installation

Reverse removal procedure noting the following instructions.

- Position air filter by directing its arrow mark to the upward.

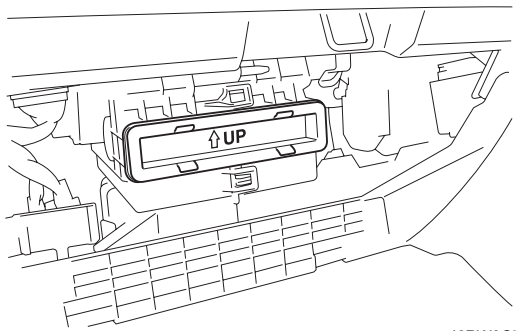

I6RW0C710009-01

HVAC Air Filter Inspection (If Equipped)

S7RW0A7106018

Reference: “HVAC Air Filter Removal and Installation (If Equipped)”

Check that filter is not excessively dirty, damage or oily, clean filter with compressed air from air outlet side of filter. If abnormality is found, replace filter with new one.

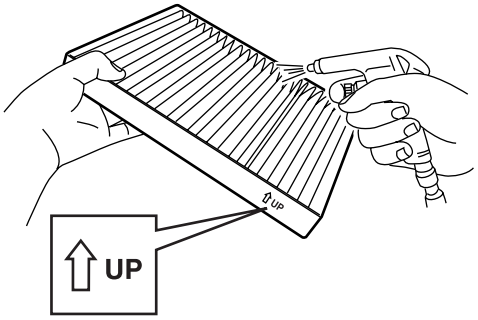

I4RS0A710032-01

Air Conditioning System

Manual Type

Precautions

A/C System Caution

S7RW0A7210001

⚠ **CAUTION**

The A/C system of this vehicle uses HFC-134a (R-134a) refrigerant, specified compressor oil and specified parts.
Do not use CFC-12 (R-12) refrigerant, R-12 exclusive use compressor oil and R-12 exclusive parts in this A/C system, do not attempt to use R-12 servicing equipment. Otherwise, use of it will result in leakage of refrigerant, damage or other faulty condition of A/C system and damage or other faulty condition of servicing equipment.
When replenishing or changing refrigerant and compressor oil and when replacing parts, make sure that the material or the part to be used is appropriate to the A/C installed in the vehicle being serviced. Use of incorrect one will result in leakage of refrigerant, damage in parts or other faulty condition.

Precautions on Servicing A/C System

S7RW0A7210002

⚠ WARNING

Should refrigerant HFC-134a (R-134a) is exposed to your eye(s), consult a doctor immediately.

- **Do not reuse your hand to rub affected eye(s). Instead, use fresh cold water to splash it over affected area to thus gradually raise its temperature above the freezing point.**
- **Obtain proper treatment as soon as possible from a doctor or eye specialist. Should liquid refrigerant HFC-134a (R-134a) is exposed to your skin, such affected part should be treated in the same manner as when skin is frostbitten or frozen.**

Handling Refrigerant HFC-134a (R-134a)

- Always wear goggles to protect your eyes.
- Avoid direct contact to liquid refrigerant.
- Do not heat refrigerant container higher than 40 °C (104 °F).
- Do not discharge refrigerant into atmosphere.
- Do not expose bright metals to liquid refrigerant. Refrigerant combined with moisture is corrosive and tarnishes surfaces of bright metals including chrome.
- Never use heat for bending pipes. When bending a pipe, try to make its bending angle as smooth as possible.
- Keep internal parts of air conditioning free from moisture and dirt. When disconnecting any line from system, install a blind plug or cap to the fitting immediately.
- When handling recovery and recycling equipment, be sure to follow the instruction manual for the equipment.
- Check local governmental regulations regarding working with refrigerator systems and its tooling.
- When connecting hoses and pipes, apply a few drops of compressor oil (refrigerant oil) to O-ring.
- Replace O-ring with new one once hoses, pipes and parts disconnected.
- When tightening or loosening a fitting, use two wrenches, one for turning and the other for support.
- Route drain hose so that drained water does not make any contact to vehicle components.
- If pipes or hoses are replaced, replenish specified amount of compressor oil to compressor suction side referring to “Replenishing Compressor Oil” in “Operation Procedure for Refrigerant Charge: Manual Type”.

Refrigerant Recovery
When discharging refrigerant out of A/C system, always recover it by using refrigerant recovery and recycling equipment because discharging refrigerant HFC-134a (R-134a) into atmosphere would cause adverse effect to environments referring to “Recovery” in “Operation Procedure for Refrigerant Charge: Manual Type”.

Refrigerant Charge
After performing compressor oil replenishment and evacuation, charge a proper amount of refrigerant to A/C system referring to “Charge” in “Operation Procedure for Refrigerant Charge: Manual Type”.

General Description

Sub-Cool A/C System Description

S7RW0A7211001

In the sub-cool A/C system (condenser integrated with receiver / dryer), the inside of the condenser is divided into the condensation part and the sub-cooler part, and the receiver / dryer is located between those. In the receiver / dryer, the refrigerant is separated into the vapor refrigerant and the liquid refrigerant. Only the liquid refrigerant is delivered to the sub-cooler part of the condenser. The refrigerant is supercooled by the sub-cooler part of the condenser.

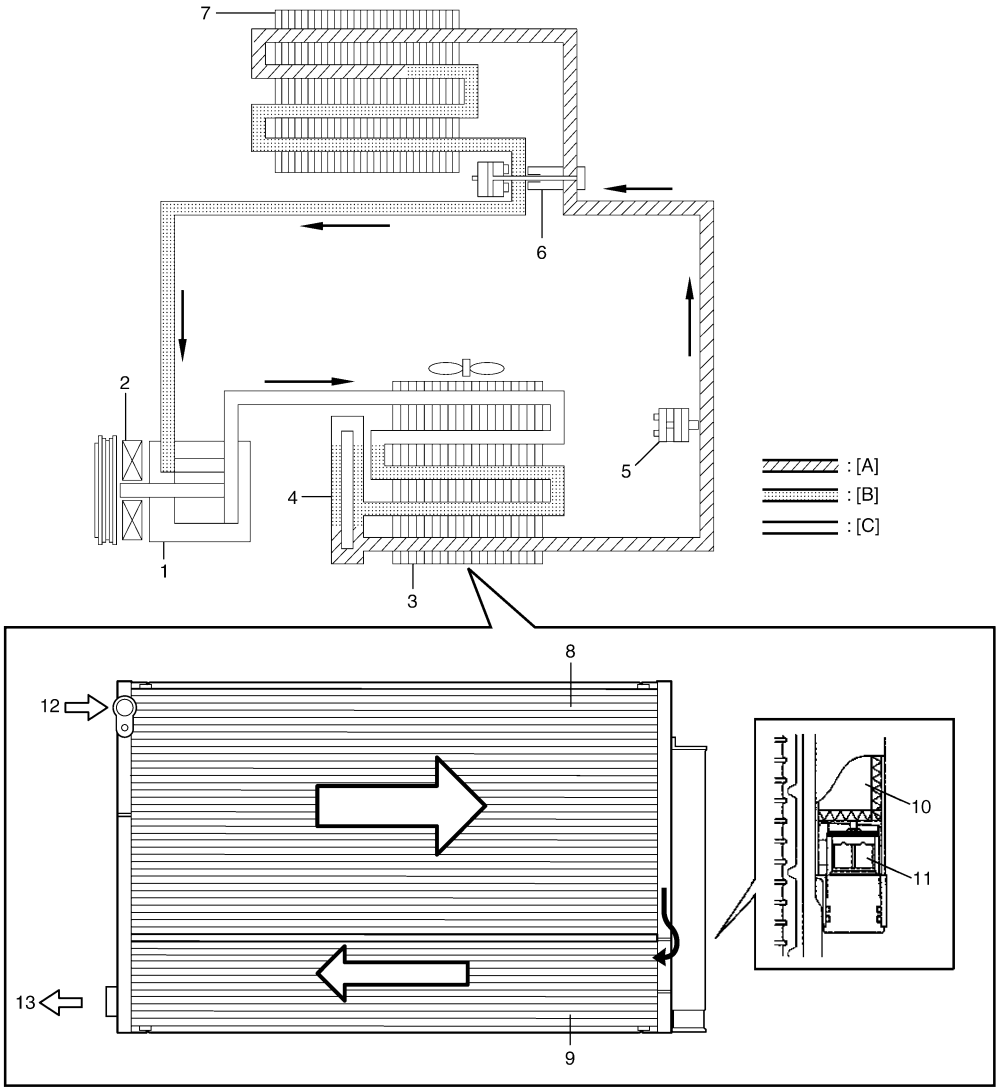

I5RW0A721003-02

[A]: Liquid	2. Magnet clutch	6. Expansion valve	10. Desiccant
[B]: Vapor	3. Condenser	7. A/C evaporator	11. Filter
[C]: Superheated vapor	4. Receiver/dryer	8. Condensation part	12. Vapor refrigerant
1. Compressor	5. Refrigerant pressure sensor	9. Sub-cooler part	13. Liquid refrigerant

A/C Operation Description at ECM

S7RW0A7211003

ECM controls the A/C compressor relay and condenser cooling fan relay according to signals from HVAC control unit, A/C refrigerant pressure sensor, ECT sensor and evaporator temperature sensor. The A/C switch ON signal from HVAC control unit is transmitted to ECM through BCM. For CAN communication system, refer to “CAN Communication System Description in Section 1A”.
ECM turns ON the A/C compressor relay when the vehicle state satisfy conditions described below.

- A/C switch ON signal is inputted from HVAC control unit
- A/C refrigerant pressure is within specified range
- Evaporator temperature is within specified range
- Engine speed is within specified range
- Engine coolant temperature is lower than specified value
- Throttle opening is lower than specified value
- Vehicle is not in either state of starting or quick acceleration
- ECT sensor malfunction is not detected
- A/C refrigerant pressure sensor malfunction is not detected

Condenser Cooling Fan Relay Control

ECM turn ON the condenser cooling fan relay at the same time when ECM turn ON the A/C compressor relay.

Schematic and Routing Diagram

A/C System Air Flow Diagram

S7RW0A7212001

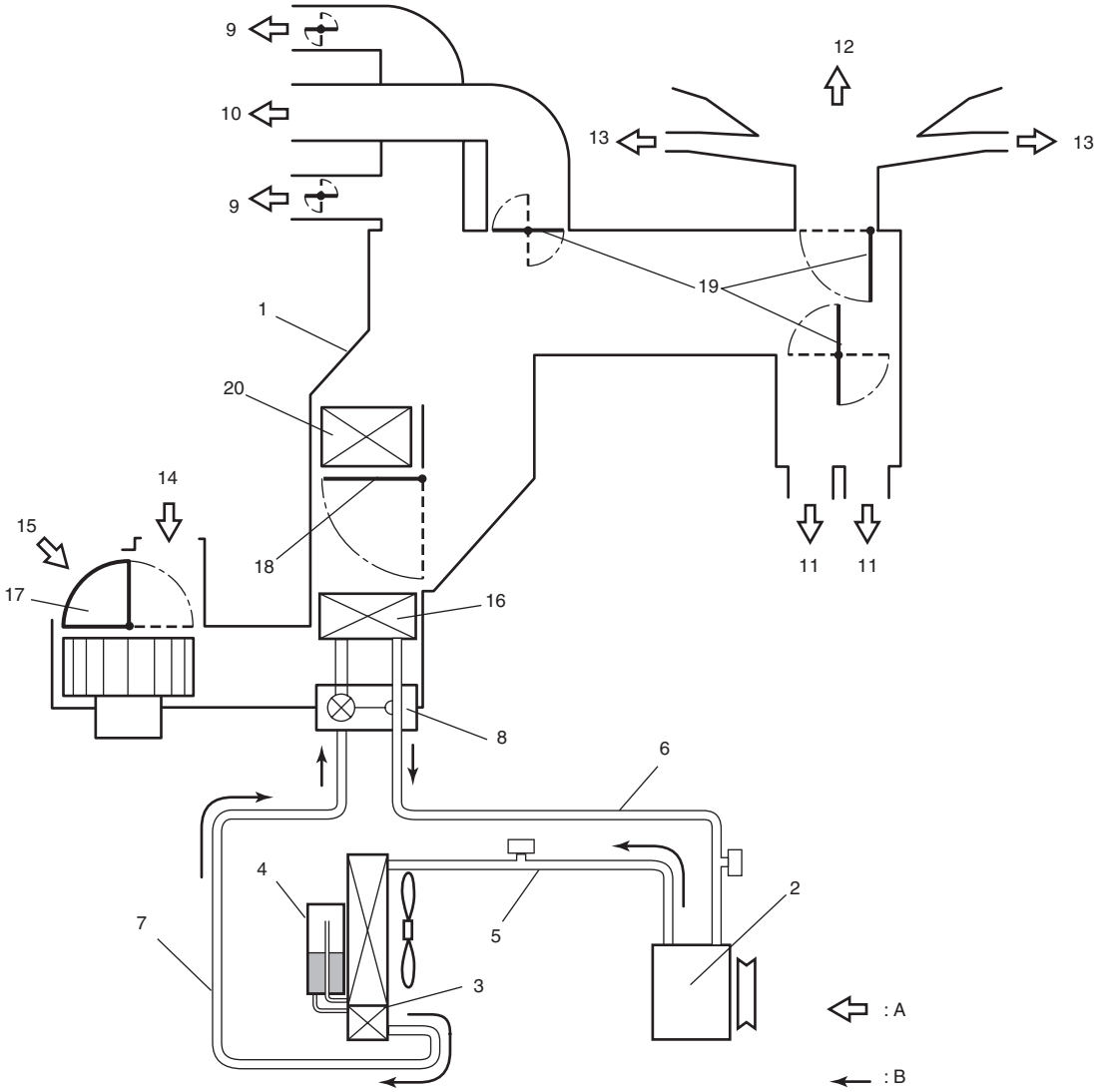

I7RW01721002-03

A: Air flow	5. Discharge hose	11. Foot air	17. Air intake door
B: Refrigerant flow	6. Suction hose	12. Front defroster air	18. Temperature control door
1. HVAC unit	7. Liquid pipe	13. Side defroster air	19. Air flow control door
2. Compressor	8. Expansion valve	14. Fresh air	20. Heater core
3. Condenser assembly	9. Side ventilation air	15. Recirculation air	
4. Receiver/dryer	10. Center ventilation air	16. Evaporator	

A/C System Wiring Diagram

S7RW0A7212002

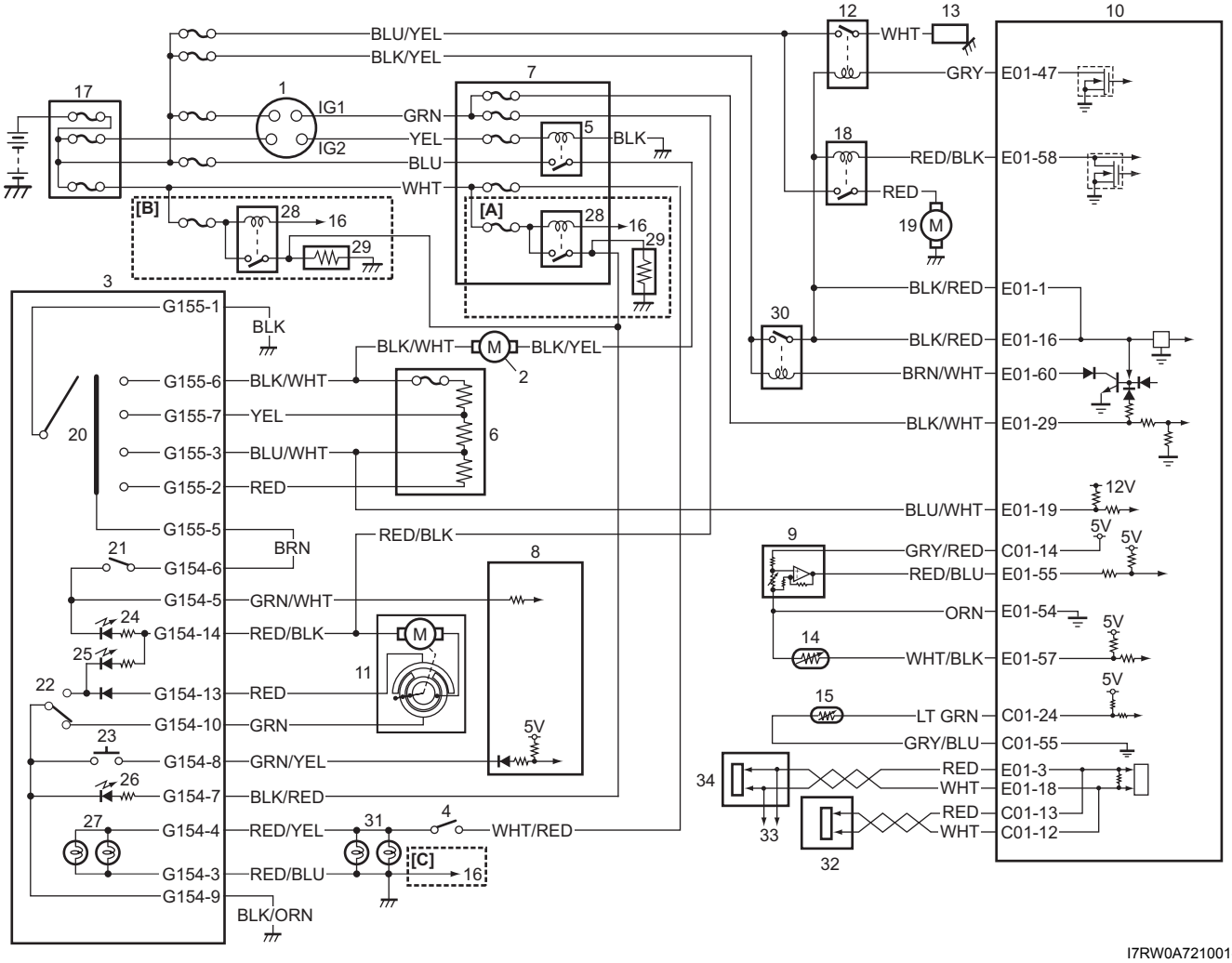

I7RW0A721001-01

[A]: Hatchback model	8. BCM	18. Condenser cooling fan relay	28. Rear defogger relay
[B]: Sedan model	9. A/C refrigerant pressure sensor	19. Condenser cooling fan motor	29. Rear defogger
[C]: Illumination control model	10. ECM	20. Blower speed selector	30. Main relay
1. Ignition switch	11. Air intake control actuator	21. A/C switch	31. Tail light
2. Blower motor	12. Compressor relay	22. Air intake selector	32. TCM
3. HVAC control unit	13. Compressor	23. Rear defogger switch	33. To other control module and DLC
4. Lighting switch	14. Evaporator temperature sensor	24. “A/C” indicator light	34. ABS control module
5. Blower motor relay	15. ECT sensor	25. “REC” indicator light	
6. Blower motor resistor	16. To BCM	26. Rear defogger indicator	
7. Junction block assembly	17. Main fuse box	27. Illumination light	

Manual A/C Electronic Input Output Diagram

S7RW0A7212003

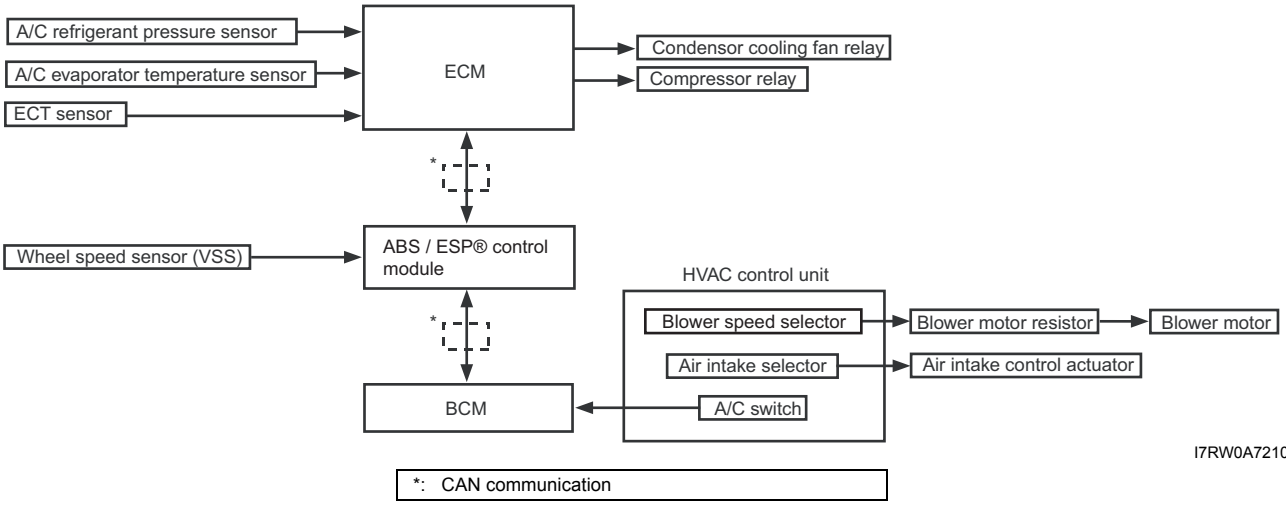

Component Location

A/C System Major Components Location

S7RW0A7213001

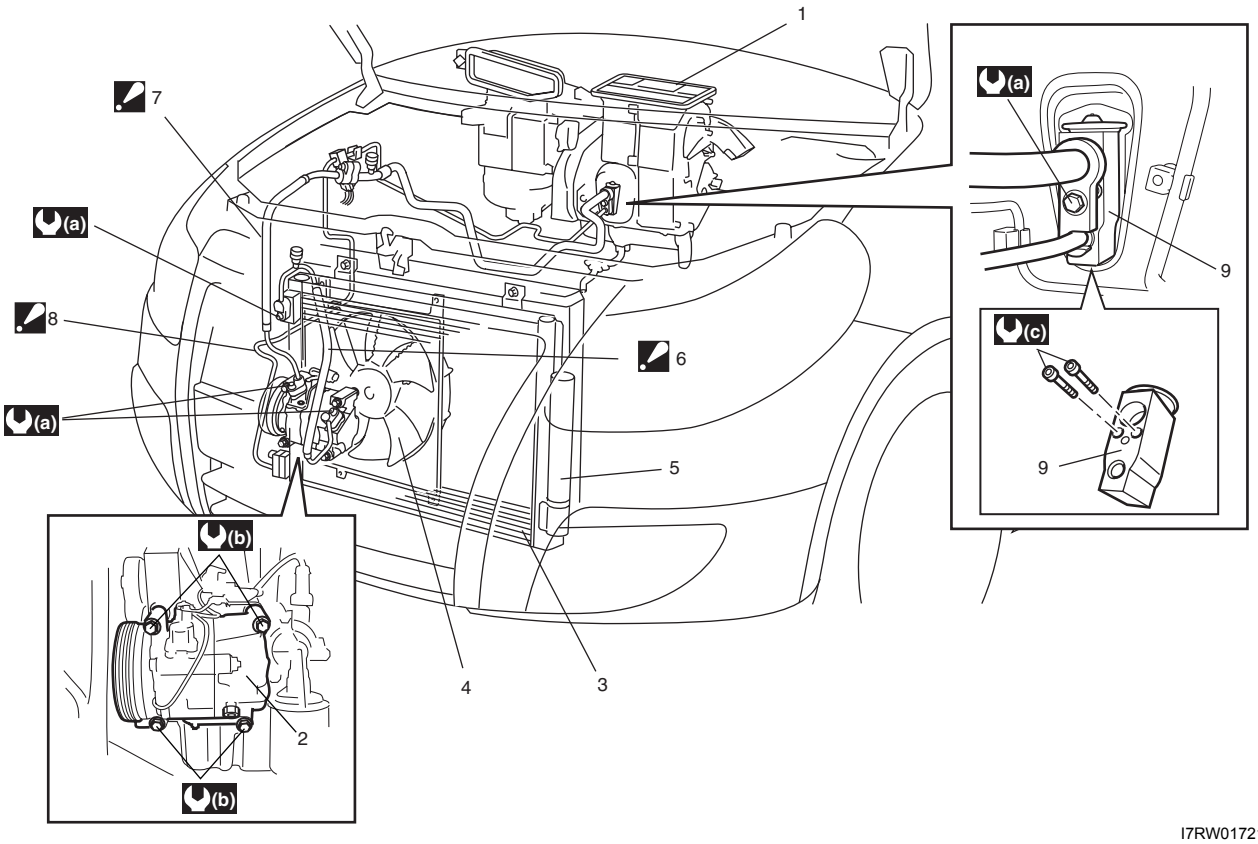

I7RW01721004-03

1. HVAC unit	6. Discharge hose	(b) : 25 N·m (2.5 kgf-m, 18.0 lb-ft)
2. Compressor	7. Suction hose	(c) : 3.5 N·m (0.35 kgf-m, 2.51 lb-ft)
3. Condenser assembly	8. Liquid pipe	: Apply compressor oil to O-ring.
4. Condenser cooling fan	9. Expansion valve	
5. Receiver/dryer	(a) : 11 N·m (1.1 kgf-m, 8.0 lb-ft)	

Electronic Control System Components Location

S7RW0A7213002

NOTE

The figure shows left-hand steering vehicle. For right-hand steering vehicle, parts with (*) are installed at the opposite side.

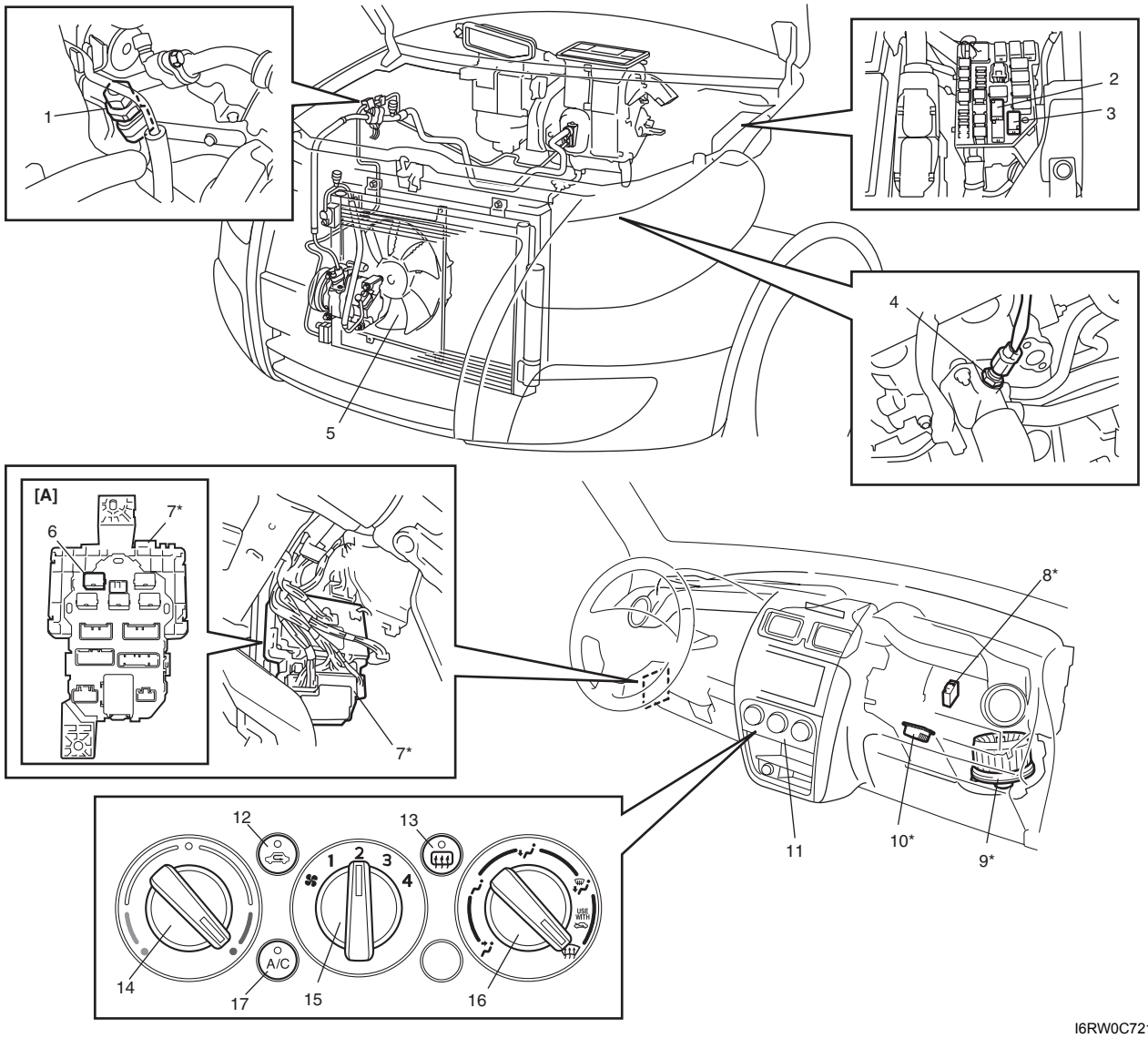

I6RW0C721003-01

[A]: Junction block assembly viewed from relay side	6. Blower motor relay	12. Air intake selector
1. A/C refrigerant pressure sensor	7. Junction block assembly	13. Rear defogger switch
2. Compressor relay	8. Air intake actuator	14. Temperature selector
3. Condenser cooling fan relay	9. Blower motor	15. Blower speed selector
4. ECT sensor	10. Blower motor resistor	16. Air flow selector
5. Condenser cooling fan	11. HVAC control unit	17. A/C switch

Diagnostic Information and Procedures

A/C System Performance Inspection

S7RW0A7214001

1) Confirm that vehicle and environmental conditions are as follows.
   - Vehicle is put indoors.
   - Ambient temperature is within 25 – 35 °C (77 – 95 °F).
   - Relative humidity is within 30 – 70%.
   - There is no wind indoors.
   - HVAC unit is normal.
   - Blower motor is normal.
   - There is no air leakage from air ducts.
   - Condenser fins are clean.
   - HVAC air filter is not clogged with dirt and dust (if equipped).
   - Battery voltage is about 12 V.
   - Radiator cooling fan operates normally.
2) Make sure that high pressure valve (1) and low pressure valve (2) of manifold gauge are firmly closed.
3) Connect high pressure charging hose (3) to high pressure service valve (5) on vehicle and low pressure charging hose (4) to low pressure service valve (6).
4) Bleed the air in charging hoses (3) and (4) by loosening their nuts respectively utilizing the refrigerant pressure. When a hissing sound is heard, immediately tighten nut.

⚠ CAUTION

Do not connect high and low pressure charging hoses in reverse.

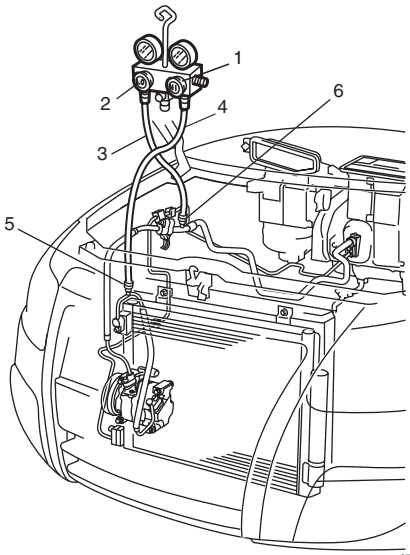

I7RW01721006-01

5) Warm up engine to the normal operating temperature and keep it at the specified idle speed.
6) Turn A/C switch ON, set blower speed selector at maximum speed position, temperature selector at maximum cold position, air flow selector at face position, and air intake selector at recirculation position. (Confirm that A/C compressor, A/C condenser cooling fan and radiator cooling fan are working.)
7) Wait for ten minutes to stabilize the A/C operation.
8) Open all door windows, front doors and engine hood.
9) With about 20 mm (0.8 in.) of dry bulb thermometer (1) put right in front of center ventilation louver and a wet and dry bulb thermometer (2) near air inlet of HVAC unit.

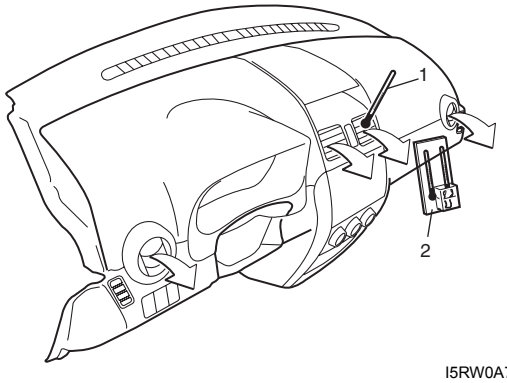

I5RW0A721008-01

10) Check for each pressure of low side and high side if it is within shaded range of graph. If each gauge reading is out of specified pressure, correct defective part referring to the following table.
When diagnosing troubles of abnormal pressure on the low side and high side for each pressure more specifically, refer to “Trouble Diagnosis for Abnormal Pressure: Manual Type”.

NOTE

Pressure registered on gauge varies with ambient temperature. Therefore, use the graphs when determining if pressures are normal or not.

Low side and high side pressure example, Gauges should read as follows when ambient temperature is 30 °C (86 °F)
Pressure on high pressure gauge (HI): 1130 – 1560 kPa (11.4 – 15.6 kgf/cm²)
Pressure on low pressure gauge (LO): 270 – 390 kPa (2.7 – 3.9 kgf/cm²)

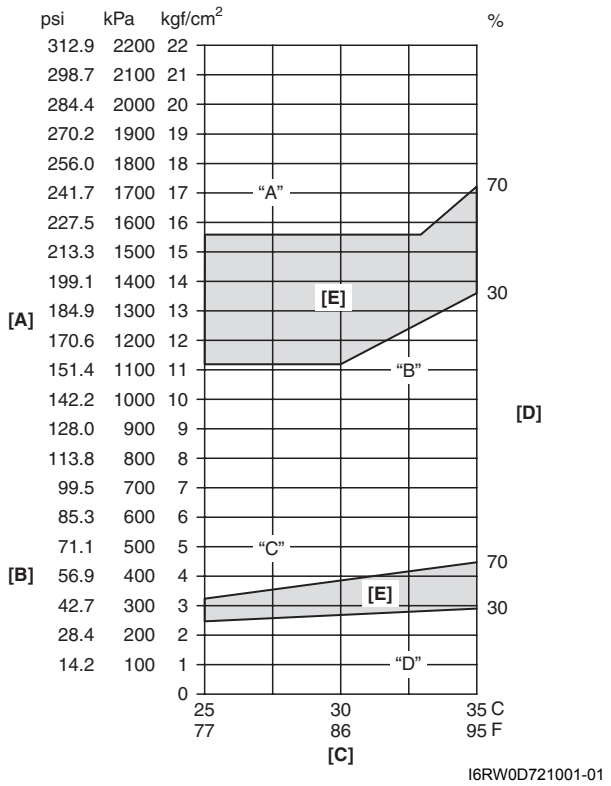

[A]: Pressure of high pressure gauge	[C]: Ambient temperature	[E]: Acceptable range
[B]: Pressure of low pressure gauge	[D]: Humidity	

High pressure gauge

Condition	Possible cause	Correction
Pressure is higher than acceptable range (“A” area)	Refrigerant overcharged	Recharge.
	Expansion valve frozen or clogged	Check expansion valve.
	Clogged refrigerant passage of high pressure side	Clean or replace.
	Condenser cooling fan malfunction (Insufficient cooling of condenser)	Check condenser cooling fan.
	Dirty or bent condenser fins (Insufficient cooling of condenser)	Clean or repair.
	Compressor malfunction (Insufficient oil etc.)	Check compressor.
	Engine overheat	Check engine cooling system referring to “Engine Cooling Symptom Diagnosis in Section 1F”.

Condition	Possible cause	Correction
Pressure is lower than acceptable range (“B” area)	Insufficient refrigerant (Insufficient charge or leakage)	Check for leakage, repair if necessary and recharge.
	Expansion valve malfunction (valve opens too wide)	Check expansion valve.
	Compressor malfunction (Insufficient compression)	Check compressor.

Low pressure gauge

Condition	Possible cause	Correction
Pressure is higher than acceptable range (“C” area)	Expansion valve malfunction (valve opens too wide)	Check expansion valve.
	Compressor malfunction (Insufficient compression)	Check compressor.
Pressure is lower than acceptable range (“D” area)	Insufficient refrigerant (Insufficient charge or leakage)	Check for leakage, repair if necessary and recharge.
	Expansion valve malfunction (valve opens too narrow)	Check expansion valve.
	Clogged refrigerant passage (crashed pipe)	Repair or replace.

11) Check inlet port temperature-to-outlet port temperature relationship using the graph. For example, if temperature near air inlet of HVAC unit is 30 °C (86 °F) and the one at air outlet of center ventilation louver is 17 °C (62.6 °F), their crossing point is within acceptable range as shown in the graph. In this case, cooling performance is satisfactory and proper.

12) If crossing point is out of acceptable range, diagnose trouble referring to the following table.

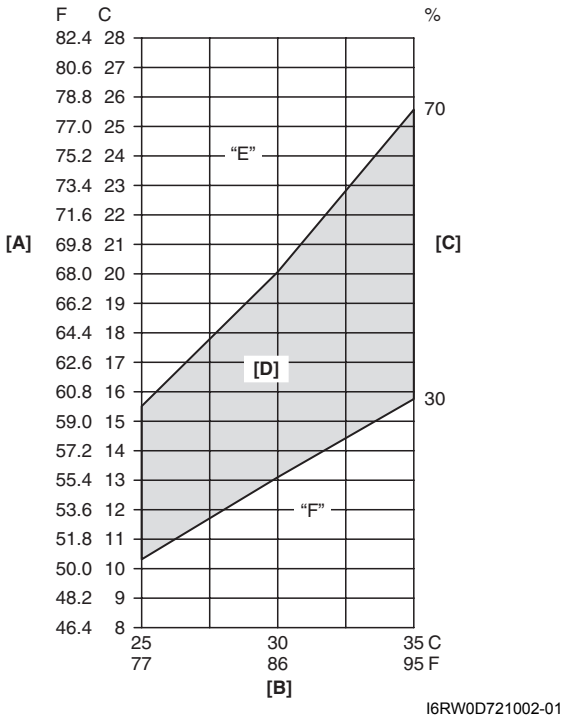

[A]: Temp at air outlet of center ventilation louver	[C]: Humidity
[B]: Temp near air inlet of HVAC unit	[D]: Acceptable range

Thermometer at center ventilation louver

Condition	Possible cause	Correction
Crossing point is higher than acceptable range (“E” area)	Insufficient or excessive charge of refrigerant	Check refrigerant pressure.
	Dirty or bent A/C evaporator fins	Clean or repair.
	Air leakage from cooling (heater) unit or air duct	Repair or replace.
	Malfunctioning, switch over function of door in cooling (heater) unit	Repair or replace.
	Compressor malfunction	Check compressor.
Crossing point is lower than acceptable range (“F” area)	Insufficient air volume from center duct (Heater blower malfunction)	Check blower motor and fan.
	Compressor malfunction	Check compressor.

Trouble Diagnosis for Abnormal Pressure

S7RW0A7214002

NOTE

Normal pressure values on high side and low side in following table are measured when the ambient temperature is 30 °C. As normal pressure values on high side and low side vary depending on the ambient temperature, be sure to perform following steps first when diagnosing troubles.

1. **Measure the ambient temperature and using that value, read the normal value from the graph given in Step 10 of “A/C System Performance Inspection: Manual Type”.**
2. **Put that value in place of the normal pressure in following table.**

Condition			Possible cause	Correction
Manifold gauge	MPa (kgf/cm^2) (psi)	Detail		
Lo	Hi			
0.27 – 0.39 (2.7 – 3.9) (38.8 – 56.0)	1.13 – 1.56 (11.4 – 15.6) (162.3 – 221.8)	Normal condition	—	—
Negative pressure	0.5 – 0.6 (5 – 6) (71.2 – 85.3)	The low pressure side reads a negative pressure, and the high pressure side reads an extremely low pressure. Presence of frost around tubing to and from receiver/dryer and expansion valve.	Dust particles or water droplets are either stuck or frozen inside expansion valve, preventing the refrigerant from flowing.	Replace expansion valve. Replace desiccant and cap with filter. Evacuate the A/C system and recharge with fresh refrigerant.
Normal: 0.27 – 0.39 (2.7 – 3.9) (38.8 – 56.0) ↑↓ Abnormal: Negative pressure	Normal: 1.13 – 1.56 (11.4 – 15.6) (162.3 – 221.8) ↑↓ Abnormal: 0.7 – 1.0 (7 – 10) (100 – 142)	During A/C operation, the low pressure side sometimes indicates negative pressure, and sometimes normal pressure. Also high pressure side reading fluctuates between the abnormal and normal pressure.	Expansion valve is frozen due to moisture in the system, and temporarily shuts off the refrigeration cycle.	Replace expansion valve. Replace desiccant and cap with filter. Evacuate A/C system and recharge with fresh refrigerant.

Condition			Possible cause	Correction
Manifold gauge	MPa (kgf/cm^2) (psi)	Detail		
Lo	Hi			
0.05 – 0.15 (0.5 – 1.5) (4.2 – 21.3)	0.7 – 1.0 (7 – 10) (100 – 142)	Both low and high pressure sides indicate low readings. Output air is slightly cold.	Insufficient refrigerant in system (Refrigerant leaking).	Using leak detector, check for leaks and repair as necessary. Recharge refrigerant to a specified amount. If the pressure reading is almost 0 when the manifold gauges are attached, check for any leaks, repair them, and evacuate the system.
0.4 – 0.6 (4 – 6) (56.9 – 85.3)		Pressure on low pressure side is high. Pressure on high pressure side is low. Both pressure becoming equal right after A/C is turned OFF.	Internal leak in compressor.	Inspect compressor and repair or replace as necessary.
0.40 – 0.45 (4.0 – 4.5) (57 – 64)	2.0 – 2.5 (20 – 25) (285 – 355)	High pressure reading on both low and high pressure sides.	Overcharged A/C system. Faulty condenser cooling operation. Faulty condenser cooling fan operation.	Adjust refrigerant to specified amount. Clean condenser. Inspect and repair condenser cooling fan.
		High pressure reading on both low and high pressure sides. Low pressure side tubing is not cold when touched.	Presence of air in A/C system (Improperly evacuated).	Replace desiccant and cap with filter. Inspect quantity of compressor oil and presence of contaminants in oil. Evacuate system and recharge with fresh refrigerant.
0.45 – 0.55 (4.5 – 5.5) (64 – 78)		High pressure reading on both low and high pressure sides. Large amount of frost or dew on the low pressure side tubing.	Faulty expansion valve. Refrigerant flow is not regulated properly.	Replace expansion valve.

A/C System Inspection at ECM

S7RW0A7214003

When checking voltage at ECM terminals related to A/C system, refer to “Inspection of ECM and Its Circuits in Section 1A”.

A/C System Symptom Diagnosis

S7RW0A7214004

Condition	Possible cause	Correction / Reference Item
No cool air comes out (A/C compressor does not operate)	No refrigerant	*Perform recovery, evacuation and charge referring to "Operation Procedure for Refrigerant Charge: Manual Type".*
	Fuse blown	*Check related fuses, and then check for short circuit to ground.*
	A/C switch faulty	*Check A/C switch referring to "A/C Switch Inspection: Manual Type".*
	Blower speed selector faulty	*Check blower speed selector referring to "Blower Speed Selector Inspection in Section 7A".*
	Evaporator temperature sensor faulty	*Check evaporator temperature sensor referring to "Evaporator Temperature Sensor Inspection: Manual Type".*
	A/C refrigerant pressure sensor faulty	*Check A/C refrigerant pressure sensor referring to "A/C Refrigerant Pressure Sensor and Its Circuit Inspection: Manual Type".*
	Wiring or grounding faulty	*Repair as necessary.*
	ECM faulty	*Check ECM referring to "A/C System Inspection at ECM: Manual Type".*
	Magnet clutch faulty	*Check magnet clutch referring to "Magnet Clutch Inspection: Manual Type".*
	Compressor drive belt loosened or broken	*Adjust or replace drive belt.*
	Compressor faulty	*Check compressor.*
	Compressor relay faulty	*Check compressor relay referring to "A/C System Relay Inspection: Manual Type".*
	BCM faulty	*Check BCM referring to "Inspection of BCM and Its Circuits in Section 10B".*
No cool air comes out (radiator cooling fan motor does not operate)	Fuse blown	*Check related fuses, and then check for short circuit to ground.*
	Wiring or grounding faulty	*Repair as necessary.*
	Condenser cooling fan relay faulty	*Check condenser cooling fan motor relay referring to "A/C System Relay Inspection: Manual Type".*
	Condenser cooling fan motor faulty	*Check condenser cooling fan motor referring to "Condenser Cooling Fan Inspection: Manual Type".*
	ECM faulty	*Check ECM referring to "A/C System Inspection at ECM: Manual Type".*
No cool air comes out (blower motor does not operate)	Fuse blown	*Check related fuses, and then check for short circuit to ground.*
	Blower motor relay faulty	*Check blower motor relay referring to "Blower Motor Relay Inspection in Section 7A".*
	Blower motor resistor faulty	*Check blower motor resistor referring to "Blower Motor Resistor Inspection in Section 7A".*
	Blower speed selector faulty	*Check blower speed selector referring to "Blower Speed Selector Inspection in Section 7A".*
	Wiring or grounding faulty	*Repair as necessary.*
	Blower motor faulty	*Check blower motor referring to "Blower Motor Inspection in Section 7A".*

Condition	Possible cause	Correction / Reference Item
Cool air does not come out or insufficient cooling (A/C compressor normal operation)	Insufficient or excessive charge of refrigerant	*Check the amount of refrigerant and system for leaks.*
	Condenser clogged	*Check condenser referring to "Condenser Assembly On-Vehicle Inspection: Manual Type".*
	A/C evaporator clogged or frosted	*Check A/C evaporator and evaporator temperature sensor referring to "Evaporator Inspection: Manual Type" and "Evaporator Temperature Sensor Inspection: Manual Type".*
	Evaporator temperature sensor faulty	*Check evaporator temperature sensor referring to "Evaporator Temperature Sensor Inspection: Manual Type".*
	Expansion valve faulty	*Check expansion valve referring to "Expansion Valve Inspection: Manual Type".*
	Desiccant clogged	*Check desiccant and cap with filter.*
	Compressor drive belt loosened or broken	*Adjust or replace drive belt.*
	Magnet clutch faulty	*Check magnet clutch referring to "Magnet Clutch Inspection: Manual Type".*
	Compressor faulty	*Check compressor.*
	Air in A/C system	*Replace condenser, and then perform evacuation and charge referring to "Operation Procedure for Refrigerant Charge: Manual Type".*
	Air leaking from HVAC unit or air duct	*Repair as necessary.*
	Heater and ventilation system faulty	*Check HVAC unit.*
	Blower motor faulty	*Check blower motor referring to "Blower Motor Inspection in Section 7A".*
	Excessive compressor oil in A/C system	*Drain excessive compressor oil from A/C system circuit and compressor.*
Cool air does not come out only intermittently	Wiring connection faulty	*Repair as necessary.*
	Evaporator temperature sensor faulty	*Check evaporator temperature sensor referring to "Evaporator Temperature Sensor Inspection: Manual Type".*
	Expansion valve faulty	*Check expansion valve referring to "Expansion Valve Inspection: Manual Type".*
	Excessive moisture in A/C system	*Replace condenser, and then perform evacuation and charge referring to "Operation Procedure for Refrigerant Charge: Manual Type".*
	Magnet clutch faulty	*Check magnet clutch referring to "Magnet Clutch Inspection: Manual Type".*
	Excessive amount of refrigerant	*Check the amount of refrigerant.*
Cool air comes out only at high speed	Condenser clogged	*Check condenser referring to "Condenser Assembly On-Vehicle Inspection: Manual Type".*
	Insufficient charge of refrigerant	*Check the amount of refrigerant and system for leaks.*
	Air in A/C system	*Replace condenser, and then perform evacuation and charge referring to "Operation Procedure for Refrigerant Charge: Manual Type".*
	Compressor drive belt loosened or broken	*Adjust or replace drive belt.*
	Compressor faulty	*Check compressor.*

Condition	Possible cause	Correction / Reference Item
Cool air does not come out only at high speed	Excessive amount of refrigerant	*Check the amount of refrigerant.*
	A/C evaporator frosted	*Check A/C evaporator and evaporator temperature sensor referring to "Evaporator Inspection: Manual Type" and "Evaporator Temperature Sensor Inspection: Manual Type".*
Insufficient air flow of cooled air	A/C evaporator clogged or frosted	*Check A/C evaporator and evaporator temperature sensor referring to "Evaporator Inspection: Manual Type" and "Evaporator Temperature Sensor Inspection: Manual Type".*
	Air leaking from HVAC unit or air duct	*Repair as necessary.*
	Blower motor faulty	*Check blower motor referring to "Blower Motor Inspection in Section 7A".*
	Wiring or grounding faulty	*Repair as necessary.*

Abnormal Noise Symptom Diagnosis of A/C System

S7RW0A7214005

Abnormal Noise from Compressor

Condition	Possible cause	Correction / Reference Item
During compressor operation, a rumbling noise is heard proportional to engine revolutions	Inadequate clearance in scroll area	*Replace compressor.*
A loud noise is heard at a certain rpm, disproportionately to engine revolution	Loose or faulty compressor drive belt	*Adjust drive belt tension or replace drive belt.*
	Loose compressor mounting bolts	*Retighten mounting bolts.*
A loud rattle is heard at low engine rpm	Loose compressor clutch plate bolt	*Retighten clutch plate bolt.* *Replace compressor if it was operated in this condition for a long time.*

Abnormal Noise from Magnetic Clutch

Condition	Possible cause	Correction / Reference Item
A rumbling noise is heard when compressor is not in operation	Worn or damaged bearings	*Replace magnet clutch assembly.*
A chattering noise is heard when compressor is in operation	Faulty magnet clutch clearance (excessive clearance)	*Adjust magnet clutch clearance.*
	Worn magnet clutch friction surface	*Replace magnet clutch assembly.*
	Compressor oil leaked from shaft seal, contaminating the friction surface	*Replace compressor body assembly.*

Abnormal Noise from Tubing

Condition	Possible cause	Correction / Reference Item
A droning noise is heard from inside of the vehicle, but not particularly noticeable in engine compartment	Faulty tubing clamps	*Reposition clamps or increase the number of clamps.*
	Resonance caused by pulsation from variations in refrigerant pressure	*Attach a silencer to tubing, or modify its position and length.*

Abnormal Noise from Condenser Assembly

Condition	Possible cause	Correction / Reference Item
Considerable vibration in condenser assembly	Resonance from condenser assembly bracket and body	*Firmly insert a silencer between condenser assembly bracket and body.*

Abnormal Noise from Crankshaft Pulley

Condition	Possible cause	Correction / Reference Item
A large rattling noise is heard at idle or sudden acceleration	Loosen crankshaft pulley bolt	*Retighten bolt.*

Abnormal Noise from Tension Pulley

Condition	Possible cause	Correction / Reference Item
Clattering noise is heard from pulley	Worn or damaged bearing	*Replace tension pulley.*
Pulley cranks upon contact	Cracked or loose bracket	*Replace or retighten bracket.*

Abnormal Noise from A/C Evaporator

Condition	Possible cause	Correction / Reference Item
Whistling sound is heard from A/C evaporator	Depending on the combination of the interior / exterior temperatures, engine rpm and refrigerant pressure, the refrigerant flowing out of the expansion valve may, under certain conditions, make a whistling sound	*At times, slightly decreasing refrigerant volume may stop this noise.* *Inspect expansion valve and replace if faulty.*

Abnormal Noise from Blower Motor

Condition	Possible cause	Correction / Reference Item
Blower motor emits a chirping sound in proportion to its speed of rotation	Worn or damaged motor brushes or commutator	*Replace blower motor.*
Fluttering noise or large droning noise is heard from blower motor	Leaves or other debris introduced from fresh air inlet to blower motor	*Remove debris and make sure that the screen at fresh air inlet is intact.*

Repair Instructions

Operation Procedure for Refrigerant Charge

S7RW0A7216001

⚠ WARNING

- **Your eyes should not be exposed to refrigerant (liquid).**
  Any liquid HFC-134a (R-134a) escaping by accident shows a temperature as low as approximately –6 °C (21.2 °F) below freezing point. Should liquid HFC-134a (R-134a) is exposed to your eyes, it may cause a serious injury. To protect your eyes from such accident, it is necessary to always wear goggles. Should it occur that HFC-134a (R-134a) is exposed to your eyes, consult a doctor immediately.
  - **Do not use your hand to rub the affected eye(s). Instead, use fresh cold water to splash it over the affected area to gradually raise temperature of such area above freezing point.**
  - **Obtain proper treatment as soon as possible from a doctor or eye specialist.**
- **Should the liquid refrigerant HFC-134a (R-134a) is exposed to your skin, the affected area should be treated in the same manner as when skin is frostbitten or frozen.**
- **Do not handle refrigerant near any place where welding or steam cleaning is performed.**
- **Refrigerant should be kept in a cold and dark place. It should never be stored in any place where temperature is high, e.g. where exposed to direct sun light, close to fire or inside vehicle (including trunk room).**
- **Avoid breathing fume produced when HFC-134a (R-134a) is burned. Such fume may be hazardous to your health.**

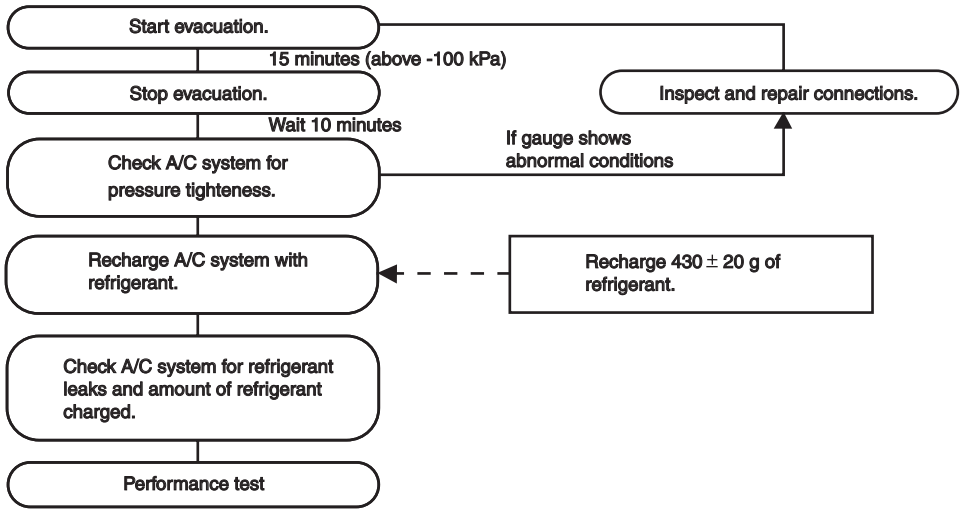

I5RW0A721011-01

Recovery
When discharging refrigerant out of A/C system, always recover it by using refrigerant recovery and recycling equipment because discharging refrigerant HFC-134a (R-134a) into atmosphere would cause adverse effect to environments.

NOTE

- **After recovering refrigerant from system, the amount of removed compressor oil must be measured for replenishing compressor oil.**
- **When handling recovery and recycling equipment, be sure to follow the instruction manual for the equipment.**

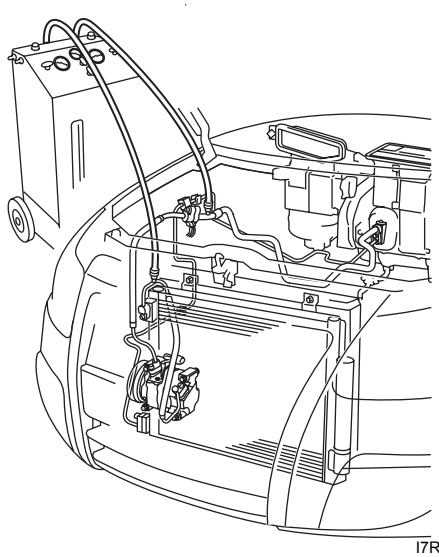

I7RW01721009-01

Replenishing Compressor Oil
It is necessary to replenish specified amount of compressor oil to compressor from compressor suction side hole (1) before evacuating and charging refrigerant.

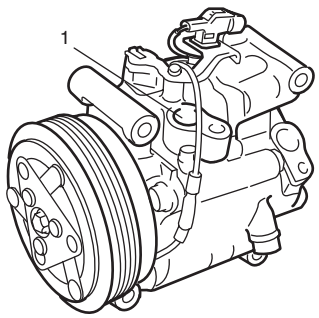

I7RW01721010-01

When charging refrigerant only
When charging refrigerant without replacing any component, replenish the same amount of measured oil when recovering refrigerant (if not measure, replenish 10 cm^3 (10 ml, 0.34 US.oz, 0.35 Imp.oz) oil).

When replacing compressor

⚠ CAUTION

Be sure to use specified compressor oil or an equivalent compressor oil.

Compressor oil is sealed in each new compressor by the amount required for A/C system. Therefore, when using a new compressor, drain the calculated amount of oil from it.
"C" = "A" – "B"
"C": Amount of oil to be drained
"A": Amount of oil in a new compressor
"B": Amount of oil in removed compressor

NOTE

Compressor assembly supplied from factory is filled up with the following amount of oil.

: Compressor oil 99000–99015–00A (MATSUSHITADENKI GU10)

Oil amount in compressor
75 + 10, – 0 cm^3 (75 + 10, – 0 ml, 2.54 + 0.34, – 0 US.oz, 2.64 + 0.35, – 0 Imp.oz)

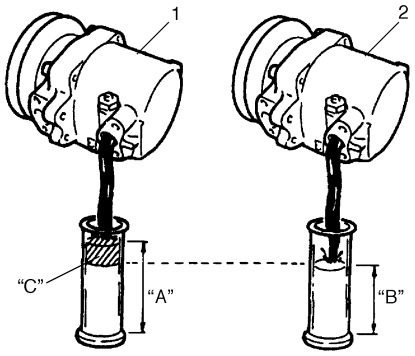

I2RH01720015-01

1.	New compressor
2.	Removed compressor

When replacing other parts
Replenish the following amount of oil to compressor.

Amount of compressor oil to be replenished
Evaporator: 15 cm^3 (15 ml, 0.51 US.oz, 0.53 Imp.oz)
Condenser: 10 cm^3 (10 ml, 0.34 US.oz, 0.35 Imp.oz)
Dryer: 10 cm^3 (10 ml, 0.34 US.oz, 0.35 Imp.oz)
Hoses: 5 cm^3 (5 ml, 0.17 US.oz, 0.18 Imp.oz) each
Pipes: 5 cm^3 (5 ml, 0.17 US.oz, 0.18 Imp.oz) each

Evacuation

⚠ CAUTION

Do not evacuate before recovering refrigerant in A/C system.

NOTE

Once air conditioning system circuit is opened (exposed) to atmospheric air, system must be evacuated by using a vacuum pump. The A/C system should be attached with a manifold gauge set, and should be evacuated for approximately 15 minutes.

1) Connect high charging hose (1) and low charging hose (2) of manifold gauge set (3) (special tool) respectively as follows:
   High charging hose → High pressure charging valve (4) on discharge hose
   Low charging hose → Low pressure charging valve (5) on suction pipe

   Special tool
   (A): 09990–06020

2) Attach center charging hose (6) of manifold gauge set to vacuum pump (7).
3) Operate vacuum pump, and then open discharge side valve (Hi) (8) of manifold gauge set.
   If there is no blockage in the system, there will be an indication on high pressure gauge (9).
   When this occurs, open the other side valve (Lo) (10) of the set.
4) Approximately 10 minutes later, low pressure gauge (11) should show a vacuum lower than –100 kPa (–1.0 kgf/cm^2, –760 mmHg, –14.7 psi) providing no leakage exists.

NOTE

- **If the system does not show a vacuum below –100 kPa (–1.0 kgf/cm^2, –760 mmHg, –14.7 psi), close both valves, stop vacuum pump and watch movement of low pressure gauge.**
- **Increase in the gauge reading suggests existence of leakage. In this case, repair the system before continuing its evacuation.**
- **If the gauge shows a stable reading (suggesting no leakage), continue evacuation.**

5) Evacuation should be carried out for a total of at least 15 minutes.
6) Continue evacuation until low pressure gauge indicates a vacuum less than –100 kPa (–1.0 kgf/cm^2, –760 mmHg, –14.7 psi), and then close both valves.
7) Stop vacuum pump. Disconnect center charging hose from pump inlet. Now, the system is ready for charging refrigerant.

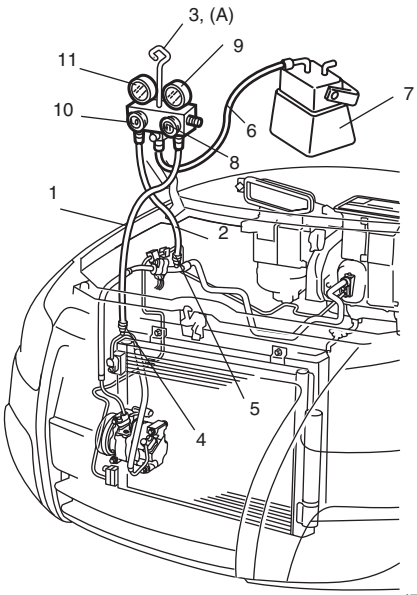

I7RW01721011-01

Checking A/C System for Pressure Leaks

After completing the evacuation, close manifold gauge high pressure valve and low pressure valve and wait 10 minutes. Verify that low pressure gauge reading has not changed.

⚠ CAUTION

If the gauge reading moves closer to "0", there is a leak somewhere. Inspect the tubing connections and make necessary corrections. And then, evacuate system once again and make sure that there are no leaks.

Charge

⚠ CAUTION

- **Because the sight glass is not used for this A/C system, do not perform an additional charge to the A/C system. To charge the proper amount of refrigerant, recover and evacuate the A/C system first. And then, charge the proper amount of refrigerant into the A/C system.**
- **Always charge refrigerant through low pressure side of A/C system after the initial charge is performed from the high pressure side with the engine stopped.**
- **Never charge refrigerant through high pressure side of A/C system with engine running.**
- **Do not charge refrigerant while compressor is hot.**
- **When installing tap valve to refrigerant container to make a hole there through, carefully follow directions given by manufacturer.**
- **A pressure gauge should always be used before and during refrigerant charge.**
- **The refrigerant container should be emptied of refrigerant when discarding it.**
- **The refrigerant container should not be heated up to 40 °C (104 °F) or over.**
- **Refrigerant container should not be reversed in direction during refrigerant charge. Reversing in direction causes liquid refrigerant to enter compressor, causing troubles, such as compression of liquid refrigerant and the like.**

NOTE

The air conditioning system contains HFC-134a (R-134a).
Described here is a method to charge the air conditioning system with refrigerant from the refrigerant service container.
When charging refrigerant recovered by using the refrigerant and recycling equipment (when recycling refrigerant), follow the procedure described in the equipment manufacturer's instruction manual.

The initial charge of the A/C system is performed through the high pressure side with the engine stopped. And next, this method must be followed by charging from the low pressure side with the engine running.

1) Check if hoses are routed properly after evacuating the system.
2) Connect low charging hose (1) and high charging hose (2) of the manifold gauge set (3) in position. Then, open refrigerant container valve (4) to purge the charging line.
3) Open the high pressure side valve (5) and charge refrigerant to system.
4) After a while, open the low pressure side valve (6) and close the high pressure side valve.

⚠ WARNING

Make sure that high pressure side valve is closed securely.

5) Start engine and keep engine speed at 1500 r/min, and then operate A/C system.
6) Charge A/C system with refrigerant in vapor state. At this time, refrigerant container should be held upright.

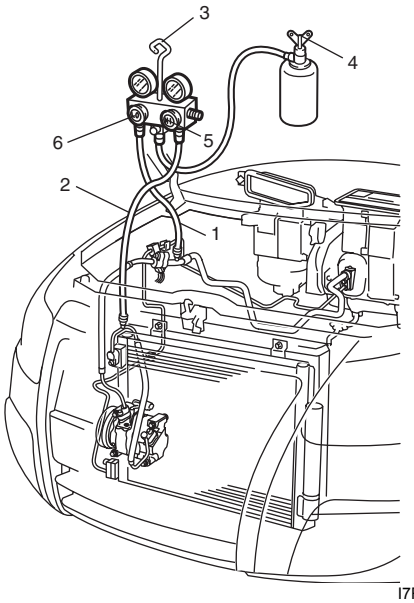

I7RW01721012-01

7) When refrigerant container (1) is emptied, use the following procedure to replace it with a new refrigerant container.
   a) Close low pressure valve.
   b) Replace empty container with a refrigerant container which has been charged with refrigerant. When using refrigerant container tap valve (2), use the following procedure for replacement.
      i) Retract needle (3) and remove refrigerant container tap valve by loosening its plate nut (4).
      ii) Install the refrigerant container tap valve to a new refrigerant container.

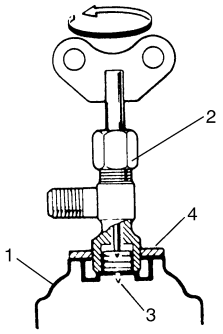

I2RH01720018-01

   c) Purge any air existing in center charging hose. When using refrigerant container tap valve, use the following procedure to purge air.
      i) Once fully tighten refrigerant container tap valve (1), and then loosen (open) plate nut (2) slightly.
      ii) Open low pressure side valve (3) of manifold gauge set (4) a little.
      iii) As soon as refrigerant comes out with a “hiss” through a clearance between refrigerant container and tap valve, tighten plate nut as well as low pressure side valve.
      iv) Turn handle of tap valve clockwise so that its needle is screwed into the new container to make a hole for refrigerant flow.

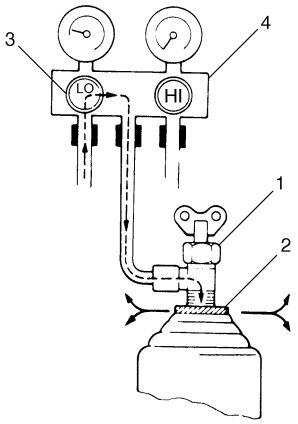

I2RH01720019-01

8) After the system has been charged with specified amount of refrigerant or when low pressure gauge (1) and high pressure gauge (2) have indicated the following specified value, close low pressure side valve (3) on manifold gauge set (4).

Specified amount of refrigerant
430 ± 20 g (15.2 ± 0.7 oz))

Low side and high side pressure example

Gauges should read as follows when ambient temperature is 30 °C (86 °F).	
Pressure on high pressure gauge	**1130 – 1560 kPa (11.4 – 15.6 kgf/cm²) (162.3 – 221.8 psi)**
Pressure on low pressure gauge	**270 – 390 kPa (2.7 – 3.9 kgf/cm²) (38.8 – 56.0 psi)**

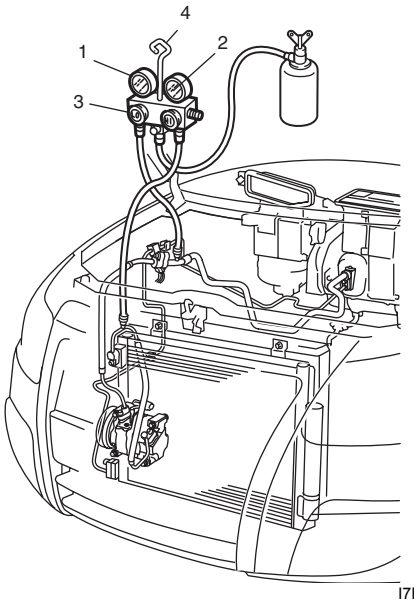

I7RW01721013-02

Removal of Manifold Gauge Set

⚠ WARNING

High pressure side is under high pressure. Therefore, be careful not to get injured especially on your eyes and skin.

For the A/C system charged with the specified amount of refrigerant, remove manifold gauge set as follows:

1) Close low pressure side valve of manifold gauge set. (The high pressure side valve is closed continuously during the process of charging.)
2) Close refrigerant container valve.
3) Stop engine.
4) Using shop rag, remove charging hoses from service valves. This operation must be performed quickly.
5) Put caps on service valves.

Check A/C System for Refrigerant Leaks
Whenever a refrigerant leak is suspected in the system or any service operation has been performed which may result in malfunction of lines and connections, it is advisable to check for leaks.
Common sense should be used during refrigerant leak test, since the need and extent of any such test will, in general, depend upon the nature of a complaint and the type of a service performed on the system.

Liquid leak detector

⚠ WARNING

- **To prevent explosions and fires, make sure that there are no flammables in the vicinity.**
- **When the refrigerant exposed to fire, it turns into a poisonous gas (phosgene). Do not inhale this gas.**

There is a number of fittings and places throughout the A/C system where a liquid leak detector solution may be used to pinpoint refrigerant leaks.
By merely applying the solution to the area in question with a swab, such as attached to the cap of a vial, bubbles will form within seconds if there is a leak.
For confined areas, such as sections of the evaporator and condenser, an electronic (refrigerant) leak detector is more practical for determining leaks.

Special tool
(A): 09990–86012

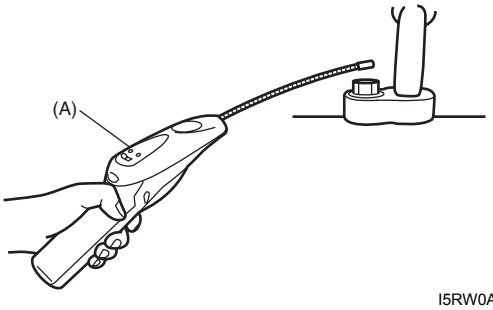

I5RW0A721054-01

Condenser Cooling Fan Removal and Installation

S7RW0A7216002

⚠ CAUTION

Be careful not to damage fins of radiator. If radiator fin is bent, straighten it by using flat head screwdriver or pair of pliers.

Removal

1) Disconnect negative (–) cable at battery.
2) Disconnect condenser cooling fan motor coupler.
3) Remove reservoir (1) from radiator.
4) Remove condenser cooling fan (2) from radiator (3).

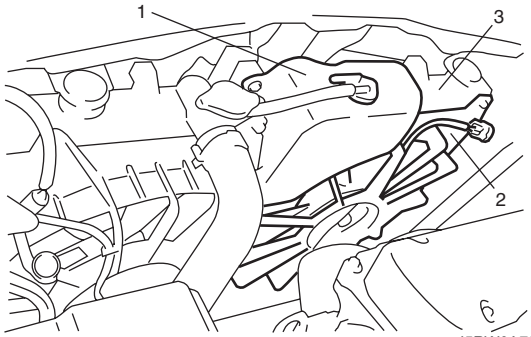

I5RW0A721017-01

Installation
Reverse removal procedure to install condenser cooling fan.

Condenser Cooling Fan Inspection

S7RW0A7216003

1) Check condenser cooling fan motor for resistance between terminal “a” and “b” as shown.
   If there is no continuity, replace condenser cooling fan motor.

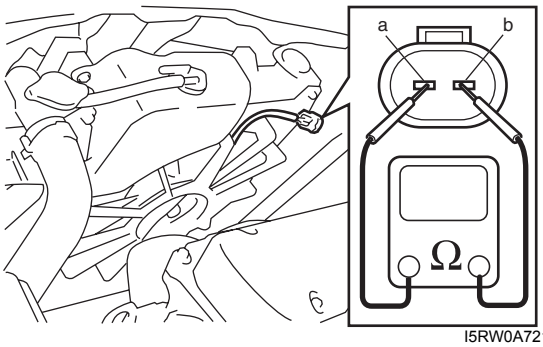

I5RW0A721018-02

2) Connect battery to condenser cooling fan motor terminal “a” and “b” as shown in figure, and then check if the condenser cooling fan motor operates smoothly.

   Reference
   Condenser cooling fan specified current at 12 V: 7 A maximum

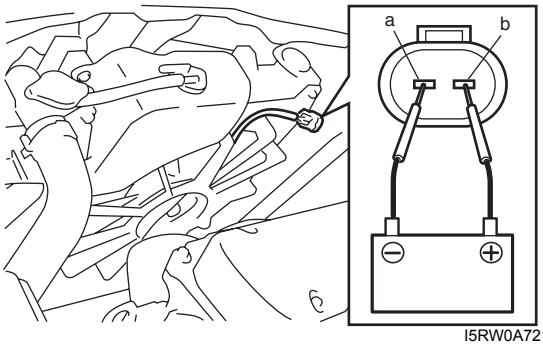

I5RW0A721019-02

Condenser Assembly On-Vehicle Inspection

S7RW0A7216004

Check the followings.

- Clog of condenser fins
  If any clog is found, condenser fins should be washed with water and should be dried with compressed air.
- Condenser fins for leakage and breakage
  If any defects are found, repair or replace condenser.
- Condenser fittings for leakage.
  If any defects are found, repair or replace condenser.

Condenser Assembly Removal and Installation

S7RW0A7216005

⚠ CAUTION

Do not damage condenser fins. If condenser fin is bent, straighten it by using flat head screwdriver or pair of pliers.

Removal

1) Recover refrigerant from A/C system referring to “Operation Procedure for Refrigerant Charge: Manual Type”.

   NOTE

   The amount of removed compressor oil must be measured for replenishing compressor oil.

2) Remove front bumper referring to “Front Bumper and Rear Bumper Components in Section 9K”.
3) Disconnect discharge hose (1) and liquid pipe (2) from condenser assembly (3).
4) Remove radiator assembly and condenser assembly mounting bolts (4).

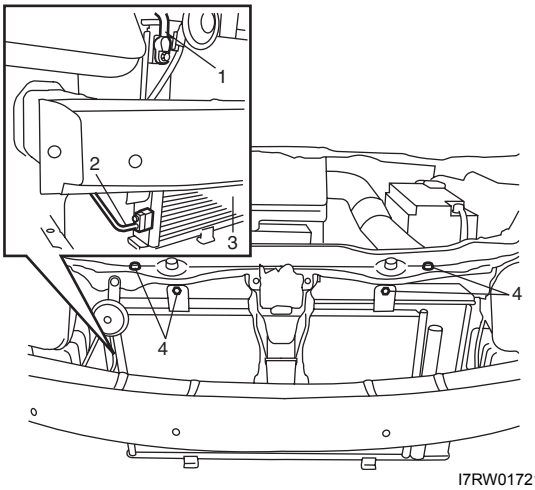

I7RW01721025-04

5) Move condenser assembly from the vehicle in the arrow direction in the order of 1, 2 and 3 as shown, and it can be removed.

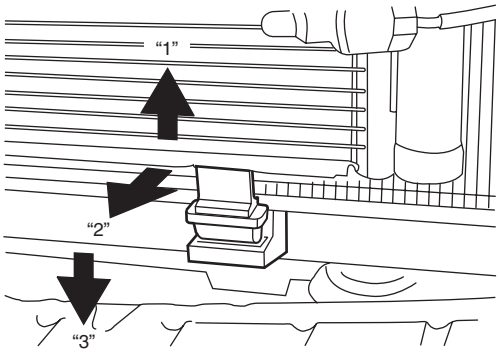

I5RW0A721021-02

Installation

Reverse the removal procedure to install condenser noting the following instructions.

- Replenish specified amount of compressor oil to compressor suction side referring to "Replenishing Compressor Oil" in "Operation Procedure for Refrigerant Charge: Manual Type".
- Evacuate and charge the A/C system referring to "Evacuation" and "Charge" in "Operation Procedure for Refrigerant Charge: Manual Type".

Desiccant Removal and Installation

S7RW0A7216006

Removal

1) Remove condenser assembly referring to "Condenser Assembly Removal and Installation: Manual Type".
2) Remove circlip (4) using special tool.

   Special tool
   : 09900–06107

3) Remove the cap (1) from the receiver / dryer tank (2).
4) Remove desiccant (3).

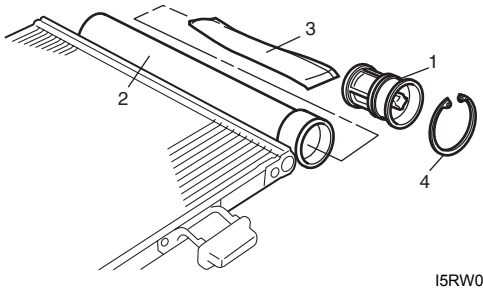

I5RW0A721022-01

Installation

Reverse the removal procedure noting the following instructions.

- Replenish specified amount of compressor oil to compressor suction side referring to "Operation Procedure for Refrigerant Charge: Manual Type".
- Do not remove desiccant from the plastic bag until just before inserting it into the receiver.
- Apply compressor oil to O-ring (1).
- Be sure to install circlip (2) with its flat face (3) directed to cap.
- Install condenser assembly referring to "Condenser Assembly Removal and Installation: Manual Type".
- Evacuate and charge the A/C system referring to "Evacuation" and "Charge" in "Operation Procedure for Refrigerant Charge: Manual Type".

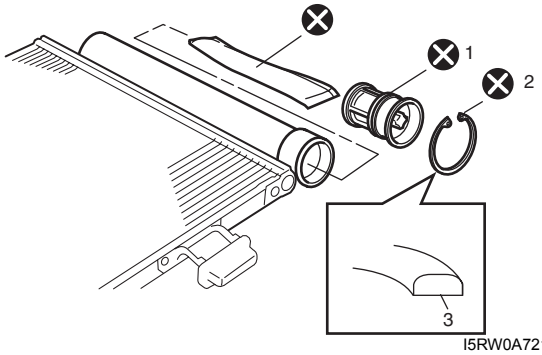

I5RW0A721052-01

⊗ : Do not reuse

HVAC Unit Components

S7RW0A7216007

NOTE

The figure shows left-hand steering vehicle. For right-hand steering vehicle, parts with (*) are installed at the opposite side.

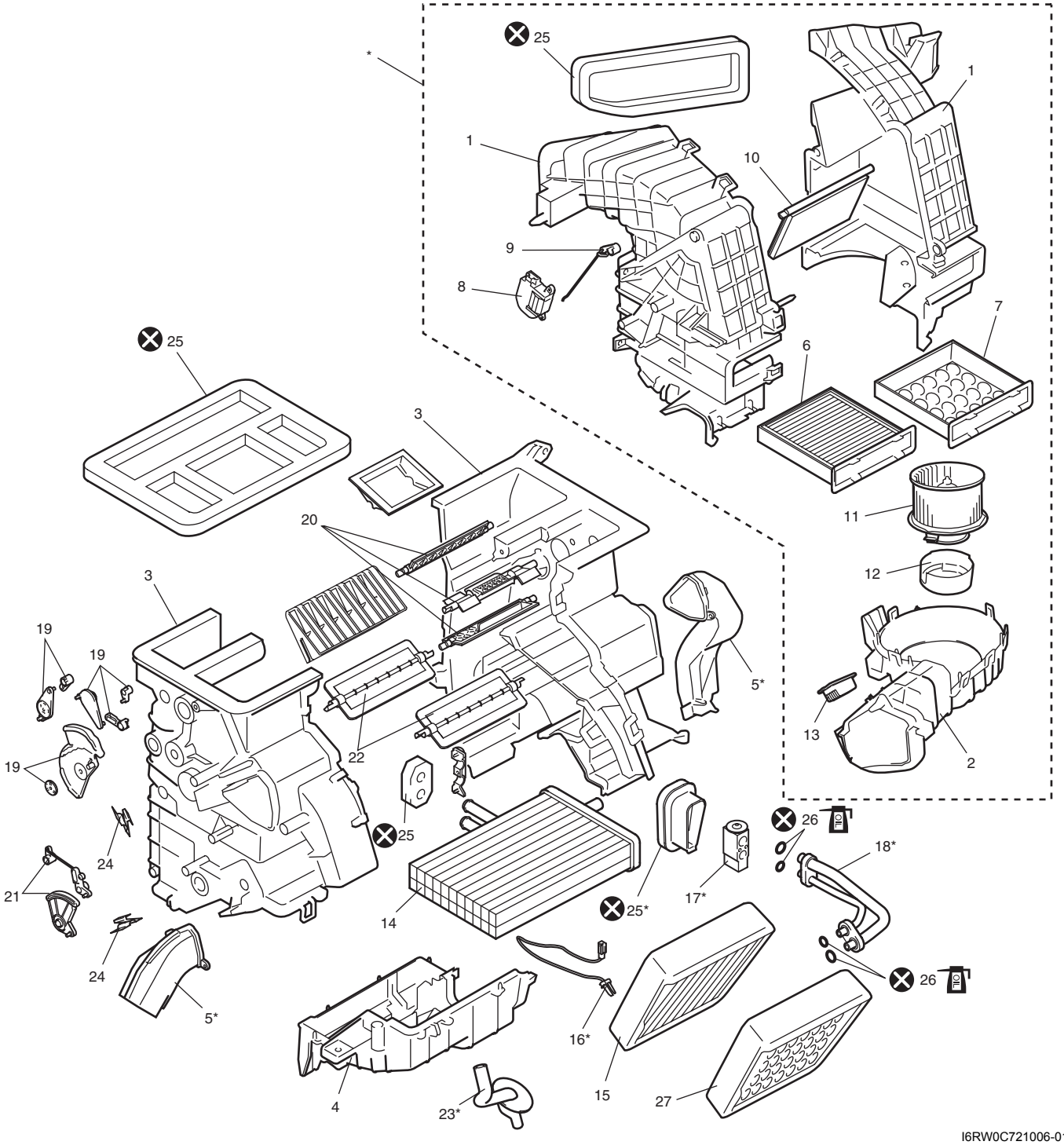

I6RW0C721006-01

1. Blower upper case	8. Air intake control actuator	15. Evaporator	22. Temperature control door assembly
2. Blower lower case	9. Air intake control link	16. Evaporator temperature sensor	23. Drain hose
3. Heater unit upper case	10. Air intake control door	17. Expansion valve	24. Cable lock clamp
4. Heater unit lower case	11. Blower motor	18. Expansion pipe	25. Packing
5. Foot duct	12. Blower motor cap	19. Air flow control lever	26. O-ring : Apply compressor oil.
6. HVAC air filter (if equipped)	13. Blower motor resister	20. Air flow control door assembly	27. Resistance board (non-A/C)

7. Cover (without HVAC air filter)	14. Heater core	21. Temperature control lever	⊗ : Do not reuse.

HVAC Unit Removal and Installation

S7RW0A7216008

Removal

1) Recover refrigerant from A/C system with recovery and recycling equipment referring to “Recovery” in “Operation Procedure for Refrigerant Charge: Manual Type”.
2) Drain engine coolant referring to “Cooling System Draining in Section 1F”, and then disconnect heater hoses from HVAC unit.
3) Remove cowl top cover from vehicle body referring to “Cowl Top and Front Lower Crossmember Components in Section 9K”.
4) Remove instrument panel from vehicle body referring to “Instrument Panel Removal and Installation in Section 9C”.
5) Loosen a bolt (1) and remove pipes from expansion valve (2).

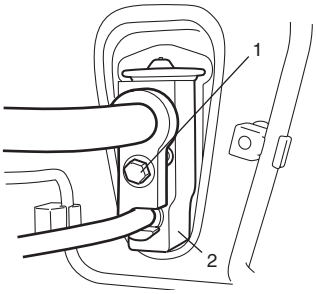

I7RW01721016-01

6) Remove HVAC unit (1) from vehicle body by removing nuts (2).

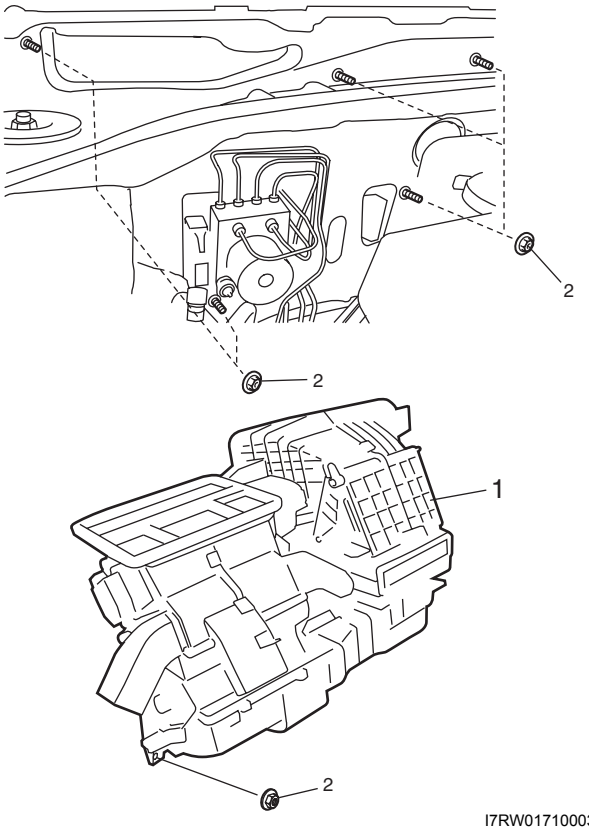

I7RW01710003-01

Installation

Reverse removal procedure noting the following instructions.

- Replenish specified amount of compressor oil to compressor suction side referring to “Replenishing Compressor Oil” in “Operation Procedure for Refrigerant Charge: Manual Type”.
- Install the padding (1) to the installation hole uniformly.

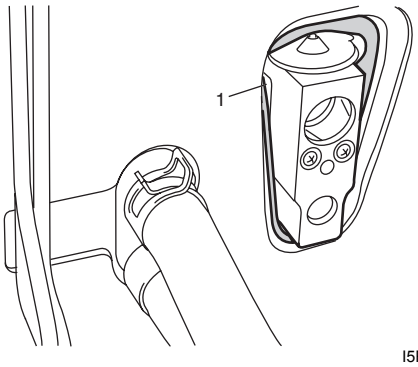

I5RW0A721025-02

- Evacuate and charge the A/C system referring to “Evacuation” and “Charge” in “Operation Procedure for Refrigerant Charge: Manual Type”.
- Refill cooling system with coolant referring to “Cooling System Flush and Refill in Section 1F”.
- Adjust control cables referring to “HVAC Control Unit Removal and Installation in Section 7A”. (vehicle with manual type A/C)

Evaporator Inspection

S7RW0A7216009

Check the followings.

- Clog of A/C evaporator fins.
  If any clogs are found, A/C evaporator fins should be washed with water, and then should be dried with compressed air.
- A/C evaporator fins for leakage and breakage.
  If any defects are found, repair or replace A/C evaporator.
- A/C evaporator fittings for leakage.
  If any defects are found, repair or replace A/C evaporator.

Evaporator Temperature Sensor Removal and Installation

S7RW0A7216010

Removal

1) Remove HVAC unit from vehicle body referring to “HVAC Unit Removal and Installation: Manual Type”.
2) Remove evaporator temperature sensor (1) from evaporator by (2) disassembling HVAC unit.

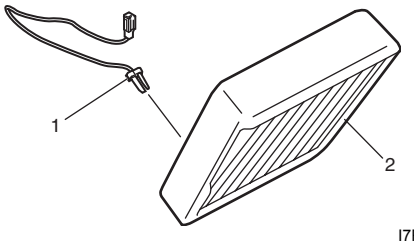

I7RW01721018-01

Installation

Reverse the removal procedure noting the following instruction.

- Install evaporator temperature sensor (1) onto evaporator (2) as shown.

LH steering vehicle

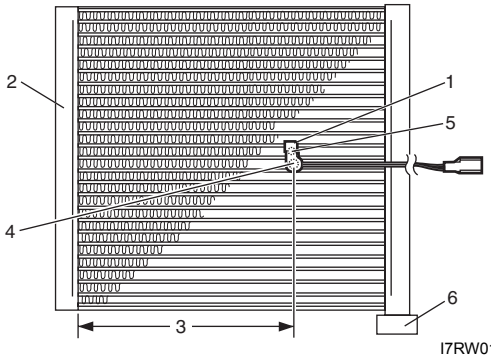

I7RW01721026-01

RH steering vehicle

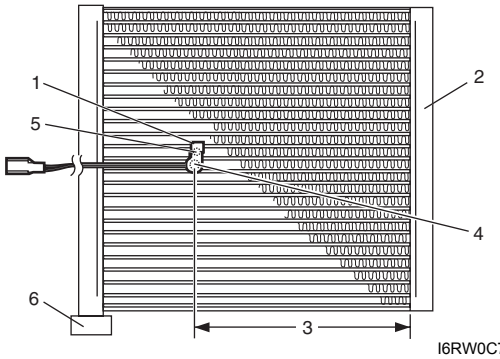

I6RW0C721007-01

3.	138 ± 5 mm (3.3 ± 0.2 in.)
4.	Sensor part fixed to 12th fin from pipe fitting side
5.	Holding part fixed to 13th fin from pipe fitting side
6.	Pipe fitting

Evaporator Temperature Sensor Inspection

S7RW0A7216011

Check resistance between terminals of evaporator temperature sensor (1).
If check results are as not specified, replace evaporator temperature sensor.

Evaporator temperature sensor resistance
0 °C (32 °F): 6.6 – 6.8 kΩ
25 °C (77 °F): 2.0 – 2.1 kΩ

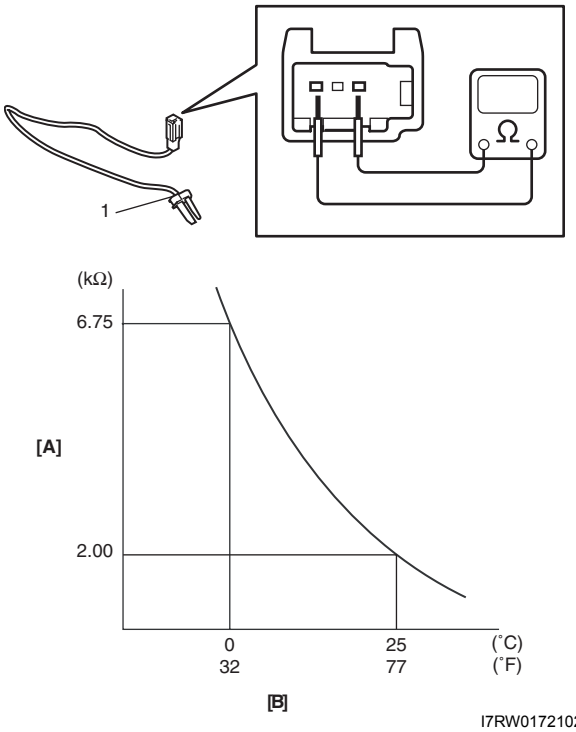

I7RW01721020-01

[A]: Resistance	[B]: Temperature

Expansion Valve Removal and Installation

S7RW0A7216012

Removal

1) Recover refrigerant from the A/C system with recovery and recycling equipment referring to “Recovery” in “Operation Procedure for Refrigerant Charge: Manual Type”.
2) Loosen a bolt (1) and remove pipes from expansion valve (2).
3) Loosen bolts (3) and remove expansion valve.

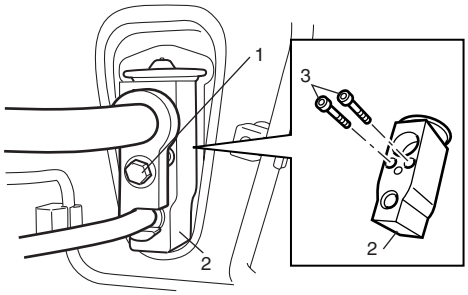

I4RS0A720028-01

Installation

Reverse removal procedure noting the following instructions.

- Apply compressor oil to O-ring of expansion valve and pipes.
- Tighten expansion valve bolts to specified torque.

  Tightening torque
  Expansion valve bolt: 4.5 N·m (0.45 kgf-m, 3.5 lb-ft)

- Evacuate and charge the A/C system referring to “Evacuation” and “Charge” in “Operation Procedure for Refrigerant Charge: Manual Type”.

Expansion Valve Inspection

S7RW0A7216013

Refer to “A/C System Performance Inspection: Manual Type”.

A/C Refrigerant Pressure Sensor and Its Circuit Inspection

S7RW0A7216014

1) Disconnect A/C refrigerant pressure sensor connector.
2) Turn ignition switch to ON position.
3) Check if voltage between “RED” wire terminal and “ORN” wire terminal of A/C refrigerant pressure sensor connector is 4.75 V to 5.25 V.
   If not, check A/C refrigerant pressure sensor circuit.
4) Connect A/C refrigerant pressure sensor connector with ignition switch turned OFF.
5) Connect manifold gauge set to the charging valves.
6) Check A/C refrigerant pressure sensor voltage of ECM connector referring to “A/C System Inspection at ECM: Manual Type”.
   If voltage is not as specified below, replace A/C refrigerant pressure sensor.

A/C refrigerant pressure sensor voltage specifications (A/C refrigerant pressure measured by manifold gauge)
0.8 MPa (8.0 kgf/cm^2, 116 psi): 1.40 – 1.78 V
1.4 MPa (14 kgf/cm^2, 203 psi): 2.18 – 2.64 V
1.6 MPa (16 kgf/cm^2, 232 psi): 2.44 – 2.92 V
1.8 MPa (18 kgf/cm^2, 261 psi): 2.70 – 3.21 V

A/C Refrigerant Pressure Sensor Removal and Installation

S7RW0A7216015

Removal

1) Recover refrigerant from the A/C system with the recovery and recycling equipment referring to “Recovery” in “Operation Procedure for Refrigerant Charge: Manual Type”.
2) Disconnect negative (–) cable from battery.
3) Disconnect A/C refrigerant pressure sensor connector.
4) Remove A/C refrigerant pressure sensor (1) from liquid pipe (2).

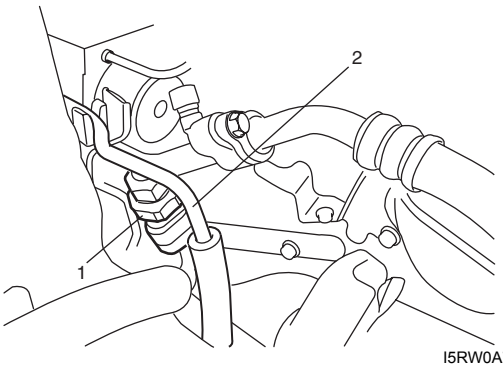

I5RW0A721029-01

Installation

Reverse removal procedure noting the following instructions.

- Apply compressor oil to O-ring of A/C refrigerant pressure sensor.
- Tighten A/C refrigerant pressure sensor to specified torque.

  Tightening torque
  A/C refrigerant pressure sensor (a): 11 N·m (1.1 kgf-m, 8.0 lb-ft)

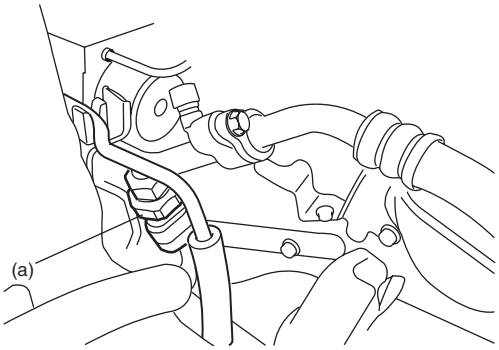

I5RW0A721030-01

- Evacuate and charge the A/C system referring to “Evacuation” and “Charge” in “Operation Procedure for Refrigerant Charge: Manual Type”.

A/C Switch Inspection

S7RW0A7216016

- Check that there is continuity between terminal (1) and terminal (2) when A/C switch is at ON position.
- Check that there is no continuity between terminal (1) and terminal (2) when A/C switch is at OFF position.

If check result does not meet the above conditions, replace HVAC control unit.

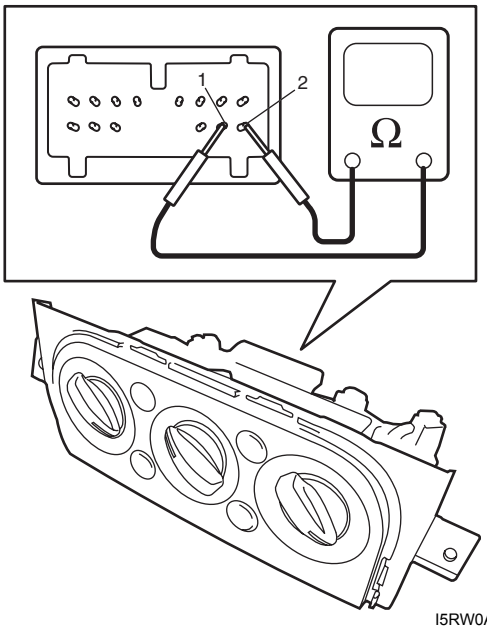

I5RW0A721031-01

A/C System Relay Inspection

S7RW0A7216017

NOTE

Do not use blue relay for the substitute of white relay because internal durability of a blue relay is different from the durability of a white relay.

1) Disconnect negative (–) cable from battery.
2) Remove compressor relay (1) or condenser cooling fan relay (2) from main fuse box (3).
3) Check that there is no continuity between terminal “c” and “d”. If there is continuity, replace relay.
4) Connect battery positive (+) terminal to terminal “b” of relay and battery negative (–) terminal to terminal “a” of relay, and then check continuity between terminal “c” and “d”. If there is no continuity, replace relay.

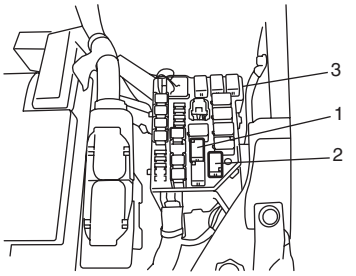

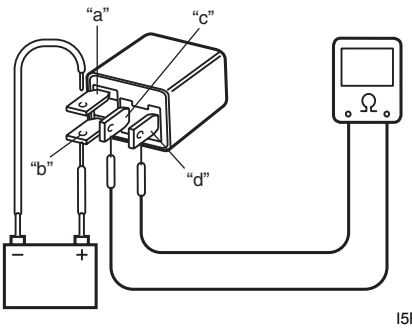

I5RW0B721023-01

Compressor Drive Belt Inspection and Adjustment

S7RW0A7216018

Inspection

- Check compressor drive belt (1) for wear, crack, deformation and cleanliness. If any defect is found, replace the belt with new one referring to “Compressor Drive Belt Removal and Installation: Manual Type”.
- Check compressor drive belt tension by measuring how much it deflects when pushed intermediate point between magnet clutch pulley (6) and crankshaft pulley (3) with about 100 N (10 kg) force after rotating crankshaft pulley 360°. If belt tension is out of specification, adjust belt tension referring to “Adjustment”.

Compressor drive belt tension “a”
: 7 – 8 mm (0.28 – 0.31 in.)

NOTE

When replacing drive belt, adjust drive belt tension to the following specifications.

New compressor drive belt tension “a”
: 6 – 7 mm (0.24 – 0.28 in.)

Adjustment

1) Loosen tension pulley nut (4).
2) Adjust belt tension by tighten or loosen tension pulley adjusting bolt (5).
3) Tighten tension pulley nut.
4) Rotate the crankshaft pulley 360°, and then recheck belt tension.

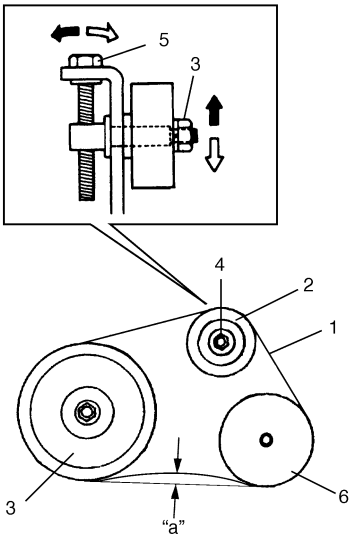

I5RW0A721033-01

2. Tension pulley

Compressor Drive Belt Removal and Installation

S7RW0A7216019

Removal

1) Loosen tension pulley nut (1).
2) Loosen belt tension loosening tension pulley adjusting bolt (2).
3) Remove compressor drive belt (3).

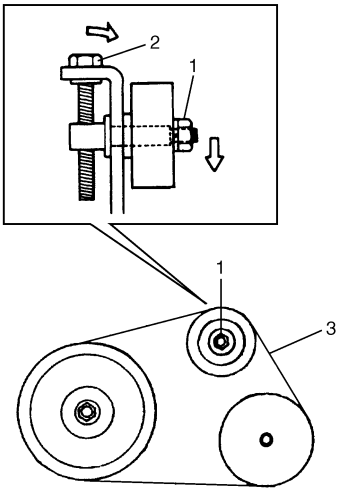

I5RW0A721034-01

Installation

Reverse removal procedure noting the following instruction.

- Adjust belt tension referring to “Compressor Drive Belt Inspection and Adjustment: Manual Type”.

Compressor Assembly Removal and Installation

S7RW0A7216020

Removal

1) Run engine at idle speed with A/C ON for 10 minutes.
2) Stop the engine.
3) Disconnect negative (–) cable from battery.
4) Recover refrigerant from the A/C system with recovery and recycling equipment referring to “Recovery” in “Operation Procedure for Refrigerant Charge: Manual Type”.
5) Remove condenser cooling fan referring to “Condenser Cooling Fan Removal and Installation: Manual Type”.
6) Remove compressor drive belt referring to “Compressor Drive Belt Removal and Installation: Manual Type”.
7) Remove right side engine under cover.
8) Disconnect magnet clutch lead wire coupler (1).
9) Disconnect discharge hose (2) and suction hose (3) from compressor (4).

NOTE

Cap open fittings immediately to keep moisture out of the system.

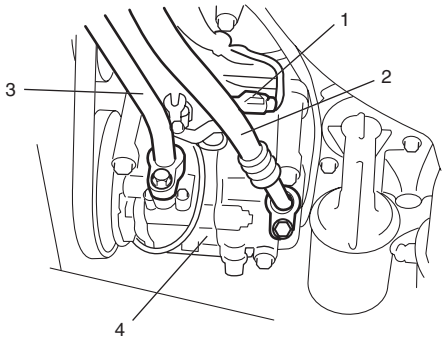

I7RW01721021-01

10) Remove compressor mounting bolts (1), and then remove compressor (2) from its bracket.

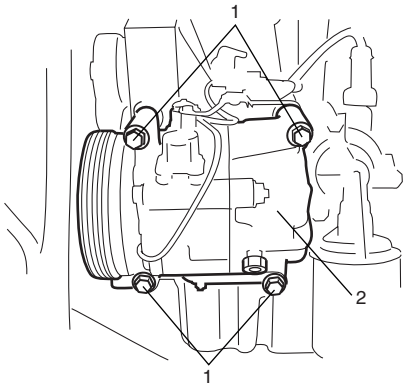

I7RW01721022-01

Installation

Reverse removal procedure noting the following instructions.

- If compressor is replaced, pour new compressor oil referring to “Replenishing Compressor Oil” in “Operation Procedure for Refrigerant Charge: Manual Type”.
- Tighten compressor mounting bolts to specified torque.

  Tightening torque
  Compressor mounting bolt: 25 N·m (2.5 kgf-m, 18.0 lb-ft)

- Evacuate and charge the A/C system referring to “Evacuation” and “Charge” in “Operation Procedure for Refrigerant Charge: Manual Type”.
- Adjust drive belt tension referring to “Compressor Drive Belt Inspection and Adjustment: Manual Type”.

Compressor Assembly Components

S7RW0A7216021

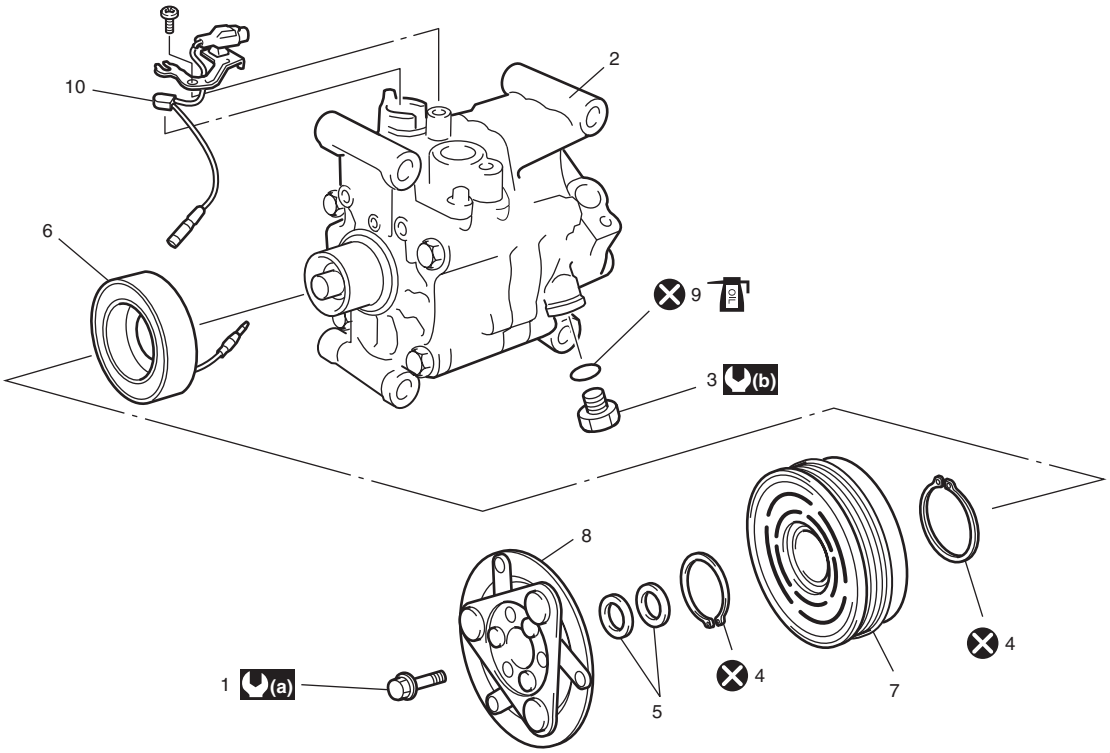

I7RW01721023-01

1. Armature plate bolt	5. Shim	9. O-ring : Apply compressor oil.	: Do not reuse.
2. Compressor	6. Magnet clutch coil	10. Thermal switch	
3. Relief valve	7. Magnet clutch pulley	(a) : 15 N·m (1.5 kgf-m, 11.0 lb-ft)	
4. Circlip	8. Armature plate	(b) : 8 N·m (0.8 kgf-m, 6.0 lb-ft)	

Magnet Clutch Inspection

S7RW0A7216022

- Check armature plate and magnet clutch pulley for wear and oil soak respectively.
- Check magnet clutch pulley bearing for noise, wear and grease leakage.
- Measure magnet clutch coil for resistance at 20 °C (68 °F). If the measured resistance is out of specification, replace magnet clutch assembly.

<u>Magnet clutch coil resistance</u>
Standard: 3.5 – 4.0 Ω

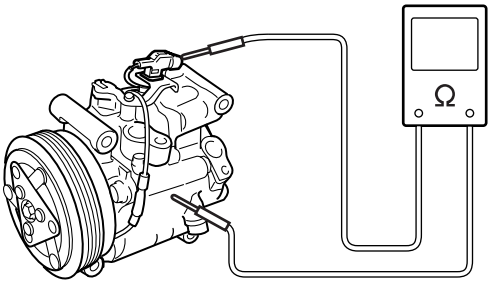

I4RS0A720038-01

Magnet Clutch Removal and Installation

S7RW0A7216023

Removal

1) Remove compressor from vehicle referring to “Compressor Assembly Removal and Installation: Manual Type”.
2) Fix armature plate (1) with special tool and remove armature plate bolt (2).

   Special tool
   (A): 09991–06310

3) Remove armature plate (1).

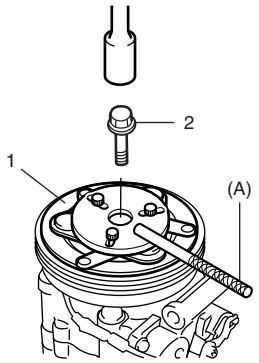

I4RS0A720039-01

4) Remove shims from shaft.
5) Remove circlip (1) using special tool.

   Special tool
   (B): 09900–06107

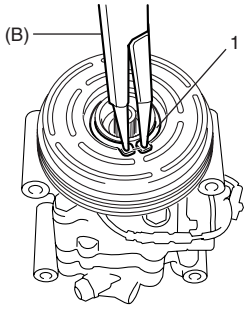

I4RS0A720040-01

6) Remove magnet clutch pulley (2).

NOTE

- **If it is difficult to remove magnet clutch pulley by hand, use puller (1).**
- **Do not damage magnet clutch pulley when using puller.**

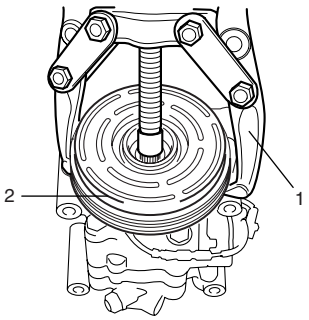

I4RS0A720041-01

7) Remove thermal switch from compressor referring to “Thermal Switch Removal and Installation: Manual Type”.
8) Remove circlip (1) by using special tool.

   Special tool
   (B): 09900–06107

9) Remove magnet clutch coil (2) from compressor (3).

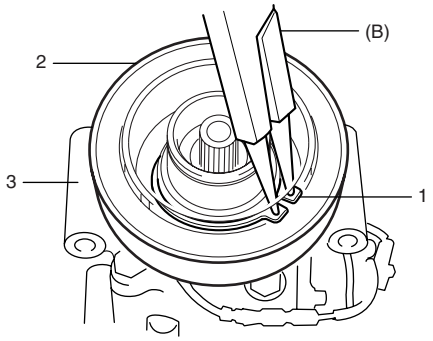

I4RS0A720042-01

Installation

1) Install magnet clutch coil (2) fitting protrusion (4) of magnet clutch coil onto hole (5) of compressor (3).
2) Install circlip (1) directing chamfer side (6) downward.

   Special tool
   (B): 09900–06107

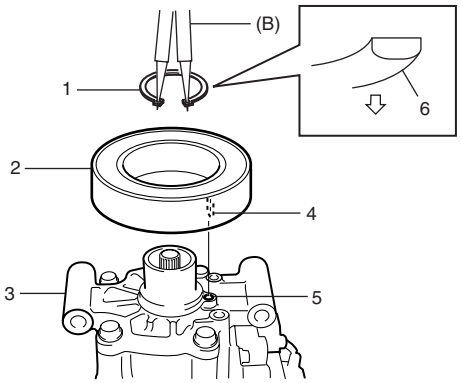

I4RS0A720043-01

3) Install thermal switch to compressor referring to “Thermal Switch Removal and Installation: Manual Type”.
4) Install magnet clutch pulley (1).
5) Install new circlip (2) directing chamfer side (3) upward.

   Special tool
   (B): 09900–06107

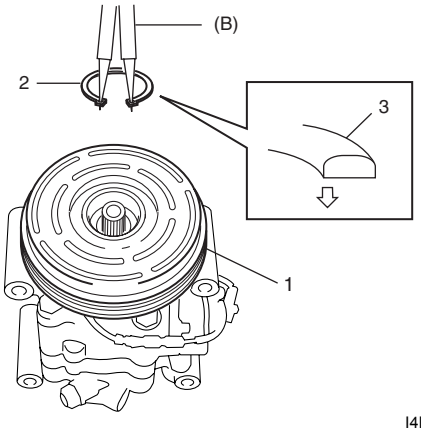

I4RS0A720044-01

6) Tighten new armature plate bolt to specified torque.

   Tightening torque
   Armature plate nut (a): 16 N·m (1.6 kgf-m, 11.5 lb-ft)

   Special tool
   (A): 09991–06310

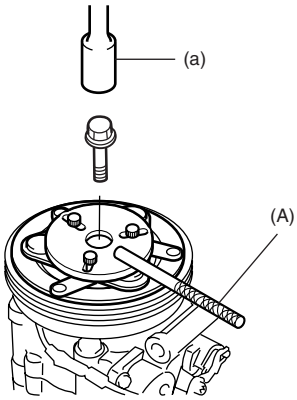

I4RS0A720045-01

7) Adjust clearance between armature plate (1) and magnet clutch pulley by putting shim(s) on compressor shaft. To measure the clearance, perform the following steps.
   a) Put compressor in a vise (2).
   b) Set dial gauge (3) on armature plate, and then adjust its pointer at 0.
   c) Connect battery positive terminal (+) to magnet clutch coil lead wire.
   d) Connect battery negative terminal (–) to compressor body assembly. (At this point, armature plate and magnet clutch pulley are kept in contact.)
   e) Disconnect battery negative terminal (–) to compressor body assembly. (At this point, armature plate and magnet clutch pulley are not in contact.)
   f) Read stroke of armature plate from dial gauge by performing step d) and e) repeatedly. (Stroke of armature plate is clearance between armature plate and magnet clutch pulley.)

   <u>Standard clearance between armature plate and magnet clutch pulley:</u>
   0.3 – 0.5 mm (0.012 – 0.020 in.)

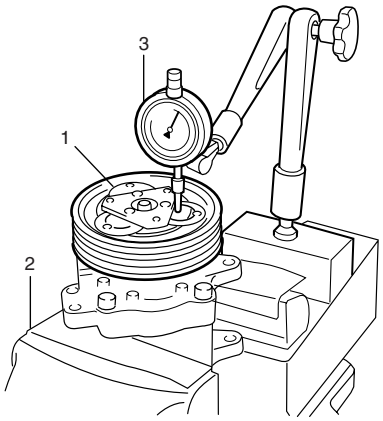

I4RS0A720046-01

Thermal Switch Inspection

S7RW0A7216024

Measured thermal switch for resistance at 20 °C (68 °F)

Thermal switch resistance
Standard: 50 mΩ (DC 16 V, 5A at 20 °C (68 °F))

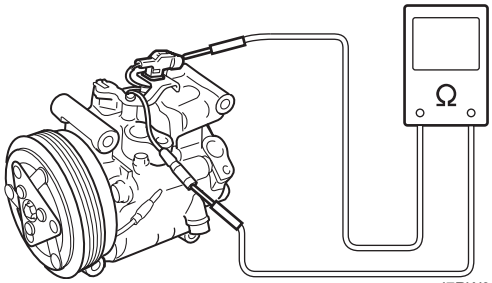

I7RW01721024-01

Thermal Switch Removal and Installation

S7RW0A7216025

Removal

1) Remove compressor from engine referring to “Compressor Assembly Removal and Installation: Manual Type”.
2) Disconnect thermal switch connector.
3) Remove magnet clutch lead wire clamp.
4) Remove thermal switch (1) from compressor using flat head (2).

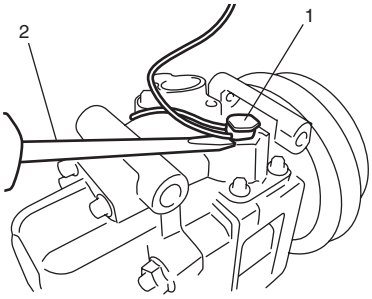

I5RS0C721011-01

Installation

Reverse removal procedure noting the following instructions.

- Apply silicon sealant to contact face (2) of thermal switch (1).

  “A”: Silicon sealant 99000–34220 (SUZUKI SILICON SEALANT KE-347W (100g))

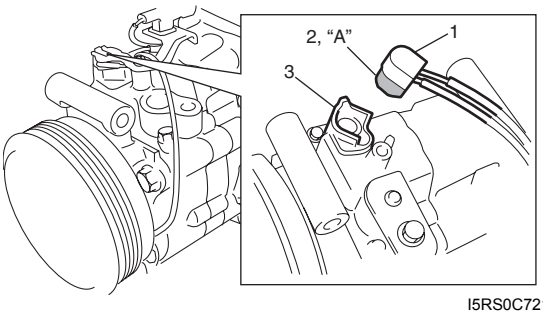

I5RS0C721012-02

- Install compressor to vehicle referring to “Compressor Assembly Removal and Installation: Manual Type”.
- Evacuate and charge the A/C system referring to “Evacuation” and “Charge” in “Operation Procedure for Refrigerant Charge: Manual Type”.

Relief Valve Inspection

S7RW0A7216026

By using special tool, check is there is refrigerant leakage.
If there is refrigerant leakage, replace the relief valve.

Special tool
(A) : 09990–86012

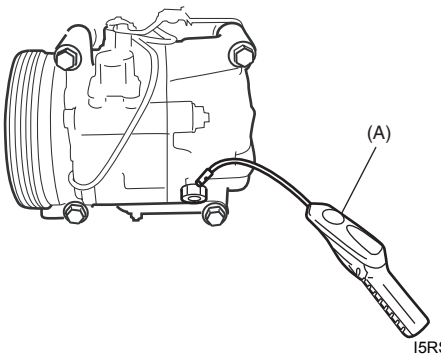

I5RS0C721014-01

Relief valve Removal and Installation

S7RW0A7216027

Removal

1) Recover refrigerant from the A/C system with recovery and recycling equipment referring to “Recovery” in “Operation Procedure for Refrigerant Charge: Manual Type”.
2) Remove right side engine under cover.
3) Remove relief valve (1) from compressor (2).

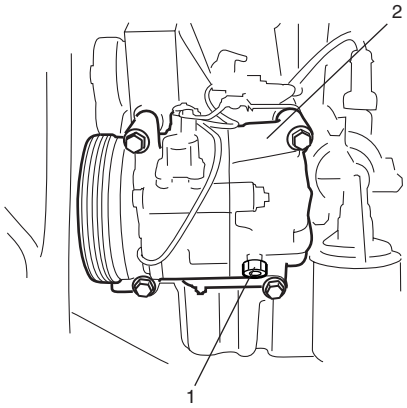

I4RS0A720048-01

Installation

Reverse removal procedure noting the following instructions.

- Use new O-ring
- Apply compressor oil to O-ring.
- Tighten relief valve to the specified torque.

  Tightening torque
  Relief valve (a): 8 N·m (0.8 kgf-m, 6.0 lb-ft)

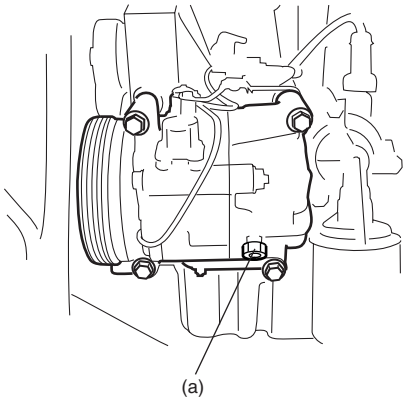

I4RS0A720049-01

- Evacuate and charge the A/C system referring to “Evacuation” and “Charge” in “Operation Procedure for Refrigerant Charge: Manual Type”.

Specifications

Tightening Torque Specifications

S7RW0A7217001

Fastening part	Tightening torque			Note
	N·m	kgf-m	lb-ft	
Expansion valve bolt	4.5	0.45	3.5	☞
A/C refrigerant pressure sensor	11	1.1	8.0	☞
Compressor mounting bolt	25	2.5	18.0	☞
Armature plate nut	16	1.6	11.5	☞
Relief valve	8	0.8	6.0	☞

NOTE

The specified tightening torque is also described in the following.
“A/C System Major Components Location: Manual Type”
“Compressor Assembly Components: Manual Type”

Reference:

For the tightening torque of fastener not specified in this section, refer to “Fasteners Information in Section 0A”.

Special Tools and Equipment

Recommended Service Material

S7RW0A7218001

Material	SUZUKI recommended product or Specification		Note
Compressor oil	MATSUSHITADENKI GU10	P/No.: 99000–99015–00A	☞
Silicon sealant	SUZUKI SILICON SEALANT KE-347W (100g)	P/No.: 99000–34220	☞

NOTE

Required service material is also described in the following.
“HVAC Unit Components: Manual Type”
“Compressor Assembly Components: Manual Type”

Special Tool

S7RW0A7218002

09900–06107 Snap ring pliers (opening type) ☞ / ☞ / ☞ / ☞ / ☞ 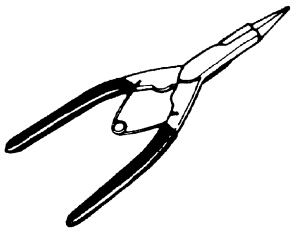	09990–06020 Manifold gauge set (R134a) 1.Manifold gauge 2.Charging hoses 3.Quick connector 4.Refrigerant container tap valve 5.Refrigerant container T joint 6.Packing sets 7.Case☞ 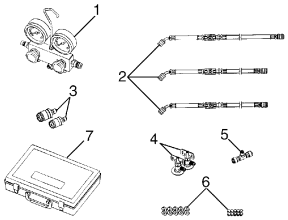
09990–86012 Gas leak detector This kit includes following items. 1. Gas leak detector, 2. Instruction manual, 3. Filter, 4. Sensor, 5. Dri-sell battery (size D)☞ / ☞ 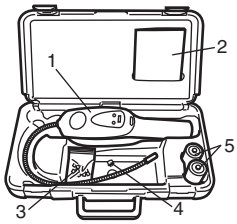	09991–06310 Armature plate holder ☞ / ☞ 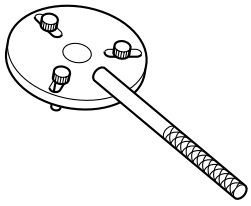

Automatic Type

Precautions

A/C System Caution

S7RW0A7220001

Refer to “A/C System Caution: Manual Type”.

Precautions in Diagnosing Trouble

S7RW0A7220002

- Do not disconnect couplers from HVAC control module, battery cable from battery, HVAC control module ground wire harness from body or main fuse before confirming diagnostic information (diagnostic trouble code) stored in HVAC control module memory.
- Diagnostic information (diagnostic trouble code) stored in HVAC control module can be checked by display of HVAC control module. Also, it can be checked by using SUZUKI scan tool. Before checking diagnostic information (diagnostic trouble code), read this manual and operator's manual for SUZUKI scan tool to know how to read diagnostic information (diagnostic trouble code).
- When trouble is diagnosed using diagnostic information (diagnostic trouble code) on display of HVAC control module, keep in your mind that each diagnostic information (diagnostic trouble code) has priority, and only diagnostic information (diagnostic trouble code) which has the highest priority is indicated. Therefore, after troubleshooting the malfunction, make sure if there exists any other diagnostic information (diagnostic trouble code).
- Be sure to read “Air Bag Warning in Section 00” before inspection.

Precautions on Servicing A/C System

S7RW0A7220003

Refer to “Precautions on Servicing A/C System: Manual Type”.

General Description

Auto A/C System Description

S7RW0A7221001

The automatic type air conditioning system (auto A/C) is provided with the function to automatically control the inside air temperature, fan speed, air flow outlet direction and air intake position by HVAC control module in addition to functions of the manual type air conditioning system (manual A/C). Once the inside air temperature is set using the temperature selector, HVAC control module automatically controls the inside air temperature at the constant level at all times based on the inside air temperature, outside air temperature, amount of sunlight and engine coolant temperature detected respectively by the inside air temperature sensor, outside air temperature sensor, sunload sensor and ECT sensor. For the electronic control system components location, refer to “Electronic Control System Components Location: Manual Type”. For the A/C system components location, refer to “A/C System Major Components Location: Automatic Type”.
For the A/C electrical control input / output diagram, refer to “Auto A/C Electronic Control Input / Output Diagram: Automatic Type”.

HVAC Control Description

S7RW0A7221002

Temperature Control

HVAC control module calculates the target temperature control door position based on signals from the temperature selector, inside air temperature sensor, outside air temperature sensor and sunload sensor and controls the temperature control actuator so that the current position of the temperature control door matches its target position.

Fan Speed Control

HVAC control module calculates the target blower fan speed based on signals from the temperature selector, inside air temperature sensor, outside air temperature sensor, ECT sensor and sunload sensor, compares it with the current blower fan speed inputted from the blower motor controller to control the current blower fan speed to the target level.

Air Flow Outlet Control

HVAC control module calculates the target temperature control door position based on signals from the temperature selector, inside air temperature sensor, outside air temperature sensor, ECT sensor and sunload sensor. Using thus obtained target temperature control door position, it further calculates the target air flow control door position and controls the air flow control actuator so that the current air flow control door position becomes the target position.

Air Intake Position Control

HVAC control module determines the position of the air intake control door based on signals from the temperature selector, inside air temperature sensor, outside air temperature sensor and sunload sensor and selects any of the following positions by controlling the position of the air intake control door.

- FRESH position (FRE)
- RECIRCULATION position (REC)
- MIX position (MIX)

A/C Compressor Relay Control

HVAC control module outputs A/C switch ON signal to ECM via BCM when the vehicle state satisfy conditions described below.

- A/C switch is ON
- Evaporator temperature is higher than specified value
- Evaporator temperature sensor malfunction is not detected

Communication of ECM and BCM is established by CAN (Controller Area Network). (For more detail of CAN communication, refer to “CAN Communication System Description in Section 1A”).

ECM turns ON the A/C compressor relay when the vehicle state satisfy conditions described below.

- A/C switch ON signal is inputted
- A/C refrigerant pressure is within specified range
- Engine speed is within specified range
- Engine coolant temperature is lower than specified value
- Throttle opening is lower than specified value
- Vehicle is not in either state of starting or quick acceleration
- ECT sensor malfunction is not detected
- A/C refrigerant pressure sensor malfunction is not detected

Condenser Cooling Fan Relay Control

ECM turn ON the condenser cooling fan relay at the same time when ECM turn ON the A/C compressor relay.

Sub-Cool A/C System Description

S7RW0A7221003

Refer to “Sub-Cool A/C System Description: Manual Type”.

On-Board Diagnostic System Description

S7RW0A7221004

NOTE

The diagnostic information as diagnostic trouble code (DTC) can be known by using SUZUKI scan tool. For further details, refer to "DTC Check: Automatic Type".

HVAC control module detects malfunctions, which may occur in the following area.

- Inside air temperature sensor
- Evaporator temperature sensor
- Sunload sensor
- Temperature control actuator
- Air flow control actuator
- Temperature selector of HVAC control module
- Air flow selector of HVAC control module
- Blower speed selector of HVAC control module
- Back-up power supply circuit of HVAC control module
- Serial communication line between BCM and HVAC control module
- Received data from BCM as follows
  - Outside air temperature sensor signal
  - ECT sensor signal
  - A/C refrigerant pressure sensor signal
  - VSS signal
  - Engine type signal
  - Combination meter spec signal
  - CAN communication circuit failure signal

When HVAC control module detects malfunction, the "A/C" indicator light (1) flashes to warn and the diagnostic trouble code (DTC) is stored in the memory of the module. When diagnosing trouble, the DTC can be checked according to "DTC Check: Automatic Type".

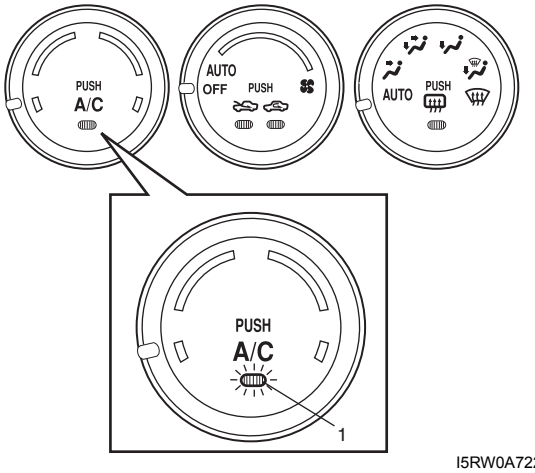

I5RW0A722002-01

Schematic and Routing Diagram

A/C System Air Flow Diagram

S7RW0A7222001

Refer to "A/C System Air Flow Diagram: Manual Type".

A/C System Wiring Diagram

S7RW0A7222002

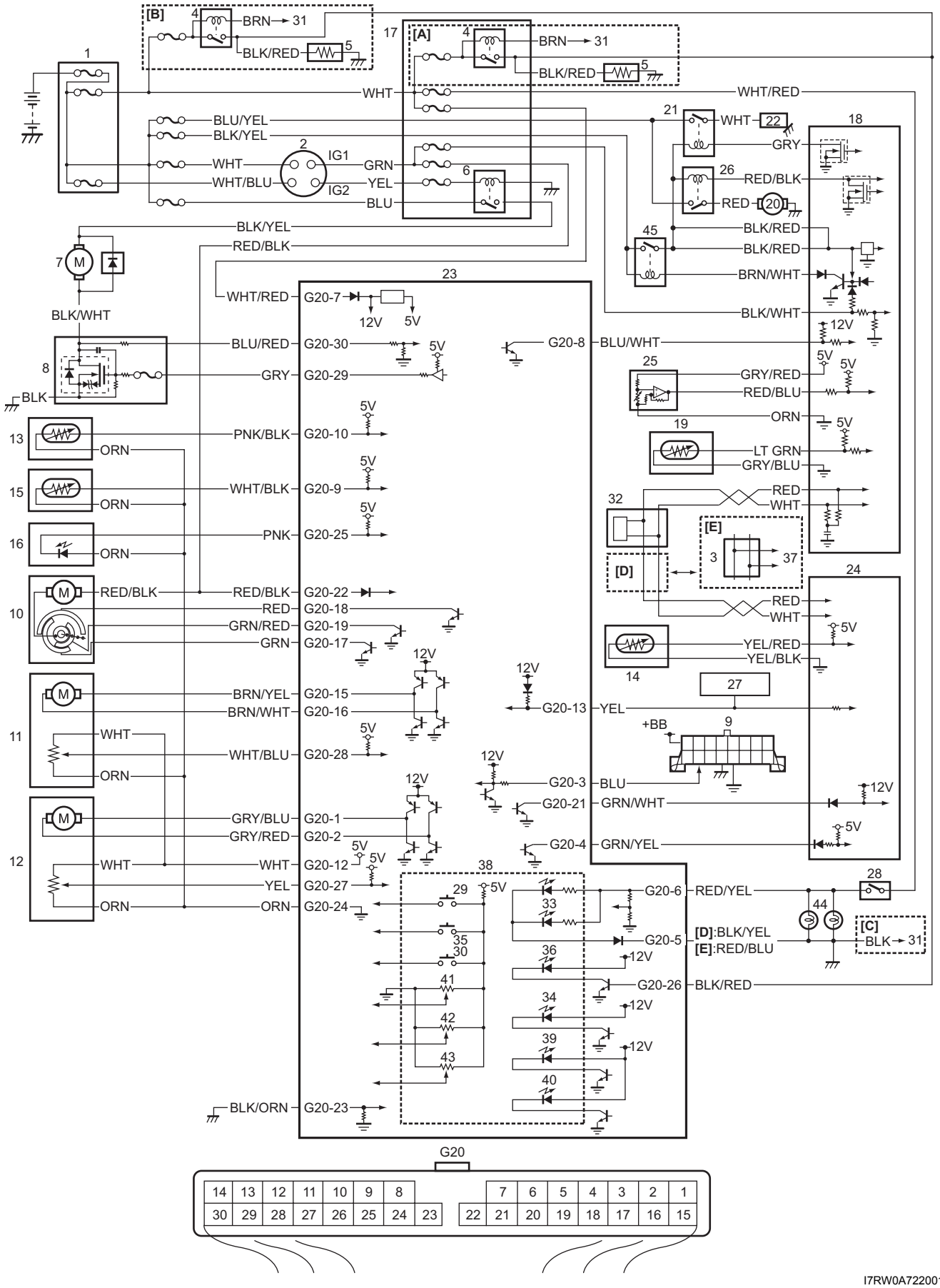

I7RW0A722001-01

[A]: Hatchback model	9. DLC	22. Compressor	35. Rear defogger switch
[B]: Sedan model	10. Air intake actuator	23. HVAC control module	36. Rear defogger indicator
[C]: Illumination control model	11. Air flow control actuator	24. BCM	37. To other control module
[D]: Junction block with BCM	12. Temperature control actuator	25. A/C refrigerant pressure sensor	38. Indicator light, switch, selector
[E]: Junction block without BCM	13. Inside air temperature sensor	26. Condenser cooling fan relay	39. “FRE” indicator light
1. Main fuse box	14. Outside air temperature sensor	27. Information display	40. “REC” indicator light
2. Ignition switch	15. Evaporator temperature sensor	28. Lighting switch	41. Temperature selector
3. CAN junction connector	16. Sunload sensor	29. A/C switch	42. Blower speed selector
4. Rear defogger relay	17. Junction block assembly	30. Air intake selector	43. MODE (air flow) selector
5. Rear defogger	18. ECM	31. To BCM	44. Tail light
6. Blower motor relay	19. ECT sensor	32. ABS / ESP® control module	45. Main relay
7. Blower motor	20. Condenser cooling fan motor	33. Illumination light	
8. Blower motor controller	21. Compressor relay	34. “A/C” indicator light	

Auto A/C Electronic Control Input / Output Diagram

S7RW0A7222003

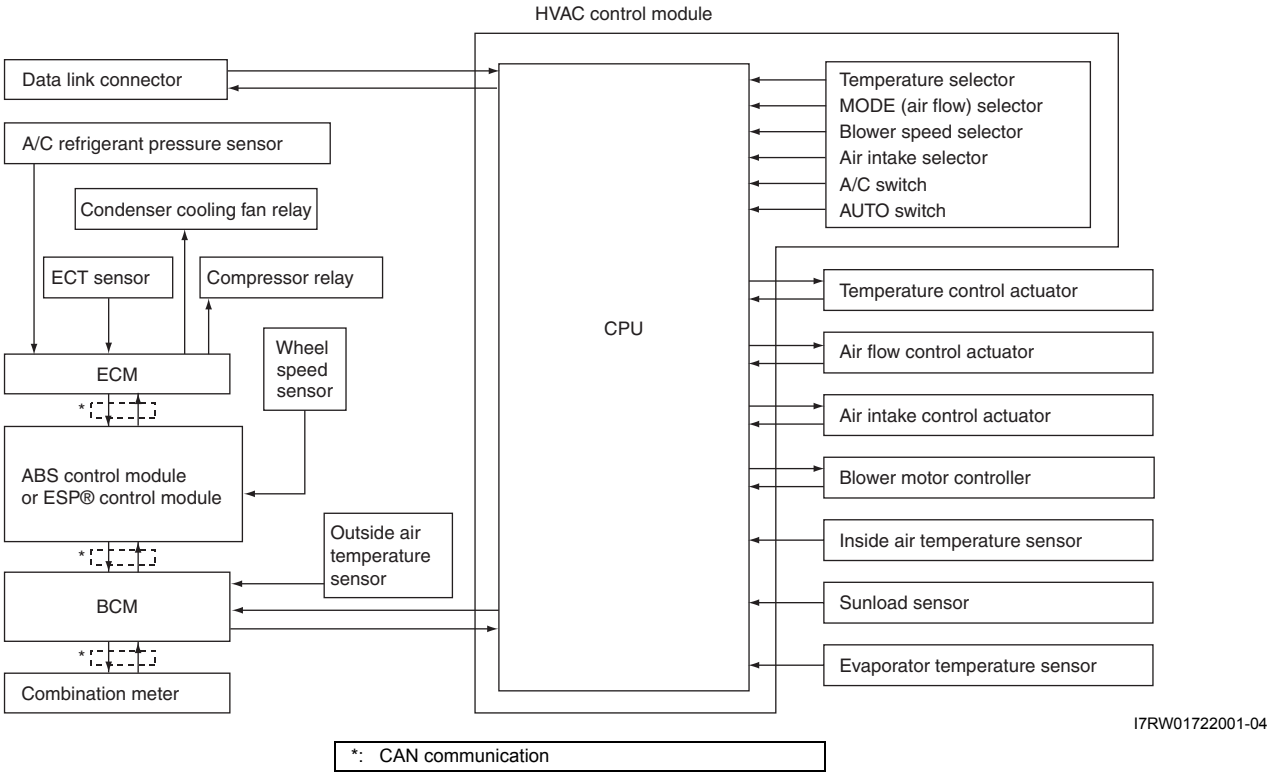

I7RW01722001-04

Component Location

A/C System Major Components Location

S7RW0A7223001

Refer to “A/C System Major Components Location: Manual Type”.

Electronic Control System Components Location

S7RW0A7223002

NOTE

The figure shows left-hand steering vehicle. For right-hand steering vehicle, parts with (*) are installed at the opposite side.

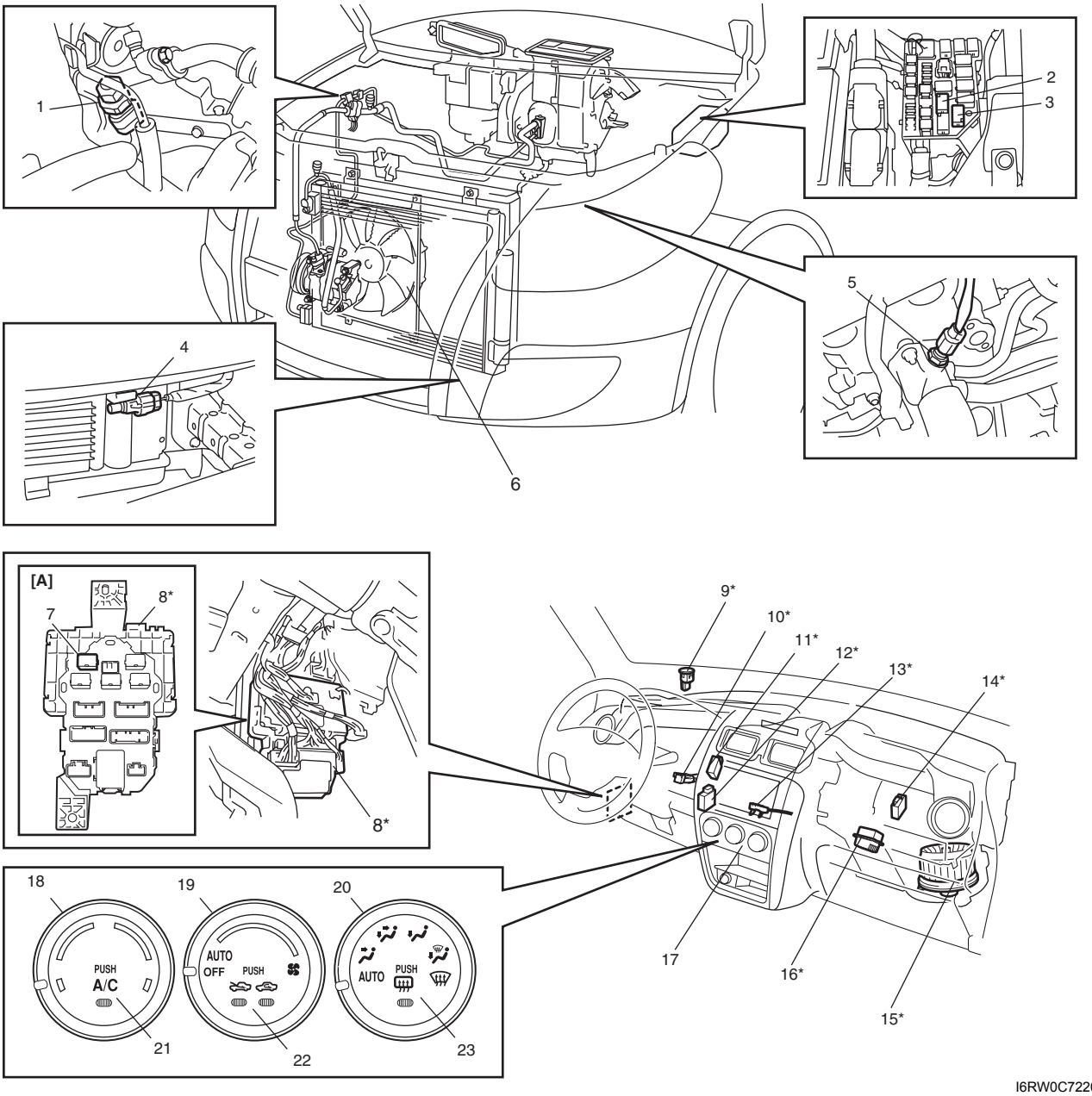

I6RW0C722003-01

[A]: Junction block assembly viewed from relay side	8. Junction block assembly	16. Blower motor controller
1. A/C refrigerant pressure sensor	9. Sunload sensor	17. HVAC control module
2. Compressor relay	10. Inside air temperature sensor	18. Temperature selector
3. Condenser cooling fan relay	11. Air flow control actuator	19. Blower speed selector
4. Outside air temperature sensor	12. Temperature control actuator	20. MODE (air flow) selector
5. ECT sensor	13. Evaporator temperature sensor	21. A/C switch
6. Condenser cooling fan	14. Air intake actuator	22. Air intake selector
7. Blower motor relay	15. Blower motor	23. Rear defogger switch

Diagnostic Information and Procedures

Air Conditioning System Check

S7RW0A7224001

Step	Action	Yes	No
1	**Customer complaint analysis** 1) Perform ☞"Customer complaint analysis". *Was customer complaint analysis performed?*	Go to Step 2.	Perform customer complaint analysis.
2	**Visual inspection** 1) Perform ☞ "Visual inspection". *Is there any faulty condition?*	Repair or replace malfunction part.	Go to Step 3.
3	**DTC check** 1) Perform ☞ "DTC check". *Is there any DTC code?*	Go to Step 4.	Go to Step 5.
4	**DTC troubleshooting** 1) Perform ☞ "DTC Troubleshooting". *Is there any faulty condition?*	Repair or replace malfunction part, and go to Step 7.	Go to Step 5.
5	**A/C system performance inspection** 1) Perform ☞ "A/C system performance inspection". *Is there any faulty condition?*	Repair or replace malfunction part, and go to Step 8.	Go to Step 6.
6	**Perform A/C system symptom diagnosis** 1) Inspect and repair referring to "A/C System Symptom Diagnosis: Automatic Type". *Is there any faulty condition?*	Repair or replace malfunction part, and go to Step 7.	Go to Step 8.
7	**Check for intermittent problem** 1) Check for intermittent troubles referring to "Intermittent and Poor Connection Inspection in Section 00". *Is there any faulty condition?*	Repair or replace malfunction part, and go to Step 8.	Go to Step 8.
8	**Final confirmation test** 1) Perform ☞ "Final confirmation test". *Is there any malfunction code?*	Go to Step 4.	End.

Description for Each Step

Step 1. Customer complaint analysis

Talk to customer, and then record details of the problem.

Customer questionnaire (Example)

Customer's Name:	Model:	VIN:	
Date of Issue:	Date of Reg:	Date of Problem:	Mileage:

Problem Symptoms	● A/C switch indicator lamp abnormal: fails to turn on/fails to turn off/flashes ● Abnormal noise while A/C compressor is working: from compressor/ from condenser fan motor other_____ ● Chattering from A/C compressor: ● Condenser fan motor does not work: ● A/C compressor does not work: ● Other:
Frequency of Occurrence	● Continuous/Intermittent (times a day, a month)/ other_____
Conditions for Occurrence of Problem	● Vehicle at stop & A/C compressor is working: ● For some time after A/C switch is ON: ● When outside air temperature is high: ● When outside air temperature is low: ● All the time:
Environmental Condition	● Weather: fair/cloudy/rain/snow/other_____ ● Temperature: °F (°C)
Diagnostic Trouble Code	● First check: Normal code/malfunctional code ( ) ● Second check after test drive: Normal code/malfunctional code ( )

I4RH01722014-01

NOTE

The form is a standard sample. It should be modified according to conditions characteristic of each market.

Step 2. Visual inspection
As a preliminary step, be sure to perform visual check of the items that support proper function of the air conditioning system referring to "Visual Inspection: Automatic Type".

Step 3. DTC check
Check DTC referring to "DTC Check: Automatic Type".

Step 4. DTC troubleshooting
Based on the DTC, perform an applicable DTC diagnostic flow and locate the cause of the trouble, namely in a sensor, wire harness, connector, actuator, HVAC control module or other part and repair faulty parts.

Step 5. A/C system performance inspection
Inspect A/C system suspected to be a possible cause referring to "A/C System Performance Inspection: Manual Type".

Step 6. A/C system symptom diagnosis
Check any part or system suspected to be a possible cause referring to "A/C System Symptom Diagnosis: Automatic Type".

Step 7. Check for intermittent problem
Check any part where an intermittent trouble is easy to occur (e.g., wire harness, connector, etc.), referring to "Intermittent and Poor Connection Inspection in Section 00" and related circuit of trouble cord recorded.

Step 8. Final confirmation test
Confirm if the problem symptom is troubleshoot and the A/C system is free from any abnormal conditions. If there existed DTC, clear the DTC. Then, check if the DTC is still detected and if there is any other DTC.

A/C System Symptom Diagnosis

S7RW0A7224002

Condition	Possible cause	Correction / Reference Item
No cool air comes out (A/C system does not operate)	No refrigerant	*Perform recovery, evacuation and charge referring to "Operation Procedure for Refrigerant Charge: Manual Type".*
	Fuse blown	*Check related fuses, and then check for short circuit to ground.*
	A/C switch faulty	*Check A/C switch referring to "Inspection of HVAC Control Module and Its Circuit: Automatic Type".*
	Evaporator temperature sensor faulty	*Check evaporator temperature sensor referring to "Evaporator Temperature Sensor Inspection: Manual Type".*
	A/C refrigerant pressure sensor faulty	*Check A/C refrigerant pressure sensor referring to "A/C Refrigerant Pressure Sensor and Its Circuit Inspection: Manual Type".*
	Wiring or grounding faulty	*Repair as necessary.*
	ECM faulty	*Check ECM referring to "A/C System Inspection at ECM: Automatic Type".*
	HVAC control module faulty	*Check HVAC control module referring to "Inspection of HVAC Control Module and Its Circuit: Automatic Type".*
	Magnet clutch faulty	*Check magnet clutch referring to "Magnet Clutch Inspection: Manual Type".*
	Compressor drive belt loosened or broken	*Adjust or replace drive belt.*
	Compressor faulty	*Check compressor.*
	Compressor relay faulty	*Check compressor relay referring to "A/C System Relay Inspection: Manual Type".*
	BCM faulty	*Check BCM referring to "Inspection of BCM and Its Circuits in Section 10B".*
No cool air comes out (radiator cooling fan motor does not operate)	Fuse blown	*Check related fuses, and then check for short circuit to ground.*
	Wiring or grounding faulty	*Repair as necessary.*
	Condenser cooling fan motor relay faulty	*Check condenser cooling fan motor relay referring to "A/C System Relay Inspection: Manual Type".*
	Condenser cooling fan motor faulty	*Check condenser cooling fan motor referring to "Condenser Cooling Fan Inspection: Manual Type".*
	ECM faulty	*Check ECM referring to "A/C System Inspection at ECM: Automatic Type".*
	HVAC control module faulty	*Check HVAC control module referring to "Inspection of HVAC Control Module and Its Circuit: Automatic Type".*
No cool air comes out (blower motor does not operate)	Fuse blown	*Check related fuses, and then check for short circuit to ground.*
	Blower motor controller faulty	*Check blower motor controller referring to "Blower Motor Controller Inspection: Automatic Type".*
	HVAC control module faulty	*Check HVAC control module referring to "Inspection of HVAC Control Module and Its Circuit: Automatic Type".*
	Wiring or grounding faulty	*Repair as necessary.*
	Blower motor faulty	*Check blower motor referring to "Blower Motor Inspection in Section 7A".*
	Blower motor relay faulty	*Check blower motor relay referring to "Blower Motor Relay Inspection in Section 7A".*

Condition	Possible cause	Correction / Reference Item
Cool air does not come out or insufficient cooling (A/C compressor normal operation)	Insufficient or excessive charge of refrigerant	*Check the amount of refrigerant and system for leaks.*
	Condenser clogged	*Check condenser referring to "Condenser Assembly On-Vehicle Inspection: Manual Type".*
	A/C evaporator clogged or frosted	*Check A/C evaporator and evaporator temperature sensor referring to "Evaporator Inspection: Manual Type" and "Evaporator Temperature Sensor Inspection: Manual Type".*
	Evaporator temperature sensor faulty	*Check evaporator temperature sensor referring to "Evaporator Temperature Sensor Inspection: Manual Type".*
	Expansion valve faulty	*Check expansion valve referring to "Expansion Valve Inspection: Manual Type".*
	Desiccant clogged	*Check desiccant and cap with filter.*
	Compressor drive belt loosened or broken	*Adjust or replace drive belt.*
	Magnet clutch faulty	*Check magnet clutch referring to "Magnet Clutch Inspection: Manual Type".*
	Compressor faulty	*Check compressor.*
	Air in A/C system	*Replace condenser, and then perform evacuation and charge referring to "Operation Procedure for Refrigerant Charge: Manual Type".*
	Air leaking from HVAC unit or air duct	*Repair as necessary.*
	Heater and ventilation system faulty	*Check HVAC unit.*
	HVAC control module faulty	*Check HVAC control module referring to "Inspection of HVAC Control Module and Its Circuit: Automatic Type".*
	Temperature control actuator faulty	*Check temperature control actuator referring to "Temperature Control Actuator and Its Circuit Inspection: Automatic Type".*
	Blower motor faulty	*Check blower motor referring to "Blower Motor Inspection in Section 7A".*
	Excessive compressor oil in A/C system	*Drain excessive compressor oil from A/C system circuit and compressor.*
Cool air does not come out only intermittently	Wiring connection faulty	*Repair as necessary.*
	Expansion valve faulty	*Check expansion valve referring to "Expansion Valve Inspection: Manual Type".*
	Excessive moisture in A/C system	*Replace condenser, and then perform evacuation and charge referring to "Operation Procedure for Refrigerant Charge: Manual Type".*
	Magnet clutch faulty	*Check magnet clutch referring to "Magnet Clutch Inspection: Manual Type".*
	Excessive amount of refrigerant	*Check the amount of refrigerant.*
Cool air comes out only at high speed	Condenser clogged	*Check condenser referring to "Condenser Assembly On-Vehicle Inspection: Manual Type".*
	Insufficient charge of refrigerant	*Check the amount of refrigerant and system for leaks.*
	Air in A/C system	*Replace condenser, and then perform evacuation and charge referring to "Operation Procedure for Refrigerant Charge: Manual Type".*
	Compressor drive belt loosened or broken	*Adjust or replace drive belt.*
	Compressor faulty	*Check compressor.*

Condition	Possible cause	Correction / Reference Item
Cool air does not come out only at high speed	Excessive amount of refrigerant	*Check the amount of refrigerant.*
	A/C evaporator frosted	*Check A/C evaporator and evaporator temperature sensor referring to "Evaporator Inspection: Manual Type" and "Evaporator Temperature Sensor Inspection: Manual Type".*
Insufficient air flow of cooled air	A/C evaporator clogged or frosted	*Check A/C evaporator and evaporator temperature sensor referring to "Evaporator Inspection: Manual Type" and "Evaporator Temperature Sensor Inspection: Manual Type".*
	Air leaking from HVAC unit or air duct	*Repair as necessary.*
	Blower motor faulty	*Check blower motor referring to "Blower Motor Inspection in Section 7A".*
	Wiring or grounding faulty	*Repair as necessary.*

Abnormal Noise Symptom Diagnosis of A/C System

S7RW0A7224003

Refer to "Abnormal Noise Symptom Diagnosis of A/C System: Manual Type".

DTC Check

S7RW0A7224004

Using SUZUKI Scan Tool

1) Turn ignition switch to OFF position.
2) Connect SUZUKI scan tool to data link connector (DLC) (1) located on underside of instrument panel at driver's seat side.

   Special tool
   (A): SUZUKI scan tool

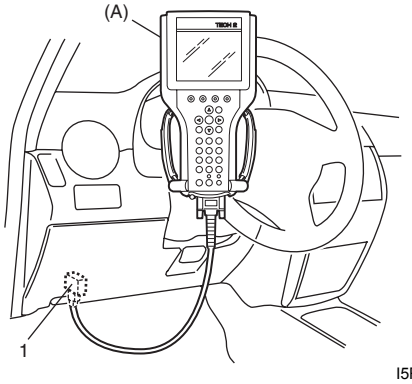

I5RW0A722004-01

3) Light over sunload sensor vertically with an incandescent light of approximately 100 W apart from about 100 mm (3.94 in.).

   NOTE

   If sunload sensor is not lighted over with an incandescent light, DTC B1504 is detected even though there is not any malfunction.

4) Turn ignition switch to ON position.
5) Read DTC displayed on SUZUKI scan tool.

   NOTE

   To know how to use SUZUKI scan tool, refer to operator's manual for SUZUKI scan tool.

6) After completing the check, turn ignition switch to OFF position and disconnect SUZUKI scan tool from data link connector (DLC).

Not Using SUZUKI Scan Tool

NOTE

In case of malfunction of temperature selector, blower speed selector and air flow selector, DTC can not be checked by the following procedure. Use SUZUKI scan tool for DTC check.

1) Light over sunload sensor vertically with an incandescent light of approximately 100 W apart from about 100 mm (3.94 in.).

   NOTE

   If sunload sensor is not lighted over with an incandescent light, DTC of sunload sensor is detected as current DTC even though there is not any malfunction.

2) Set the following selectors to specified positions below respectively with ignition switch off position.
   - Temperature selector (1) is maximum cool position
   - Blower speed selector (2) is OFF position
   - Air flow selector (3) is AUTO position
3) While pressing A/C switch (4) and air intake selector (5) simultaneously, turn ignition switch to ON position.
4) Wait for about 5 seconds (start of diagnosis).
5) Read flashing pattern of "FRE" (6) and "REC" (7) indicator lights which represents DTC and write it down.

NOTE

- **When 2 or more current DTCs are detected, only DTC having the highest priority is indicated. Therefore, after troubleshooting the malfunction, DTC check has to be performed again to see if any other DTC(s) is detected.**
- **Pressing "A/C" switch alternates display of current DTC and history DTC. "A/C" indicator light (8) remains off when display is in current DTC mode and it lights up when display is in history DTC mode.**
- **When a history DTC is indicated while 2 or more history DTCs are detected, it is possible to have other history DTC(s) stored in HVAC control module displayed by pressing the air intake selector.**

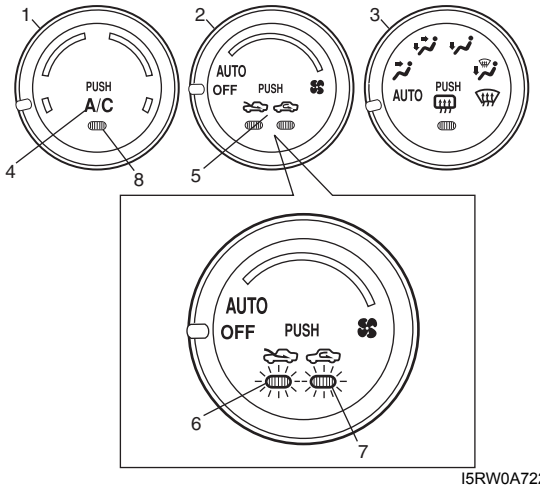

I5RW0A722005-01

Example: When inside air temperature sensor circuit malfunction (Open) is set

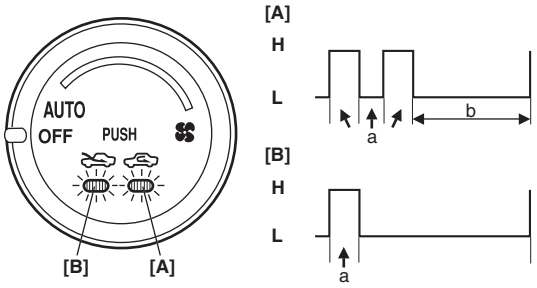

I5RW0A722006-02

[A]: "REC" indicator light	L: OFF
[B]: "FRE" indicator light	a. About 0.5 seconds
H: ON	b. About 2 seconds

Example: When VSS signal failure (Data error) is set

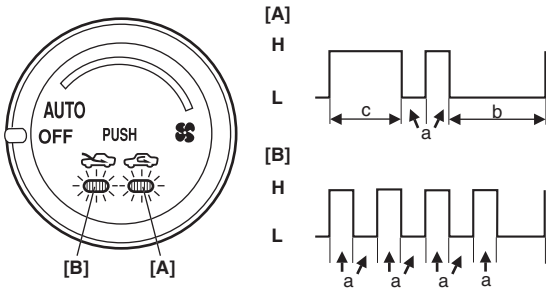

I5RW0A722025-01

[A]: "REC" indicator light	a. About 0.5 seconds
[B]: "FRE" indicator light	b. About 3 seconds
H: ON	c. About 1.5 seconds
L: OFF	

6) After completing above check, turn ignition switch to "OFF" position.

DTC Clearance

S7RW0A7224005

Using SUZUKI Scan tool

1) Turn ignition switch to OFF position.
2) Connect SUZUKI scan tool to data link connector (DLC) (1) located on underside of instrument panel at driver's seat side.

Special tool
(A): SUZUKI scan tool

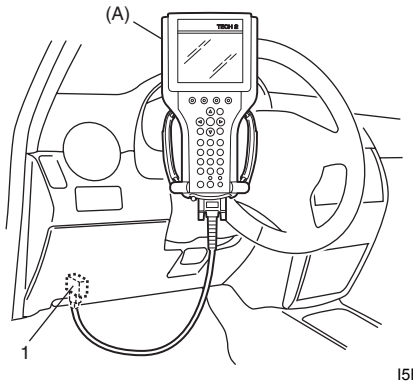

I5RW0A722004-01

3) Turn ignition switch to ON position.
4) Erase DTC according to instructions displayed on SUZUKI scan tool.

NOTE

To know how to use SUZUKI scan tool, refer to operator's manual for SUZUKI scan tool.

5) After completing the clearance, perform "DTC Check" and confirm if normal DTC (No code) is displayed.
6) Turn ignition switch to OFF position, and then disconnect SUZUKI scan tool from DLC.

Not Using SUZUKI Scan Tool

1) Display history DTC by HVAC control module referring to “Not Using SUZUKI Scan Tool” under “DTC Check”.
2) Press air intake selector (1) and “A/C” switch (2) at the same time for 5 seconds or more.

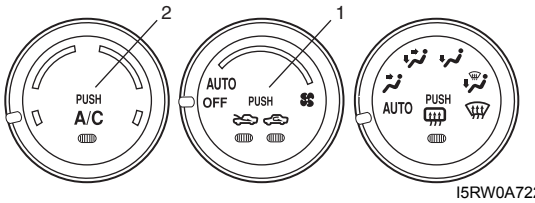

I5RW0A722007-01

3) After completing above Steps, turn ignition switch to OFF position.
4) Perform “DTC Check” and confirm if normal DTC is indicated.

DTC Table

S7RW0A7224006

⚠ CAUTION

Be sure to perform “Air Conditioning System Check: Automatic Type” before starting diagnosis.

NOTE

- **History DTC is such DTC which HVAC control module saves in its memory when it detects current DTC for 60 seconds or more continuously.**
- **DTC B1504, B1541, B1546, B1570 and B1571 are displayed as a current DTC only when a current malfunction is detected.**
- **When HVAC control module detects DTC B1513 and B1514, both current and history DTCs are displayed at the same time.**

DTC No. (displayed on SUZUKI scan tool)	Detection item	DTC (indicated on HVAC control module)		Condition when trouble detected (DTC is determined when following condition detected)	“A/C” indicator light
		Indicated by “REC” indicator light	Indicated by “FRE” indicator light		
☞ B1502	Inside Air Temperature Sensor Circuit Malfunction	2	1	Signal voltage of inside air temperature sensor is higher than specification.	Flashed
		2	2	Signal voltage of inside air temperature sensor is lower than specification.	Flashed
☞ B1503	Evaporator Temperature Sensor Circuit Malfunction	3	1	Signal voltage of evaporator temperature sensor is higher than specification.	Flashed
		3	2	Signal voltage of evaporator temperature sensor is lower than specification.	Flashed
☞ B1504	Sun load Sensor Circuit Malfunction	4	1	• Signal voltage of sun load sensor is higher than specification. • Without sunlight.	—
		4	2	Signal voltage of sun load sensor is lower than specification.	Flashed
☞ B1511	Temperature Control Actuator (Position Sensor) and/or Its Circuit Malfunction	6	1	Signal voltage of position sensor included in temperature control actuator is higher than specification.	Flashed
		6	2	Signal voltage of position sensor included in temperature control actuator is lower than specification.	Flashed
☞ B1512	Air Flow Control Actuator (Position Sensor) and/or Its Circuit Malfunction	7	1	Signal voltage of position sensor included in airflow control actuator is higher than specification.	Flashed
		7	2	Signal voltage of position sensor included in airflow control actuator is lower than specification.	Flashed

DTC No. (displayed on SUZUKI scan tool)	Detection item	DTC (indicated on HVAC control module)		Condition when trouble detected (DTC is determined when following condition detected)	"A/C" indicator light
		Indicated by "REC" indicator light	Indicated by "FRE" indicator light		
☞ B1513	Temperature Control Actuator (Motor) and/or Its Circuit Malfunction	6	3	Motor of temperature control actuator is not operated more than specified time.	Flashed
☞ B1514	Air Flow Control Actuator (Motor) and/or Its Circuit Malfunction	7	3	Motor of air flow control actuator is not operated more than specified time.	Flashed
☞ B1520	Temperature Selector Malfunction	15	1	Signal voltage of temperature selector in HVAC control module is higher than specification.	Flashed
		15	2	Signal voltage of temperature selector in HVAC control module is lower than specification.	Flashed
☞ B1521	Blower Speed Selector Malfunction	16	1	Signal voltage of blower speed selector in HVAC control module is higher than specification.	Flashed
		16	2	Signal voltage of blower speed selector in HVAC control module is lower than specification.	Flashed
☞ B1522	Air Flow Selector Malfunction	17	1	Signal voltage of airflow selector in HVAC control module is higher than specification.	Flashed
		17	2	Signal voltage of airflow selector in HVAC control module is lower than specification.	Flashed
☞ B1541	Back-up Power Supply Circuit Malfunction	14	1	• Back-up power supply voltage of HVAC control module is higher than or lower than specification. • When connect battery with vehicle and then, turn ignition switch to ON position for first time.	—
☞ B1546	A/C Refrigerant Pressure Malfunction	13	5	• Signal voltage of outside air temperature sensor is more than specified value. However, A/C refrigerant pressure is less than specified value. • Insufficient refrigerant in A/C system.	—
☞ B1551	Serial Communication Circuit Malfunction	9	1	Circuit voltage of serial communication circuit is higher than specification.	Flashed
		9	2	Circuit voltage of serial communication circuit is lower than specification.	Flashed
☞ B1552	HVAC Control Module Check Sum Error	9	4	HVAC control module received unspecified data from BCM more than 8 times.	Flashed
☞ B1553	CAN Communication Circuit Malfunction	10	4	HVAC control module received signal indicating reception error from ECM.	Flashed
☞ B1557	VSS Signal Failure	11	4	HVAC control module receives invalid data of VSS signal from BCM.	—
☞ B1561	ECT signal Failure	5	4	HVAC control module receives invalid data of ECT signal from BCM.	Flashed
☞ B1562	Outside Temperature Sensor Signal Failure	1	4	HVAC control module receives invalid data of outside air temperature sensor signal from BCM.	Flashed
☞ B1563	A/C Refrigerant Pressure Sensor Signal Failure	13	4	HVAC control module receives invalid data of A/C refrigerant pressure sensor signal from BCM.	—

DTC No. (displayed on SUZUKI scan tool)	Detection item	DTC (indicated on HVAC control module)		Condition when trouble detected (DTC is determined when following condition detected)	"A/C" indicator light
		Indicated by "REC" indicator light	Indicated by "FRE" indicator light		
☞ B1570	Engine Type Signal Failure	20	4	HVAC control module receives invalid data of engine type signal from BCM.	—
☞ B1571	Combination Meter Spec Signal Failure	21	4	HVAC control module receives invalid data of combination meter spec signal from BCM.	—
NO CODE	Normal	See NOTE below		—	—

DTC of A/C System detected by ECM

DTC No.	Detection item	Detecting condition (DTC will set when detecting)	MIL
P0481	Fan 2 Control Circuit	Refer to "Fail-Safe Table in Section 1A".	
P0532	A/C Refrigerant Pressure Sensor Circuit Low		
P0533	A/C Refrigerant Pressure Sensor Circuit High		

NOTE

When no DTC is detected, "FRE" [A] and "REC" [B] indicator lights on HVAC control module flash at the same time in specific pattern.

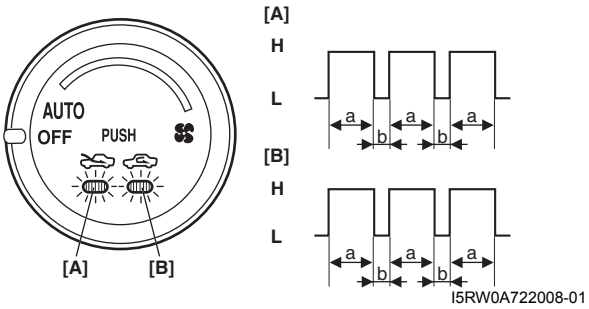

H: ON	a. About 3 seconds
L: OFF	b. About 1 seconds

Fail-Safe Table

S7RW0A7224007

When any of the following malfunctions (DTCs) is detected, fail-safe mode is activated.
However, when HVAC control module detects normal operation of A/C system, fail-safe mode is canceled.

DTC No.	Trouble Area	Fail-Safe Operation	
		When ignition switch is turned ON after malfunction is already detected	When malfunction is detected during ignition switch is ON
☞ B1502	Inside air temperature sensor circuit	HVAC control module maintains last normal value.	HVAC control module controls actuators assuming that inside air temperature is 25 °C (77 °F).
☞ B1503	A/C evaporator temperature sensor circuit	HVAC control module assuming that evaporator temperature is 0 °C (32 °F).	• HVAC control module turns off A/C switch signal. • HVAC control module controls actuators assuming that evaporator temperature is 0 °C (32 °F).
☞ B1504	Sunload sensor circuit	HVAC control module maintains last normal value.	HVAC control module controls actuators assuming that amount of sunlight is 0 W/m^2.

DTC No.	Trouble Area	Fail-Safe Operation	
		When ignition switch is turned ON after malfunction is already detected	When malfunction is detected during ignition switch is ON
☞ B1520	Temperature selector malfunction	HVAC control module maintains last normal value.	HVAC control module controls actuators assuming that setting of temperature selector is 25 °C (77 °F) position.
☞ B1521	Blower speed selector malfunction	HVAC control module maintains last normal value.	HVAC control module controls actuators assuming that setting of blower speed selector is low (1st) position.
☞ B1522	Air flow selector malfunction	HVAC control module maintains last normal value.	HVAC control module controls actuators assuming that setting of air flow selector is DEF position.
☞ B1551	Serial communication circuit	• HVAC control module maintains last normal value of outside air temperature. 4 seconds after, HVAC control module assuming that outside air temperature is 20 °C (68 °F). • HVAC control module maintains last normal value of engine coolant temperature. 4 seconds after, HVAC control module assuming that engine coolant temperature is 80 °C (176 °F). • HVAC control module controls actuators assuming that vehicle speed is 40 km/h (25 mph). • HVAC control module controls actuators assuming that engine type signal is J20. • HVAC control module controls actuators assuming that combination meter spec signal is US.	HVAC control module controls actuators assuming that outside air temperature is 20 °C (68 °F), engine coolant temperature is 80 °C (176 °F), vehicle speed is 40 km/h (25 mph), engine type signal is J20 and combination meter spec signal is US.
☞ B1552	HVAC control module check sum error		
☞ B1553	CAN communication circuit		
☞ B1557	VSS signal failure	HVAC control module controls actuators assuming that vehicle speed is 40 km/h (25 mph).	
☞ B1561	ECT signal failure	HVAC control module maintains last normal value of engine coolant temperature. 4 seconds after, HVAC control module assuming that engine coolant temperature is 80 °C (176 °F).	HVAC control module controls actuators assuming that engine coolant temperature is 80 °C (176 °F).
☞ B1562	Outside air temperature signal failure	HVAC control module maintains last normal value of outside air temperature. 4 seconds after, HVAC control module assuming that outside air temperature is 20 °C (68 °F).	HVAC control module controls actuators assuming that outside air temperature is 20 °C (68 °F).
☞ B1570	Engine type signal failure	HVAC control module controls actuators assuming that engine type signal is J20.	
☞ B1571	Combination meter spec signal failure	HVAC control module controls actuators assuming that combination meter spec signal is US.	

Scan Tool Data

S7RW0A7224008

As the data values given in the following are standard values estimated on the basis of values obtained from the normally operation vehicles by using a scan tool, use them as reference values. Even when the vehicles are in good condition, there may be cases where the checked values do not fall within each specifies data range. Therefore, judgement as abnormal should not be made by checking with these data alone.

Scan Tool Data	Condition	Normal Condition / Reference Value
☞ TEMP CONT SWITCH	Ignition switch turned ON and temperature selector at maximum cool position	MAX Cool (Selected position of temperature selector is displayed)
☞ CABIN TEMPERATURE	Ignition switch turned ON	In-car temperature is displayed
☞ OUTSIDE AIR TEMP	Ignition switch turned ON	Outside air temperature is displayed
☞ EVAPORATOR TEMP	Ignition switch turned ON	Evaporator temperature is displayed
☞ COOLANT TEMP	Ignition switch turned ON	Engine coolant temperature is displayed
☞ SUN LOAD	Reference value depends on the situation	0 W/m^2 – 1988 W/m^2
☞MODE CONT SWITCH	Ignition switch turned ON and air flow selector at AUTO position	AUTO (Selected position of air flow selector is displayed)
☞ FAN CONT SWITCH	Ignition switch turned ON and blower speed selector at AUTO position	AUTO (Selected position of blower speed selector is displayed)
☞ FAN DESIRED VOLT	Ignition switch turned ON and blower speed selector at High	Approx. 12.0 V
	Ignition switch turned ON and blower speed selector at Low	Approx. 4.0 V
☞ AIR MIX POS SEN	Ignition switch turned ON and temperature selector at maximum cool position	Approx. 0.5 V
	Ignition switch turned ON and temperature selector at maximum hot position	Approx. 4.5 V
☞MODE POS SENSOR	Ignition switch turned ON and air flow selector at DEF position	Approx. 4.5 V
	Ignition switch turned ON and air flow selector at VENT position	Approx. 0.5 V
☞ A/C CONT SIG	A/C switch turned ON, blower speed selector at other than OFF position with engine running	ON
	A/C switch turned OFF with engine running	OFF
☞ BLOWER LOAD SIG	Ignition switch turned ON, blower speed selector at other than OFF position	ON
	Ignition switch turned ON, blower speed selector at OFF position	OFF
☞ AIR INTAKE MODE	Ignition switch turned ON and air intake selector at fresh air (FRE) position	FRE
	Ignition switch turned ON and air intake selector at recirculation air (REC) position	REC
	Ignition switch turned ON, air flow selector and blower speed selector at AUTO position	AUTO
☞ REFRIGERANT PRESSURE	A/C ON (A/C is operating) with engine running at ambient temperature 30 °C (86 °F)	1130 – 1560 kPa (For details, refer to pressure of high pressure gauge under “A/C System Performance Inspection: Manual Type”)
	A/C OFF (A/C is not operating) with engine running at ambient temperature 30 °C (86 °F) and engine coolant temperature 90 °C (194 °F) – 100 °C (212 °F)	600 – 1000 kPa after longer than 10 minute for A/C switch turned off
☞ A/C COMP CLUTCH	A/C switch turned ON, blower speed selector at other than OFF position with engine running	ON
	A/C switch turned OFF with engine running	OFF
☞ VEHICLE SPEED	At stop with ignition switch turned ON	0 km/h (0 mph)
☞ ENGINE TYPE	Ignition switch turned ON	Engine type is displayed.

Scan Tool Data	Condition	Normal Condition / Reference Value
☞ METER SPEC	Ignition switch turned ON	Combination meter spec is displayed.

Scan Tool Data Definitions

TEMP CONT SWITCH: (Temperature control selector position, Max Cool, °C / °F, Max Hot): This parameter indicates the selected position of temperature control selector.

CABIN TEMPERATURE: (In-car temperature, °C, °F): This parameter indicates the in-car temperature detected by inside air temperature sensor.

OUTSIDE AIR TEMP (Outside air temperature, °C, °F): This parameter indicates the outside air temperature detected by outside air temperature sensor.

EVAPORATOR TEMP (Evaporator temperature, °C, °F): This parameter indicates the temperature of air passed through evaporator.

COOLANT TEMP (Engine Coolant Temperature °C, °F): This parameter indicates the engine coolant temperature detected by engine coolant temperature sensor.

SUN LOAD (W/m^2): This parameter indicates the amount of sunlight detected by sunload sensor.

MODE CONT SWITCH (Air flow selector position, AUTO, FACE, B/L, FOOT, D/F, DEF): This parameter indicates the selected position of air flow selector.

FAN CONT SWITCH (Blower speed selector, AUTO, OFF, 1st – 8th): This parameter indicates the selected position of blower speed selector.

FAN DESIRE VOLT (Fan desired voltage, V): This parameter indicates the consumption voltage of blower motor.

AIR MIX POS SENSOR (Temperature control actuator position sensor, V): This parameter indicates the input signal from position sensor in temperature control actuator.

MODE POS SENSOR (Air flow control actuator position sensor, V): This parameter indicates the input signal from position sensor in air flow control actuator.

A/C CONT SIG (A/C control signal, ON, OFF): This parameter indicates the state of A/C switch.

BLOWER LOAD SIG (Blower fan load signal, ON, OFF): ON: Position of blower speed selector is 1st position or more.
OFF: Position of blower speed selector is OFF position.

AIR INTAKE MODE (Air intake selector position, AUTO, FRE, REC): This parameter indicates the selected position of air intake selector.

REFRIGERANT PRESSURE (A/C refrigerant absolute pressure, kPa): This parameter indicates the A/C refrigerant absolute pressure calculated by ECM

A/C COMP CLUCH (A/C compressor magnet clutch, ON, OFF): This parameter indicates the state of the A/C compressor magnet clutch.

VEHICLE SPEED (km/h, mph): This parameter indicates the vehicle speed calculated by ECM.

ENGINE TYPE (Engine type signal, J20, M16 or M15): This parameter indicates the engine type signal transmitted by ECM.

METER SPEC (Combination meter spec signal, EU, UK, US, Canada, DOM): This parameter indicates the combination meter spec signal transmitted by combination meter.

Visual Inspection

S7RW0A7224009

Check visually the following parts and systems.

Inspection item		Correction
• Refrigerant	leakage and amount	
• A/C pipe or hose	disconnection, looseness and deterioration	
• A/C compressor drive belt	looseness and damage	Refer to “Compressor Drive Belt Inspection and Adjustment: Manual Type”.
• Battery • Connectors of electric wire harness	fluid level and corrosion of terminal disconnection and friction	
• Fuses • Parts	burning installation and damage	
• Other parts that can be checked visually		

DTC B1502: Inside Air Temperature Sensor Circuit Malfunction

S7RW0A7224010

Wiring Diagram

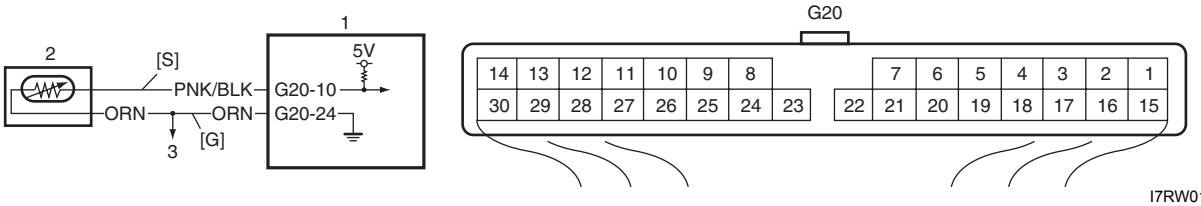

I7RW01722004-01

[S]: Inside air temperature sensor signal circuit	1. HVAC control module	3. To other sensors
[G]: Inside air temperature sensor ground circuit	2. Inside air temperature sensor	

DTC Detecting Condition and Trouble Area

DTC Detecting Condition	Trouble Area
Inside air temperature sensor signal voltage is higher than or lower than specified value for specified time continuously.	• Inside air temperature sensor circuit • Inside air temperature sensor • HVAC control module

DTC Troubleshooting

NOTE

When DTC B1503, B1504, B1511 and B1512 are indicated together, it is possible that sensor ground circuit is open.

Step	Action	Yes	No
1	*Was "Air Conditioning System Check" performed?*	Go to Step 2.	Go to "Air Conditioning System Check: Automatic Type".
2	**Wire harness check** 1) Turn ignition switch to OFF position. 2) Disconnect connectors from inside air temperature sensor and HVAC control module. 3) Check for proper connection to each signal circuit terminal and ground circuit terminal of inside air temperature sensor and HVAC control module connectors. 4) If OK, check that inside air temperature sensor circuit is as follows. • Wiring harness resistance of each inside air temperature sensor signal circuit and ground circuit is less than 3 Ω • Insulation resistance between inside air temperature sensor signal circuit and vehicle body ground is infinity • Circuit voltage of each inside air temperature sensor signal circuit and ground circuit is 0 – 1 V with ignition switch turned ON *Are they in good condition?*	Go to Step 3.	Inside air temperature sensor signal circuit and/or ground circuit are open, short or high resistance.

Step	Action	Yes	No
3	**Inside air temperature sensor reference voltage check** 1) Connect connector to HVAC control module with ignition switch turned OFF. 2) Turn ignition switch to ON position. 3) Measure voltage between signal terminal and ground terminal of inside air temperature sensor connector. *Is voltage 4.5 – 5.5 V?*	Go to Step 4.	Substitute a known-good HVAC control module and recheck.
4	**Inside air temperature sensor check** 1) Check inside air temperature sensor for performance referring to “Inside Air Temperature Sensor Inspection: Automatic Type”. *Is it in good condition?*	Substitute a known-good HVAC control module and recheck.	Replace inside air temperature sensor.

DTC B1503: Evaporator Temperature Sensor Circuit Malfunction

S7RW0A7224011

Wiring Diagram

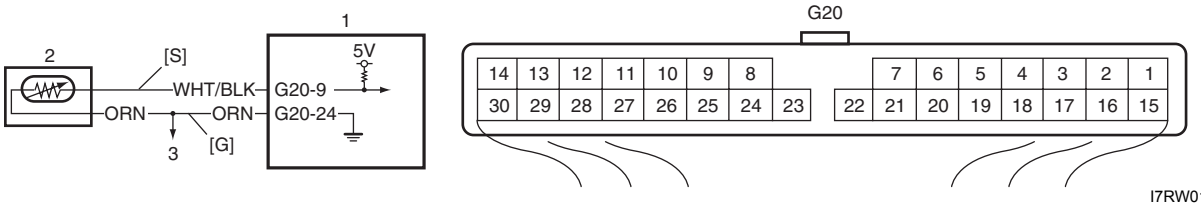

I7RW01722005-01

[S]: Evaporator temperature sensor signal circuit	1. HVAC control module	3. To other sensors
[G]: Evaporator temperature sensor ground circuit	2. Evaporator temperature sensor	

DTC Detecting Condition and Trouble Area

DTC Detecting Condition	Trouble Area
Evaporator temperature sensor signal voltage is higher than or lower than specified value for specified time continuously.	• Evaporator temperature sensor circuit • Evaporator temperature sensor • HVAC control module

DTC Troubleshooting

NOTE

When DTC B1502, B1504, B1511 and B1512 are indicated together, it is possible that sensor ground circuit is open.

Step	Action	Yes	No
1	*Was "Air Conditioning System Check" performed?*	Go to Step 2.	Go to "Air Conditioning System Check: Automatic Type".
2	**Wire harness check** 1) Turn ignition switch to OFF position. 2) Disconnect connectors from evaporator temperature sensor and HVAC control module. 3) Check for proper connection to each signal circuit terminal and ground circuit terminal of evaporator temperature sensor and HVAC control module connectors. 4) If OK, check that evaporator temperature sensor circuit is as follows. • Wiring harness resistance of each evaporator temperature sensor signal circuit and ground circuit is less than 3 Ω • Insulation resistance between evaporator temperature sensor signal circuit and vehicle body ground is Infinity • Circuit voltage of each evaporator temperature sensor signal circuit and ground circuit is 0 - 1 V with ignition switch turned ON *Are they good condition?*	Go to Step 3.	Evaporator temperature sensor signal circuit and/or ground circuit are open, short or high resistance.
3	**Evaporator temperature sensor reference voltage check** 1) Connect connector to HVAC control module with ignition switch turned OFF. 2) Turn ignition switch to ON position. 3) Measure voltage between signal terminal and ground terminal of evaporator temperature sensor connector. *Is voltage 4.5 – 5.5 V?*	Go to Step 4.	Substitute a known-good HVAC control module and recheck.
4	**Evaporator temperature sensor check** 1) Check evaporator temperature sensor for performance referring to "Evaporator Temperature Sensor Inspection: Automatic Type". *Is it in good condition?*	Substitute a known-good HVAC control module and recheck.	Replace evaporator temperature sensor.

DTC B1504: Sunload Sensor Circuit Malfunction

S7RW0A7224012

Wiring Diagram

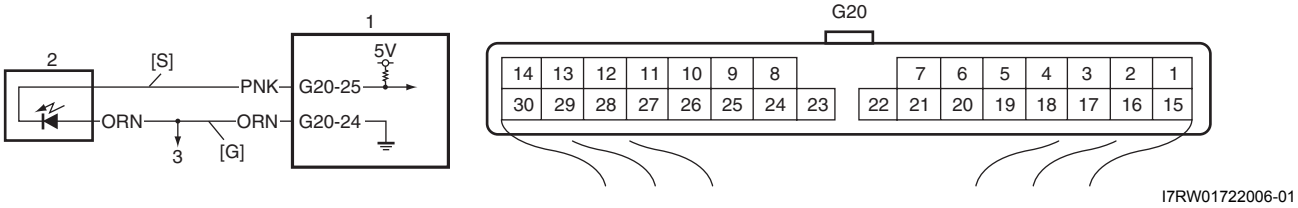

[S]: Sunload sensor signal circuit	1. HVAC control module	3. To other sensors
[G]: Sunload sensor ground circuit	2. Sunload sensor	

DTC Detecting Condition and Trouble Area

NOTE

When DTC B1502, B1503, B1511 and B1512 are indicated together, it is possible that sensor ground circuit is open.

DTC Detecting Condition	Trouble Area
• Sunload sensor signal voltage is higher than or lower than specified value for specified time continuously. • Without sunlight	• Sunload sensor circuit • Sunload sensor • HVAC control module

DTC Troubleshooting

Step	Action	Yes	No
1	*Was "Air Conditioning System Check" performed?*	Go to Step 2.	Go to "Air Conditioning System Check: Automatic Type".
2	**Wire harness check** 1) Turn ignition switch to OFF position. 2) Disconnect connectors from sunload sensor and HVAC control module. 3) Check for proper connection to each signal circuit terminal and ground circuit terminal of sunload sensor and HVAC control module connectors. 4) If OK, check that sunload sensor circuit is as follows. • Wiring harness resistance of each sunload sensor signal circuit and ground circuit is less than 3 Ω • Insulation resistance of each sunload sensor signal circuit and ground circuit between sunload sensor connector and vehicle body ground is Infinity • Circuit voltage of each sunload sensor signal circuit and ground circuit is 0 – 1 V with ignition switch turned ON *Are they in good condition?*	Go to Step 3.	Sunload sensor power supply circuit and/or signal circuit are open, short or high resistance.
3	**Sunload sensor power supply voltage check** 1) Connect connector to HVAC control module with ignition switch turned OFF. 2) Turn ignition switch to ON position. 3) Measure voltage between signal terminal and ground terminal of sunload sensor connector. *Is voltage 4.5 – 5.5 V?*	Go to Step 4.	Substitute a known-good HVAC control module and recheck.
4	**Sunload sensor check** 1) Check sunload sensor for performance referring to "Sunload Sensor Inspection". *Is it in good condition?*	Substitute a known-good HVAC control module and recheck.	Replace sunload sensor.

DTC B1511: Temperature Control Actuator (Position Sensor) and/or Its Circuit Malfunction

S7RW0A7224013

Wiring Diagram

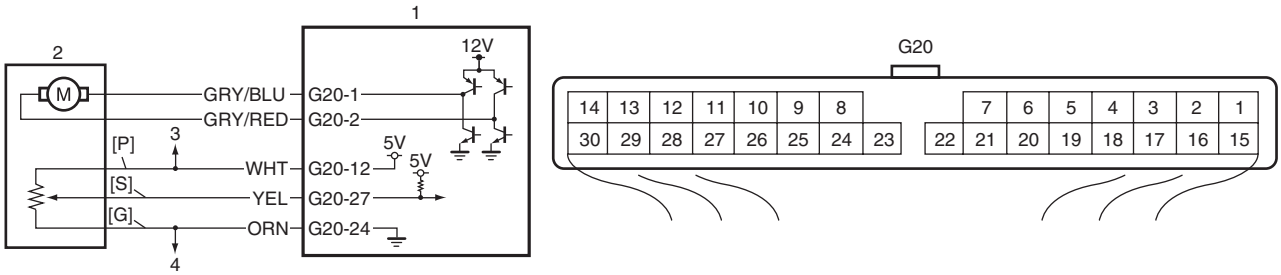

I6RW0C722004-01

[P]: Position sensor power supply circuit	[G]: Position sensor ground circuit	2. Temperature control actuator	4. To other sensors
[S]: Position sensor signal circuit	1. HVAC control module	3. To air flow control actuator	

DTC Detecting Condition and Trouble Area

DTC Detecting Condition	Trouble Area
Temperature control actuator position sensor signal voltage is higher than or lower than specified value for specified time continuously.	• Temperature control actuator circuit • Temperature control actuator • HVAC control module

DTC Troubleshooting

NOTE

- **When DTC B1502, B1503, B1504 and B1512 are indicated together, it is possible that sensor ground circuit is open.**
- **When DTC B1512 is indicated together, it is possible that position sensor power supply circuit is open.**

Step	Action	Yes	No
1	*Was "Air Conditioning System Check" performed?*	Go to Step 2.	Go to "Air Conditioning System Check: Automatic Type".
2	**Wire harness check** 1) Turn ignition switch to OFF position. 2) Disconnect connectors from temperature control actuator and HVAC control module. 3) Check for proper connection to position sensor power supply, signal and ground circuit terminals of temperature control actuator and HVAC control module connectors. 4) If OK, check that position sensor of temperature control actuator circuit is as follows. • Wiring harness resistance of each position sensor power supply, signal and ground circuit is less than 3 Ω • Insulation resistance of each position sensor power supply, signal and ground circuit is infinity between temperature control actuator connector and vehicle body ground • Circuit voltage of each position sensor power supply, signal and ground circuit is 0 - 1 V with ignition switch turned ON *Are they in good condition?*	Go to Step 3.	Position sensor power supply, signal circuit and/or ground circuit are open, short or high resistance.

Step	Action	Yes	No
3	**Position sensor of temperature control actuator power supply voltage check** 1) Connect connector to HVAC control module. 2) Turn ignition switch to ON position. 3) Measure voltage between. • Position sensor power supply terminal and position sensor ground terminal of temperature control actuator connector • Position sensor signal terminal and position sensor ground terminal of temperature control actuator connector *Is voltage 4.5 – 5.5 V?*	Go to Step 4.	Go to Step 5.
4	**Temperature control actuator check** 1) Check position sensor of temperature control actuator for performance referring to “Temperature Control Actuator and Its Circuit Inspection: Automatic Type”. *Is it in good condition?*	Substitute a known-good HVAC control module and recheck.	Replace temperature control actuator.
5	**Position sensor of temperature control actuator power supply voltage check** 1) Turn ignition switch to OFF position. 2) Disconnect connector from air flow control actuator. 3) Turn ignition switch to ON position. 4) Measure voltage between. • Position sensor power supply terminal and position sensor ground terminal of temperature control actuator connector • Position sensor signal terminal and position sensor ground terminal of temperature control actuator connector *Is voltage 4.5 – 5.5 V?*	Check air flow control actuator and its circuit.	Substitute a known-good HVAC control module and recheck.

DTC B1512: Air flow Control Actuator (Position Sensor) and/or Its Circuit Malfunction

S7RW0A7224014

Wiring Diagram

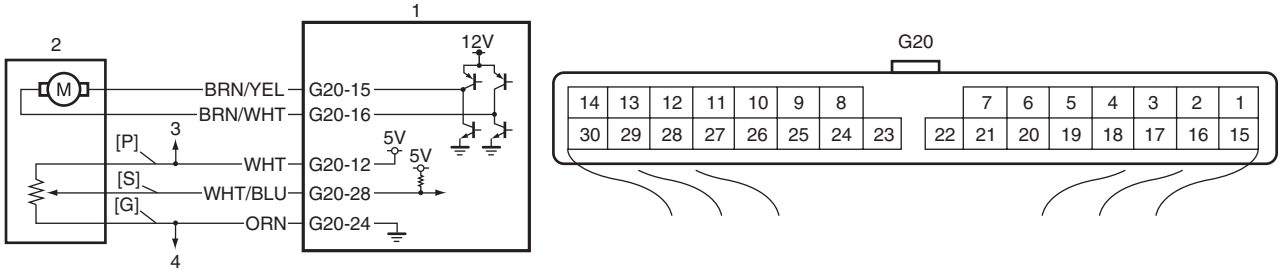

I6RW0C722005-01

[P]: Position sensor power supply circuit	[G]: Position sensor ground circuit	2. Air flow control actuator	4. To other sensors
[S]: Position sensor signal circuit	1. HVAC control module	3. To temperature control actuator	

DTC Detecting Condition and Trouble Area

DTC Detecting Condition	Trouble Area
Air flow control actuator position sensor signal voltage is higher than or lower than specified value for specified time continuously.	• Air flow control actuator circuit • Air flow control actuator • HVAC control module

DTC Troubleshooting

NOTE

- **When DTC B1502, B1503, B1504 and B1511 are indicated together, it is possible that sensor ground circuit is open.**
- **When DTC B1511 is indicated together, it is possible that position sensor power supply circuit is open.**

Step	Action	Yes	No
1	*Was "Air Conditioning System Check" performed?*	Go to Step 2.	Go to "Air Conditioning System Check: Automatic Type".
2	**Wire harness check** 1) Turn ignition switch to OFF position. 2) Disconnect connectors from air flow control actuator and HVAC control module. 3) Check for proper connection to position sensor power supply, signal and ground circuit terminals of air flow control actuator and HVAC control module connectors. 4) If OK, check that position sensor of air flow control actuator circuit is as follows. • Wiring harness resistance of each position sensor power supply, signal and ground circuit is less than 3 Ω • Insulation resistance of each position sensor power supply, signal and ground circuit is infinity between air flow control actuator connector and vehicle body ground • Circuit voltage of each position sensor power supply, signal and ground circuit is 0 - 1 V with ignition switch turned ON *Are they in good condition?*	Go to Step 3.	Position sensor power supply, signal circuit and/or ground circuit are open, short or high resistance.
3	**Position sensor of air flow control actuator power supply voltage check** 1) Connect connector to HVAC control module with ignition switch turned OFF. 2) Turn ignition switch to ON position. 3) Measure voltage between. • Position sensor power supply terminal and position sensor ground terminal of air flow control actuator connector • Position sensor signal terminal and position sensor ground terminal of air flow control actuator connector *Is voltage 4.5 – 5.5 V?*	Go to Step 4.	Go to Step 5.
4	**Air flow control actuator check** 1) Check position sensor of air flow control actuator for performance referring to "Air Flow Control Actuator and Its Circuit Inspection: Automatic Type". *Is it in good condition?*	Substitute a known-good HVAC control module and recheck.	Replace air flow control actuator.

Step	Action	Yes	No
5	**Position sensor of temperature control actuator power supply voltage check** 1) Turn ignition switch to OFF position. 2) Disconnect connector from temperature control actuator. 3) Turn ignition switch to ON position. 4) Measure voltage between. • Position sensor power supply terminal and position sensor ground terminal of air flow control actuator connector • Position sensor signal terminal and position sensor ground terminal of air flow control actuator connector *Is voltage 4.5 – 5.5 V?*	Check temperature control actuator and its circuit.	Substitute a known-good HVAC control module and recheck.

DTC B1513: Temperature Control Actuator (Motor) and/or Its Circuit Malfunction

S7RW0A7224015

Wiring Diagram

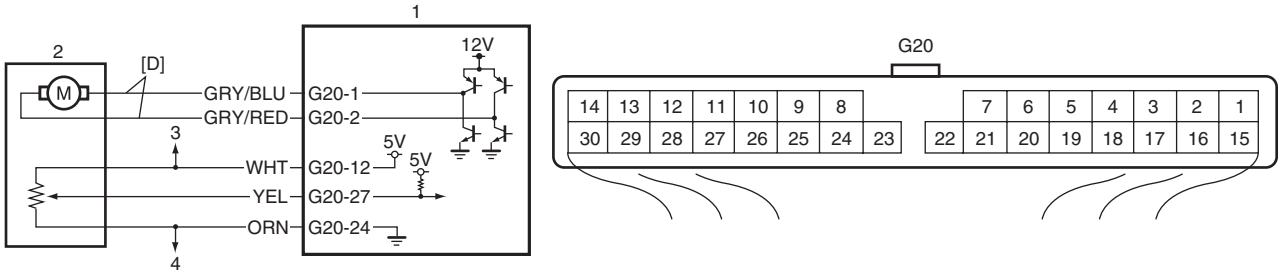

I6RW0C722006-02

[D]: Temperature control actuator motor drive circuit	2. Temperature control actuator	4. To other sensors
1. HVAC control module	3. To air flow control actuator	

DTC Detecting Condition and Trouble Area

DTC Detecting Condition	Trouble Area
Motor of temperature control actuator does not move longer than specified time.	• Temperature control actuator circuit • Temperature control linkage • Temperature control actuator • HVAC unit • HVAC control module

DTC Troubleshooting

Step	Action	Yes	No
1	*Was “Air Conditioning System Check” performed?*	Go to Step 2.	Go to “Air Conditioning System Check: Automatic Type”.
2	**DTC check** 1) Connect scan tool to DLC with ignition switch turned OFF. 2) Turn ignition switch to ON position and check DTC. *Is DTC B1511 detected together?*	Go to “DTC B1511: Temperature Control Actuator (Position Sensor) and/or Its Circuit Malfunction: Automatic Type”.	Go to Step 3.
3	**Visual Check** Check if there is any obstruction in operating range of actuator linkage and if actuator linkage operates smoothly. *Is it in good condition?*	Go to Step 4.	Obstruction in operating range of actuator linkage, actuator linkage faulty and/or internal fault of HVAC unit.

Step	Action	Yes	No
4	**Wire harness check** 1) Turn ignition switch to OFF position. 2) Disconnect connectors from temperature control actuator and HVAC control module. 3) Check for proper connection to actuator motor drive circuit terminals of temperature control actuator and HVAC control module connectors. 4) If OK, check that actuator motor drive circuit of temperature control actuator is as follows. • Wiring harness resistance of each actuator motor drive circuit is less than 3 Ω • Insulation resistance of each actuator motor drive circuit is infinity between temperature control actuator connector and vehicle body ground • Circuit voltage of each actuator motor drive circuit is 0 – 1 V with ignition switch turned ON *Are they in good condition?*	Go to Step 5.	Actuator motor drive circuit(s) is open, short or high resistance.
5	**Wire harness check** Check position sensor circuit of temperature control actuator for condition referring to Step 2 of “DTC B1511: Temperature Control Actuator (Position Sensor) and/or Its Circuit Malfunction: Automatic Type”. *Is it in good condition?*	Go to Step 6.	Repair or replace.
6	**Temperature control actuator check** 1) Check temperature control actuator for performance referring to “Temperature Control Actuator and Its Circuit Inspection: Automatic Type”. *Is it in good condition?*	Substitute a known-good HVAC control module and recheck.	Replace temperature control actuator.

DTC B1514: Air Flow Control Actuator (Motor) and/or Its Circuit Malfunction

S7RW0A7224016

Wiring Diagram

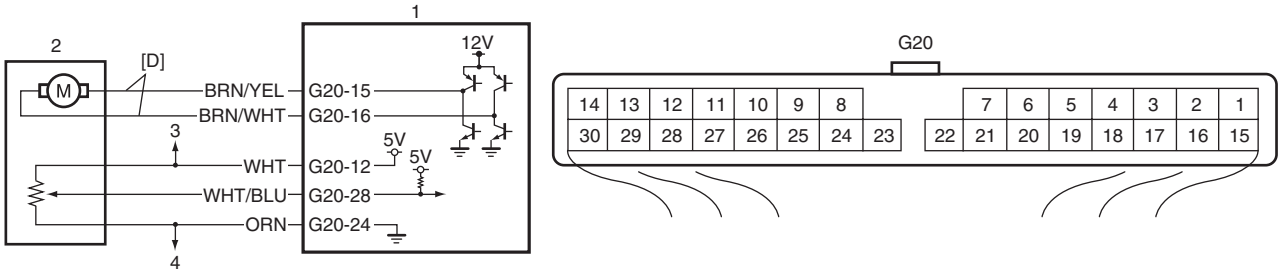

I6RW0C722007-01

[D]: Air flow actuator motor drive circuit	2. Air flow control actuator	4. To other sensors
1. HVAC control module	3. To temperature control actuator	

DTC Detecting Condition and Trouble Area

DTC Detecting Condition	Trouble Area
Motor of air flow control actuator does not move longer than specified time.	• Air flow control actuator circuit • Air flow control linkage • Air flow control actuator • HVAC unit • HVAC control module

DTC Troubleshooting

Step	Action	Yes	No
1	*Was "Air Conditioning System Check" performed?*	Go to Step 2.	Go to "Air Conditioning System Check: Automatic Type".
2	**DTC check** 1) Connect scan tool to DLC with ignition switch turned OFF. 2) Turn ignition switch to ON position and check DTC. *Is DTC B1512 detected together?*	Go to "DTC B1512: Air flow Control Actuator (Position Sensor) and/or Its Circuit Malfunction: Automatic Type".	Go to Step 3.
3	**Visual Check** Check if there is any obstruction in operating range of actuator linkage and if actuator linkage operates smoothly. *Is it in good condition?*	Go to Step 4.	Obstruction in operating range of actuator linkage, actuator linkage faulty and/or internal fault of HVAC unit.
4	**Wire harness check** 1) Turn ignition switch to OFF position. 2) Disconnect connectors from air flow control actuator and HVAC control module. 3) Check for proper connection to actuator motor drive circuit terminals of air flow control actuator and HVAC control module connectors. 4) If OK, check that actuator motor drive circuit of air flow control actuator is as follows. • Wiring harness resistance of each actuator motor drive circuit is less than 3 Ω • Insulation resistance of each actuator motor drive circuit is infinity between air flow control actuator connector and vehicle body ground • Circuit voltage of each actuator motor drive circuit is 0 – 1 V with ignition switch turned ON *Are they in good condition?*	Go to Step 5.	Actuator motor drive circuit(s) is open, short or high resistance.
5	**Wire harness check** Check position sensor circuit of temperature control actuator for condition referring to Step 2 of "DTC B1512: Air flow Control Actuator (Position Sensor) and/or Its Circuit Malfunction: Automatic Type". *Is it in good condition?*	Go to Step 6.	Repair or replace.
6	**Air Flow control actuator check** 1) Check air flow control actuator for performance referring to "Air Flow Control Actuator and Its Circuit Inspection: Automatic Type". *Is it in good condition?*	Substitute a known-good HVAC control module and recheck.	Replace air flow control actuator.

DTC B1520 / B1521 / B1522: Temperature / Blower Speed / Air Flow Selector Malfunction

S7RW0A7224017

DTC Detecting Condition and Trouble Area

DTC Detecting Condition	Trouble Area
When internal malfunction is detected in the HVAC control module.	• Temperature selector included in HVAC control module (DTC B1520) • Blower speed selector included in HVAC control module (DTC B1521) • Air flow selector included in HVAC control module (DTC B1522)

DTC Troubleshooting

Step	Action	Yes	No
1	*Was "Air Conditioning System Check" performed?*	Go to Step 2.	Go to "Air Conditioning System Check: Automatic Type".
2	**DTC check** 1) Clear DTC referring to "DTC Clearance: Automatic Type". 2) Recheck DTC. *Are DTC B1520, B1521 and/or B1522 still detected?*	Substitute a known good HVAC control module and recheck.	Intermittent trouble. Check for intermittent referring to "Intermittent and Poor Connection Inspection in Section 00".

DTC B1541: Back-Up Power Supply Circuit Malfunction

S7RW0A7224018

Wiring Diagram

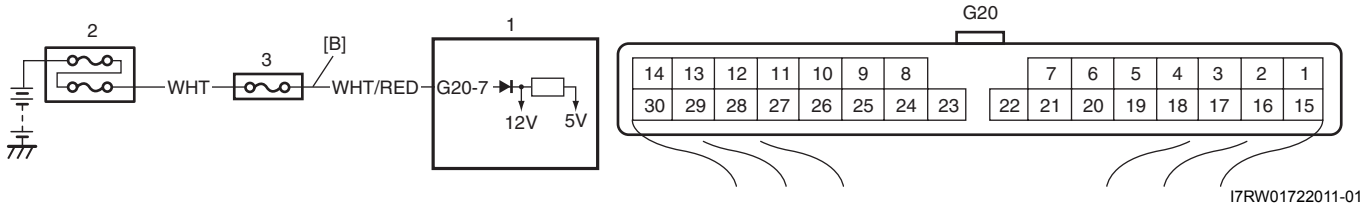

[B]: Back-up power supply circuit	2. Main fuse
1. HVAC control module	3. Circuit fuse

DTC Detecting Condition and Trouble Area

DTC Detecting Condition	Trouble Area
• Back-up power supply voltage is lower than specified value continuously. • When connect battery with vehicle and then, turn ignition switch to ON position for first time.	• Battery voltage supply circuit • HVAC control module

NOTE

When checking DTC after connecting battery cable, be sure to turn ignition switch from OFF to ON and from ON to OFF at least once, or DTC B1541 will be detected.

DTC Troubleshooting

Step	Action	Yes	No
1	*Was "Air Conditioning System Check" performed?*	Go to Step 2.	Go to "Air Conditioning System Check: Automatic Type".
2	**DTC check** 1) Turn ignition switch to ON position for 20 sec. or more. 2) Ignition switch turned OFF and connect scan tool to DLC. 3) Turn ON ignition switch and check DTC. *Is there DTC B1541?*	Go to Step 3.	Intermittent trouble. Check for intermittent referring to "Intermittent and Poor Connection Inspection in Section 00".

Step	Action	Yes	No
3	**Battery voltage supply circuit check** 1) Disconnect connector from HVAC control module with ignition switch turned OFF. 2) Check for proper connection to back-up power supply circuit terminal of HVAC control module connector. 3) If OK, measure voltage between back-up power supply circuit terminal of HVAC control module connector and vehicle body ground. *Is voltage 10 – 14 V?*	Substitute a known-good HVAC control module and recheck.	Back-up power supply circuit is open or shorted to ground.

DTC B1546: A/C Refrigerant Pressure Malfunction

S7RW0A7224019

DTC Detecting Condition and Trouble Area

DTC detecting condition	Trouble area
• A/C refrigerant pressure sensor signal voltage is lower than specified value even though outside air temperature is higher than specified value for specified time continuously. • Insufficient refrigerant in A/C system	• Insufficient of refrigerant • A/C refrigerant pressure sensor • Outside air temperature sensor • HVAC control module

DTC Troubleshooting

Step	Action	Yes	No
1	*Was “Air Conditioning System Check” performed?*	Go to Step 2.	Go to “Air Conditioning System Check: Automatic Type”.
2	**DTC check** 1) Connect scan tool to DLC with ignition switch turned OFF. 2) Turn ignition switch to ON position and check DTC in BCM. *Is DTC B1141 or B1142 (BCM) detected?*	Go to applicable DTC diag. flow.	Go to Step 3.
3	**DTC check** Check DTC in ECM. *Is DTC P0532 or P0533 detected?*	Go to applicable DTC diag. flow.	Go to Step 4.
4	**A/C refrigerant pressure and outside air temperature data check** 1) Start engine and select “DATA LIST” mode on scan tool. 2) Check “Refrigerant Pressure” and “Outside Air Temp” displayed on scan tool. *Are values of A/C refrigerant pressure sensor and outside air temperature within specified ranges indicated in “Scan Tool Data”?*	Substitute a known-good HVAC control module and recheck.	Check the amount of refrigerant and system for leaks.

DTC B1551: Serial Communication Circuit Malfunction

S7RW0A7224020

Wiring Diagram

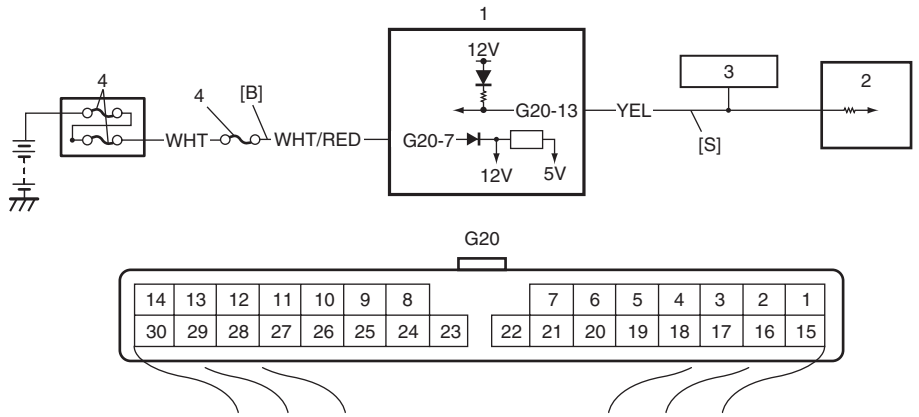

I7RW01722012-02

[B]: Back-up power supply circuit	1. HVAC control module	3. Information display
[S]: Serial communication circuit	2. BCM	4. Circuit fuse

DTC Detecting Condition and Trouble Area

DTC detecting condition	Trouble area
Serial communication signal is higher than or lower than specified value for specified time continuously.	• Back-up power supply circuit • Serial communication circuit • BCM • Information display • HVAC control module

DTC Troubleshooting

Step	Action	Yes	No
1	*Was "Air Conditioning System Check" performed?*	Go to Step 2.	Go to "Air Conditioning System Check: Automatic Type".
2	**Back-up power supply circuit fuse check** 1) Check back-up power supply circuit fuse for blowing. *Is fuse(s) blown?*	Replace blown fuse and check for short in back-up power supply circuit.	Go to Step 3.
3	**Wire harness check** 1) Turn ignition switch to OFF position. 2) Disconnect connectors from BCM, information display and HVAC control module. 3) Check for proper connection to serial communication circuit terminal of BCM, information display and HVAC control module connectors. 4) If OK, check that serial communication circuit is as follows. • Wiring harness resistance of serial communication circuit is less than 3 Ω • Insulation resistance between serial communication circuit terminal and vehicle body ground is Infinity • Circuit voltage of serial communication circuit is 0 - 1 V with ignition switch turned ON *Are they in good condition?*	Go to Step 4.	Serial communication circuit is open, short or high resistance.

Step	Action	Yes	No
4	**Serial communication signal check** 1) Connect connectors to BCM and HVAC control module with ignition switch turned OFF. 2) Turn ignition switch to ON position. 3) Check that serial communication signal is outputted from BCM referring to “Voltage Check” under “Inspection of BCM and Its Circuits in Section 10B”. *Is serial communication signal outputted?*	Replace information display.	Go to Step 5.
5	**Communication data check** 1) Connect connector to information display with ignition switch turned OFF. 2) Check that serial communication signal is outputted from BCM referring to “Voltage Check” under “Inspection of BCM and Its Circuits in Section 10B”. *Is serial communication signal outputted?*	Substitute a known-good HVAC control module and recheck.	Substitute a known-good BCM and recheck.

DTC B1552: HVAC Control Module Check Sum Error

S7RW0A7224021

DTC Detecting Condition and Trouble Area

DTC detecting condition	Trouble area
Data received by HVAC control module from BCM is erroneous continuously.	• BCM • HVAC control module

DTC Troubleshooting

Step	Action	Yes	No
1	*Was “Air Conditioning System Check” performed?*	Go to Step 2.	Go to “Air Conditioning System Check: Automatic Type”.
2	**Serial communication signal data check** 1) Connect scan tool to DLC with ignition switch turned OFF. 2) Start engine and select “DATA LIST” mode on scan tool. 3) Check “Refrigerant Pressure”, “Vehicle Speed”, “Coolant Temp” and “Outside Air Temp” displayed on scan tool. *Are values of A/C refrigerant pressure sensor and outside air temperature within specified ranges indicated in “Scan Tool Data”?*	Intermittent trouble. Check for intermittent referring to “Intermittent and Poor Connection Inspection in Section 00”	Substitute a known-good HVAC control module and recheck. If DTC is still detected substitute a known-good BCM and recheck.

DTC B1553: CAN Communication Circuit Malfunction

S7RW0A7224022

DTC Detecting Condition and Trouble Area

DTC detecting condition	Trouble area
HVAC control module receives error code from BCM continuously.	• CAN communication circuit • BCM • ECM • Combination meter • HVAC control module

DTC Troubleshooting

Step	Action	Yes	No
1	*Was "Air Conditioning System Check" performed?*	Go to Step 2.	Go to "Air Conditioning System Check: Automatic Type".
2	**DTC check** 1) Connect scan tool to DLC with ignition switch turned OFF. 2) Check DTC in BCM. *Is DTC U0073 (No.0073), U0100 (No.0100) and/or U0155 (No.0155) detected?*	Go to applicable DTC diag. flow.	Substitute a known-good HVAC control module and recheck.

DTC B1557: VSS Signal Failure

S7RW0A7224023

DTC Detecting Condition and Trouble Area

DTC detecting condition	Trouble area
HVAC control module receives invalid data of VSS signal from BCM.	• VSS circuit • VSS • HVAC control module

DTC Troubleshooting

Step	Action	Yes	No
1	*Was "Air Conditioning System Check" performed?*	Go to Step 2.	Go to "Air Conditioning System Check: Automatic Type".
2	**DTC check** 1) Connect scan tool to DLC with ignition switch turned OFF. 2) Check DTC in ECM. *Is DTC P0500 detected?*	Go to applicable DTC diag flow.	Substitute a known-good HVAC control module and recheck.

DTC B1561: ECT Signal Failure

S7RW0A7224024

DTC Detecting Condition and Trouble Area

DTC detecting condition	Trouble area
HVAC control module receives invalid data of ECT signal from BCM.	• ECT sensor circuit • ECT sensor • HVAC control module

DTC Troubleshooting

Step	Action	Yes	No
1	*Was "Air Conditioning System Check" performed?*	Go to Step 2.	Go to "Air Conditioning System Check: Automatic Type".
2	**DTC check** 1) Connect scan tool to DLC with ignition switch turned OFF. 2) Check DTC in ECM. *Is DTC P0116, P0117 or P0118 detected?*	Go to applicable DTC diag. flow.	Substitute a known-good HVAC control module and recheck.

DTC B1562: Outside Air Temperature Signal Failure

S7RW0A7224025

DTC Detecting Condition and Trouble Area

DTC detecting condition	Trouble area
HVAC control module receives invalid data of outside air temperature signal from BCM.	• Outside air temperature sensor circuit • Outside air temperature sensor • HVAC control module

DTC Troubleshooting

Step	Action	Yes	No
1	*Was "Air Conditioning System Check" performed?*	Go to Step 2.	Go to "Air Conditioning System Check: Automatic Type".
2	**DTC check** 1) Connect scan tool to DLC with ignition switch turned OFF. 2) Check DTC in BCM. *Is DTC B1141 or B1142 detected?*	Go to applicable DTC diag. flow.	Substitute a known-good HVAC control module and recheck.

DTC B1563: A/C Refrigerant Pressure Signal Failure

S7RW0A7224026

DTC Detecting Condition and Trouble Area

DTC detecting condition	Trouble area
HVAC control module receives invalid data of A/C refrigerant pressure signal from BCM.	• A/C refrigerant pressure sensor circuit • A/C refrigerant pressure sensor • HVAC control module

DTC Troubleshooting

Step	Action	Yes	No
1	*Was "Air Conditioning System Check" performed?*	Go to Step 2.	Go to "Air Conditioning System Check: Automatic Type".
2	**DTC check** 1) Connect scan tool to DLC with ignition switch turned OFF. 2) Check DTC in ECM. *Is DTC P0532 or P0533 detected?*	Go to applicable DTC diag. flow.	Substitute a known-good HVAC control module and recheck.

DTC B1570: Engine Type Signal Failure

S7RW0A7224027

DTC Detecting Condition and Trouble Area

DTC detecting condition	Trouble area
HVAC control module receives invalid data of engine type signal from BCM.	• CAN communication circuit • HVAC control module • ECM

DTC Troubleshooting

Step	Action	Yes	No
1	*Was "Air Conditioning System Check" performed?*	Go to Step 2.	Go to "Air Conditioning System Check: Automatic Type".
2	**Scan tool data check** 1) Connect scan tool with ignition switch turned OFF position. 2) Ignition switch turned ON and select "DATA LIST" mode. 3) Check "ENGINE TYPE" displayed on scan tool. *Is value of engine type signal within specified ranges indicated in "Scan Tool Data"?*	Substitute a known good HVAC control module and recheck.	Go to step 3.
3	**Scan tool data check** 1) Check "ENGINE TYPE" displayed on scan tool. *Is "CAN Err" displayed on scan tool data?*	Check CAN communication circuit referring to "DTC Check in Section 1A".	Substitute a known good ECM and recheck.

DTC B1571: Combination Meter Spec Signal Failure

S7RW0A7224028

DTC Detecting Condition and Trouble Area

DTC detecting condition	Trouble area
HVAC control module receives invalid data of Combination meter spec signal from BCM.	• CAN communication circuit • Combination meter • HVAC control module

DTC Troubleshooting

Step	Action	Yes	No
1	*Was "Air Conditioning System Check" performed?*	Go to Step 2.	Go to "Air Conditioning System Check: Automatic Type".
2	**Scan tool data check** 1) Connect scan tool with ignition switch turned OFF position. 2) Ignition switch turned ON and select "DATA LIST" mode. 3) Check "METER SPEC" displayed on scan tool. *Is value of combination meter spec signal within specified ranges indicated in "Scan Tool Data"?*	Substitute a known good HVAC control module and recheck.	Go to step 3.
3	**Scan tool data check** 1) Check "METER SPEC" displayed on scan tool. *Is "CAN Err" displayed on scan tool data?*	Check CAN communication circuit referring to "DTC Check in Section 1A".	Substitute a known good combination meter and recheck.

Inspection of HVAC Control Module and Its Circuit

S7RW0A7224029

HVAC control module and its circuits can be checked at HVAC control module wiring couplers by measuring voltage.

⚠ CAUTION

HVAC control module can not be checked by itself. It is strictly prohibited to connect voltmeter to HVAC control module with couplers disconnected from it.

Voltage Check

1) Remove HVAC control module referring to “HVAC Control Module Removal and Installation: Automatic Type”.
2) Check voltage at each terminal.

NOTE

As each terminal voltage is affected by the battery voltage, confirm that it is 11 V or more when ignition switch is ON.

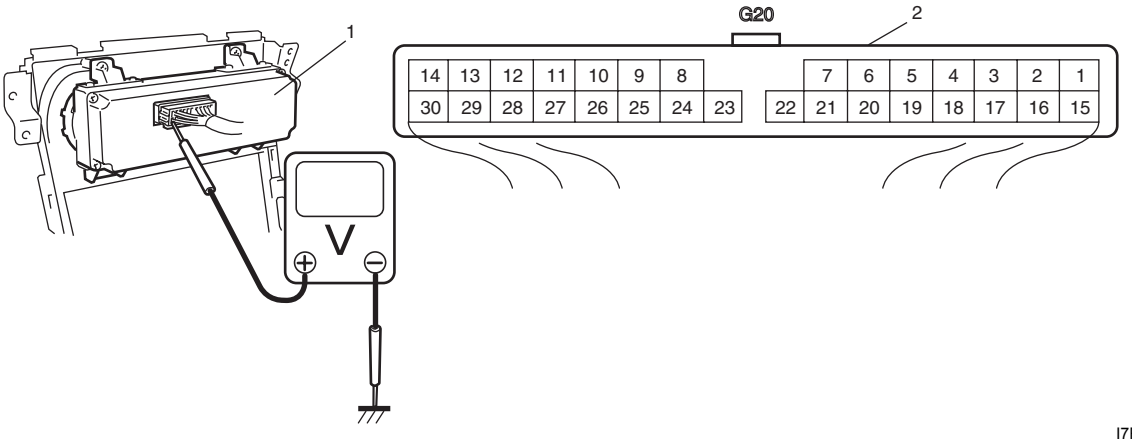

I7RW01722013-01

1. HVAC control module	2. HVAC control module connector (viewed from harness side)

Terminal	Wire Color	Circuit	Normal Voltage	Condition
G20-1	GRY/BLU	Temperature control actuator (COOL)	10 – 14 V	Ignition switch turned ON, temperature control actuator is working in operation from HOT to COOL position
			0 – 2 V	Ignition switch turned ON, except the above condition
G20-2	GRY/RED	Temperature control actuator (HOT)	10 – 14 V	Ignition switch turned ON, temperature control actuator is working in operation from COOL to HOT position
			0 – 2 V	Ignition switch turned ON, except the above condition
G20-3	BLU	Serial communication line of data link connector	10 – 14 V	Ignition switch turned ON
G20-4	GRN/YEL	Rear defogger switch	Refer to “Reference waveform No. 1: Automatic Type”.	
G20-5	BLK/YEL	Illumination ground	0 – 1 V	Full-time
G20-6	RED/YEL	Illumination switch	0 – 1 V	Ignition switch turned ON, lighting switch OFF position
			10 – 14 V	Ignition switch turned ON, lighting switch ON position
G20-7	WHT/RED	Electric power source for back-up	10 – 14 V	Constantly

Terminal	Wire Color	Circuit	Normal Voltage	Condition
G20-8	BLU/WHT	Electric load signal for blower motor	10 – 14 V	• Ignition switch turned ON, blower speed selector OFF or 1st position • Ignition switch turned ON, blower speed selector from 1st to 2nd position
			0 – 2 V	• Ignition switch turned ON, blower speed selector between 3rd and HIGH position • Ignition switch turned ON, blower speed selector from 3rd to 2nd position
G20-9	WHT/BLK	Evaporator temperature sensor signal	Approx. 2.6 V	Ignition switch turned ON, evaporator temperature 0 °C (32 °F)
			Approx. 1.7 V	Ignition switch turned ON, evaporator temperature 15 °C (59 °F)
			Approx. 1.0 V	Ignition switch turned ON, evaporator temperature 30 °C (86 °F)
G20-10	PNK/BLK	Inside air temperature sensor signal	Approx. 2.5 V	Ignition switch turned ON, room temperature 25 °C (77 °F)
			Approx. 3.7 V	Ignition switch turned ON, room temperature 0 °C (32 °F)
G20-11		—	—	—
G20-12	WHT	Output of 5 V power source for air flow control actuator position sensor and temperature control actuator position sensor	4 – 6 V	Ignition switch turned ON
G20-13	YEL	Serial communication line of BCM	Refer to “Reference waveform No. 2: Automatic Type”.	
G20-14	—	—	—	—
G20-15	BRN/YEL	Air flow control actuator (FACE)	10 – 14 V	Ignition switch turned ON, air flow control actuator is working in operation from “DEF” to “FACE” position
			0 – 1 V	Ignition switch turned ON, except the above condition
G20-16	BRN/WHT	Air flow control actuator (DEF)	10 – 14 V	Ignition switch turned ON, air flow control actuator is working in operation from “FACE” to “DEF” position
			0 – 1 V	Ignition switch turned ON, except the above condition
G20-17	GRN	Air intake actuator (FRESH AIR)	0 – 1 V	Ignition switch turned ON, air intake selector “FRE” position
			10 – 14 V	Ignition switch turned ON, air intake selector “REC” position
G20-18	RED	Air intake actuator (RECIRCULATION AIR)	0 – 1 V	Ignition switch turned ON, air intake selector “REC” position
			10 – 14 V	Ignition switch turned ON, air intake selector “FRE” position
G20-19	GRN/RED	Air intake actuator (MIX AIR)	10 – 14 V	Ignition switch turned ON, air intake selector “FRE” or “REC” position
			0 – 1 V	Ignition switch turned ON, air intake selector is working in operation from “FRE” to “REC” or “REC” to “FRE” position
G20-20	—	—	—	—
G20-21	GRN/WHT	A/C switch signal	Refer to “Reference waveform No. 1: Automatic Type”.	
G20-22	RED/BLK	Electric power source	10 – 14 V	Ignition switch turned ON
G20-23	BLK/ORN	Ground for HVAC control module	Below 0.5 V	Ignition switch turned ON
G20-24	ORN	Ground for sensors	Below 0.5 V	Ignition switch turned ON

Terminal	Wire Color	Circuit	Normal Voltage	Condition
G20-25	PNK	Sunload sensor signal	Approx. 3.5 V	Ignition switch turned ON, amount of insolation is 500 W/m^2
			Approx. 5 V	Ignition switch turned ON, amount of insolation is 0 W/m^2
G20-26	BLK/RED	Rear defogger indicator	0 – 1 V	Ignition switch turned ON, rear defogger switch OFF
			10 – 14 V	Ignition switch turned ON, rear defogger switch ON
G20-27	YEL	Temperature control actuator position sensor signal	Approx. 0.5 V	Ignition switch turned ON, temperature selector “MAX COOL” position
			Approx. 4.5 V	Ignition switch turned ON, temperature selector “MAX HOT” position
G20-28	WHT/BLU	Air flow control actuator position sensor signal	Approx. 0.5 V	Ignition switch turned ON, air flow selector “FACE” position
			Approx. 4.5 V	Ignition switch turned ON, air flow selector “DEF” position
G20-29	GRY	Blower motor controller	0 – 1 V	Ignition switch turned ON, blower speed selector OFF position
			2 – 3.5 V	Ignition switch turned ON, blower speed selector between 1st and 6th position
			Approx. 10.0 V	Ignition switch turned ON, blower speed selector 7th and HIGH position
G20-30	BLU/RED	Blower motor control voltage feedback	10 – 14 V	Ignition switch turned ON, blower speed selector OFF position
			Approx. 8.1 V	Ignition switch turned ON, blower speed selector 1st position
			Approx. 6.8 V	Ignition switch turned ON, blower speed selector 2nd position
			Approx. 5.5 V	Ignition switch turned ON, blower speed selector 3rd position
			Approx. 4.0 V	Ignition switch turned ON, blower speed selector 4th position
			Approx. 2.6 V	Ignition switch turned ON, blower speed selector 5th position
			Approx. 1.2 V	Ignition switch turned ON, blower speed selector 6th position
			Approx. 0.2 V	Ignition switch turned ON, blower speed selector 7th and HIGH position

Reference waveform No. 1

Rear defogger switch or A/C switch signal (1)

Measurement terminal	Rear defogger switch CH1: “G20-4” to “G20-23” A/C switch CH1: “G20-21” to “G20-23”
Oscilloscope setting	CH1: 5 V / DIV TIME: 10 ms / DIV
Measurement condition	Rear defogger switch: • Ignition switch is at ON position and rear defogger switch is not pushed A/C switch: • Ignition switch is at ON position and A/C switch is not pushed

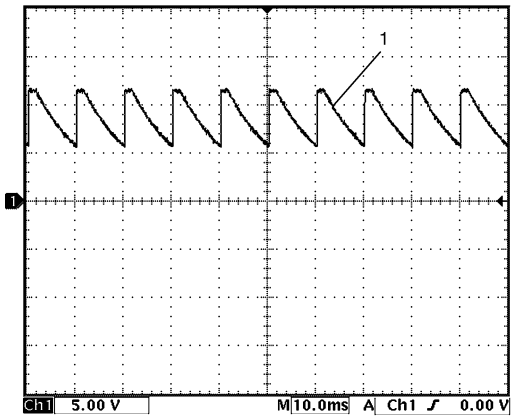

I7RW01722014-02

Reference waveform No. 2

Serial communication line of BCM (1)

Measurement terminal	CH1: “G20-13” to “G20-23”
Oscilloscope setting	CH1: 5 V / DIV TIME: 20 ms / DIV
Measurement condition	Ignition switch is at ON position

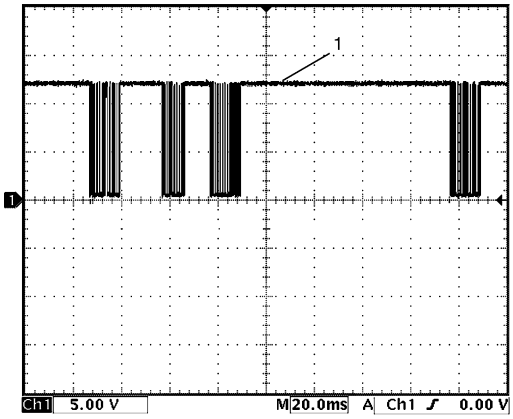

I7RW01722015-02

A/C System Inspection at ECM

S7RW0A7224030

When checking voltage at ECM terminals related to A/C system, refer to “Inspection of ECM and Its Circuits in Section 1A”.

Repair Instructions

Operation Procedure for Refrigerant Charge

S7RW0A7226001

Refer to “Operation Procedure for Refrigerant Charge: Manual Type”.

HVAC Unit Components

S7RW0A7226002

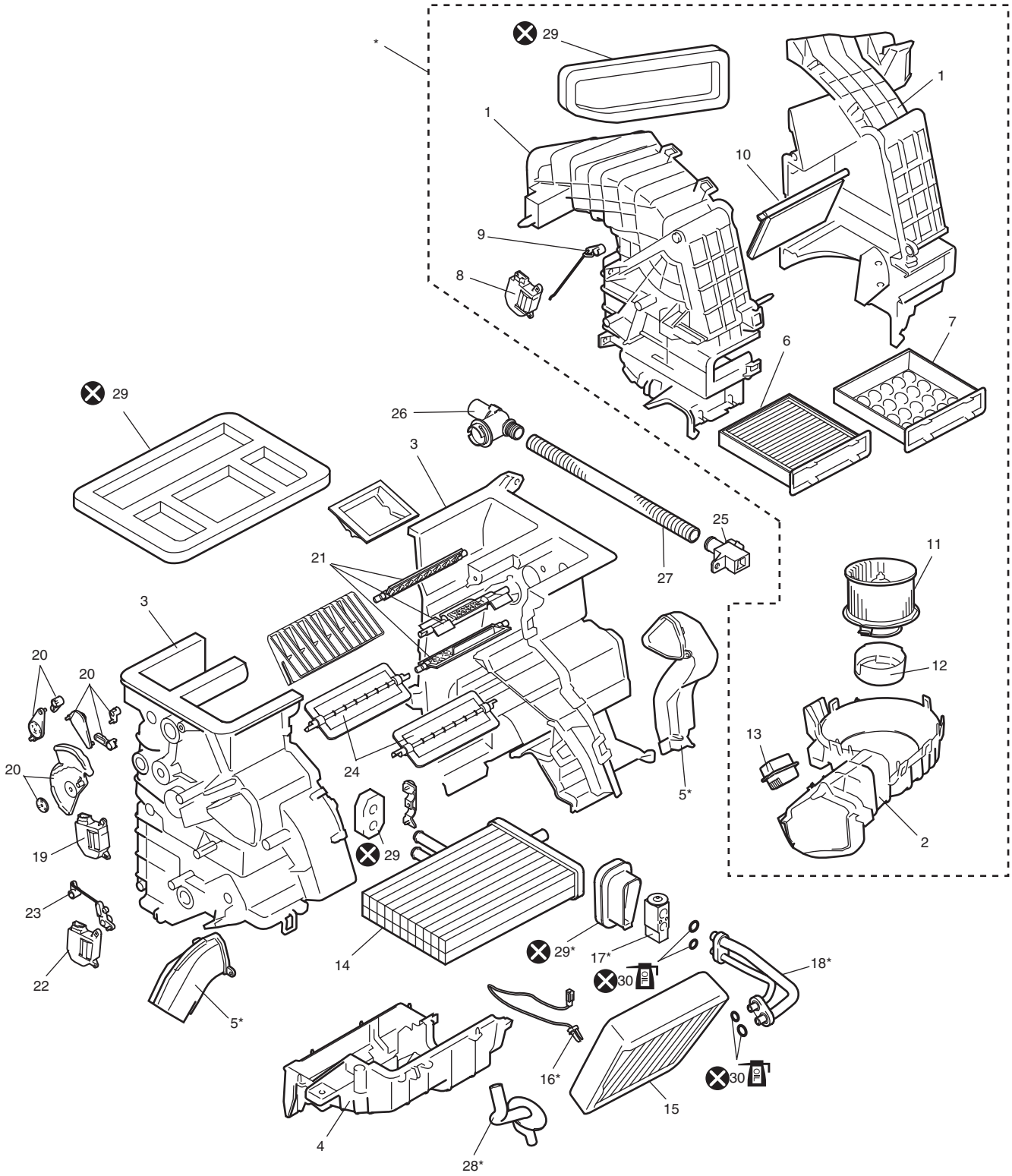

I6RW0C722008-01

1. Blower upper case	9. Air intake control link	17. Expansion valve	25. Inside air temperature sensor
2. Blower lower case	10. Air intake control door	18. Expansion pipe	26. Aspirator
3. Heater unit upper case	11. Blower motor	19. Air flow control actuator	27. Aspirator hose
4. Heater unit lower case	12. Blower motor cap	20. Air flow control links	28. Drain hose
5. Foot duct	13. Blower motor controller	21. Air flow control door assembly	29. Packing
6. HVAC air filter (if equipped)	14. Heater core	22. Temperature control actuator	30. O-ring : Apply compressor oil.
7. Cover (without HVAC air filter)	15. Evaporator	23. Temperature control link	: Do not reuse.
8. Air intake control actuator	16. Evaporator temperature sensor	24. Temperature control door assembly	

HVAC Unit Removal and Installation

S7RW0A7226003

Refer to “HVAC Unit Removal and Installation: Manual Type”.

Temperature Control Actuator Removal and Installation

S7RW0A7226004

Removal

1) Disconnect negative (–) cable at battery.
2) Remove steering column hole cover from instrument panel.
3) Remove driver side foot duct from HVAC unit.
4) Disconnect temperature control actuator connector (1).
5) Remove temperature control actuator (2) from HVAC unit by removing screws (3).

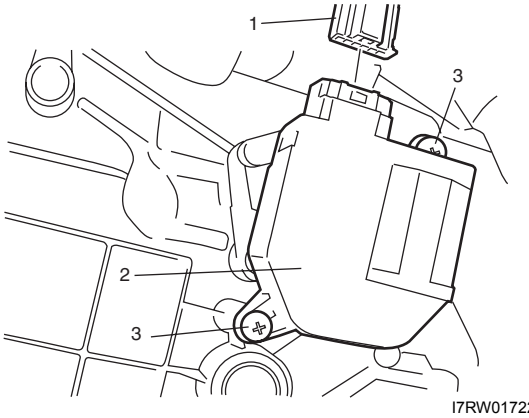

I7RW01722018-01

Installation

Reverse removal procedure noting the following instructions.

- Before installing actuator, make sure that position of actuator lever is in between “MAX HOT” position and “MAX COOL” position.
- Be sure to insert pin (1) of temperature control actuator into the groove (2) of link.

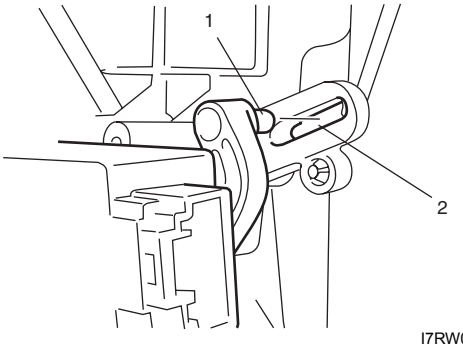

I7RW01722019-01

Temperature Control Actuator and Its Circuit Inspection

S7RW0A7226005

1) Remove temperature control actuator from HVAC unit referring to “Temperature Control Actuator Removal and Installation: Automatic Type”.
2) Connect connector to temperature control actuator.
3) Set temperature selector to “MAX COOL” position with ignition switch turned ON.
4) Connect voltage meter between terminal “2” and body ground.
5) Turn temperature selector to “MAX HOT” position.
6) Measure output voltage variation while temperature control actuator is operated from “MAX COOL” position (B) to “MAX HOT” position (A) as following specification.
   If measure voltage is out of specification or does not vary linearly as the shown in graph, check related wire circuit and HVAC control module. If wire circuits and HVAC control module are OK, go to next step.

   <u>Temperature control actuator output voltage</u>
   0.48 – 4.53V (linear variation as following graph)

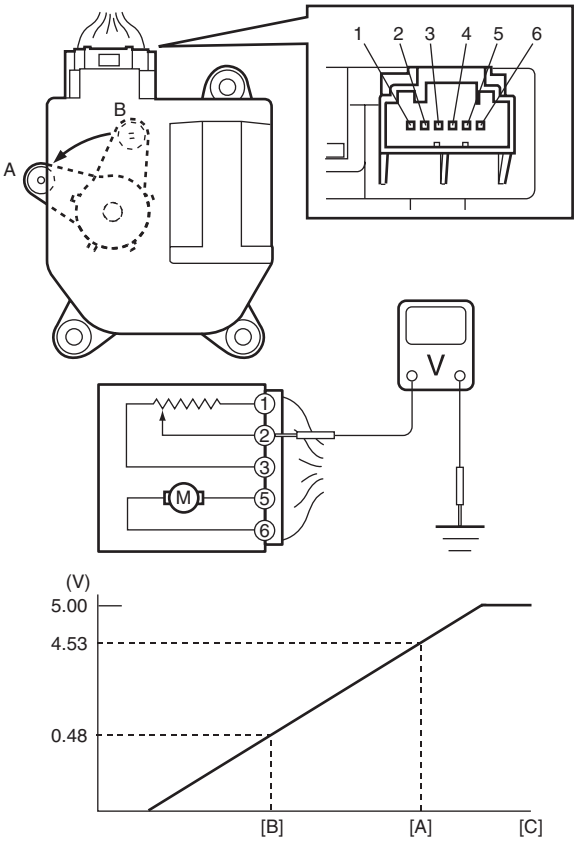

I7RW01722017-03

[A]: MAX HOT	[C]: Actuator lever position
[B]: MAX COOL	

7) Set temperature selector of HVAC control module to “MAX HOT” position with ignition switch turned ON, and make sure if the position of actuator lever is “MAX HOT” position (A).
8) Turn ignition switch to OFF position, and then disconnect connector from temperature control actuator.
9) Measure resistance between terminal “1” and “2”.

Temperature control actuator resistance between terminal “1” and “2” (MAX HOT position) (Reference value)
Approx. 0.45 kΩ at 25 °C (77 °F)

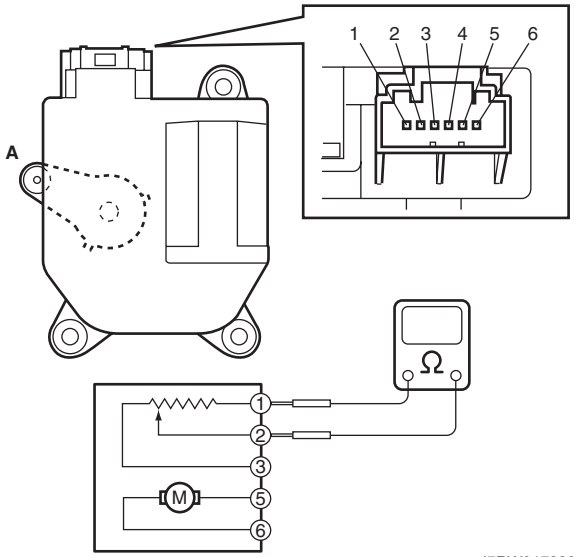

I7RW01722020-02

10) Connect connector to temperature control actuator.
11) Set temperature selector of HVAC control module to “MAX COOL” position with ignition switch turned ON, and make sure if the position of actuator lever is “MAX COOL” position (B).
12) Turn ignition switch to OFF position, and then disconnect connector from temperature control actuator.
13) Measure resistance between terminal “1” and “2”.

Temperature control actuator resistance between terminal “1” and “2” (MAX COOL position) (Reference value)
Approx. 4.3 kΩ at 25 °C (77 °F)

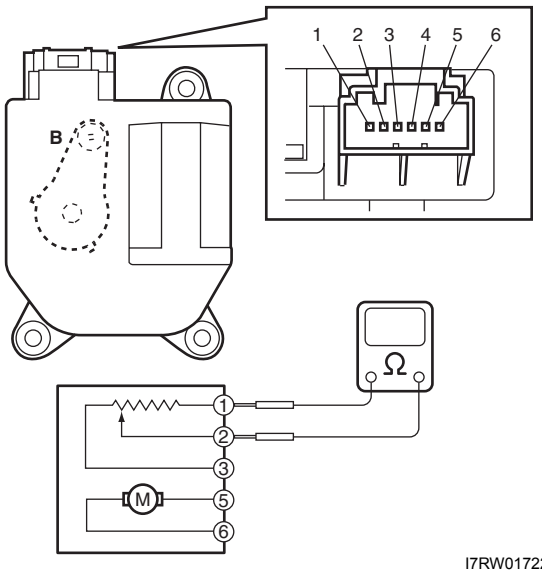

I7RW01722021-02

If measure resistance is out of specification, replace the actuator with new one.

Air Flow Control Actuator Removal and Installation

S7RW0A7226006

Removal

1) Disconnect negative cable at battery.
2) Remove steering column hole cover from instrument panel.
3) Remove driver side foot duct from HVAC unit.
4) Disconnect air flow control actuator connector (2).
5) Remove air flow control actuator (1) from HVAC unit by removing screws (3).

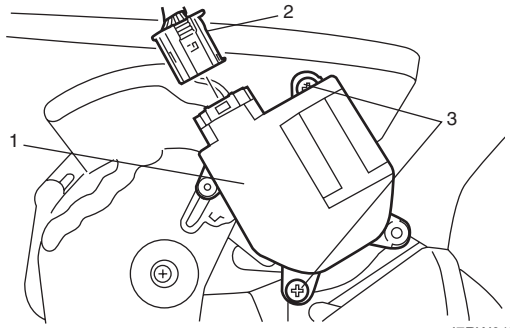

I7RW01722022-01

Installation

Reverse removal procedure noting the following instructions.

- Before installing actuator, make sure that position of actuator lever is in between “BENT” position and “DEF” position.
- Be sure to insert pin (1) of air flow control actuator into the groove (2) of link.

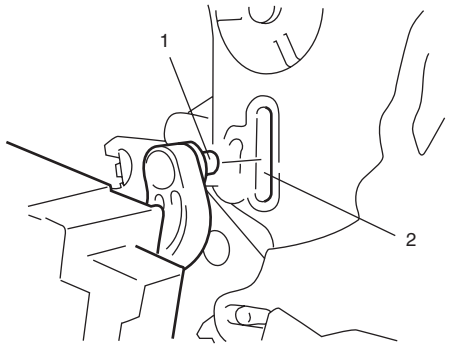

I7RW01722023-02

Air Flow Control Actuator and Its Circuit Inspection

S7RW0A7226007

1) Remove air flow control actuator from HVAC unit referring to “Air Flow Control Actuator Removal and Installation: Automatic Type”.
2) Connect connector to air flow control actuator.
3) Set air flow selector to “BENT” position with ignition switch turned ON.
4) Connect voltage meter between terminal “2” and body ground.
5) Turn air flow selector to “DEF” position.
6) Measure output voltage variation while air flow control actuator is operated from “BENT” position (A) to “DEF” position (B) as following specification.
   If measure voltage is out of specification or does not vary linearly as the shown in graph, check related wire circuit and HVAC control module. If wire circuits and HVAC control module are OK, go to next step.

   <u>Air flow control actuator output voltage</u>
   0.48 – 4.53 V (linear variation as following graph)

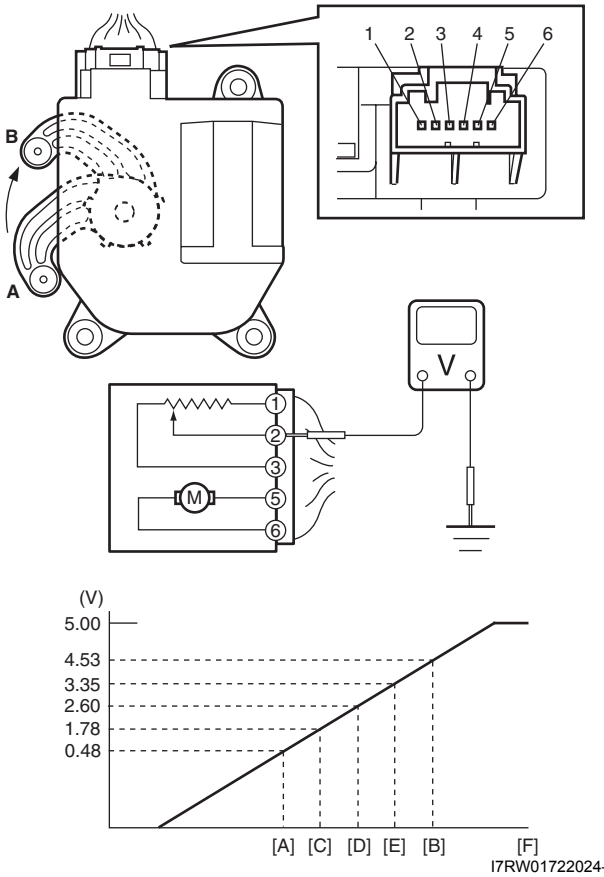

I7RW01722024-02

[A]: BENT	[D]: FOOT
[B]: DEF	[E]: DEF / FOOT
[C]: BI-LEVEL	[F]: Actuator lever position

7) Set air flow selector of HVAC control module to “DEF” position with ignition switch turned ON, and make sure if the position of actuator lever is “DEF” position (A).
8) Turn ignition switch to OFF position, and then disconnect connector from air flow control actuator.
9) Measure resistance between terminal “1” and “2”.

Air flow control actuator resistance between terminal “1” and “2” (DEF position) (Reference value)
Approx. 0.45 kΩ at 25 °C (77 °F)

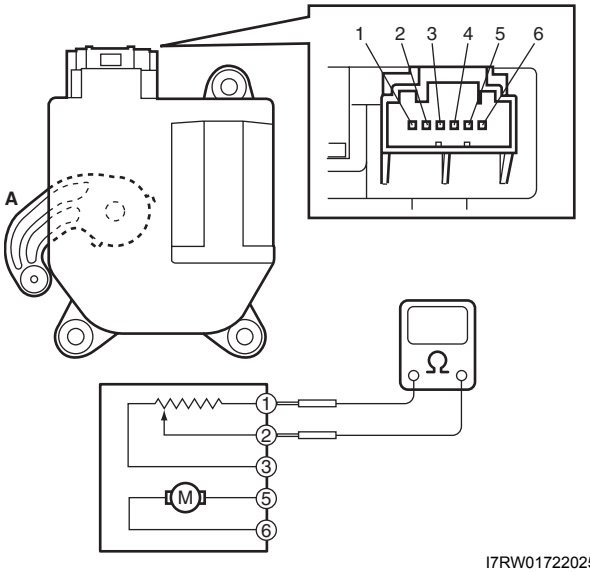

I7RW01722025-01

10) Connect connector to air flow control actuator.
11) Set air flow selector of HVAC control module to “VENT” position with ignition switch turned ON, and make sure if the position of actuator lever is “VENT” position (B).
12) Turn ignition switch to OFF position, and then disconnect connector from air flow control actuator.
13) Measure resistance between terminal “1” and “2”.

Air flow control actuator resistance between terminal “1” and “2” (VENT position) (Reference value)
Approx. 4.3 kΩ at 25 °C (77 °F)

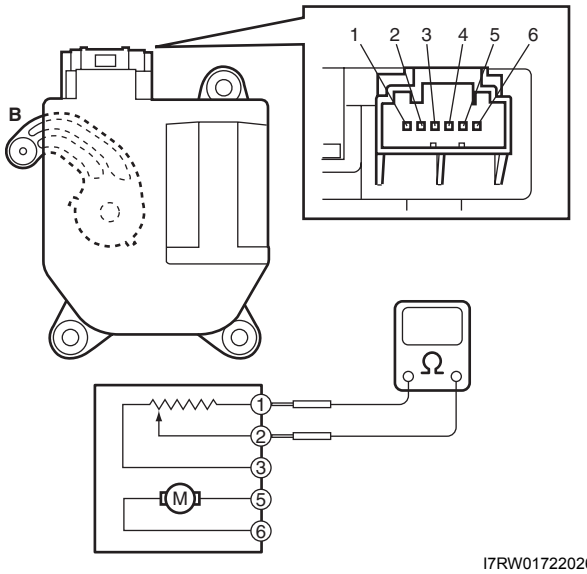

I7RW01722026-01

If measure resistance is out of specification, replace the actuator with new one.

Air Intake Actuator Removal and Installation

S7RW0A7226008

Remove and install air intake actuator referring to “Air Intake Control Actuator Removal and Installation in Section 7A”.

Air Intake Actuator Inspection

S7RW0A7226009

For inspection, refer to “Air Intake Control Actuator Inspection in Section 7A”.

Actuator Linkage Inspection

S7RW0A7226010

- Check if each actuator linkage operates smoothly.
- Check actuator rod for bend.
- Check each actuator linkage for breakage.
- Make sure if there is not any obstruction in operating range of actuator linkage.
  If any malfunction is found, repair or replace faulty part(s).

Blower Motor Controller Removal and Installation

S7RW0A7226011

Refer to “Blower Motor Resistor Removal and Installation in Section 7A”.

Blower Motor Controller Inspection

S7RW0A7226012

1) Check internal circuit of controller for resistance as follows.
   a) Measure resistance between “1” terminal and “2” terminal of blower motor controller.

      <u>Blower motor controller resistance</u>
      “1” – “2”: approximately 10 kΩ

      If resistance does not meet above specification, replace blower motor controller.
   b) Using ohmmeter, connect its positive terminal to “3” terminal of blower motor controller and negative terminal to “1” terminal of blower motor controller and check that there is no continuity.
2) Check controller for operation as follows.
   a) Using bulb (3.4 W) (5) and service wire, connect battery positive terminal to “3” terminal of blower motor controller as shown in figure.
   b) Using service wire, connect battery negative terminal to “1” terminal of blower motor controller.
   c) Arrange 3 new 1.5 V batteries (6) in series (check that total voltage is 4.5 – 5.0 V) and connect its positive terminal to “2” terminal of blower motor controller and negative terminal to “1” terminal of blower motor controller.
      Then, check that bulb lights. If bulb does not light under the above conditions, replace blower motor controller.

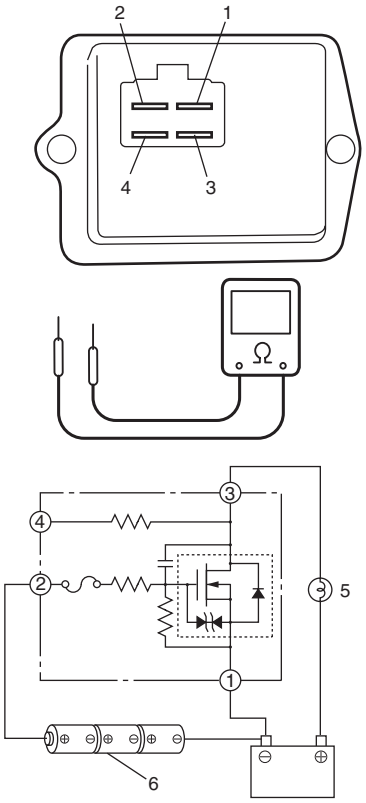

I7RW01722027-01

HVAC Control Module Removal and Installation

S7RW0A7226013

Removal

1) Remove audio unit from instrument panel referring to “Audio Unit Removal and Installation (If Equipped) in Section 9C”.
2) Remove HVAC control module (1) with its garnish (2) from instrument panel.
3) Remove HVAC control module from garnish.

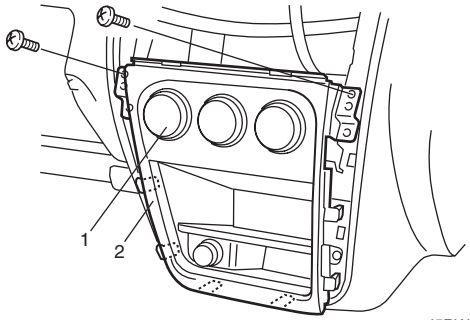

I5RW0A722024-02

Installation

Reverse removal procedure.

Sunload Sensor Removal and Installation

S7RW0A7226014

Removal

1) Disconnect negative (–) cable at battery.
2) Remove combination meter from instrument panel referring to “Combination Meter Removal and Installation in Section 9C”.
3) Remove sunload sensor (1) from instrument panel by depressing tab and pushing sensor upward from underneath.
4) Disconnect sunload sensor connector (2).

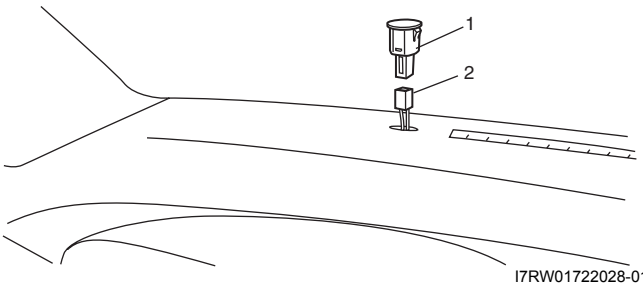

I7RW01722028-01

Installation

Reverse removal procedure noting the following instructions.

- Install sunload sensor (1) to instrument panel fitting tab (2) of sunload sensor into the groove (3) of instrument panel as shown in figure.

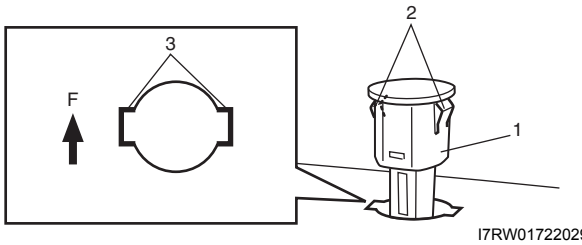

F: Vehicle forward

Sunload Sensor Inspection

S7RW0A7226015

1) Light over sunload sensor vertically with an incandescent light of approximately 100 W. The distance between sunload sensor and light should be approximately 100 mm (3.94 in.).
2) Measure voltage between terminals “a” and “b” of sunload sensor as shown in figure.
   If check result is not satisfactory, replace sunload sensor with new one.

   <u>Sunload sensor voltage specification</u>
   “a” – “b”: Approx. 0.38 – 0.42 V

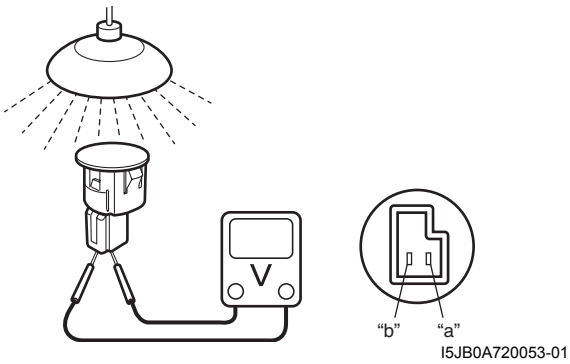

Outside Air Temperature Sensor Removal and Installation

S7RW0A7226016

Refer to “Outside Air Temperature Sensor Removal and Installation (If Equipped) in Section 9C”.

Outside Air Temperature Sensor Inspection

S7RW0A7226017

Refer to “Outside Air Temperature Sensor Inspection (If Equipped) in Section 9C”.

Inside Air Temperature Sensor Removal and Installation

S7RW0A7226018

Removal

1) Disconnect negative (–) cable at battery.
2) Remove audio unit from instrument panel referring to “Audio Unit Removal and Installation (If Equipped) in Section 9C”.
3) Remove combination meter from instrument panel referring to “Combination Meter Removal and Installation in Section 9C”.
4) Remove connector (3) and aspirator hose (1) from inside air temperature sensor (2).
5) Remove inside air temperature sensor (2) from instrument panel by removing screw (4).

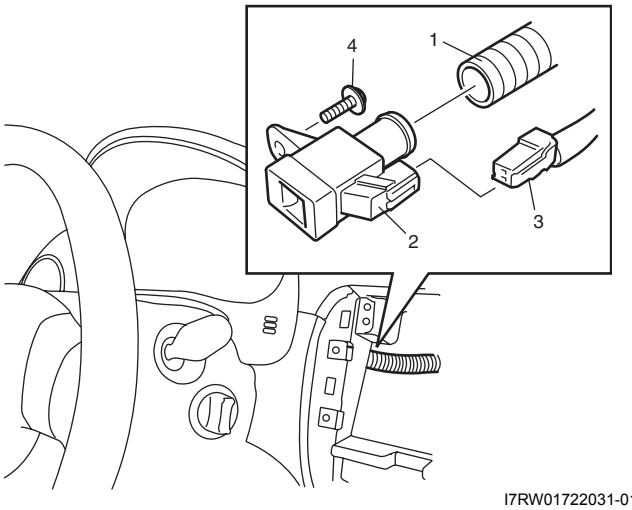

Installation

Reverse removal procedure.

Inside Air Temperature Sensor Inspection

S7RW0A7226019

Measure resistance between each connector terminal with an ohmmeter.
If resistance is incorrect, replace inside air temperature sensor with new one.

<u>Inside air temperature sensor resistance</u>
2.2 ± 0.07 kΩ at 25 °C (77 °F)

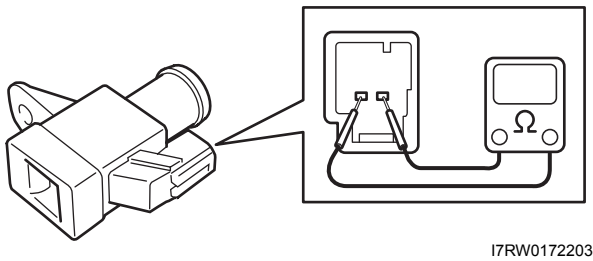

Condenser Cooling Fan Relay Inspection

S7RW0A7226020

Refer to “A/C System Relay Inspection: Manual Type”.

Condenser Cooling Fan Removal and Installation

S7RW0A7226021

Refer to “Condenser Cooling Fan Removal and Installation: Manual Type”.

Condenser Cooling Fan Inspection

S7RW0A7226022

Refer to “Condenser Cooling Fan Inspection: Manual Type”.

Condenser Assembly On-Vehicle Inspection

S7RW0A7226023

Refer to “Condenser Assembly On-Vehicle Inspection: Manual Type”.

Condenser Assembly Removal and Installation

S7RW0A7226024

Refer to “Condenser Assembly Removal and Installation: Manual Type”.

Evaporator Inspection

S7RW0A7226025

Refer to “Evaporator Inspection: Manual Type”.

Evaporator Temperature Sensor Removal and Installation

S7RW0A7226026

Refer to “Evaporator Temperature Sensor Removal and Installation: Manual Type”.

Evaporator Temperature Sensor Inspection

S7RW0A7226027

Refer to “Evaporator Temperature Sensor Inspection: Manual Type”.

Expansion Valve Removal and Installation

S7RW0A7226028

Refer to “Expansion Valve Removal and Installation: Manual Type”.

Expansion Valve Inspection

S7RW0A7226029

Refer to “Expansion Valve Inspection: Manual Type”.

A/C Refrigerant Pressure Sensor and Its Circuit Inspection

S7RW0A7226030

Refer to “A/C Refrigerant Pressure Sensor and Its Circuit Inspection: Manual Type”.

A/C Refrigerant Pressure Sensor Removal and Installation

S7RW0A7226031

Refer to “A/C Refrigerant Pressure Sensor Removal and Installation: Manual Type”.

Compressor Relay Inspection

S7RW0A7226032

Refer to “A/C System Relay Inspection: Manual Type”.

Compressor Drive Belt Inspection and Adjustment

S7RW0A7226033

Refer to “Compressor Drive Belt Inspection and Adjustment: Manual Type”.

Compressor Drive Belt Removal and Installation

S7RW0A7226034

Refer to “Compressor Drive Belt Removal and Installation: Manual Type”.

Compressor Assembly Removal and Installation

S7RW0A7226035

Refer to “Compressor Assembly Removal and Installation: Manual Type”.

Compressor Assembly Components

S7RW0A7226036

Refer to “Compressor Assembly Components: Manual Type”.

Magnet Clutch Removal and Installation

S7RW0A7226037

Refer to “Magnet Clutch Removal and Installation: Manual Type”.

Magnet Clutch Inspection

S7RW0A7226038

Refer to “Magnet Clutch Inspection: Manual Type”.

Thermal Switch Inspection

S7RW0A7226039

Refer to “Thermal Switch Inspection: Manual Type”.

Thermal Switch Removal and Installation

S7RW0A7226040

Refer to “Thermal Switch Removal and Installation: Manual Type”.

Relief Valve Inspection

S7RW0A7226041

Refer to “Relief Valve Inspection: Manual Type”.

Special Tools and Equipment

Recommended Service Material

S7RW0A7228001

NOTE

Required service material is also described in the following.
“HVAC Unit Components: Automatic Type”

Special Tool

S7RW0A7228002

SUZUKI scan tool — This kit includes following items. 1. Tech 2, 2. PCMCIA card, 3. DLC cable, 4. SAE 16/19 adapter, 5. Cigarette cable, 6. DLC loop back adapter, 7. Battery power cable, 8. RS232 cable, 9. RS232 adapter, 10. RS232 loop back connector, 11. Storage case, 12.☞ / ☞ 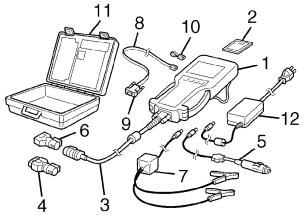	

Section 8

Restraint

CONTENTS

Precautions 8-1
- **Precautions 8-1**
  - Precautions on Restraint 8-1

Seat Belts 8A-1
- **Precautions 8A-1**
  - Precautions on Service and Diagnosis of Seat Belt 8A-1
- **General Description 8A-2**
  - Seat Belt Construction 8A-2
- **Diagnostic Information and Procedures 8A-4**
  - Repair and Inspection Required after Accident 8A-4
- **Repair Instructions 8A-5**
  - Front Seat Belt Components 8A-5
  - Front Seat Belt Removal and Installation 8A-6
  - Front Seat Belt Inspection 8A-7
  - Rear Seat Belt Components 8A-8
  - Rear Seat Belt Removal and Installation 8A-10
  - Rear Seat Belt Inspection 8A-10
- **Specifications 8A-10**
  - Tightening Torque Specifications 8A-10

Air Bag System 8B-1
- **Precautions 8B-1**
  - Precautions on Service and Diagnosis of Air Bag System 8B-1
  - Precautions on Handling and Storage of Air Bag System Components 8B-1
  - Precautions on Disposal of Air Bag and Seat Belt Pretensioner 8B-5
- **General Description 8B-5**
  - Air Bag System Construction 8B-5
  - Air Bag System Input / Output Table 8B-6
- **Schematic and Routing Diagram 8B-7**
  - Air Bag System Wiring Circuit Diagram 8B-7
  - Air Bag System Input / Output Diagram 8B-9
- **Component Location 8B-10**
  - Air Bag System Components, Wiring and Connectors Location 8B-10
- **Diagnostic Information and Procedures 8B-11**
  - Air Bag Diagnostic System Check 8B-11
  - Air Bag Diagnostic System Check Flow 8B-12
  - DTC Table 8B-13
  - DTC Check 8B-17
  - DTC Clearance 8B-17
  - Scan Tool Data 8B-17
  - “AIR BAG” Warning Light Comes ON Steady 8B-18
  - “AIR BAG” Warning Light Does Not Come ON 8B-21
  - Serial Data Link Circuit Check 8B-22
  - DTC B1013: SDM Internal Failure 8B-24
  - DTC B1014: “AIR BAG” Warning Light Circuit 8B-25
  - DTC B1016: Power Supply Voltage too High 8B-25
  - DTC B1017: Power Supply Voltage too Low 8B-26
  - DTC B1021: Front Air Bag Deployment Record 8B-27
  - DTC B1024 / B1025: Side Air-Bag Deployment Record 8B-28
  - DTC B1026: Seat Belt Pretensioner Activation Record 8B-28
  - DTC B1027: Number of Deployment Times Exceeded Limit 8B-29
  - DTC B1031: Driver Air Bag Circuit High Resistance 8B-30
  - DTC B1032: Driver Air Bag Circuit Low Resistance 8B-32
  - DTC B1033: Driver Air Bag Circuit Shorted to Ground 8B-34
  - DTC B1034: Driver Air Bag Circuit Shorted to Power Supply 8B-36
  - DTC B1041: Passenger Air Bag Circuit High Resistance 8B-39
  - DTC B1042: Passenger Air Bag Circuit Low Resistance 8B-42
  - DTC B1043: Passenger Air Bag Circuit Shorted to Ground 8B-44
  - DTC B1044: Passenger Air Bag Circuit Shorted to Power Supply 8B-45
  - DTC B1051 / B1055: Seat Belt Pretensioner Circuit High Resistance 8B-47
  - DTC B1052 / B1056: Seat Belt Pretensioner Circuit Low Resistance 8B-50
  - DTC B1053 / B1057: Seat Belt Pretensioner Shorted to Ground 8B-51
  - DTC B1054 / B1058: Seat Belt Pretensioner Circuit Shorted to Power Supply 8B-53
  - DTC B1061 / B1065: Side-Air Bag Circuit High Resistance 8B-54

DTC B1062 / B1066: Side-Air Bag Circuit Low Resistance 8B-58
DTC B1063 / B1067: Side-Air Bag Circuit Shorted to Ground 8B-60
DTC B1064 / B1068: Side-Air Bag Circuit Shorted to Power Supply 8B-63
DTC B1071: Driver Forward Impact-Sensor Communication Data Inconsistent 8B-65
DTC B1072: Driver Forward Impact-Sensor Communication Data Invalid 8B-65
DTC B1073: Driver Forward Impact-Sensor Circuit Shorted to Ground 8B-66
DTC B1074: Driver Forward Impact-Sensor Circuit Open 8B-67
DTC B1081 / B1091: Side Impact-Sensor No Response 8B-69
DTC B1082 / B1092: Side Impact-Sensor Communication DATA Invalid 8B-69
DTC B1083 / B1093: Side Impact-Sensor Circuit Shorted to Ground 8B-70
DTC B1084 / B1094: Side Impact-Sensor Circuit Open 8B-72
DTC B1085 / B1095: Side Impact-Sensor Communication DATA Inconsistent 8B-73
DTC B1361 / B1365: Curtain-Air Bag Circuit High Resistance 8B-74
DTC B1362 / B1366: Curtain-Air Bag Circuit Low Resistance 8B-78
DTC B1363 / B1367: Curtain-Air Bag Circuit Shorted to Ground 8B-81
DTC B1364 / B1368: Curtain-Air Bag Circuit Shorted to Power Supply 8B-83
SDM Power Supply and Ground Circuit Check 8B-85
Contact Coil Cable and Its Circuit Check 8B-87
Inspection of Intermittent and Poor Connections 8B-90
Repair and Inspection Required after Accident 8B-91
Repair Instructions 8B-94
Disabling Air Bag System 8B-94
Enabling Air Bag System 8B-95
SDM Removal and Installation 8B-95
SDM Inspection 8B-97
Driver Air Bag (Inflator) Module Removal and Installation 8B-97
Driver Air Bag (Inflator) Module Inspection 8B-98
Passenger Air Bag (Inflator) Module Removal and Installation 8B-98
Passenger Air Bag (Inflator) Module Inspection 8B-100
Side-Air Bag (Inflator) Module Removal and Installation 8B-101
Side-Air Bag (Inflator) Inspection 8B-103
Side Curtain-Air Bag (Inflator) Module Removal and Installation 8B-103
Side Curtain-Air Bag (Inflator) Module Inspection 8B-105
Forward Impact-Sensor Removal and Installation 8B-106
Forward Impact-Sensor Inspection 8B-107
Side Impact-Sensor Removal and Installation 8B-107
Side Impact-Sensor Inspection 8B-108
Passenger Air Bag (Inflator) Module Repair Harness Installation 8B-108
Air Bag (Inflator) Module and Seat Belt Pretensioner Disposal 8B-109
Deployed Air Bag (Inflator) Module and Activated Seat Belt Pretensioner Disposal 8B-120
Specifications 8B-121
Tightening Torque Specifications 8B-121
Special Tools and Equipment 8B-121
Use of Special Tools 8B-121
Special Tool 8B-123

Precautions

Precautions

Precautions on Restraint

S7RW0A8000001

Air Bag Warning
Refer to “Air Bag System Service Warning in Section 00”.

Fastener Caution
Refer to “Fastener Caution in Section 00”.

Precautions on Service and Diagnosis of Seat Belt
Refer to “Precautions on Service and Diagnosis of Seat Belt in Section 8A”.

Precautions on Service and Diagnosis of Air Bag System
Refer to “Precautions on Service and Diagnosis of Air Bag System in Section 8B”.

Precautions on Handling and Storage of Air Bag Components
Refer to “Precautions on Handling and Storage of Air Bag System Components in Section 8B”.

Precautions on Disposal of Air Bag and Seat Belt Pretensioner
Refer to “Precautions on Disposal of Air Bag and Seat Belt Pretensioner in Section 8B”.

Seat Belts

Precautions

Precautions on Service and Diagnosis of Seat Belt

S7RW0A8100001

⚠ WARNING

If replacing seat belt is necessary, replace buckle and seat belt together as a set. This is for the reason of ensuring locking of tongue plate with buckle. If these parts are replaced individually, such a locking condition may become unreliable. For this reason, SUZUKI will supply only the spare buckle and seat belt assembly in a set part.

Before servicing or replacing seat belts, refer to the following precautionary items.

- Seat belts should be normal relative to strap retractor and buckle portions.
- Keep sharp edges and damaging objects away from belts.
- Avoid bending or damaging any portion of belt buckle or latch plate.
- Do not bleach or dye belt webbing. (Use only mild soap and lukewarm water to clean it.)
- When installing a seat belt anchor bolt, it should be tightened by hand at first to prevent cross-threading and then to specified torque.
- Do not attempt any repairs on retractor mechanisms or retractor covers. Replace defective assemblies with new replacement parts.
- Keep belts dry and clean at all times.
- If there exist any parts in question, replace such parts.
- Replace belts whose webbing is cut or otherwise damaged.
- Do not put anything into trim panel opening which seat belt webbing passes through.

General Description

Seat Belt Construction

S7RW0A8101001

Hatchback Model

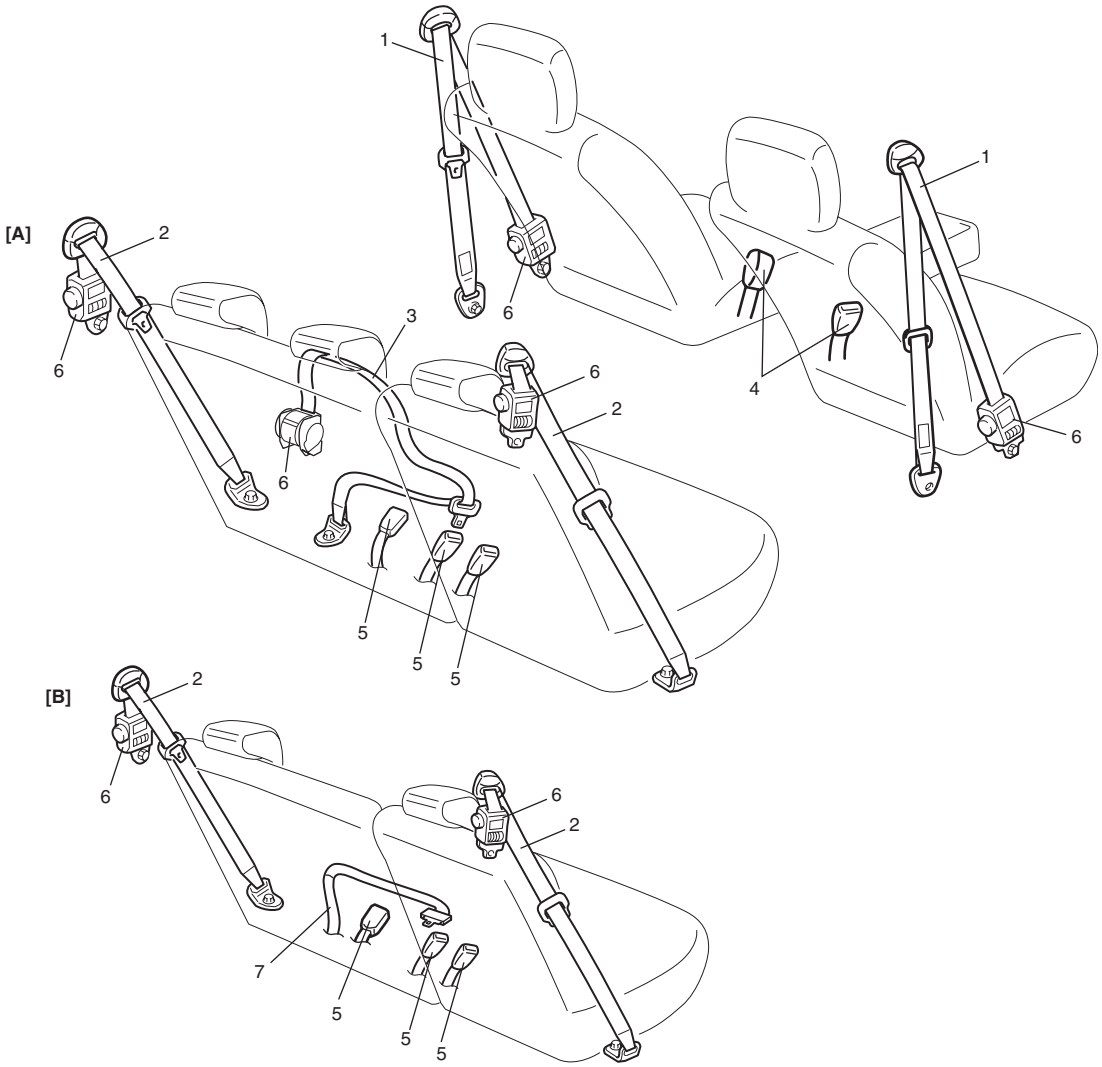

I6RW0C810001-01

Sedan Model

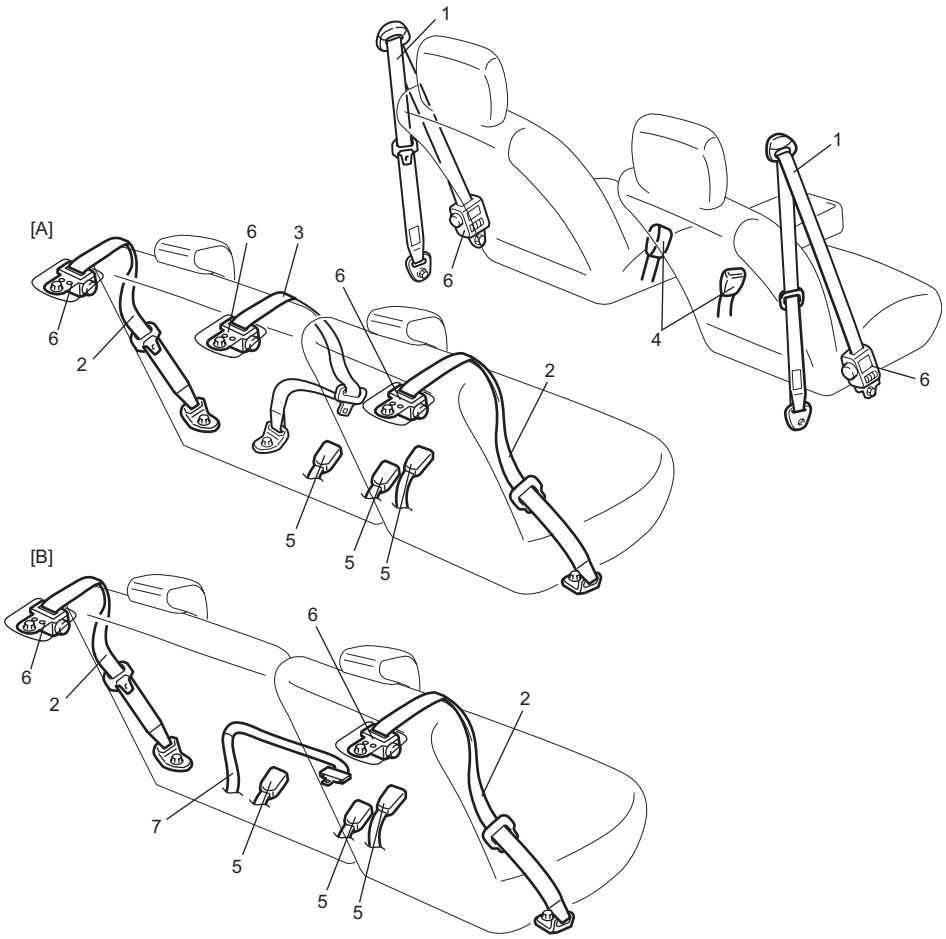

I7RW0A810001-01

[A]: A-ELR rear center seat belt model	2. Rear seat belt (with A-ELR or ELR)	5. Buckle for rear seat belt
[B]: Non-A-ELR rear center seat belt model	3. Rear center seat belt (with A-ELR or ELR)	6. Retractor
1. Front seat belt (with ELR and pretensioner)	4. Buckle for front seat belt	7. Rear center seat belt (without A-ELR or ELR)

Seat Belt with ELR
The seat belt with emergency locking retractor (ELR) is designed so that it locks immediately (to prevent the webbing from being pulled out of the retractor any further) when any of the following items is detected as exceeding each set value;

- Speed at which the webbing is pulled out of the retractor.
- Acceleration or deceleration of the vehicle speed.
- Inclination.

Seat Belt with A-ELR
The automatic and emergency locking retractor (A-ELR) works as an Emergency Locking Retractor (ELR) till its webbing is pulled all the way out and then on as an Automatic Locking Retractor (ALR) till it is retracted fully.
ALR: Automatically locks when the webbing is pulled out from the retractor and allowed to retract even a little. Then the webbing can not be pulled out any further, unless it is wound all the way back into the retractor, which releases the lock and allows the webbing to be pulled out.

Seat Belt with ELR and Pretensioner
The seat belt with ELR and a pretensioner has a pretensioner mechanism which operates in linkage with the air bag in addition to the described ELR.
The pretensioner is incorporated in retractor and controlled by SDM as one of air bag system components. It will be activated at the same time as the driver and passenger air bag module when an impact at the front of vehicle exceeds the specified value.
When servicing seat belt (retractor) with pretensioner, be sure to observe all WARNINGS and CAUTIONS and “Precautions on Service and Diagnosis of Air Bag System in Section 8B”.

⚠ CAUTION

Do not reuse the seat belt pretensioner (retractor) that has activated. Replace it with a new seat belt and buckle together as a set. For checking procedure of its activation, refer to “Repair and Inspection Required after Accident in Section 8B”.

Seat Belt Remainder
When driver’s seat belt is unfastened (under the following conditions), seat belt reminder light inform that driver’s seat belt is unfastened. Seat belt reminder light located in combination meter located inside BCM operate as follows:

- Seat belt reminder light comes on when driver’s seat belt is unfastened while ignition key switch is at ON position.

Diagnostic Information and Procedures

Repair and Inspection Required after Accident

S7RW0A8104001

After an accident, whether the seat belt pretensioner has been activated or not, be sure to perform checks and repairs described on “Repair and Inspection Required after Accident in Section 8B”.

Repair Instructions

Front Seat Belt Components

S7RW0A8106001

⚠ WARNING

- **Never attempt to disassemble or repair the seat belt pretensioner (retractor). If any abnormality is found, be sure to replace it with new one as an assembly.**
- **Be sure to read "Precautions on Service and Diagnosis of Seat Belt" before starting to work and observe every precaution during work. Neglecting them may result in personal injury or unactivation of the seat belt pretensioner when necessary.**

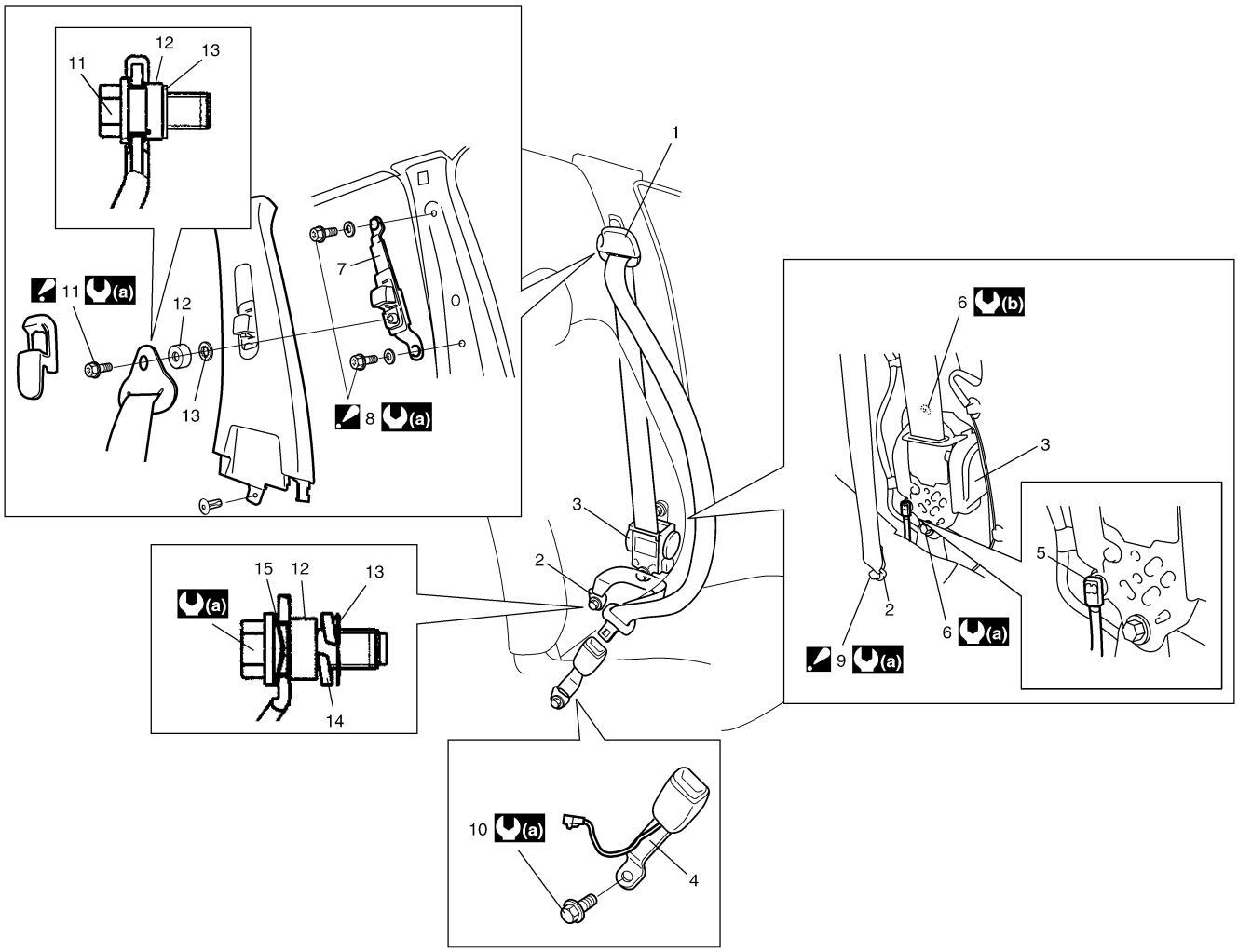

I7RW01810002-01

1. Sash guide	10. Buckle mounting bolt
2. Anchor plate	11. Sash guide bolt : Tighten sash guide bolt first, then tighten anchor bolt.
3. Retractor	12. Spacer
4. Buckle	13. Washer
5. Yellow connector (for seat belt pretensioner)	14. Spring washer
6. Retractor mounting bolt	15. Wave washer
7. Shoulder adjuster	(a) : 43 N·m (4.3 kgf-m, 31.5 lb-ft)
8. Shoulder adjuster bolt : Tighten upper bolt first, then tighten lower bolt.	(b) : 5.5 N·m (0.55 kgf-m, 4.0 lb-ft)
9. Anchor bolt : Tighten sash guide bolt first, then tighten anchor bolt.	

Front Seat Belt Removal and Installation

S7RW0A8106002

⚠ WARNING

- **Never attempt to disassemble or repair the retractor (seat belt pretensioner). If any abnormality is found, be sure to replace it with new one as an assembly.**
- **Be sure to read "Precautions on Service and Diagnosis of Seat Belt" before starting to work and observe every precaution during work. Neglecting them may result in personal injury or unactivation of the seat belt pretensioner when necessary.**

Removal

1) Disconnect negative (–) cable at battery.
2) Disable air bag system. Refer to "Disabling Air Bag System in Section 8B".
3) Remove center pillar lower trim.
4) Disconnect connector (1) from retractor (seat belt pretensioner) (2) as following steps.
   a) Unlock lock button (3) by pulling it.
   b) After unlocked, disconnect connector.

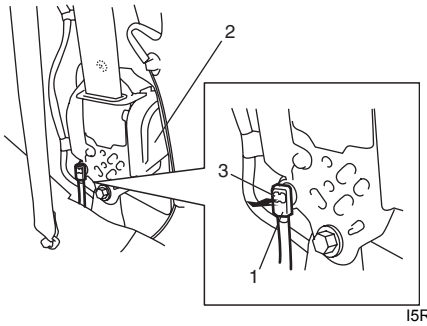

I5RW0A810002-02

5) Remove front seat belts from the vehicle.

Installation

Install in reverse order of removal, noting the following.

- Seat belt anchor bolts should have an unified fine thread (7/16-20 UNF). Under no circumstances should any different sized or metric screw threads be used.
- Connect seat belt pretensioner connector (1) to retractor (seat belt pretensioner) securely as following steps.
  a. Make sure that lock button (2) is unlock position.
  b. Insert connector to retractor (seat belt pretensioner) until it stops with unlocked lock button (2).
  c. Lock connector securely by showing in lock button (2).

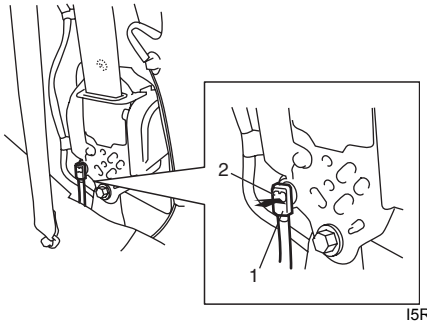

I5RW0A810003-03

- Enable air bag system. Refer to "Enabling Air Bag System in Section 8B".

Front Seat Belt Inspection

S7RW0A8106003

⚠ WARNING

- **Never attempt to disassemble or repair the seat belt pretensioner (retractor). If any abnormality is found, be sure to replace it with new one as an assembly.**
- **Be sure to read "Precautions on Service and Diagnosis of Seat Belt", before starting to work and observe every precaution during work. Neglecting them may result in personal injury or unactivation of the seat belt pretensioner when necessary.**
- **Never measure resistance of pretensioner or disassemble it. Otherwise, personal injury may result.**

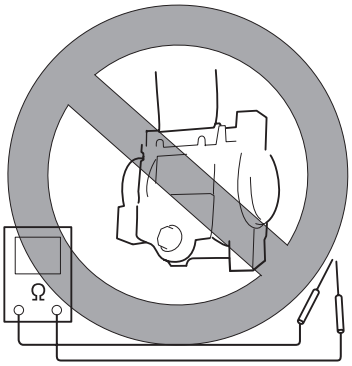

I2RH01810004-01

⚠ CAUTION

If seat belt pretensioner (retractor) was dropped from a height of 30 cm (1 ft) or more, it should be replaced.

Seat belts and attaching parts can affect the vital components and systems of a vehicle.
Therefore, they should be inspected carefully and replaced with genuine parts only.

Seat Belt

- The seat belt webbing or strap should be free from damage.

Retractor (with Seat Belt Pretensioner)

1) Let the seat belt retract fully to confirm its easy retraction.
   - The retractor should lock webbing when pulled quickly.
   - The front seat belt retractor (1) should pass the inspection and should lock webbing even when tilted (approx. 15°) toward the fore and aft or right and left directions.
2) Check retractor (1) with seat belt pretensioner appearance visually for following symptoms and if any one of them is applicable, replace it with a new one as an assembly.
   - Pretensioner has activated.
   - There is a crack in seat belt pretensioner (retractor).
   - Seat belt pretensioner (retractor) is damaged or a strong impact (e.g., dropping) was applied to it.

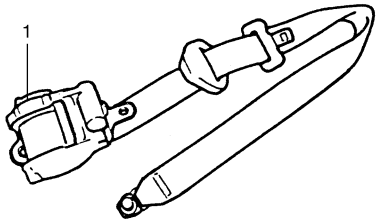

I2RH01810005-01

Anchor Bolt

- Anchor bolts should be torqued to specification.

Belt Latch

- It should be secure when latched.

Seat Belt Buckle Switch

Check driver side seat belt switch and passenger side seat belt switch for continuity by using ohmmeter.

<u>Seat belt switch specification</u>
Without inserted buckle tongue to buckle catch:
Terminal "A" and "B": Continuity
With inserted buckle tongue to buckle catch:
Terminal "A" and "B": No continuity

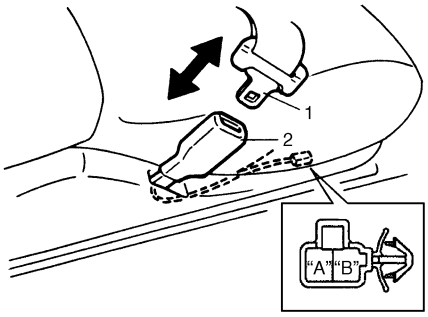

I4RS0B810001-01

1. Buckle tongue	2. Buckle catch

Rear Seat Belt Components

S7RW0A8106004

⚠ WARNING

Be sure to read “Precautions on Service and Diagnosis of Seat Belt” before starting to work and observe every precaution during work.

Hatchback Model

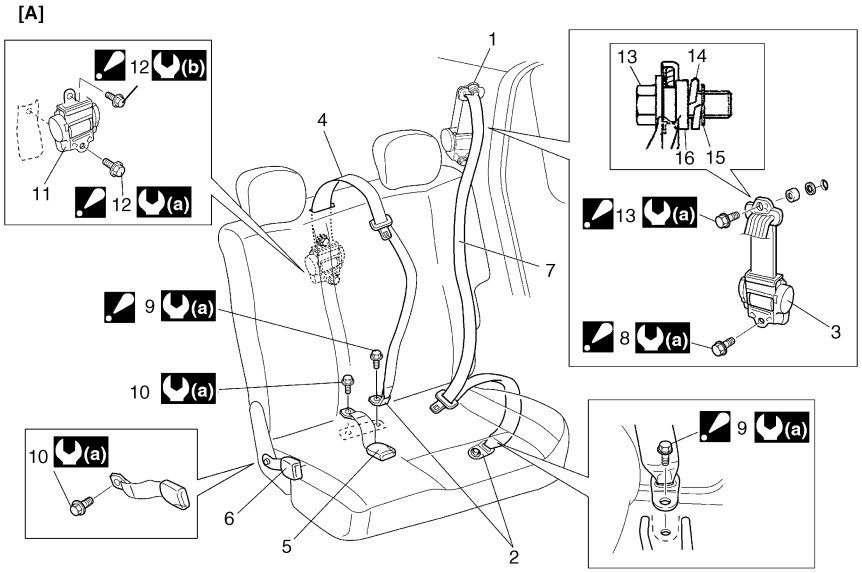

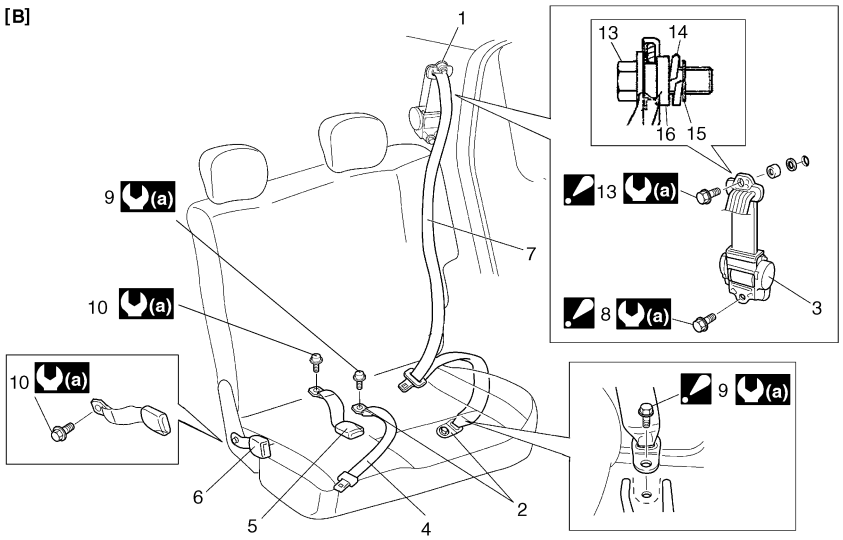

I6RW0C810002-01

Sedan Model

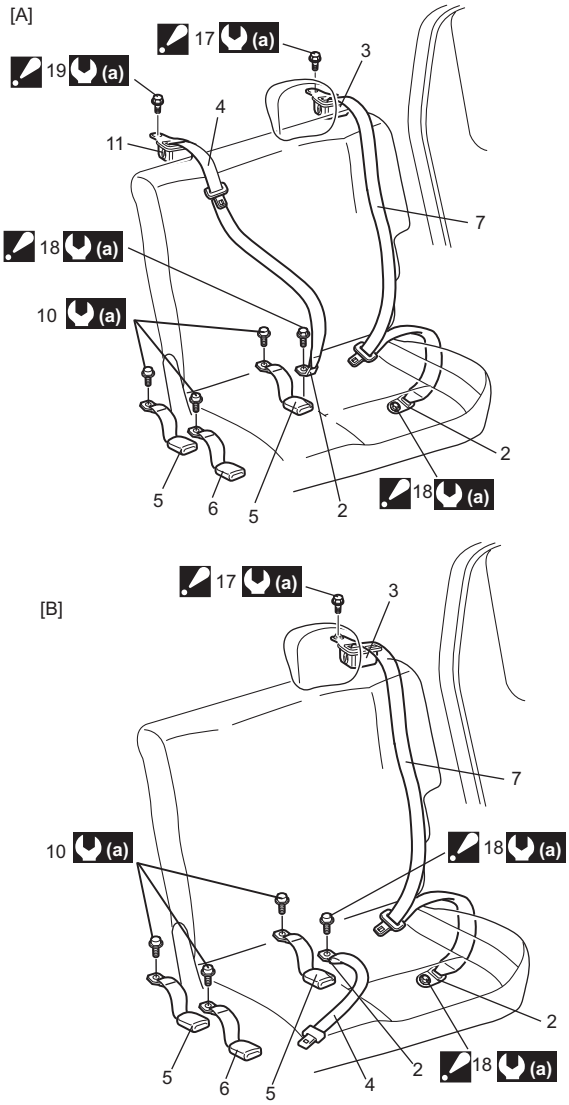

I7RW0A810002-01

[A]: A-ELR rear center seat belt model	11. Center retractor
[B]: Non-A-ELR rear center seat belt model	12. Center retractor mounting bolt (hatchback model) : Tighten lower bolt first, then tighten upper bolt.
1. Sash guide	13. Sash guide bolt (hatchback model) : Tighten sash guide bolt first, then tighten side retractor mounting bolt.
2. Anchor plate	14. Spring washer
3. Side retractor	15. Washer
4. Center seat belt	16. Spacer
5. Buckle for seat belt	17. Side retractor mounting bolt (sedan model) : Tighten side retractor mounting bolt first, then Tighten anchor bolt.
6. Buckle for center seat belt	18. Anchor bolt (sedan model) : Tighten side retractor mounting bolt first, then Tighten anchor bolt.
7. Seat belt	19. Center retractor mounting bolt (sedan model) : Tighten center retractor mounting bolt first, then Tighten anchor bolt.
8. Side retractor mounting bolt (hatchback model) : Tighten sash guide bolt first, then tighten side retractor mounting bolt.	(a) : 43 N·m (4.3 kgf-m, 31.5 lb-ft)
9. Anchor bolt (hatchback model) : Tighten retractor mounting bolts and sash guide bolt first, then tighten anchor bolt.	(b) : 5.5 N·m (0.55 kgf-m, 4.0 lb-ft)
10. Buckle bolt	

Rear Seat Belt Removal and Installation

S7RW0A8106005

⚠ WARNING

Be sure to read "Precautions on Service and Diagnosis of Seat Belt" before starting to work and observe every precaution during work.

Removal

1) Fold rear seats referring to "Folding Rear Seats" in Owners Manual (hatchback model).
2) Remove rear side sill scuff (1), quarter lower trim (2) and quarter upper trim (3).

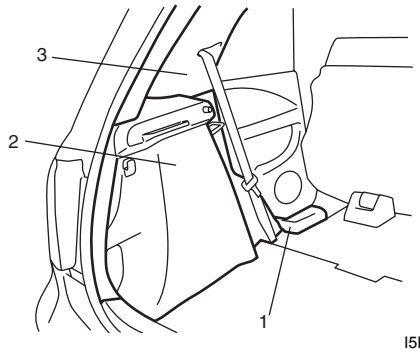

I5RW0A810005-01

3) Remove partition trim referring to "Trunk Lid Removal and Installation (Sedan Model) in Section 9J".
4) Remove rear seat belt referring to "Rear Seat Belt Components".

Installation

Reverse removal procedure for installation noting the following.

- Seat belt anchor bolts should have an unified fine thread (7/16-20 UNF). Under no circumstances should any different sized or metric screw threads be used.

Rear Seat Belt Inspection

S7RW0A8106006

⚠ WARNING

Be sure to read "Precautions on Service and Diagnosis of Seat Belt" before starting to work and observe every precaution during work.

- Check the rear seat belt in the same way as "Front Seat Belt Inspection".
- As to seat belts with A-ELR, check them as follows.
  - With vehicle at stop, pull seat belt all the way out, let it retract a little and try to pull it. It should not be pulled out, that is, it should be locked where retracted.
  - Let seat belt retract to its original state. Next, pull it half way out, let it retract a little and try to pull it again. It should be pulled out smoothly, that is it should not be locked at this time.

Specifications

Tightening Torque Specifications

S7RW0A8107001

NOTE

The specified tightening torque is also described in the following.
"Front Seat Belt Components"
"Rear Seat Belt Components"

Reference:
For the tightening torque of fastener not specified in this section, refer to "Fasteners Information in Section 0A".

Air Bag System

Precautions

Precautions on Service and Diagnosis of Air Bag System

S7RW0A8200001

⚠ WARNING

- **If the air bag system and another vehicle system both need repair, SUZUKI recommends that the air bag system be repaired first, to help avoid unintended air bag system activation.**
- **Do not modify the steering wheel, dashboard, both front seat or any other on or around air bag system components. Modifications can adversely affect air bag system performance and lead to injury.**
- **Be sure to follow the procedures described in this section. Failure to follow procedures could result in possible air bag system activation, personal injury or unneeded air bag system repairs.**

- WARNING / CAUTION labels are attached on each part of air bag system components (SDM, air bag (inflator) modules and seat belt pretensioners). Be sure to follow the instructions.
- Many of service procedures require disconnection of “A/B” fuse and air bag (inflator) module(s) (driver module, passenger module, side modules and curtain modules) from initiator circuit to avoid an accidental deployment.
- Do not apply power to the air bag system unless all components are connected or a diagnostic flow requests it, as this will set a DTC.
- The “Air Bag Diagnostic System Check” must be the starting point of any air bag diagnostics. The “Air Bag Diagnostic System Check” will verify proper “AIR BAG” warning light operation and will lead you to the correct flow to diagnose any air bag malfunctions. Bypassing these procedures may result in extended diagnostic time, incorrect diagnosis, and incorrect parts replacements.
- Never use air bag component parts from another vehicle.
- If the vehicle will be exposed to temperatures over 93 °C (200 °F) (for example, during a paint baking process), remove the air bag system components beforehand to avoid component damage or unintended system activation.
- When handling the air bag (inflator) modules (driver module, passenger module, side modules and curtain modules), seat belt pretensioners (driver module and passenger module), SDM, forward impact-sensor or side impact-sensor be careful not to drop it or apply an impact to it. If an excessive impact was applied (e.g., SDM, forward impact-sensor are dropped, air bag (inflator) module is dropped from a height of 90 cm (3 ft) or more, seat belt pretensioner (retractor assembly) is dropped from a height of 30 cm (1 ft) or more), never attempt disassembly or repair but replace it with a new one.
- When using electric welding, be sure to disconnect air bag (inflator) module connectors (driver module, passenger module, side modules and curtain modules) and seat belt pretensioner connectors (driver module and passenger module) respectively.
- When applying paint around the air bag system related parts, use care so that the harness or connector will not be exposed to the paint mist.
- Never expose air bag system component parts directly to hot air (drying or baking the vehicle after painting) or flames.

⚠ WARNING

When performing service on or around air bag system components or air bag wiring, follow the procedures listed in “Disabling Air Bag System” to temporarily disable the air bag system.
Failure to follow procedures could result in possible air bag system activation, personal injury or unneeded air bag system repairs.

Precautions on Handling and Storage of Air Bag System Components

S7RW0A8200002

SDM

⚠ WARNING

Never power up air bag system when SDM is not rigidly attached to the vehicle. Otherwise, personal injury may result.

⚠ CAUTION

After detecting one time of such collision as to meet deployment conditions, SDM must not be used. Refer to “Air Bag Diagnostic System Check” when checking SDM.

- Never attempt disassembly of SDM.
- When storing SDM, select a place where neither high temperature nor high humidity is anticipated and oil, water and dust are kept off.

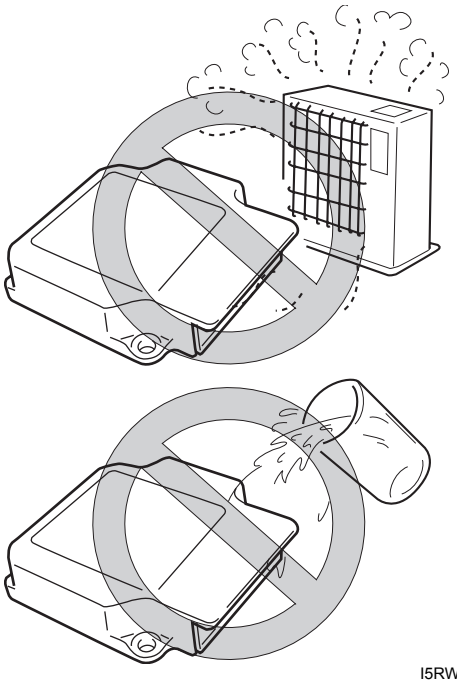

I5RW0A820001-03

- If SDM has been dropped, replace it with a new one.
- If SDM installation part of floor was damaged, repair that part completely before reinstallation.
- All SDM and mounting bracket fasteners must be carefully torqued and the arrow must be pointed toward the front of the vehicle to ensure proper operation of the air bag system.

Live (Undeployed) Air Bag (Inflator) Modules
Special care is necessary when handling and storing a live (undeployed) air bag (inflator) modules.
The rapid gas generation produced during deployment of the air bag could cause the air bag (inflator) module, or an object in front of the air bag (inflator) module, to be thrown through the air in the unlikely event of an accidental deployment.

⚠ WARNING

Never attempt to measure the resistance of the air bag (inflator) modules (driver module, passenger module and side modules and curtain modules). It is very dangerous as the electric current from the tester may deploy the air bag.

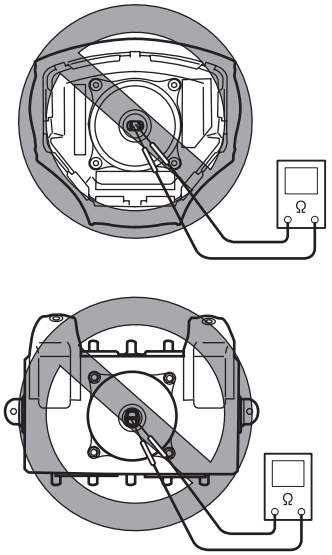

I7RW01821001-01

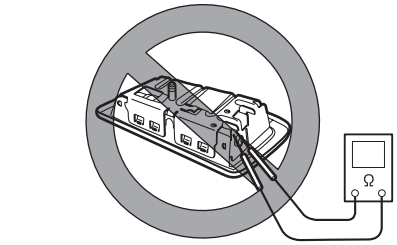

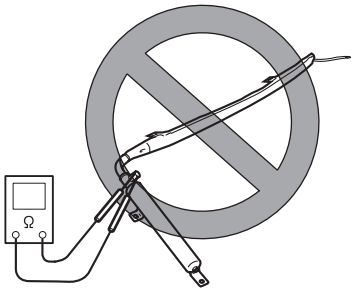

I6RW0B820001-01

- Never attempt disassembly of the air bag (inflator) modules.
- If any abnormality is found, be sure to replace it with new one as an assembly.
- When an abnormality is noted as existing in the live (undeployed) air bag (inflator) module, be sure to deploy it before discarding it.
- When grease, cleaning agent, oil, water, etc., got on the air bag (inflator) modules (driver and passenger), wipe it off immediately with a dry cloth.
- If air bag (inflator) module was dropped from a height of 90 cm (3 ft) or more, it should be replaced with a new one as an assembly.

⚠ WARNING

- **For handling and storage of a live air bag (inflator) module, select a place where the ambient temperature below 65 °C (150 °F), without high humidity and away from electric noise.**
- **When carrying a live air bag (inflator) module, make sure the bag opening is pointed away from you. In case of an accidental deployment, the bag will then deploy with minimal chance of injury. Never carry the air bag (inflator) module by the wires or connector on the underside of the module.**

Otherwise, personal injury may result.

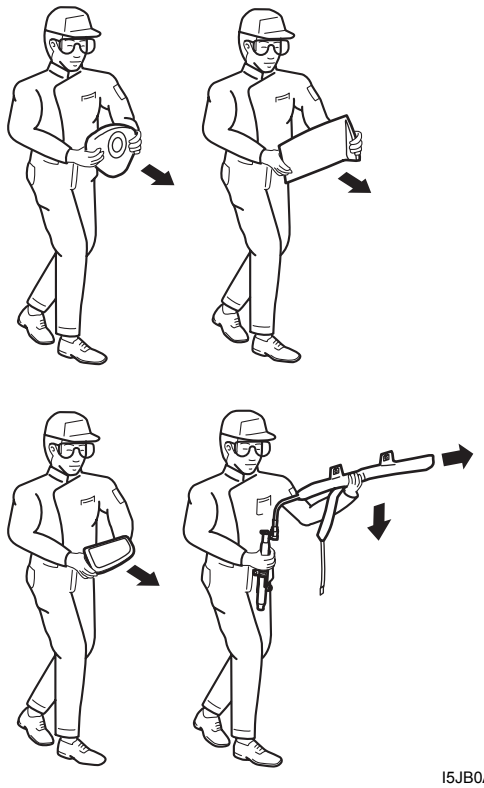

I5JB0A820003-01

⚠ WARNING

When leaving or storing live air bag (inflator) module unattended on bench or other surface, always its bag (trim cover) facing up and away from surface.
It is also prohibited to place anything on top of the trim cover and stack air bag (inflator) modules.
This is necessary so that a free space is provided to allow the air bag to expand in the unlikely event of accidental deployment.
Otherwise, personal injury may result.

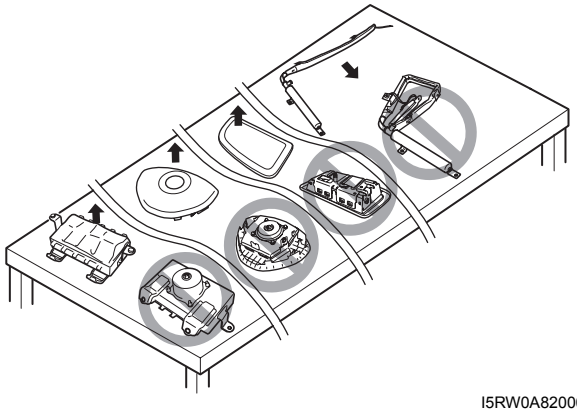

I5RW0A820004-03

Live (Inactivated) Seat Belt Pretensioner
Special care is necessary when handling and storing a live (inactivated) seat belt pretensioners.
Also, when the seat belt pretensioners activate, gas is generated and the seat belt (1) is retracted into the retractor assembly (2) quickly.
Note, therefore, that if they activate accidentally, the seat belt pretensioners and other object(s) around them may be thrown through the air.

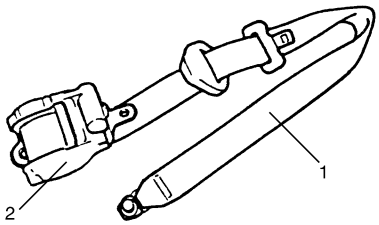

I3JA01820043-01

⚠ WARNING

Never attempt to measure the resistance of the seat belt pretensioners. It is very dangerous as the electric current from the tester may activate pretensioner.

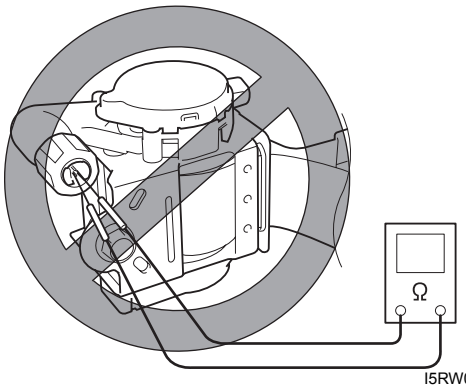

I5RW0A820005-03

- Never attempt to disassemble the seat belt pretensioners (retractor assembly).
- If any abnormality is found, be sure to replace it with new one as an assembly.
- When an abnormality is noted as existing in the live (inactivated) seat belt pretensioner, be sure to activate it before discarding it.
- When grease, cleaning agent oil, water, etc., got on the seat belt pretensioners (retractor assembly), wipe it off immediately with a dry cloth.
- If seat belt pretensioner was dropped from a height of 30 cm (1 ft) or more, it should be replaced with a new one as an assembly.

⚠ WARNING

- **For handling and storage of a live seat belt pretensioner, select a place where the ambient temperature below 65 °C (150 °F), without high humidity and away from electric noise.**
- **Never carry the seat belt pretensioner by webbing.**
- **When placing a live seat belt pretensioner on the workbench or other surface, be sure not to lay it with its exhaust hole (1) provided side facing down. It is also prohibited to put something on its face with an exhaust hole (1) or to put a seat belt pretensioner on top of another.**

Otherwise, personal injury may result.

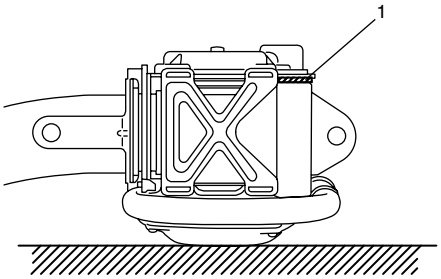

I2RH01820048-01

Deployed Air Bag (Inflator) Module and Activated Seat Belt Pretensioner

⚠ WARNING

- **The air bag (inflator) module and seat belt pretensioner immediately after deployment/activation is very hot. Wait for at least 30 minutes to cool it off before proceeding the work.**
- **Do not apply water, oil, etc. to deployed air bag (inflator) module and to activate seat belt pretensioner.**
- **After an air bag (inflator) module has been deployed, the surface of the air bag may contain a powdery residue. This powder consists primarily of cornstarch (used to lubricate the bag as it inflates) and by-products of the chemical reaction. As with many service procedures, gloves and safety glasses should be worn.**
- **Wash your hands with mild soap and water after completing the work.**

Refer to the procedure described under “Deployed Air Bag (Inflator) Module and Activated Seat Belt Pretensioner Disposal” for disposal.

Air Bag Wire Harness and Connector

Air bag wire harness is included in main harness (1), instrument panel harness (4), floor harness (3), seat harness (5) and curtain air bag harness (6) (hatchback model). Air bag wire harness can be identified easily as the part of connector side wire harness is covered with a yellow protection tube. Be very careful when handling it.

- When an open in air bag wire harness, damaged wire harness, connector or terminal is found, replace wire harness, connectors and terminals as an assembly.
- When installing it, be careful so that the air bag wire harness is not caught or does not interfere with other parts.
- Make sure air bag system grounding point (2) is clean and ground is securely fastened for optimum metal-to-metal contact. Poor grounding can cause intermittent problems that are difficult to diagnose.

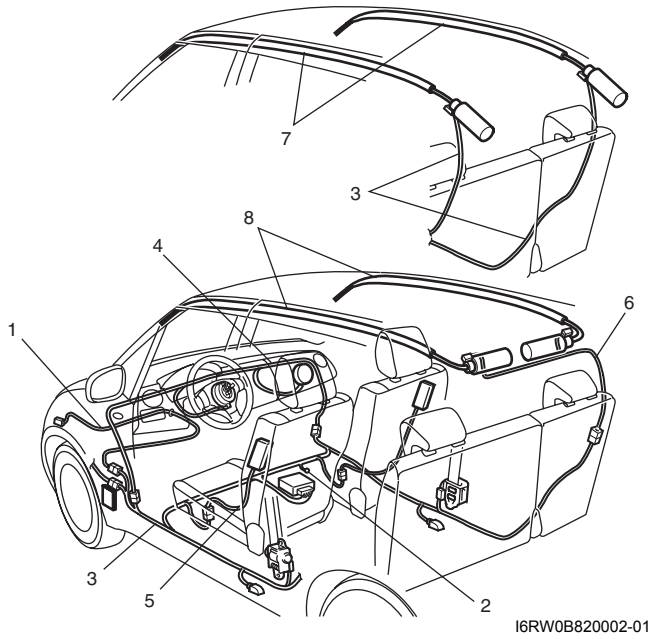

7.	Side curtain-air bag (inflator) module (sedan model)
8.	Side curtain-air bag (inflator) module (hatchback model)

Precautions on Disposal of Air Bag and Seat Belt Pretensioner

S7RW0A8200003

Do not dispose of the live (undeployed) air bag (inflator) modules and the live (inactivated) seat belt pretensioners.
When disposal is necessary, be sure to deploy / activate the air bag and seat belt pretensioner according to deployment / activation procedure described in “Air Bag (Inflator) Module and Seat Belt Pretensioner Disposal”.

⚠ WARNING

Failure to follow proper air bag (inflator) module and seat belt pretensioner disposal procedures can result in air bag deployment and pretensioner activation which could cause personal injury. Undeployed air bag (inflator) module and inactivated seat belt pretensioner must not be disposed of through normal refuse channels.
The undeployed air bag (inflator) module and inactivated seat belt pretensioner contain substances that can cause severe illness or personal injury if the sealed container is damaged during disposal.

General Description

Air Bag System Construction

S7RW0A8201001

There are two types of air bag system in this model depending on vehicle specification.
One is 4-channel air bag system and other is 8-channel air bag system.
4-channel air bag system consists of the following parts.

- Driver and passenger air bag (inflator) modules
- Driver and passenger seat belt pretensioners
- Forward impact-sensor
- SDM

8-channel air bag system consists of the following component.

- Driver and passenger air bag (inflator) modules
- Driver and passenger seat belt pretensioners
- Driver and passenger side-air bag (inflator) modules
- Driver and passenger side curtain-air bag (inflator) modules
- Forward impact-sensor
- Driver and passenger side impact-sensors
- SDM

With the air bag system which includes front air bags for both the driver’s and passenger’s sides as well as the seat belt pretensioners, the sag of the seat belt is taken up (for seat belt with pretensioner), the driver air bag (inflator) module is deployed from the center of the steering column and the passenger air bag (inflator) module from the top of the instrument panel in front of the front passenger seat in occurrence of a front collision with an impact larger than a certain set value to supplement protection offered by the driver and front passenger seat belts.
In addition, with the air bag system which includes side-air bags and side curtain-air bags for both the driver’s and passenger’s side (8-channel system).
Side-air bag (inflator) module is deployed from the side of the seat back in occurrence of a sideward collision with an impact larger than a certain set value.
Side curtain-air bag (inflator) module is deployed from the roof side in occurrence of a sideward collision with an impact larger than a certain set value.
For details of air bag system input / output, refer to “Air Bag System Input / Output Table”.

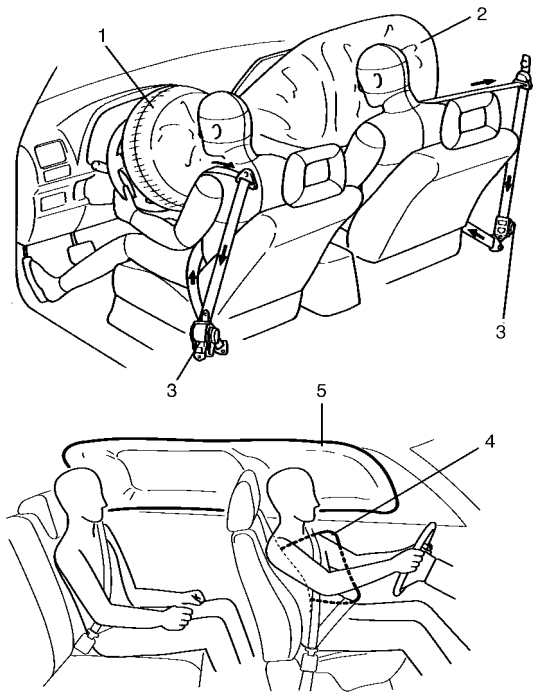

I4RS0B820002-02

1. Driver air bag	4. Side-air bag
2. Passenger air bag	5. Side curtain-air bag
3. Seat belt pretensioner	

The air bag system is designed to activate only in severe frontal “a” and sideward “b” collisions. It is not designed to activate in rear impacts, rollovers, or minor frontal and sideward collisions, since it would offer no protection in those types of accidents.

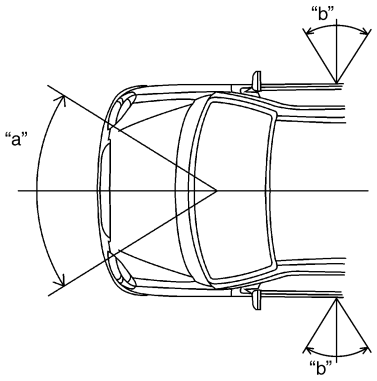

I6RW0C820019-01

Air Bag System Input / Output Table

S7RW0A8201003

OUTPUT (deployment & activation device) / INPUT (sensor signal)	Driver & Passenger air bag inflator modules	Driver & Passenger seat belt pretentioners	Driver side-air bag & driver side curtain-air bag inflator modules	Passenger side-air bag & passenger side curtain-air bag inflator modules
X-Y G sensor (longitudinal / lateral acceleration) in SDM	○	○	○	○
Mecanical longitudinal G sensor in SDM	○	○	—	—
Forward impact-sensor	○	○	—	—
Driver side impact-sensor	—	—	○	—
Passenger side impact-sensor	—	—	—	○

I7RW0A820009-02

Schematic and Routing Diagram

Air Bag System Wiring Circuit Diagram

S7RW0A8202001

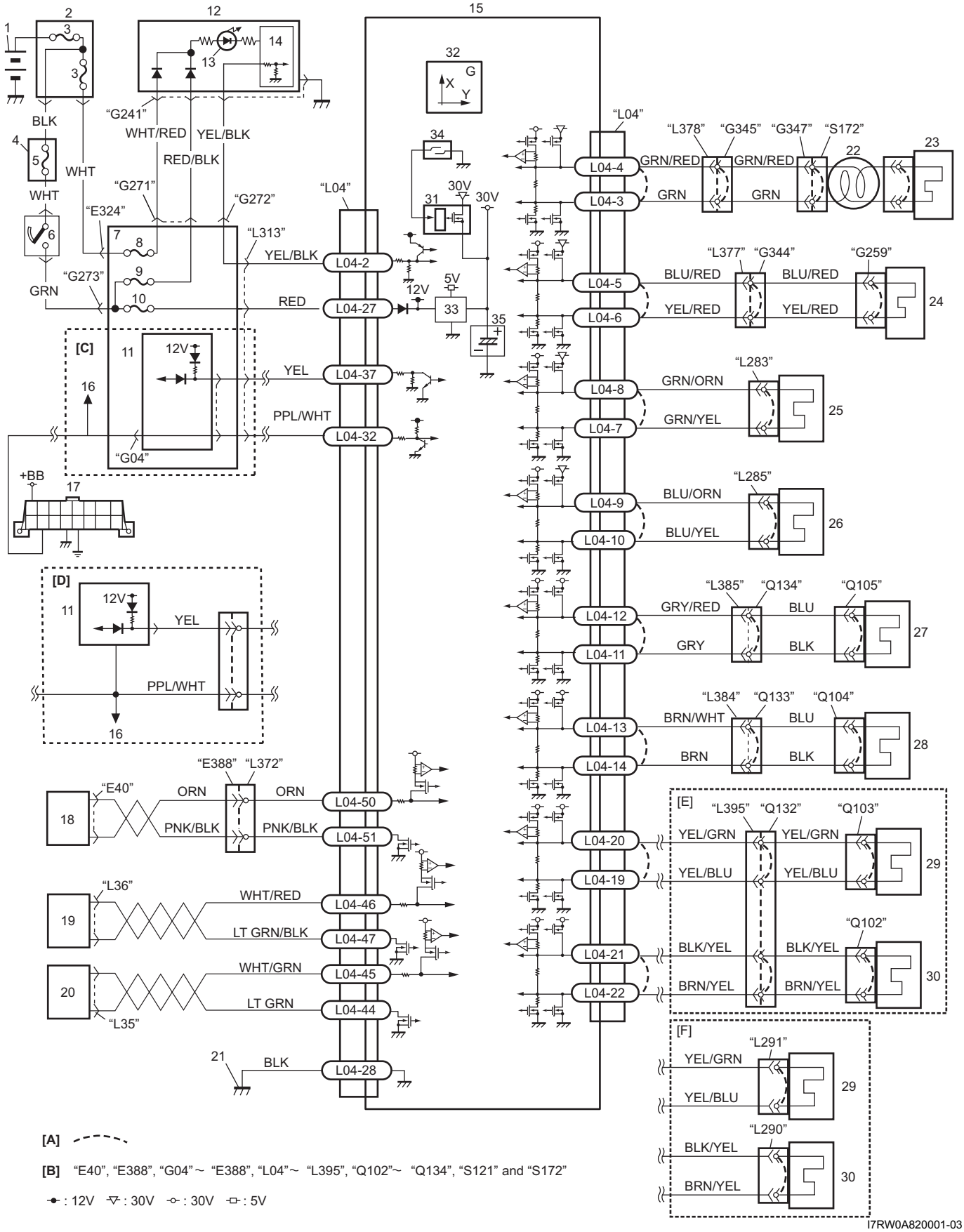

I7RW0A820001-03

[A]: Shorting bar	9. “METER” fuse	23. Driver air bag (inflator) module
[B]: Connector	10. “A/B” fuse	24. Passenger air bag (inflator) module
[C]: Junction block with BCM model	11. BCM	25. Driver seat belt pretensioner
[D]: Junction block without BCM model	12. Combination meter	26. Passenger seat belt pretensioner
[E]: Hatchback model	13. “AIR BAG” warning light	27. Driver side-air bag (inflator) module (8-channel system)
[F]: Sedan model	14. Light driver	28. Passenger side-air bag (inflator) module (8-channel system)
1. Battery	15. SDM	29. Driver side curtain-air bag (inflator) module (8-channel system)
2. Main fuse box	16. To HVAC control module (auto A/C model)	30. Passenger side curtain-air bag (inflator) module (8-channel system)
3. Fuse	17. Data link connector (DLC)	31. Safing power driver
4. Individual circuit fuse box No.1	18. Forward impact-sensor	32. X-Y-G (longitudinal / lateral acceleration)
5. “IGN” fuse box	19. Driver side impact-sensor (8-channel system)	33. DC / DC converter
6. Ignition switch	20. Passenger side impact-sensor (8-channel system)	34. Mechanical longitudinal G sensor (switch)
7. Junction block assembly	21. Ground for air bag system	35. Back up capacitor
8. “DOME” fuse	22. Contact coil assembly	

Terminal arrangement of SDM (viewed from harness side)

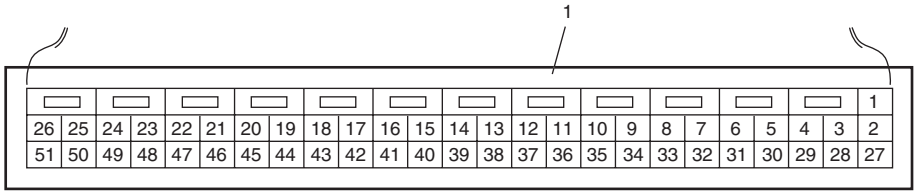

I7RW01822003-02

1. SDM Connector “L04”

Connector “L04” (SDM connector)

Terminal	Circuit	Terminal	Circuit
L04-1	—	L04-27	Ignition switch (power source)
L04-2	“AIR BAG” warning light	L04-28	Ground
L04-3	Driver air bag (–)	L04-29	—
L04-4	Driver air bag (+)	L04-30	—
L04-5	Passenger air bag (+)	L04-31	—
L04-6	Passenger air bag (–)	L04-32	DLC
L04-7	Driver seat belt pretensioner (–)	L04-33	—
L04-8	Driver seat belt pretensioner (+)	L04-34	—
L04-9	Passenger seat belt pretensioner (+)	L04-35	—
L04-10	Passenger seat belt pretensioner (–)	L04-36	—
L04-11	Driver side-air bag (–) (8-channel system)	L04-37	BCM communication line (air bag deployment signal)
L04-12	Driver side-air bag (+) (8-channel system)	L04-38	—
L04-13	Passenger side-air bag (+) (8-channel system)	L04-39	—
L04-14	Passenger side-air bag (–) (8-channel system)	L04-40	—
L04-15	—	L04-41	—
L04-16	—	L04-42	—
L04-17	—	L04-43	—
L04-18	—	L04-44	Passenger side impact-sensor (–) (8-channel system)
L04-19	Driver side curtain-air bag (–) (8-channel system)	L04-45	Passenger side impact-sensor (+) (8-channel system)
L04-20	Driver side curtain-air bag (+) (8-channel system)	L04-46	Driver side impact-sensor (+) (8-channel system)
L04-21	Passenger side curtain-air bag (+) (8-channel system)	L04-47	Driver side impact-sensor (–) (8-channel system)

Terminal	Circuit	Terminal	Circuit
L04-22	Passenger side curtain-air bag (–) (8-channel system)	L04-48	—
L04-23	—	L04-49	—
L04-24	—	L04-50	Forward impact-sensor (+)
L04-25	—	L04-51	Forward impact-sensor (–)
L04-26	—		

Air Bag System Input / Output Diagram

S7RW0A8202002

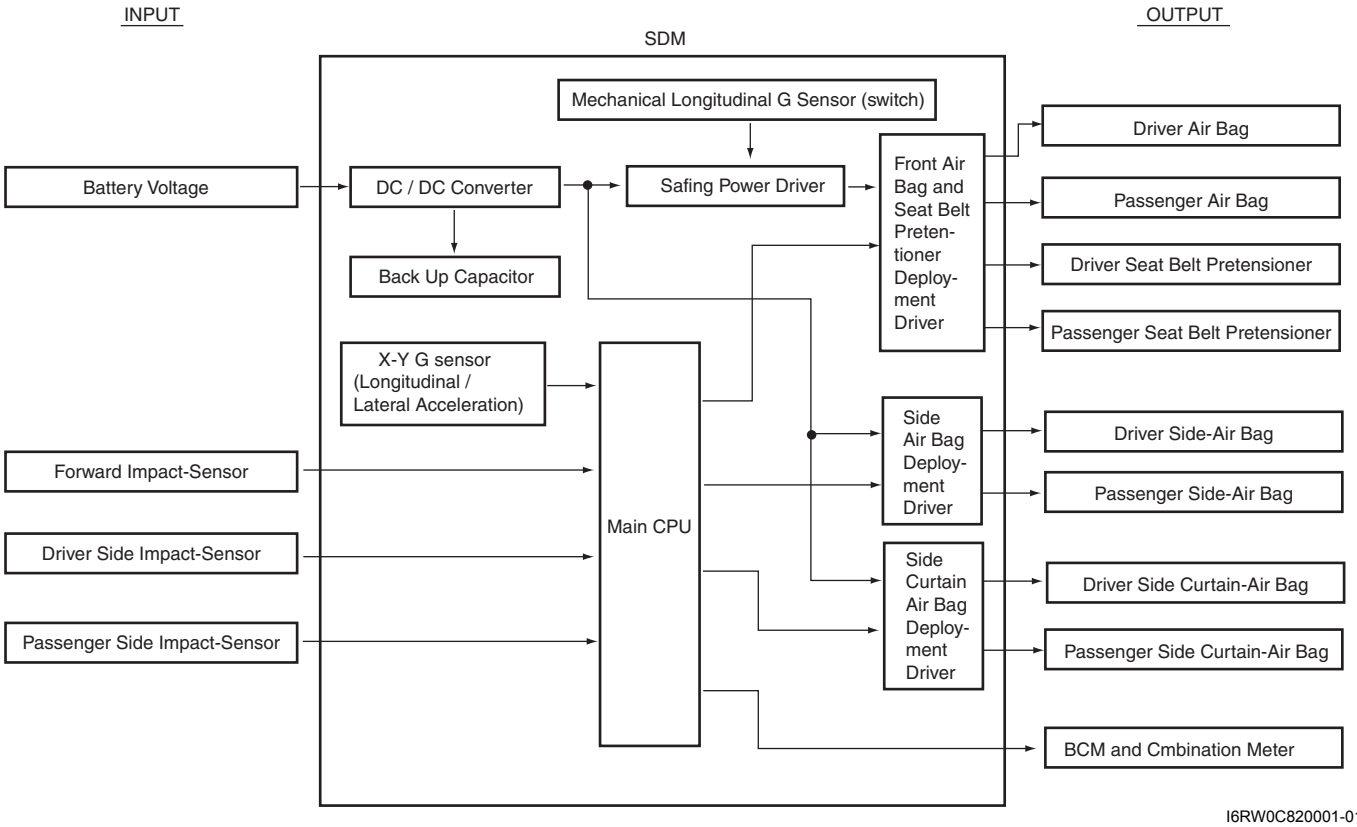

I6RW0C820001-01

Component Location

Air Bag System Components, Wiring and Connectors Location

S7RW0A8203001

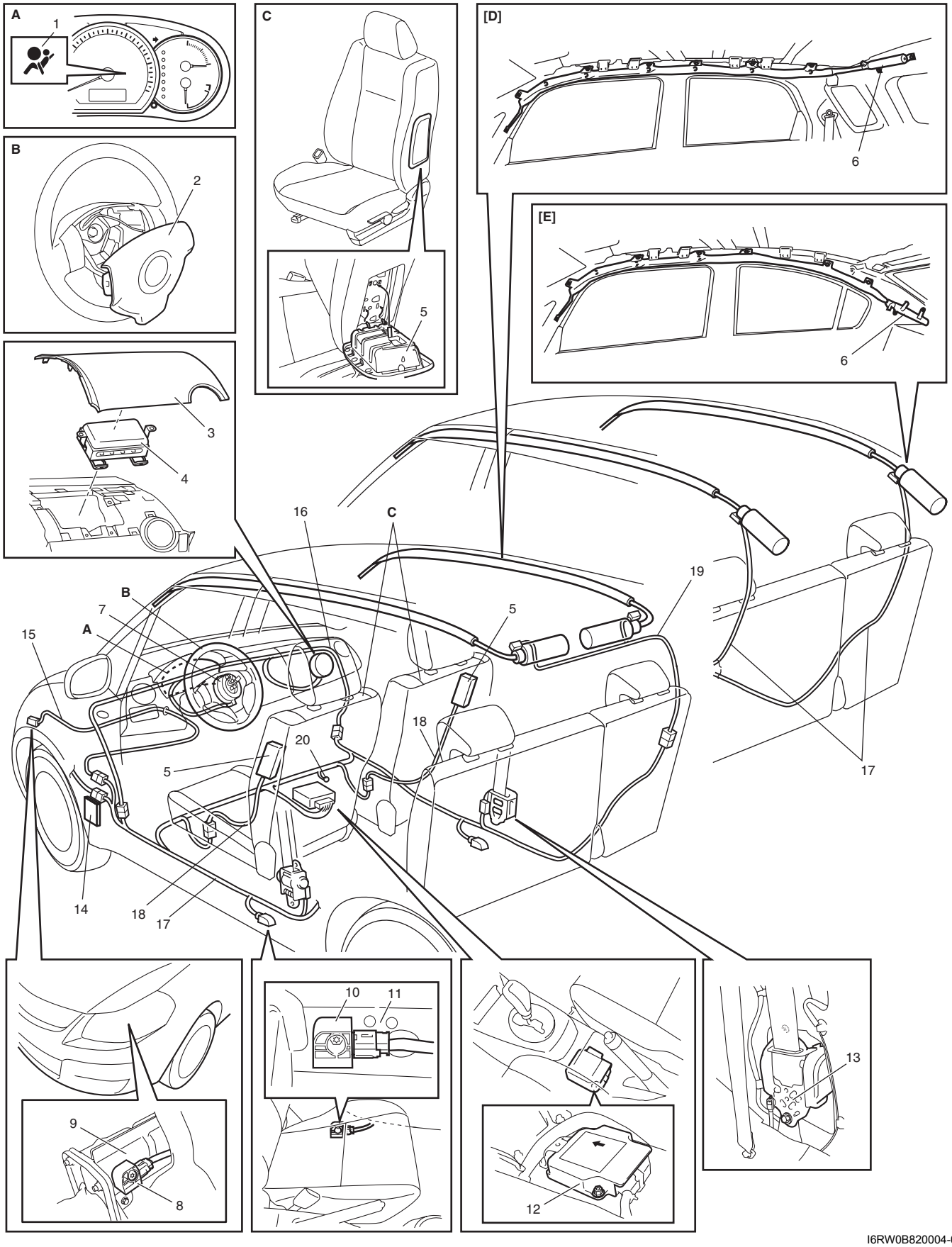

I6RW0B820004-02

A: Combination meter	5. Side-air bag (inflator) module (8-channel system)	14. “A/B” fuse in junction block assembly
B: Steering wheel	6. Side curtain-air bag (inflator) module (8-channel system)	15. Air bag harness in main harness
C: Seat	7. Contact coil assembly	16. Air bag harness in instrument panel harness
[D]: Hatchback model	8. Forward impact-sensor	17. Air bag harness in floor harness
[E]: Sedan model	9. Apron-side-member (driver side)	18. Side-air bag harness (8-channel system)
1. “AIR BAG” warning light	10. Side impact-sensor (8-channel system)	19. Side curtain-air bag harness (8-channel system)
2. Driver air bag (inflator) module	11. Side sill inner panel	20. Ground for air bag system
3. Passenger air bag facing cover	12. SDM	
4. Passenger air bag (inflator) module	13. Seat belt pretensioner	

Diagnostic Information and Procedures

Air Bag Diagnostic System Check

S7RW0A8204001

⚠ WARNING

To avoid deployment when troubleshooting the air bag system, do not use electrical test equipment such as a battery powered or AC powered voltmeter, ohmmeter, etc., or any type of electrical equipment other than that specified in this manual. Do not use a non-powered probe type tester.
Instructions in this manual must be followed carefully, otherwise personal injury may result.

⚠ CAUTION

- **The order in which DTCs are diagnosed is very important. Failure to diagnose the DTCs in the order specified may result in extended diagnostic time, incorrect diagnosis and incorrect parts replacement.**
- **When measurement of resistance or voltage is required in the flow, use a tester along with a correct terminal adapter from special tool (Connector test adapter kit).**
- **When a check for proper connection is required, refer to “Inspection of Intermittent and Poor Connections”.**
- **If an open circuit in the air bag wire harness damaged, connector or terminal is found, replace the wire harness, connectors and terminals as an assembly.**

The diagnostic procedures used are designed to find and repair air bag system malfunctions.
To get the best results, it is important to use the diagnostic flow and follow the sequence in the following.

1) Perform the “Air Bag Diagnostic System Check Flow”.
   (The “Air Bag Diagnostic System Check Flow” must be the starting point of any air bag system diagnosis. The “Air Bag Diagnostic System Check Flow” checks for proper “AIR BAG” warning light operation through “AIR BAG” warning light and whether air bag DTCs exist.)
2) Refer to the proper diagnostic flow as directed by the “Air Bag Diagnostic System Check Flow”.
   (The “Air Bag Diagnostic System Check Flow” will lead you to the correct flow to diagnose any air bag system malfunctions. Bypassing these procedures may result in extended diagnostic time, incorrect diagnosis and incorrect parts replacement.)
3) Repeat the “Air Bag Diagnostic System Check Flow” after any repair or diagnostic procedures have been performed.
   (Performing the “Air Bag Diagnostic System Check Flow” after all repair or diagnostic procedures will ensure that the repair has been made correctly and that no other malfunctions exist.)

Air Bag Diagnostic System Check Flow

S7RW0A8204002

⚠ **CAUTION**

- **Be sure to perform "Air Bag Diagnostic System Check" before starting diagnosis according to each flow.**
- **When measurement of resistance or voltage is required in the flow, use a tester along with a correct terminal adapter from special tool (Connector test adapter kit).**
- **When a check for proper connection is required, refer to "Inspection of Intermittent and Poor Connections".**
- **If an open circuit in the air bag wire harness damaged, connector or terminal is found, replace the wire harness, connectors and terminals as an assembly.**

Step	Action	Yes	No
1	**Battery voltage check.** 1) Measure battery voltage. *Is it 10 – 14 V?*	Go to Step 2.	Proceed to "Battery Inspection in Section 1J".
2	**"AIR BAG" warning light check (6 times flushing check).** 1) Turn ON ignition switch, and then check that "AIR BAG" warning light flushes. *Does "AIR BAG" warning light flash 6 times?*	Go to Step 3.	Go to Step 4.
3	**"AIR BAG" warning light check (turning off check).** 1) In the state of Step 2. check that "AIR BAG" warning light turn OFF after flashing 6 times. *Does "AIR BAG" warning light turn OFF?*	Go to Step 5.	Go to Step 6.
4	**"AIR BAG" warning light circuit check** *Does "AIR BAG" warning light come ON steady?*	Go to checking flow of ""AIR BAG" Warning Light Comes ON Steady". After carrying out it flow, proceed to Step 6.	Go to checking flow of ""AIR BAG" Warning Light Does Not Come ON". After carrying out it flow, proceed to Step 6.
5	**DTC check** 1) Check DTC using SUZUKI scan tool referring to "DTC Check". *Is "NO CODES" displayed on SUZUKI scan tool?*	Air bag system is in good condition.	Check intermittent troubles referring to "Inspection of Intermittent and Poor Connections". If intermittent troubles are OK, check and repair applicable DTC flow and then repeat this flow.
6	**DTC check** 1) Check DTC using SUZUKI scan tool, referring to "DTC Check". *Is "NO CODES" displayed on SUZUKI scan tool?*	Substitute a known-good SDM and recheck.	Check and repair applicable DTC flow, and then repeat this flow.

DTC Table

S7RW0A8204003

NOTE

The DTCs (B1022 and B1023) shown with asterisk (*) below have been established only for the M15A engine model with 4A/T equipped with slip-control (i.e., Hong Kong model). These codes are meant to be recorded when External Scrapping Deployment Controller is operated by a Japanese authorized special scrapping trader. Therefore, normally these codes will not appear outside Japan. However, should these codes be detected, SDM must be replaced because the cause is due to SDM detection failure.

SDM DTC

DTC No.	Detecting item	Detecting condition (DTC will set when detecting)	Trouble area
—	Normal	—	—
☞ B1013	SDM internal failure	Malfunctioned SDM internal circuit, G sensor, memory or CPU.	• SDM
☞ B1014	“AIR BAG” warning light circuit	“AIR BAG” warning light circuit has been shorted to ground, shorted to power or opened for more than 4 sec.	• “AIR BAG” warning light circuit • Combination meter • SDM
☞ B1016	Power supply voltage too high	Power supply voltage is more than 21.4 V for, more than 16 sec.	• Charging system • SDM
☞ B1017	Power supply voltage too low	Power supply voltage is less than 7.2 V for more than 16 sec.	• Charging system • SDM
☞ B1021	Front air bag deployment record	Deployment of front air bag has been recorded in SDM.	If this DTC has been recorded even though air bag has not been deployed • SDM • Driver and/or Passenger air bag module • Those initiator circuit.
*B1022	Scrapping deployment controller activated	Scrapping deployment command has been input to SDM from external scrapping deployment controller	• SDM
*B1023	Scraping deployment record	Scrapping deployment execution has been recorded in SDM	• SDM
☞ B1024	Driver side-air bag deployment record	Deployment of driver side-air bag has been recorded in SDM.	If this DTC has been recorded even though side-air bag has not been deployed • SDM • Driver side-air bag module • Its initiator circuit
☞ B1025	Passenger side-air bag deployment record	Deployment of passenger side-air bag has been recorded in SDM.	If this DTC has been recorded even though side-air bag has not been deployed • SDM • Passenger side-air bag module • Its initiator circuit

DTC No.	Detecting item	Detecting condition (DTC will set when detecting)	Trouble area
☞ B1026	Seat belt pretensioner activation record	Activation of seat belt pretensioner has been recorded in SDM.	If this DTC has been recorded even though pretensioner has not been activated • SDM • Driver and/or Passenger seat belt pretensioner • Those initiator circuit
☞ B1027	Number of deployment times exceeded limit	Deployment of air bag and activation of seat belt pretensioner have been recorded in SDM 5 times or more.	If this DTC has been recorded even though air bag (front and side) and pretensioner have not been deployed more than 4 place. • SDM (internal fault or reused SDM) • Each of deployment and activation module • Those initiator circuit
☞ B1031	Driver air bag circuit high resistance	Driver air bag circuit is more than 5.2 Ω for more than 4 sec.	• Driver air bag circuit • Contact coil assembly • Driver air bag module • SDM
☞ B1032	Driver air bag circuit low resistance	Driver air bag circuit is less than 1.1 Ω for more than 4 sec.	
☞ B1033	Driver air bag circuit shorted to ground	Driver air bag circuit has been shorted to ground for more than 4 sec.	• Driver air bag circuit • SDM
☞ B1034	Driver air bag circuit shorted to power supply	Driver air bag circuit has been shorted to power supply for more than 4 sec.	
☞ B1041	Passenger air bag circuit high resistance	Passenger air bag circuit is more than 4.0 Ω for more than 4 sec.	• Passenger air bag circuit • Passenger air bag module • SDM
☞ B1042	Passenger air bag circuit low resistance	Passenger air bag circuit is less than 0.9 Ω for more than 4 sec.	
☞ B1043	Passenger air bag circuit shorted to ground	Passenger air bag circuit has been shorted to ground for more than 4 sec.	• Passenger air bag circuit • SDM
☞ B1044	Passenger air bag circuit shorted to power supply	Passenger air bag circuit has been shorted to power supply for more than 4 sec.	
☞ B1051	Driver seat belt pretensioner circuit high resistance	Driver seat belt pretensioner circuit is more than 4.0 Ω for more than 4 sec.	• Driver seat belt pretensioner circuit • Driver seat belt pretensioner • SDM
☞ B1052	Driver seat belt pretensioner circuit low resistance	Driver seat belt pretensioner circuit is less than 0.9 Ω for more than 4 sec.	
☞ B1053	Driver seat belt pretensioner circuit shorted to ground	Driver seat belt pretensioner circuit has been shorted to ground for more than 4 sec.	• Driver seat belt pretensioner circuit • SDM
☞ B1054	Driver seat belt pretensioner circuit shorted to power supply	Driver seat belt pretensioner circuit has been shorted to power supply for more than 4 sec.	
☞ B1055	Passenger seat belt pretensioner circuit high resistance	Passenger seat belt pretensioner circuit is more than 4.0 Ω for more than 4 sec.	• Passenger seat belt pretensioner circuit • Passenger seat belt pretensioner • SDM
☞ B1056	Passenger seat belt pretensioner circuit low resistance	Passenger seat belt pretensioner circuit is less than 0.9 Ω for more than 4 sec.	

DTC No.	Detecting item	Detecting condition (DTC will set when detecting)	Trouble area
☞ B1057	Passenger seat belt pretensioner circuit shorted to ground	Passenger seat belt pretensioner circuit has been shorted to ground for more than 4 sec.	• Passenger seat belt pretensioner circuit • SDM
☞ B1058	Passenger seat belt pretensioner circuit shorted to power supply	Passenger seat belt pretensioner circuit has been shorted to power circuit for more than 4 sec.	
☞ B1061	Driver side-air bag circuit high resistance	Driver side-air bag circuit is more than 3.7 Ω for more than 4 sec.	• Driver side-air bag circuit • Driver side-air bag module • SDM
☞ B1062	Driver side-air bag circuit low resistance	Driver side-air bag circuit is less than 1.0 Ω for more than 4 sec.	
☞ B1063	Driver side-air bag circuit shorted to ground	Driver side-air bag circuit has been shorted to ground for more than 4 sec.	• Driver side-air bag circuit • SDM
☞ B1064	Driver side-air bag circuit shorted to power supply	Driver side-air bag circuit has been shorted to power supply for more than 4 sec.	
☞ B1065	Passenger side-air bag circuit high resistance	Passenger side-air bag circuit is more than 3.7 Ω for more than 4 sec.	• Passenger side-air bag circuit • Driver side-air bag module • SDM
☞ B1066	Passenger side-air bag circuit low resistance	Passenger side-air bag circuit is less than 1.0 Ω for more than 4 sec.	
☞ B1067	Passenger side-air bag circuit shorted to ground	Passenger side-air bag circuit has been shorted to ground for more than 4 sec.	• Passenger side-air bag circuit • SDM
☞ B1068	Passenger side-air bag circuit shorted to power	Passenger side-air bag circuit has been shorted to power circuit for more than 4 sec.	
☞ B1071	Driver forward impact-sensor communication data inconsistent	Driver forward impact-sensor has been communicated with no response or inconsistent ID code for more than 4 sec.	• Driver forward impact-sensor • Driver forward impact-sensor circuit • SDM
☞ B1072	Driver forward impact-sensor communication data invalid	Driver forward impact-sensor has been communicated with invalid data for more than 4 sec.	• Driver forward impact-sensor • SDM
☞ B1073	Driver forward impact-sensor circuit shorted to ground	Driver forward impact-sensor circuit has been shorted to ground for more than 4 sec.	• Driver forward impact-sensor • Driver forward impact-sensor circuit • SDM
☞ B1074	Driver forward impact-sensor circuit open	Driver forward impact-sensor circuit has been shorted to power circuit or opened for more than 4 sec.	
☞ B1081	Driver side impact-sensor no response	Driver side impact-sensor has been communicated with no response for more than 4 sec.	• Driver side impact-sensor circuit • Driver side impact-sensor • SDM
☞ B1082	Driver side impact-sensor communication data invalid	Driver side impact-sensor has been communicated with invalid data for more than 4 sec.	• Driver side impact-sensor • SDM
☞ B1083	Driver side impact-sensor circuit shorted to ground	Driver side impact-sensor circuit has been shorted to ground for more than 4 sec.	• Driver side impact-sensor circuit • Driver side impact-sensor • SDM
☞ B1084	Driver side impact-sensor circuit open	Driver side impact-sensor circuit has been shorted to power circuit or opened for more than 4 sec.	

DTC No.	Detecting item	Detecting condition (DTC will set when detecting)	Trouble area
☞ B1085	Driver side impact-sensor communication data inconsistent	Driver side impact-sensor has been communicated with inconsistent ID code for more than 4 sec.	• Driver side impact-sensor • SDM
☞ B1091	Passenger side impact-sensor no response	Communication with passenger side impact-sensor has been no response for more than 4 sec.	• Passenger side impact-sensor circuit • Passenger side impact-sensor • SDM
☞ B1092	Passenger side impact-sensor communication data invalid	Passenger side impact-sensor has been communicated with invalid data for more than 4 sec.	• Passenger side impact-sensor circuit • SDM
☞ B1093	Passenger side impact-sensor circuit shorted to ground	Passenger side impact-sensor circuit has been shorted to ground for more than 4 sec.	• Passenger side impact-sensor • SDM
☞ B1094	Passenger side impact-sensor circuit open	Passenger side impact-sensor circuit has been shorted to power circuit or opened for more than 4 sec.	
☞ B1095	Passenger side impact-sensor communication data inconsistent	Passenger side impact-sensor has been communicated with inconsistent ID code for more than 4 sec.	• Passenger side impact-sensor • SDM
☞ B1361	Driver curtain-air bag circuit high resistance	Driver curtain-air bag circuit is more than 3.8 Ω for more than 4 sec.	• Driver curtain-air bag circuit • Driver curtain-air bag module • SDM
☞ B1362	Driver curtain-air bag circuit low resistance	Driver curtain-air bag circuit is less than 1.0 Ω for more than 4 sec.	
☞ B1363	Driver curtain-air bag circuit shorted to ground	Driver curtain-air bag circuit has been shorted to ground for more than 4 sec.	• Driver curtain-air bag circuit • SDM
☞ B1364	Driver curtain-air bag circuit shorted to power	Driver curtain-air bag circuit has been shorted to power circuit for more than 4 sec.	
☞ B1365	Passenger curtain-air bag circuit high resistance	Passenger curtain-air bag circuit is more than 3.8 Ω for more than 4 sec.	• Passenger curtain-air bag circuit • Passenger curtain-air bag module • SDM
☞ B1366	Passenger curtain-air bag circuit low resistance	Passenger curtain-air bag circuit is less than 1.0 Ω for more than 4 sec.	
☞ B1367	Passenger curtain-air bag circuit shorted to ground	Passenger curtain-air bag circuit has been shorted to ground for more than 4 sec.	• Passenger curtain-air bag circuit • SDM
☞ B1368	Passenger curtain-air bag circuit shorted to power	Passenger curtain-air bag circuit has been shorted to power circuit for more than 4 sec.	

DTC Check

S7RW0A8204004

1) Turn ignition switch to OFF position.
2) Connect SUZUKI scan tool to data link connector (DLC) located on underside of instrument panel at driver's seat side.

   Special tool
   (A): SUZUKI scan tool

3) Turn ignition switch to ON position.
4) Read DTC according to instructions displayed on SUZUKI scan tool and print it or write it down. Refer to SUZUKI scan tool operator's manual for further details.
   If communication between scan tool and SDM is not possible, check if scan tool is communicable by connecting it to SDM in another vehicle. If communication is possible in this case, scan tool is in good condition. Then check data link connector and serial data line (circuit) in the vehicle with which communication was not possible.
   If connector and circuit are OK, check that DLC circuit and power supply and ground circuits of SDM are in good condition referring to "SDM Power Supply and Ground Circuit Check" and "Serial Data Link Circuit Check".
5) After completing the check, turn ignition switch to OFF position and disconnect SUZUKI scan tool from data link connector (DLC) (1).

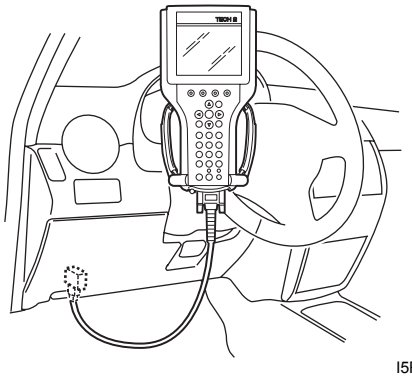

I5RW0A820010-03

DTC Clearance

S7RW0A8204005

1) Turn ignition switch to OFF position.
2) Connect SUZUKI scan tool to data link connector (DLC) (1) in the same manner as when making this connection for DTC check.

   Special tool
   (A): SUZUKI scan tool

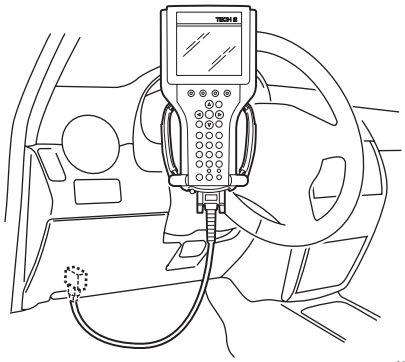

I5RW0A820010-03

3) Turn ignition switch to ON position.
4) Erase DTC according to instructions displayed on SUZUKI scan tool. Refer to SUZUKI scan tool operator's manual for further details.
5) After completing the clearance, perform "DTC Check" and confirm that normal DTC (NO CODES) is displayed and not malfunction DTC.
6) Turn ignition switch to OFF position and disconnect SUZUKI scan tool from DLC.

NOTE

If DTC B1013, DTC B1021 or DTC B1027 is stored in SDM, it is not possible to clear DTC.

Scan Tool Data

S7RW0A8204006

Data list of SDM

Scan Tool Data	Normal Condition / Reference Value
☞ Buck Up Volt	27.0 – 33.0 V
☞ Battery Voltage	10 – 14 V
☞ Driv Air Bag Ini Res	1.5 – 5.0 ohm
☞ Pass Air Bag Ini Res	1.0 – 3.8 ohm
☞ Driv Preten Ini Res	1.0 – 3.8 ohm
☞ Pass Preten Ini Res	1.0 – 3.8 ohm
☞ Driv Sidebag Ini Res	1.0 – 3.5 ohm
☞ Pass Sidebag Ini Res	1.0 – 3.5 ohm
☞ Driv curtain Ini Res	1.0 – 3.5 ohm
☞ Pass curtain Ini Res	1.0 – 3.5 ohm
☞ System ID	4ch or 8ch

Scan Tool Data Definition

Buck Up Volt (V)
This parameter indicates the capacity of the backup capacitor installed to maintain the ignition current (as much as possible) even when the power supply to SDM that ignites the inflator is shut off.

Battery Voltage (V)
Battery voltage is an analog input signal read by SDM.

Dirv Air Bag Ini Res (Driver air bag initiator resistance) (ohm)
This parameter indicates the resistance of the driver air bag initiator circuit.

Pass Air Bag Ini Res (Passenger air bag initiator resistance) (ohm)
This parameter indicates the resistance of the passenger air bag initiator circuit.

Driv Preten Ini Res (Driver pretensioner initiator resistance) (ohm)
This parameter indicates the resistance of the driver seat belt pretensioner initiator circuit.

Pass Preten Ini Res (Passenger pretensioner initiator resistance) (ohm)
This parameter indicates the resistance of the passenger seat belt pretensioner initiator circuit.

Driv Sidebag Ini Res (Driver side-air bag initiator resistance) (ohm)
This parameter indicates the resistance of the driver side-air bag initiator circuit.

Pass Sidebag Ini Res (Passenger side-air bag initiator resistance) (ohm)
This parameter indicates the resistance of the passenger side-air bag initiator circuit.

Driv curtain Ini RES (Driver side curtain-air bag initiator resistance) (ohm)
This parameter indicates the resistance of the driver side curtain-air bag initiator circuit.

Pass curtain Ini RES (Passenger side curtain-air bag initiator resistance) (ohm)
This parameter indicates the resistance of the passenger side curtain-air bag initiator circuit.

System ID (4ch/8ch)
This parameter indicates the number of initiator circuits.

"AIR BAG" Warning Light Comes ON Steady

S7RW0A8204007

Wiring Diagram

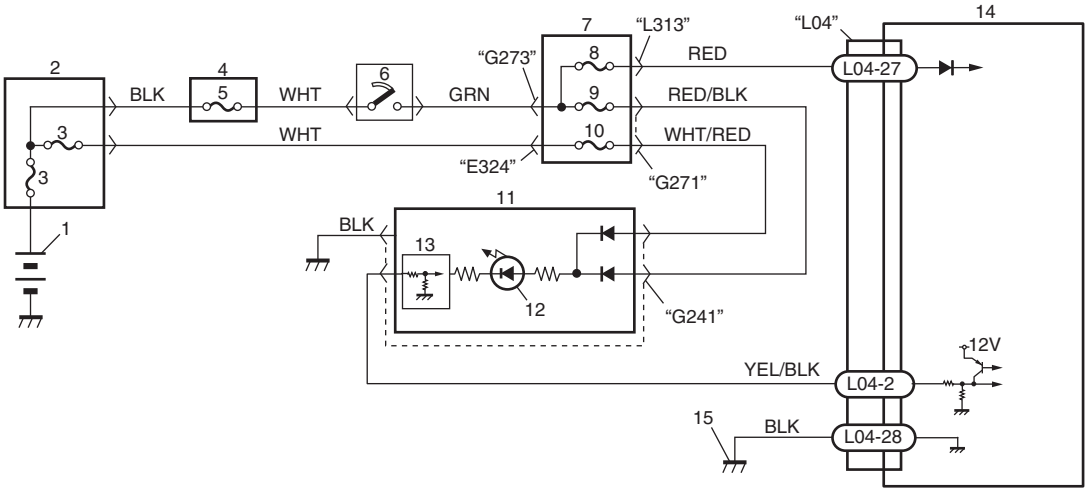

I6RW0C820005-01

1. Battery	5. "IGN" fuse	9. "METER" fuse	13. Light driver
2. Main fuse box	6. Ignition switch	10. "DOME" fuse	14. SDM
3. Fuse	7. Junction block assembly	11. Combination meter	15. Ground for SDM
4. Individual circuit fuse box No.1	8. "A/B" fuse	12. "AIR BAG" warning light	

Troubleshooting

Step	Action	Yes	No
1	*Was "Air Bag Diagnostic System Check Flow" performed?*	Go to Step 2.	Go to "Air Bag Diagnostic System Check Flow".
2	**SDM power supply and ground circuit check** 1) Check SDM power supply and ground circuit referring to "SDM Power Supply and Ground Circuit Check". *Is SDM power supply and ground circuit in good condition?*	Go to Step 3.	Repair defective power supply and ground circuit.
3	**"AIR BAG" warning light circuit check** 1) Disconnect combination meter connector "G241" referring to "Combination Meter Removal and Installation in Section 9C". 2) Disconnect SDM connector "L04". 3) Check for proper connection to SDM connector at terminal "L04-2". 4) Check for proper connection to combination meter at terminal "G241-5". 5) If OK, measure resistance between "G241-5" and "L04-2" terminals. **Special tool** **(A): 09932–76010** 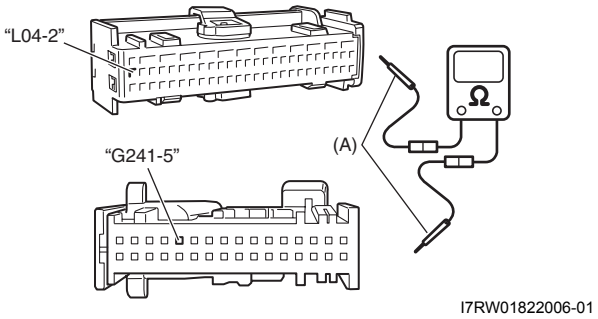 *Is measured resistance 1 Ω or less?*	Go to Step 4.	Repair "YEL/BLK" wire (between combination meter and SDM connector) for open or high resistance.
4	**"AIR BAG" warning light circuit check** 1) Measure resistance between "L04-2" terminal and body ground. **Special tool** **(A): 09932–76010** 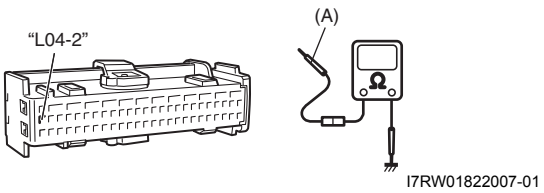 *Is measured resistance infinity?*	Go to Step 5.	Repair "YEL/BLK" wire (between combination meter and SDM connector) for short to ground.

Step	Action	Yes	No
5	**“AIR BAG” warning light circuit check** 1) Connect SDM connector “L04” and combination meter connector “G241”. 2) With ignition switch turned ON, measure voltage between “G241-5” terminal and body ground. **Special tool** **(A): 09932–76010** 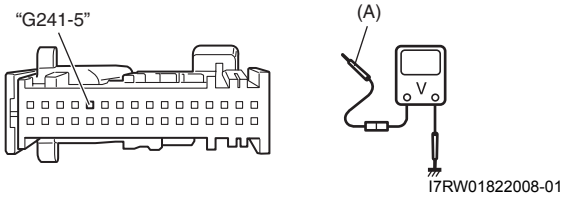 *Is measured voltage in 8 – 12 V?*	Replace combination meter.	Go to Step 6.
6	**“AIR BAG” warning light circuit check** 1) Disconnect combination meter connector “G241”. 2) Measure voltage between “G241-5” terminal and body ground. **Special tool** **(A): 09932–76010** 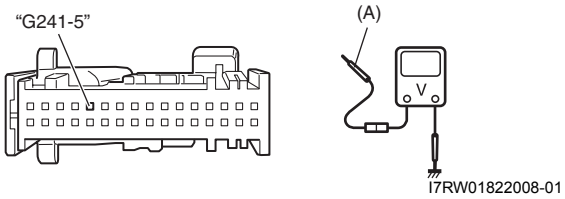 *Is measured voltage in 10 – 14 V?*	Replace combination meter.	Replace SDM.

NOTE

Upon completion of inspection and repair work, perform the following items.

- **Reconnect all air bag system components and ensure all components are properly mounted.**
- **Repeat “Air Bag Diagnostic System Check” to confirm that the trouble has been corrected.**

“AIR BAG” Warning Light Does Not Come ON

S7RW0A8204008

Wiring Diagram

Refer to ““AIR BAG” Warning Light Comes ON Steady”.

Troubleshooting

Step	Action	Yes	No
1	*Was “Air Bag Diagnostic System Check Flow” performed?*	Go to Step 2.	Go to “Air Bag Diagnostic System Check Flow”.
2	**Combination meter power feed circuit check** 1) Set parking brake. 2) Note combination meter when ignition switch is turned ON. *Does the “BRAKE” indicator (warning light) come ON?*	Go to Step 3.	Check combination meter power and ground circuit referring to “C-1 Combination Meter Circuit Diagram (Meter) in Section 9A”.
3	**“AIR BAG” warning light circuit check** 1) Disconnect SDM connector “L04”. 2) Note combination meter when ignition switch is turned ON. *Does the “AIR BAG” warning light come ON?*	Substitute a known-good SDM and recheck.	Go to Step 4.
4	**“AIR BAG” warning light circuit check** 1) Disconnect SDM connector “L04”. 2) With ignition switch turned ON, measure voltage between “L04-02” terminal and body ground. **Special tool** **(A): 09932–76010** 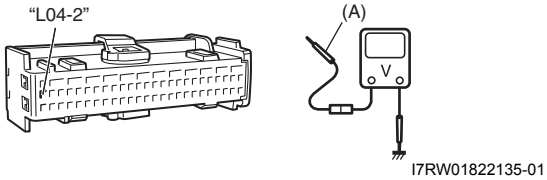 *Is measured voltage 0 V?*	Replace combination meter.	Repair “YEL/BLK” circuit for short to power circuit.

NOTE

Upon completion of inspection and repair work, perform the following items.

- **Reconnect all air bag system components and ensure all components are properly mounted.**
- **Repeat “Air Bag Diagnostic System Check” to confirm that the trouble has been corrected.**

Serial Data Link Circuit Check

S7RW0A8204009

Wiring Diagram

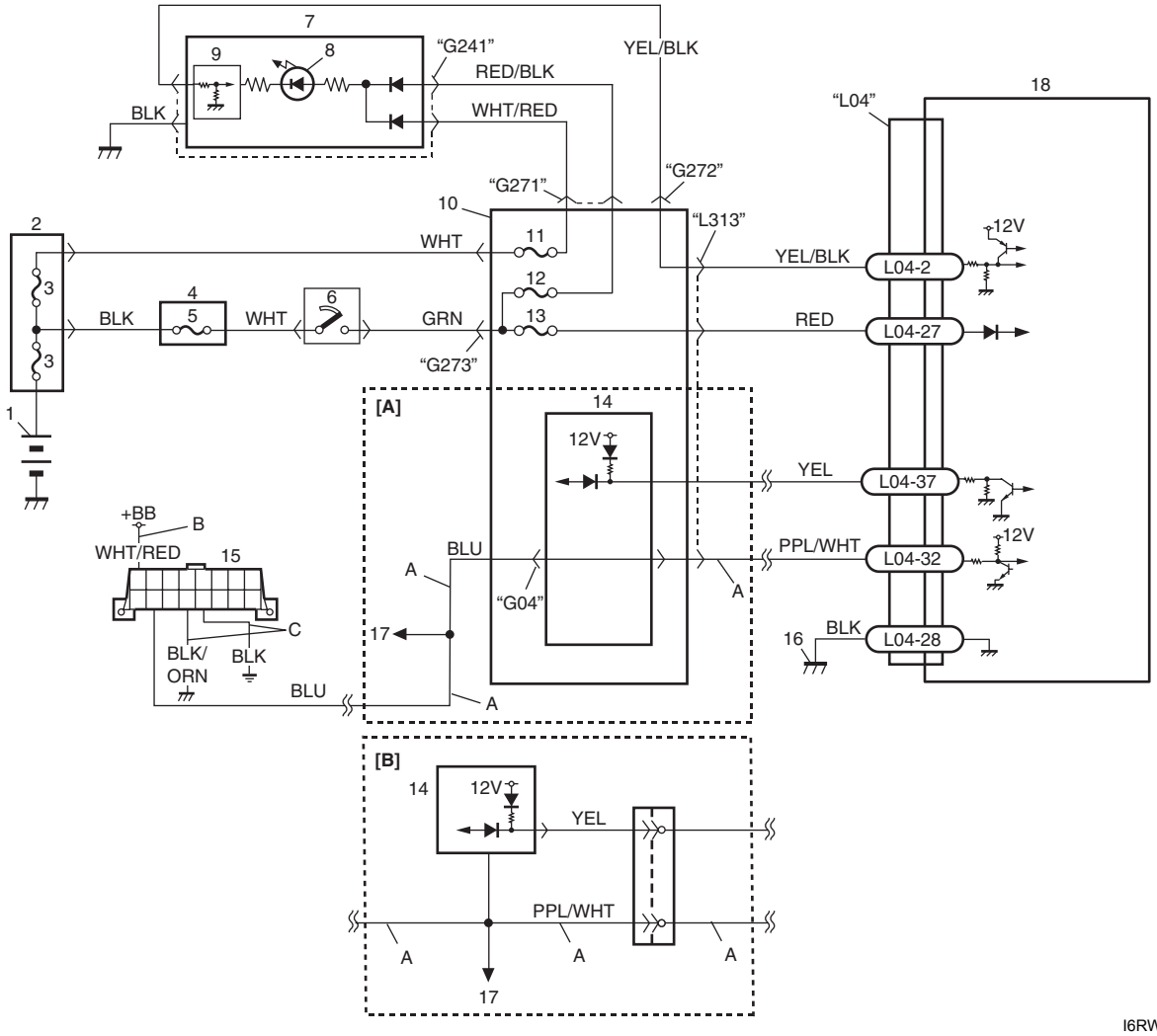

I6RW0C820006-01

[A]: Junction block with BCM model	4. Individual circuit fuse box No.1	12. "METER" fuse
[B]: Junction block without BCM model (That is, TAIWAN spec model)	5. "IGN" fuse	13. "A/B" fuse
A: Serial data circuit	6. Ignition switch	14. BCM
B: DLC power supply circuit	7. Combination meter	15. Data link connector (DLC)
C: DLC ground circuit	8. "AIR BAG" warning light	16. Ground for air system
1. Battery	9. Light driver	17. To HVAC control module (auto A/C model)
2. Main fuse box	10. Junction block assembly	18. SDM
3. Fuse	11. "DOME" fuse	

Troubleshooting

Step	Action	Yes	No
1	**“AIR BAG” warning light check** 1) Turn ignition switch to ON position. *Does “AIR BAG” warning light come ON steady?*	Go to ““AIR BAG” Warning Light Comes ON Steady”.	Go to Step 2.
2	**Scan tool condition check** 1) Make sure that SUZUKI scan tool is as follows. • Correct PCMCIA card (software) is used. • There are no deformation and wear for DLC cable terminals. • Connection for DLC cable terminals is in good condition. *Are they OK?*	Go to Step 3.	Repair or replace defective part.
3	**Scan tool operation check** 1) Check DLC terminal for deformation and wear. 2) If it is in good condition, connect SUZUKI scan tool to DLC with ignition switch turned OFF. 3) Check if communication is possible by making communication with other control modules (BCM, ABS control module, HVAC control module (auto A/C model) or P/S control module). *Is it possible to communicate with the other control modules?*	Go to Step 4.	Go to Step 6.
4	**Serial communication circuit check** 1) With ignition switch turned OFF, disconnect SDM connector “L04” and check for proper connection at SDM connector terminal. 2) If connections are OK, check that “Serial data circuit” is as follows. • Wiring resistance of “Serial data circuit” wire between DLC and SDM connector is less than 1 Ω. *Is it resistance less than 1 Ω?*	Go to Step 5.	“Serial data circuit” is open or high resistance.
5	**SDM power and ground circuit check** 1) Check power supply circuit and ground circuit for SDM referring to “SDM Power Supply and Ground Circuit Check”. *Is check result in good condition?*	Substitute a known-good SDM and recheck.	Repair or replace defective circuit.
6	**DLC power and ground circuit check** 1) Check power supply circuit and ground circuit for DLC as follows. • Voltage of “DLC power supply circuit” between DLC terminal and vehicle body ground is 10 – 14 V with ignition switch turned ON. • Wire resistance of each “DLC ground circuit” between DLC terminal and vehicle body ground is less than 1Ω. *Is check result in good condition?*	Go to Step 7.	Repair or replace defective circuit.

Step	Action	Yes	No
7	**Serial communication circuit check** 1) With ignition switch turned OFF, disconnect SDM connector “L04” and check for proper connection at SDM connector terminal. 2) If connections are OK, check that “Serial data circuit” is as follows. • Insulation resistance of “Serial data circuit” wire is infinity between its terminal and other terminals at SDM connector. • Insulation resistance of “Serial data circuit” wire is infinity between its terminal and vehicle body ground. *Is circuit in good condition?*	Go to Step 8.	Repair or replace defective circuit.
8	**Scan tool operation check** 1) Check if communication is possible by making communication with other vehicles. *Is it possible to communicate with the other vehicle?*	Scan tool is in good condition, check intermittent trouble referring to “Intermittent and Poor Connection Inspection in Section 00”.	Recheck PCMCIA card and DLC cable for faulty condition. If they are OK, scan tool is faulty.

DTC B1013: SDM Internal Failure

S7RW0A8204010

DTC Detecting Condition and Trouble Area

DTC detecting condition	Trouble area
Malfunctioned SDM internal circuit, G sensor, memory or CPU.	• SDM

NOTE

DTC B1013 can never be cleared once it has been set.

DTC Troubleshooting

Step	Action	Yes	No
1	*Was “Air Bag Diagnostic System Check Flow” performed?*	Go to Step 2.	Go to “Air Bag Diagnostic System Check Flow”
2	**DTC check** 1) Clear DTC referring to “DTC Clearance”. 2) Turn OFF ignition switch. 3) Turn ON ignition switch and check DTC. *Is DTC B1013 still indicated?*	Go to Step 3.	Intermittent trouble. Check for intermittent referring to “Intermittent and Poor Connection Inspection in Section 00”.
3	**SDM power supply and ground circuit check** 1) Check SDM power supply and ground circuit referring to “SDM Power Supply and Ground Circuit Check”. *Is SDM power supply and ground circuit in good condition?*	Substitute a known-good SDM and recheck.	Repair power supply and ground circuit.

NOTE

Upon completion of inspection and repair work, perform the following items.

- **Reconnect all air bag system components and ensure all components are properly mounted.**
- **Clear DTCs referring to “DTC Clearance”, if any.**
- **Repeat “Air Bag Diagnostic System Check” to confirm that the trouble has been corrected.**

DTC B1014: “AIR BAG” Warning Light Circuit

S7RW0A8204011

Wiring Diagram

Refer to““AIR BAG” Warning Light Comes ON Steady”.

DTC Detecting Condition and Trouble Area

DTC detecting condition	Trouble area
“AIR BAG” warning light circuit has been shorted to ground, shorted to power or opened for more than 4 sec.	“AIR BAG” warning light circuit • Combination meter • SDM

DTC Troubleshooting

Step	Action	Yes	No
1	*Was “Air Bag Diagnostic System Check Flow” performed?*	Go to Step 2.	Go to “Air Bag Diagnostic System Check Flow”.
2	**Air bag warning light check** *In “Air Bag Diagnostic System Check Flow”, was air bag warning light operation in good condition?*	Substitute a known good SDM and recheck.	Go to applicable symptom diagnosis check flow referring to ““AIR BAG” Warning Light Comes ON Steady” or ““AIR BAG” Warning Light Does Not Come ON”.

NOTE

Upon completion of inspection and repair work, perform the following items.

- **Reconnect all air bag system components and ensure all components are properly mounted.**
- **Clear DTCs referring to “DTC Clearance”, if any.**
- **Repeat “Air Bag Diagnostic System Check” to confirm that the trouble has been corrected.**

DTC B1016: Power Supply Voltage too High

S7RW0A8204012

Wiring Diagram

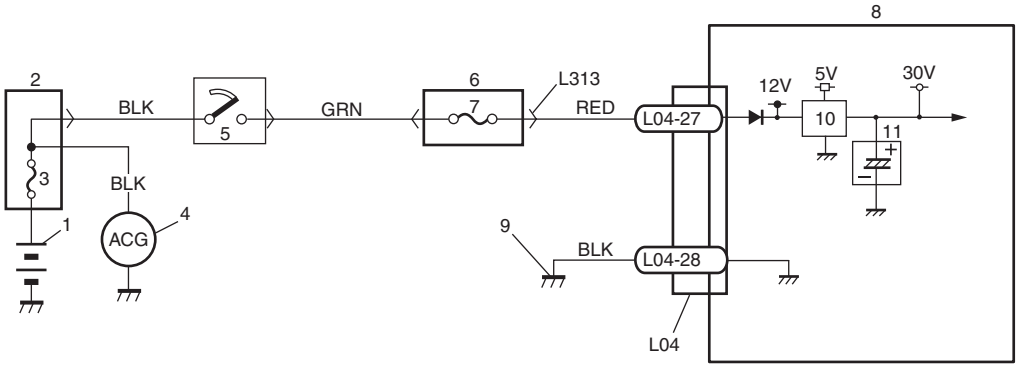

I6RW0C820007-01

1. Battery	5. Ignition switch	9. Ground for air bag system
2. Main fuse box	6. Junction block assembly	10. DC / DC converter
3. Fuse	7. “A/B” fuse	11. Back up capacitor
4. Generator	8. SDM	

DTC Detecting Condition and Trouble Area

DTC detecting condition	Trouble area
Power supply voltage is more than 21.4 V for, more than 16 sec.	• Charging system • SDM

DTC Troubleshooting

Step	Action	Yes	No
1	*Was "Air Bag Diagnostic System Check Flow" performed?*	Go to Step 2.	Go to "Air Bag Diagnostic System Check Flow".
2	**SDM power supply voltage check** 1) With ignition switch turned OFF, disconnect SDM connector "L04". 2) Check for proper connection to SDM at "L04-27" terminal. 3) If OK, run engine with more than 3000 rpm. 4) In this state, check voltage between "L04-27" terminal on SDM connector and body ground. **Special tool** **(A): 09932–76010** 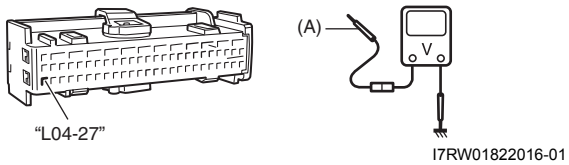 *Is measured voltage 15 V or less?*	Go to Step 3.	Check charging system and repair as necessary referring to "Generator Test (Overcharged Battery Check) in Section 1J".
3	**DTC B1016 recheck** 1) With ignition switch turned OFF, reconnect SDM connector. *With ignition switch turned ON, is DTC B1016 still indicated?*	Substitute a known-good SDM and recheck.	Intermittent trouble. Check for intermittent trouble referring to "Inspection of Intermittent and Poor Connections" If OK, substitute a known-good SDM and recheck.

NOTE

Upon completion of inspection and repair work, perform the following items.

- **Reconnect all air bag system components and ensure all components are properly mounted.**
- **Clear DTCs referring to "DTC Clearance", if any.**
- **Repeat "Air Bag Diagnostic System Check" to confirm that the trouble has been corrected.**

DTC B1017: Power Supply Voltage too Low

S7RW0A8204013

Wiring Diagram

Refer to "DTC B1016: Power Supply Voltage too High".

DTC Detecting Condition and Trouble Area

DTC detecting condition	Trouble area
Power supply voltage is less than 7.2 V for more than 16 sec.	• Charging system • SDM

DTC Troubleshooting

Step	Action	Yes	No
1	*Was "Air Bag Diagnostic System Check Flow" performed?*	Go to Step 2.	Go to "Air Bag Diagnostic System Check Flow".
2	**SDM power supply and ground circuit check** 1) Check SDM power supply and ground circuit referring to "SDM Power Supply and Ground Circuit Check". *Is SDM power supply and ground circuit in good condition?*	Go to Step 3.	Repair defective wire circuit.
3	**DTC B1017 recheck** 1) With ignition switch turned OFF, reconnect SDM connector. *With ignition switch ON, does DTC B1017 exist?*	Substitute a known-good SDM and recheck.	Intermittent trouble. Check for intermittent trouble referring to "Inspection of Intermittent and Poor Connections" If OK, substitute a known-good SDM and recheck.

NOTE

Upon completion of inspection and repair work, perform the following items.

- **Reconnect all air bag system components and ensure all components are properly mounted.**
- **Clear DTCs referring to "DTC Clearance", if any.**
- **Repeat "Air Bag Diagnostic System Check" to confirm that the trouble has been corrected.**

DTC B1021: Front Air Bag Deployment Record

S7RW0A8204014

DTC Detecting Condition and Trouble Area

DTC detecting condition	Trouble area
Deployment of front air bag has been recorded in SDM.	If this DTC has been recorded even though air bag has not been deployed • SDM • Driver and/or Passenger air bag module • Those initiator circuit.

NOTE

DTC B1201 can never be cleared once it has been set.

DTC Troubleshooting

Step	Action	Yes	No
1	*Was "Air Bag Diagnostic System Check Flow" performed?*	Go to Step 2.	Go to "Air Bag Diagnostic System Check Flow".
2	**Front air bag deployment check** 1) Turn OFF ignition switch. 2) Check that DTC B1021 has been set although air bag has not been deployed. *Has air bag deployed?*	Inspect and replace components according to "Repair and Inspection Required after Accident".	Go to Step 3.
3	**Front impact sign check** 1) Inspect front of vehicle and undercarriage for signs of impact. *Are there any signs of impact?*	Inspect and replace components according to "Repair and Inspection Required after Accident".	Replace SDM.

NOTE

Upon completion of inspection and repair work, perform the following items.

- **Reconnect all air bag system components and ensure all components are properly mounted.**
- **Repeat "Air Bag Diagnostic System Check" to confirm that the trouble has been corrected.**
- **Clear DTCs of BCM referring to "DTC Clearance in Section 10B".**
- **Clear DTC B1157 (air bag deployed) of BCM referring to "DTC Clearance in Section 10B", if any.**

DTC B1024 / B1025: Side Air-Bag Deployment Record

S7RW0A8204015

DTC B1024: Driver Side Air-Bag Deployment Record
DTC B1025: Passenger Side Air-Bag Deployment Record

DTC Detecting Condition and Trouble Area

DTC detecting condition	Trouble area
DTC B1024: Deployment of driver side-air bag has been recorded in SDM. **DTC B1025:** Deployment of passenger side-air bag has been recorded in SDM.	If this DTC has been recorded even though side-air bag has not been deployed • SDM • Driver (passenger) side-air bag module • Its initiator circuit

DTC Troubleshooting

Step	Action	Yes	No
1	*Was "Air Bag Diagnostic System Check Flow" performed?*	Go to Step 2.	Go to "Air Bag Diagnostic System Check Flow".
2	**Side-air bag deployment check** 1) Turn OFF ignition switch. 2) Check that DTC B1024 or B1025 has been set although side-air bag has not been deployed. *Has air bag deployed?*	Inspect and replace components according to "Repair and Inspection Required after Accident".	Go to Step 3.
3	**Side impact sign (driver / passenger) check** 1) Inspect side of vehicle and undercarriage for signs of impact. *Are there any signs of impact?*	Inspect and replace components according to "Repair and Inspection Required after Accident".	Replace SDM.

NOTE

Upon completion of inspection and repair work, perform the following items.

- **Reconnect all air bag system components and ensure all components are properly mounted.**
- **Repeat "Air Bag Diagnostic System Check" to confirm that the trouble has been corrected.**
- **Clear DTC B1157 (air bag deployed) of BCM referring to "DTC Clearance in Section 10B", if any.**

DTC B1026: Seat Belt Pretensioner Activation Record

S7RW0A8204016

DTC Detecting Condition and Trouble Area

DTC detecting condition	Trouble area
Activation of seat belt pretensioner has been recorded in SDM.	If this DTC has been recorded even though pretensioner has not been activated • SDM • Driver and/or Passenger seat belt pretensioner • Those initiator circuit

DTC Troubleshooting

Step	Action	Yes	No
1	*Was "Air Bag Diagnostic System Check Flow" performed?*	Go to Step 2.	Go to "Air Bag Diagnostic System Check Flow".
2	**Seat belt pretensioner activation check** 1) Turn OFF ignition switch. 2) Check that DTC B1026 has been set although pretensioner has not been activated. *Has pretensioner activated?*	Inspect and replace components according to "Repair and Inspection Required after Accident".	Go to Step 3.
3	**Front impact sign check** 1) Inspect front of vehicle and undercarriage for signs of impact. *Are there any signs of impact?*	Inspect and replace components according to "Repair and Inspection Required after Accident".	Replace SDM.

NOTE

Upon completion of inspection and repair work, perform the following items.

- **Reconnect all air bag system components and ensure all components are properly mounted.**
- **Repeat "Air Bag Diagnostic System Check" to confirm that the trouble has been corrected.**
- **Clear DTC B1157 (air bag deployed) of BCM referring to "DTC Clearance in Section 10B", if any.**

DTC B1027: Number of Deployment Times Exceeded Limit

S7RW0A8204017

DTC Detecting Condition and Trouble Area

DTC detecting condition	Trouble area
Deployment of air bag and/or activation of seat belt pretensioner have been recorded in SDM 5 times or more.	If this DTC has been recorded even though air bag (front and side) and pretensioner have not been deployed more than 4 place. • SDM (internal fault or reused SDM) • Each of deployment and activation module • Those initiator circuit

NOTE

DTC B1027 can never be cleared once it has been set.

DTC Trouble shooting

Step	Action	Yes	No
1	*Was "Air Bag Diagnostic System Check Flow" performed?*	Go to Step 2.	Go to "Air Bag Diagnostic System Check Flow".
2	**Air bag deployment check** 1) Turn OFF ignition switch. 2) Check that DTC B1027 has been set although air bag (front and side) and pretensioner has not been deployed. *Have air bag and pretensioner deployed more than 4 place?*	Inspect and replace components according to "Repair and Inspection Required after Accident".	Go to Step 3.
3	**Impact sign check** 1) Inspect front, side of vehicle and undercarriage for signs of impact. *Are there any signs of impact?*	Inspect and replace components according to "Repair and Inspection Required after Accident".	Replace SDM.

NOTE

Upon completion of inspection and repair work, perform the following items.

- **Reconnect all air bag system components and ensure all components are properly mounted.**
- **Repeat "Air Bag Diagnostic System Check" to confirm that the trouble has been corrected.**
- **Clear DTC B1157 (air bag deployed) of BCM referring to "DTC Clearance in Section 10B", if any.**

DTC B1031: Driver Air Bag Circuit High Resistance

S7RW0A8204018

Wiring Diagram

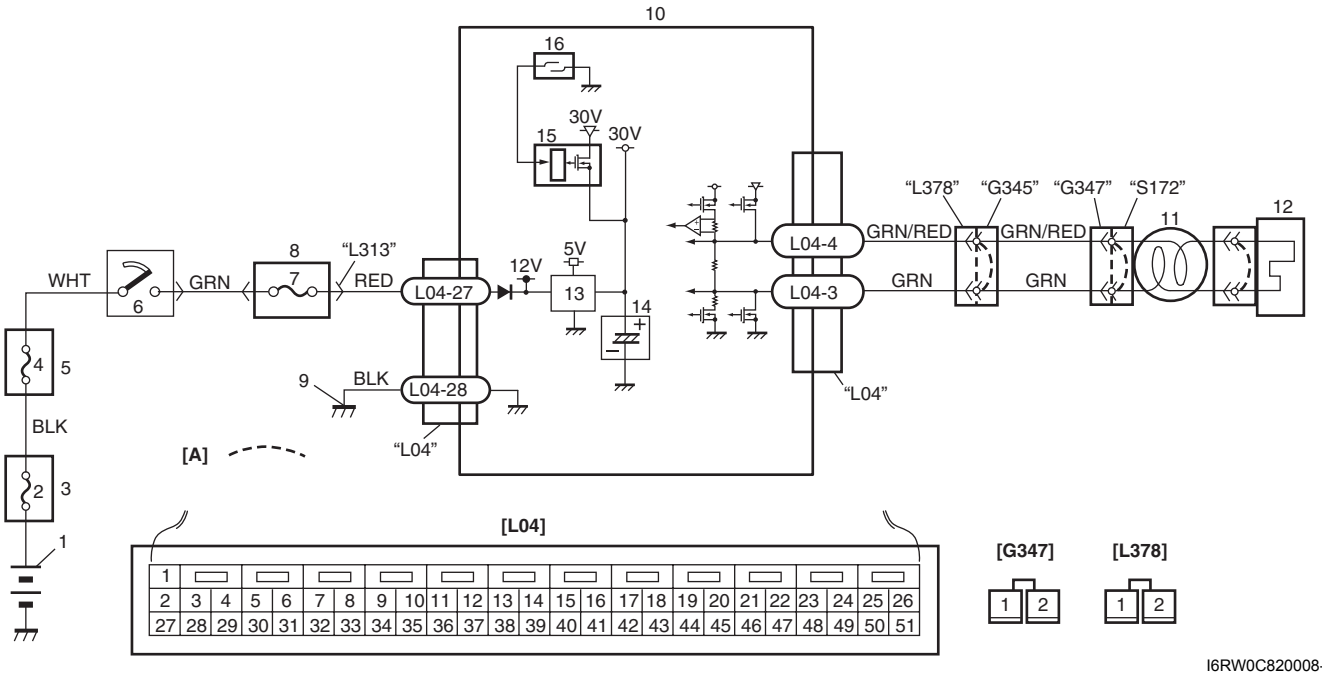

I6RW0C820008-01

[A]: Shorting bar	6. Ignition switch	12. Driver air bag (inflator) module
1. Battery	7. "A/B" fuse	13. DC / DC converter
2. Fuse	8. Junction block assembly	14. Back up capacitor
3. Main fuse box	9. Ground for air bag system	15. Safing power driver
4. "IGN" fuse	10. SDM	16. Mechanical longitudinal G sensor (switch)
5. Individual circuit fuse box No.1	11. Contact coil assembly	

DTC Detecting Condition and Trouble Area

DTC detecting condition	Trouble area
Driver air bag circuit is more than 5.2 Ω for more than 4 sec.	• Driver air bag circuit • Contact coil assembly • Driver air bag module • SDM

DTC Troubleshooting

Step	Action	Yes	No
1	*Was "Air Bag Diagnostic System Check Flow" performed?*	Go to Step 2.	Go to "Air Bag Diagnostic System Check Flow".
2	**Drive air bag circuit check** 1) With ignition switch turned OFF, disconnect contact coil connector located under the steering column. 2) Check for proper connection to contact coil at terminal in "G347" connector. 3) If OK, then connect special tools (A) and (B) to "G347" connector disconnected in Step 1). **Special tool** **(A): 09932–75010** **(B): 09932–78340** 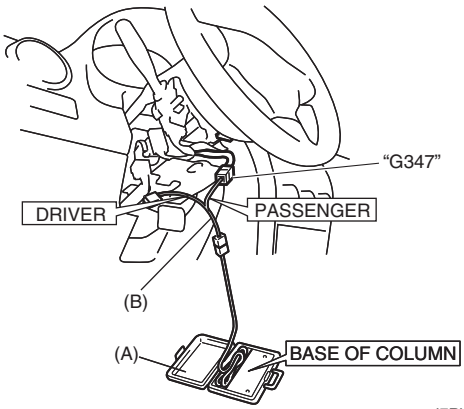 I7RW01821018-02 4) Check SDM for DTC. *With ignition switch turned ON, is DTC B1031 indicated?*	Go to Step 3.	Go to Step 5.
3	**Driver air bag circuit check** 1) Disconnect SDM connector "L04". 2) Check for proper connection to SDM connector at terminal "L04-3" and "L04-4". 3) If OK, release shorting bar in SDM connector inserting release tool (1) included in special tool (A). **Special tool** **(A): 09932–76010** 4) Measure resistance between "L04-3" and "G347-2" terminals. 5) Measure resistance between "L04-4" and "G347-1" terminals. 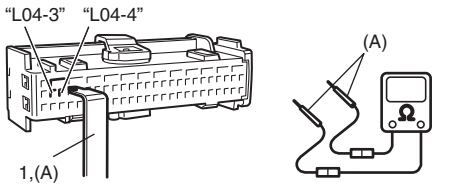 I7RW01821019-01 *Is each measured resistance 1Ω or less?*	Substitute a known-good SDM and recheck.	Go to Step 4.

Step	Action	Yes	No
4	**Floor harness circuit check** 1) Disconnect “L378” connector located near the driver side front pillar lower trim. 2) Check for proper connection to floor harness connector at terminal in “L378” connector. 3) If OK, release shorting bar in SDM connector inserting release tool (1) included in special tool (A). **Special tool** **(A): 09932–76010** 4) Measure resistance between “L04-3” and “L378-1” terminals. 5) Measure resistance between “L04-4” and “L378-2” terminals. 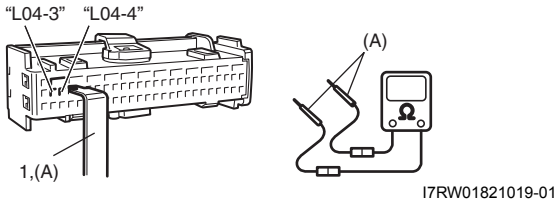 *Is each measured resistance 1Ω or less?*	Repair high resistance or open wire in “GRN/RED” or “GRN” circuit at instrument panel harness.	Repair high resistance or open wire in “GRN/RED” or “GRN” circuit at floor harness.
5	**Contact coil circuit check** 1) Check contact coil circuit referring to “Contact Coil Cable and Its Circuit Check”. *Is contact coil circuit in good condition?*	Replace driver air bag (inflator) module referring to “Driver Air Bag (Inflator) Module Removal and Installation”.	Replace contact coil assembly referring to “Contact Coil Cable Assembly Removal and Installation in Section 6B”.

NOTE

Upon completion of inspection and repair work, perform the following items.

- **Reconnect all air bag system components and ensure all components are properly mounted.**
- **Clear DTCs referring to “DTC Clearance”, if any.**
- **Repeat “Air Bag Diagnostic System Check” to confirm that the trouble has been corrected.**

DTC B1032: Driver Air Bag Circuit Low Resistance

S7RW0A8204019

Wiring Diagram

Refer to “DTC B1031: Driver Air Bag Circuit High Resistance”.

DTC Detecting Condition and Trouble Area

DTC detecting condition	Trouble area
Driver air bag circuit is less than 1.1 Ω for more than 4 sec.	• Driver air bag circuit • Contact coil assembly • Driver air bag module • SDM

DTC Troubleshooting

Step	Action	Yes	No
1	*Was “Air Bag Diagnostic System Check Flow” performed?*	Go to Step 2.	Go to “Air Bag Diagnostic System Check Flow”.
2	**Driver air bag circuit check** 1) With ignition switch turned OFF, disconnect contact coil connector located under the steering column. 2) Check for proper connection to contact coil at terminal in “G347” connector. 3) If OK, then connect special tools (A) and (B) to “G347” connector disconnected in Step 1). **Special tool** **(A): 09932–75010** **(B): 09932–78340** 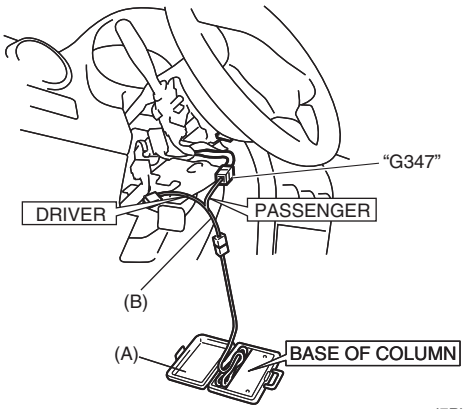 I7RW01821018-02 4) Check SDM for DTC. *With ignition switch turned ON, is DTC B1032 indicated?*	Go to Step 3.	Go to Step 5.
3	**Driver air bag circuit check** 1) Disconnect SDM connector “L04”. 2) Check for proper connection to SDM connector at terminal “L04-3” and “L04-2”. 3) If OK, release shorting bar in SDM connector inserting release tool (1) included in special tool (A). **Special tool** **(A): 09932–76010** 4) Measure resistance between “G347-1” and “G347-2” terminals. 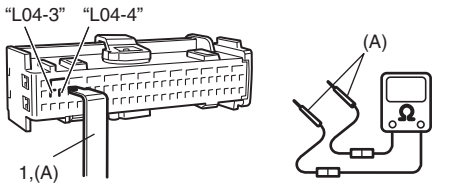 I7RW01821019-01 *Is measured resistance infinity?*	Substitute a known-good SDM and recheck.	Go to Step 4.

Step	Action	Yes	No
4	**Floor harness resistance check** 1) Disconnect “L378” connector located near the driver side front pillar lower trim. 2) Check for proper connection to floor harness connector at terminal in “L378” connector. 3) If OK, release shorting bar in SDM connector inserting release tool (1) included in special tool (A). **Special tool** **(A): 09932–76010** 4) Measure resistance between “L378-1” and “L378-2” terminals. 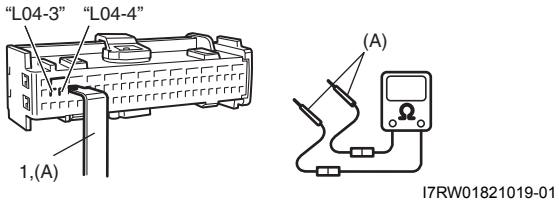 *Is measured resistance infinity?*	Repair “GRN/RED” circuit for short to “GRN” circuit at instrument panel harness.	Repair “GRN/RED” circuit for short to “GRN” circuit at floor harness.
5	**Contact coil circuit check** 1) Check contact coil circuit referring to “Contact Coil Cable and Its Circuit Check”. *Is contact coil circuit in good condition?*	Replace driver air bag (inflator) module referring to “Driver Air Bag (Inflator) Module Removal and Installation”.	Replace contact coil assembly referring to “Contact Coil Cable Assembly Removal and Installation in Section 6B”.

NOTE

Upon completion of inspection and repair work, perform the following items.

- **Reconnect all air bag system components and ensure all components are properly mounted.**
- **Clear DTCs referring to “DTC Clearance”, if any.**
- **Repeat “Air Bag Diagnostic System Check” to confirm that the trouble has been corrected.**

DTC B1033: Driver Air Bag Circuit Shorted to Ground

S7RW0A8204020

Wiring Diagram

Refer to “DTC B1031: Driver Air Bag Circuit High Resistance”.

DTC Detecting Condition and Trouble Area

DTC detecting condition	Trouble area
Driver air bag circuit has been shorted to ground for more than 4 sec.	• Driver air bag circuit • SDM

DTC Troubleshooting

Step	Action	Yes	No
1	*Was “Air Bag Diagnostic System Check Flow” performed?*	Go to Step 2.	Go to “Air Bag Diagnostic System Check Flow”.
2	**Driver air bag circuit check** 1) With ignition switch turned OFF, disconnect contact coil connector “G347” located under the steering column. 2) Disconnect SDM connector “L04”. 3) Check for proper connection to flow harness connector at terminal in “G347” connector. 4) Check for proper connection to SDM connector at terminal “L04-3” and “L04-4”. 5) If OK, release shorting bar in SDM connector inserting release tool (1) included in special tool (A). **Special tool** **(A): 09932–76010** 6) Measure resistance between “G347-1” terminal and body ground, and between “G347-2” terminal and body ground. 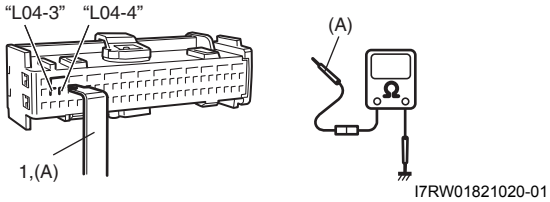 *Is each measured resistance infinity?*	Go to Step 4.	Go to Step 3.
3	**Floor harness circuit check** 1) Disconnect “L378” connector located near the driver side front pillar lower trim. 2) If OK, release shorting bar in SDM connector inserting release tool (1) included in special tool (A). **Special tool** **(A): 09932–76010** 3) Measure resistance between “L378-1” terminal and body ground, and between “L378-2” terminal and body ground. 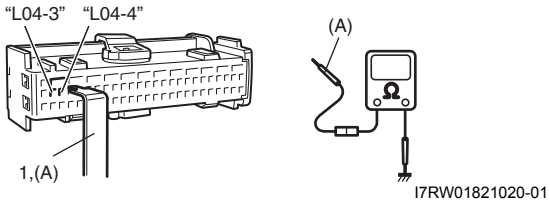 *Is each measured resistance infinity?*	Repair “GRN/RED” circuit or “GRN” circuit for short to ground at instrument panel harness.	Repair “GRN/RED” circuit or “GRN” circuit for short to ground at floor harness.

Step	Action	Yes	No
4	**Contact coil circuit check** 1) Connect contact coil connector “G347” located under the steering column. 2) Remove driver air bag (inflator) module from steering column referring to “Driver Air Bag (Inflator) Module Removal and Installation”. 3) Check for proper connection to driver air bag (inflator) module at terminal in connector (2). 4) If OK, release shorting bar in SDM connector inserting release tool (1) included in special tool (A). **Special tool** **(A): 09932–76010** 5) Measure resistance between each terminals of driver air bag (inflator) module connector (2) and body ground. 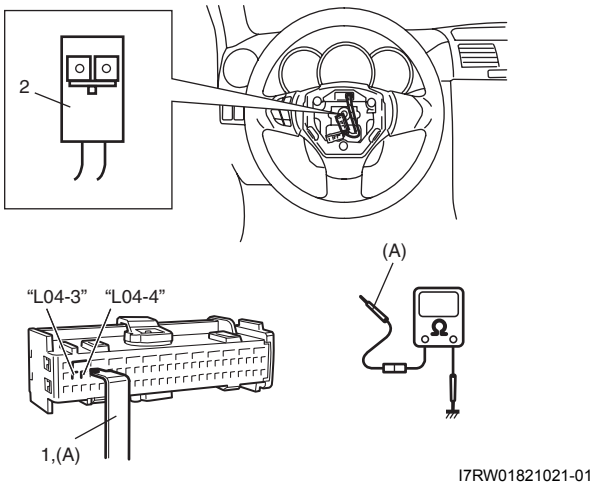 *Is each measured resistance infinity?*	Substitute a known-good SDM and recheck.	Replace contact coil assembly referring to “Contact Coil Cable Assembly Removal and Installation in Section 6B”.

NOTE

Upon completion of inspection and repair work, perform the following items.

- **Reconnect all air bag system components and ensure all components are properly mounted.**
- **Clear DTCs referring to “DTC Clearance”, if any.**
- **Repeat “Air Bag Diagnostic System Check” to confirm that the trouble has been corrected.**

DTC B1034: Driver Air Bag Circuit Shorted to Power Supply

S7RW0A8204021

Wiring Diagram

Refer to “DTC B1031: Driver Air Bag Circuit High Resistance”.

DTC Detecting Condition and Trouble Area

DTC detecting condition	Trouble area
Driver air bag circuit has been shorted to power supply for more than 4 sec.	• Driver air bag circuit • SDM

DTC Troubleshooting

Step	Action	Yes	No
1	*Was “Air Bag Diagnostic System Check Flow” performed?*	Go to Step 2.	Go to “Air Bag Diagnostic System Check Flow”.
2	**Driver air bag circuit check** 1) With ignition switch turned OFF, disconnect contact coil connector “G347” located under the steering column. 2) Disconnect SDM connector “L04”. 3) Check for proper connection to contact coil connector at terminal in “G347” connector. 4) Check for proper connection to SDM connector at terminal “L04-3” and “L04-4”. 5) If OK, release shorting bar in SDM connector inserting release tool (1) included in special tool (A). **Special tool** **(A): 09932–76010** 6) With ignition switch turned ON, measure voltage between “G347-1” terminal and body ground, and between “G347-2” terminal and body ground. 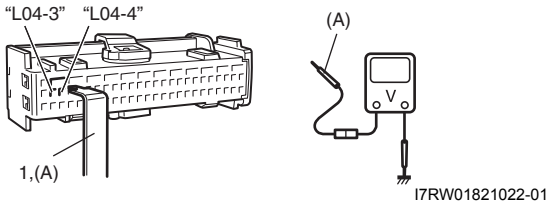 *Is each measured voltage 0 V?*	Go to Step 4.	Go to Step 3.
3	**Floor harness circuit check** 1) Disconnect “L378” connector located near the driver side front pillar lower trim. 2) If OK, release shorting bar in SDM connector inserting release tool (1) included in special tool (A). **Special tool** **(A): 09932–76010** 3) With ignition switch turned ON, measure voltage between “L378-1” terminal and body ground, and between “L378-2” terminal and body ground. 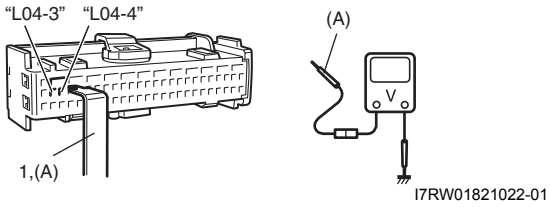 *Is each measured voltage 0 V?*	Repair “GRN/RED” circuit or “GRN” circuit for short to power supply circuit at instrument panel harness.	Repair “GRN/RED” circuit or “GRN” circuit for short to power supply circuit at floor harness.

Step	Action	Yes	No
4	**Contact coil circuit check** 1) Connect contact coil connector “G347” located under the steering column. 2) Remove driver air bag (inflator) module from steering column referring to “Driver Air Bag (Inflator) Module Removal and Installation”. 3) Check for proper connection to driver air bag (inflator) module at terminal in connector (2). 4) If OK, release shorting bar in SDM connector inserting release tool (1) included in special tool (A). **Special tool** **(A): 09932–76010** 5) With ignition switch turned ON, measure voltage between each terminals of driver air bag (inflator) module connector (2) and body ground. 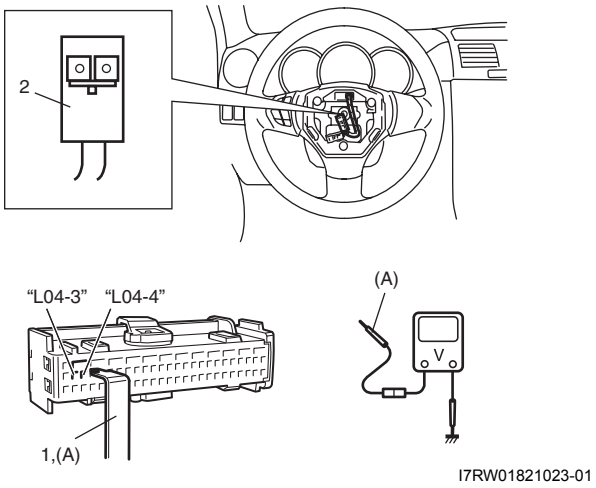 *Is each measured voltage 0 V?*	Substitute a known-good SDM and recheck.	Replace contact coil assembly referring to “Contact Coil Cable Assembly Removal and Installation in Section 6B”.

NOTE

Upon completion of inspection and repair work, perform the following items.

- **Reconnect all air bag system components and ensure all components are properly mounted.**
- **Clear DTCs referring to “DTC Clearance”, if any.**
- **Repeat “Air Bag Diagnostic System Check” to confirm that the trouble has been corrected.**

DTC B1041: Passenger Air Bag Circuit High Resistance

S7RW0A8204022

Wiring Diagram

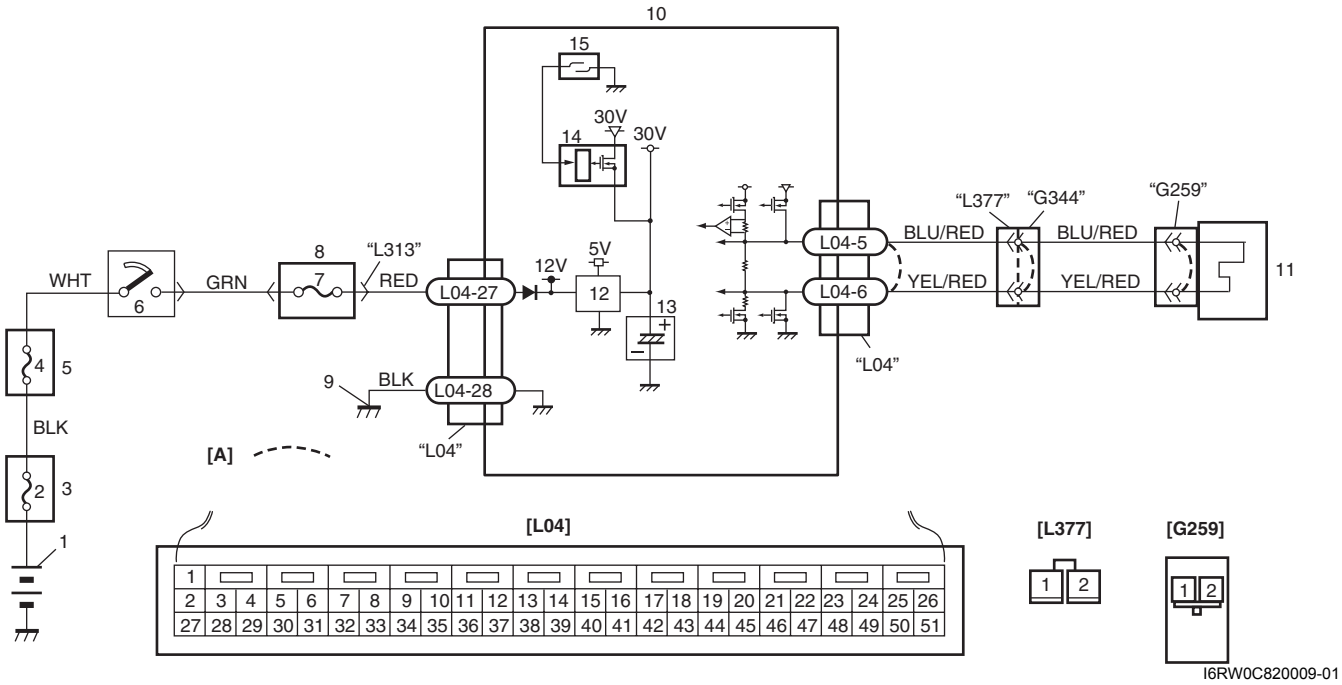

I6RW0C820009-01

[A]: Shorting bar	6. Ignition switch	12. DC / DC converter
1. Battery	7. "A/B" fuse	13. Back up capacitor
2. Fuse	8. Junction block assembly	14. Safing power driver
3. Main fuse box	9. Ground for air bag system	15. Mechanical longitudinal G sensor (switch)
4. "IGN" fuse	10. SDM	
5. Individual circuit fuse box No.1	11. Passenger air bag (inflator) module	

DTC Detecting Condition and Trouble Area

DTC detecting condition	Trouble area
Passenger air bag circuit is more than 4.0 Ω for more than 4 sec.	• Passenger air bag circuit • Passenger air bag module • SDM

DTC Troubleshooting

Step	Action	Yes	No
1	*Was “Air Bag Diagnostic System Check Flow” performed?*	Go to Step 2.	Go to “Air Bag Diagnostic System Check Flow”.
2	**Passenger air bag check** 1) Remove passenger air bag (inflator) module referring to “Passenger Air Bag (Inflator) Module Removal and Installation”. 2) Check for proper connection to passenger air bag (inflator) module at terminals in “G259” connector. 3) If OK, then connect special tools (A), (B) and (C) to “G259” connector. **Special tool** **(A): 09932–76010** **(B): 09932–75010** **(C): 09932–78310** 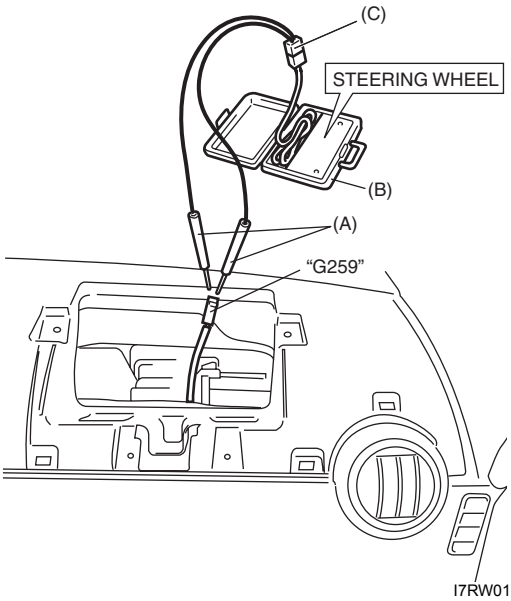 I7RW01821025-02 4) Check SDM for DTC. *With ignition switch turned ON, is DTC B1041 indicated?*	Go to Step 3.	Replace passenger air bag (inflator) module referring to “Passenger Air Bag (Inflator) Module Removal and Installation”.

Step	Action	Yes	No
3	**Passenger air bag circuit check** 1) With ignition switch turned OFF, disconnect SDM connector “L04”. 2) Check for proper connection to SDM connector at terminal “L04-5” and “L04-6”. 3) If OK, release shorting bar in SDM connector by inserting release tool (1) included in special tool (A). **Special tool** **(A): 09932–76010** 4) Measure resistance between “L04-5” and “G259-1” terminals. 5) Measure resistance between “L04-6” and “G259-2” terminals. 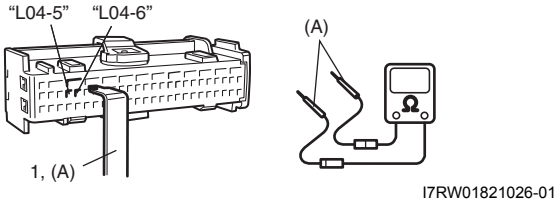 *Is each measured resistance 1Ω or less?*	Substitute a known-good SDM and recheck.	Go to Step 4.
4	**Floor harness circuit check** 1) Disconnect “L377” connector located near the passenger side front pillar lower trim. 2) Check for proper connection to floor harness connector at terminal in “L377” connector. 3) If OK, release shorting bar in SDM connector by inserting release tool (1) included in special tool (A). **Special tool** **(A): 09932–76010** 4) Measure resistance between “L04-5” and “L377-2” terminals. 5) Measure resistance between “L04-6” and “L377-1” terminals. 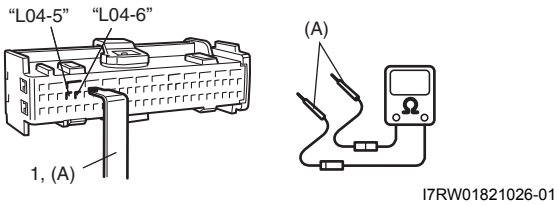 *Is each measured resistance 1 Ω or less?*	Repair high resistance or open wire in “BLU/RED” or “YEL/RED” circuit at instrument panel harness.	Repair high resistance or open wire in “BLU/RED” or “YEL/RED” circuit at floor harness.

NOTE

Upon completion of inspection and repair work, perform the following items.

- **Reconnect all air bag system components and ensure all components are properly mounted.**
- **Clear DTCs referring to “DTC Clearance”, if any.**
- **Repeat “Air Bag Diagnostic System Check” to confirm that the trouble has been corrected.**

DTC B1042: Passenger Air Bag Circuit Low Resistance

S7RW0A8204023

Wiring Diagram

Refer to “DTC B1041: Passenger Air Bag Circuit High Resistance”.

DTC Detecting Condition and Trouble Area

DTC detecting condition	Trouble area
Passenger air bag circuit is less than 0.9 Ω for more than 4 sec.	• Passenger air bag circuit • Passenger air bag module • SDM

DTC Troubleshooting

Step	Action	Yes	No
1	*Was “Air Bag Diagnostic System Check Flow” performed?*	Go to Step 2.	Go to “Air Bag Diagnostic System Check Flow”.
2	**Passenger air bag circuit check** 1) Remove passenger air bag (inflator) module referring to “Passenger Air Bag (Inflator) Module Removal and Installation”. 2) Check for proper connection to passenger air bag (inflator) module at terminals in “G259” connector. 3) If OK, then connect special tools (A), (B) and (C) to “G259” connector. **Special tool** **(A): 09932–76010** **(B): 09932–75010** **(C): 09932–78310** 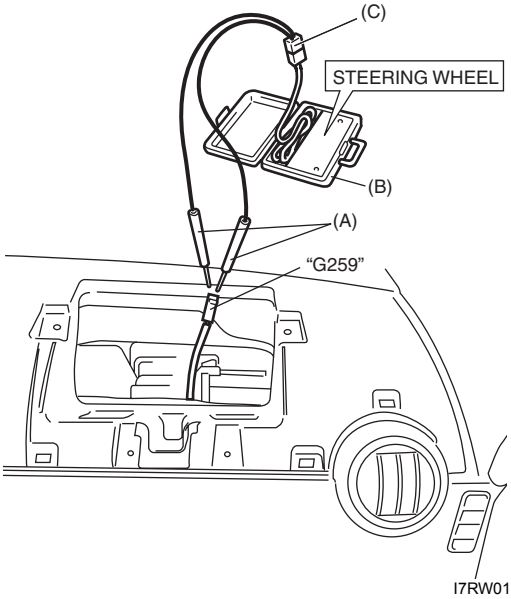 I7RW01821025-02 4) Check SDM for DTC. *With ignition switch ON, is DTC B1042 indicated?*	Go to Step 3.	Replace passenger air bag (inflator) module referring to “Passenger Air Bag (Inflator) Module Removal and Installation”.

Step	Action	Yes	No
3	**Passenger air bag circuit check** 1) With ignition switch turned OFF, disconnect SDM connector “L04”. 2) Check for proper connection to SDM connector at terminal “L04-5” and “L04-6”. 3) If OK, release shorting bar in SDM connector inserting release tool (1) included in special tool (A). **Special tool** **(A): 09932–76010** 4) Measure resistance between “G259-1” and “G259-2” terminals. 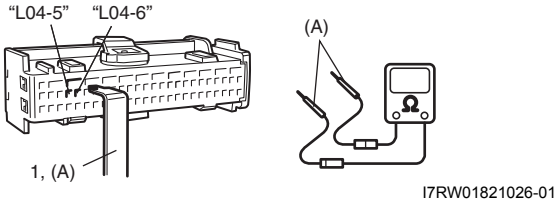 *Is measured resistance infinity?*	Substitute a known-good SDM and recheck.	Go to Step 4.
4	**Floor harness circuit check** 1) Disconnect “L377” connector located near the passenger side front pillar lower trim. 2) Check for proper connection to floor harness connector at terminal in “L377” connector. 3) If OK, release shorting bar in SDM connector inserting release tool (1) included in special tool (A). **Special tool** **(A): 09932–76010** 4) Measure resistance between “L377-1” and “L377-2” terminals. 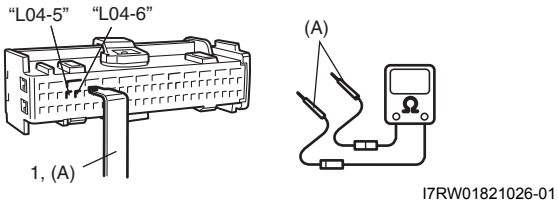 *Is measured resistance infinity?*	Repair “BLU/RED” circuit for short to “YEL/RED” circuit at instrument panel harness.	Repair “BLU/RED” circuit for short to “YEL/RED” circuit at floor harness.

NOTE

Upon completion of inspection and repair work, perform the following items.

- **Reconnect all air bag system components and ensure all components are properly mounted.**
- **Clear DTCs referring to “DTC Clearance”, if any.**
- **Repeat “Air Bag Diagnostic System Check” to confirm that the trouble has been corrected.**

DTC B1043: Passenger Air Bag Circuit Shorted to Ground

S7RW0A8204024

Wiring Diagram

Refer to “DTC B1041: Passenger Air Bag Circuit High Resistance”.

DTC Detecting Condition and Trouble Area

DTC detecting condition	Trouble area
Passenger air bag circuit has been shorted to ground for more than 4 sec.	• Passenger air bag circuit • SDM

DTC Troubleshooting

Step	Action	Yes	No
1	*Was “Air Bag Diagnostic System Check Flow” performed?*	Go to Step 2.	Go to “Air Bag Diagnostic System Check Flow”.
2	**Passenger air bag circuit check** 1) Remove passenger air bag (inflator) module from steering column referring to “Passenger Air Bag (Inflator) Module Removal and Installation”. 2) Disconnect SDM connector “L04”. 3) Check for proper connection to SDM connector at terminal “L04-5” and “L04-6”. 4) Check for proper connection to passenger air bag (inflator) module at terminals in “G259” connector. 5) If OK, release shorting bar in SDM connector inserting release tool (1) included in special tool (A). **Special tool** **(A): 09932–76010** 6) Measure resistance between “L04-5” terminal and body ground, and between “L04-6” terminal and body ground. 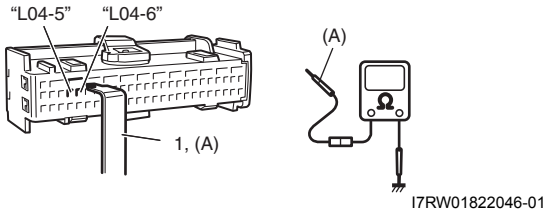 *Is each measured resistance infinity?*	Substitute a known-good SDM and recheck.	Go to Step 3.

Step	Action	Yes	No
3	**Floor harness circuit check** 1) Disconnect “L377” connector located near the passenger side front pillar lower trim. 2) Check for proper connection to floor harness connector at terminal in “L377” connector. 3) If OK, release shorting bar in SDM connector inserting release tool (1) included in special tool (A). **Special tool** **(A): 09932–76010** 4) Measure resistance between “L377-1” terminal and body ground, and between “L377-2” terminal and body ground. 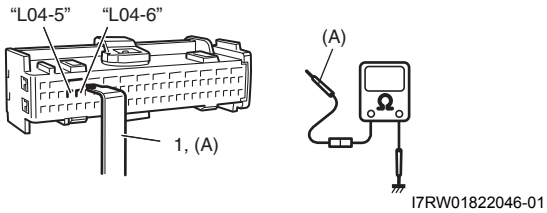 *Is each measured resistance infinity?*	Repair “BLU/RED” circuit or “YEL/RED” circuit for short to ground at instrument panel harness.	Repair “BLU/RED” circuit or “YEL/RED” circuit for short to ground at floor harness.

NOTE

Upon completion of inspection and repair work, perform the following items.

- **Reconnect all air bag system components and ensure all components are properly mounted.**
- **Clear DTCs referring to “DTC Clearance”, if any.**
- **Repeat “Air Bag Diagnostic System Check” to confirm that the trouble has been corrected.**

DTC B1044: Passenger Air Bag Circuit Shorted to Power Supply

S7RW0A8204025

Wiring Diagram

Refer to “DTC B1041: Passenger Air Bag Circuit High Resistance”.

DTC Detecting Condition and Trouble Area

DTC detecting condition	Trouble area
Passenger air bag circuit has been shorted to power supply for more than 4 sec.	• Passenger air bag circuit • SDM

DTC Troubleshooting

Step	Action	Yes	No
1	*Was “Air Bag Diagnostic System Check Flow” performed?*	Go to Step 2.	Go to “Air Bag Diagnostic System Check Flow”.

Step	Action	Yes	No
2	**Passenger air bag circuit check** 1) Remove passenger air bag (inflator) module from steering column referring to “Passenger Air Bag (Inflator) Module Removal and Installation”. 2) Disconnect SDM connector “L04”. 3) Check for proper connection to SDM connector at terminal “L04-5” and “L04-6”. 4) Check for proper connection to passenger air bag (inflator) module at terminals in “G259” connector. 5) If OK, release shorting bar in SDM connector inserting release tool (1) included in special tool (A). **Special tool** **(A): 09932–76010** 6) With ignition switch turned ON, measure voltage between “L04-5” terminal and body ground, and between “L04-6” terminal and body ground. 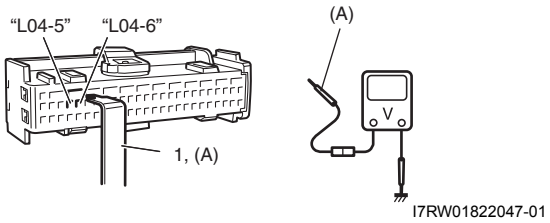 *Is each measured voltage 0 V?*	Substitute a known-good SDM and recheck.	Go to Step 3.
3	**Floor harness circuit check** 1) Disconnect “L377” connector located near the passenger side front pillar lower trim. 2) Check for proper connection to floor harness connector at terminal in “L377” connector. 3) If OK, release shorting bar in SDM connector inserting release tool (1) included in special tool (A). **Special tool** **(A): 09932–76010** 4) With ignition switch turned ON, measure voltage between “L377-1” terminal and body ground, and between “L377-2” terminal and body ground. 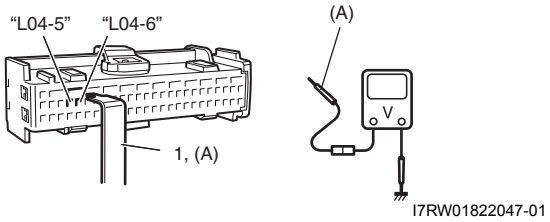 *Is each measured voltage 0 V?*	Repair “BLU/RED” circuit or “YEL/RED” circuit for short to power supply circuit at instrument panel harness.	Repair “BLU/RED” circuit or “YEL/RED” circuit for short to power supply circuit at floor harness.

NOTE

Upon completion of inspection and repair work, perform the following items.

- **Reconnect all air bag system components and ensure all components are properly mounted.**
- **Clear DTCs referring to “DTC Clearance”, if any.**
- **Repeat “Air Bag Diagnostic System Check” to confirm that the trouble has been corrected.**

DTC B1051 / B1055: Seat Belt Pretensioner Circuit High Resistance

S7RW0A8204026

DTC B1051: Driver Seat Belt Pretensioner Circuit High Resistance
DTC B1055: Passenger Seat Belt Pretensioner Circuit High Resistance

Wiring Diagram

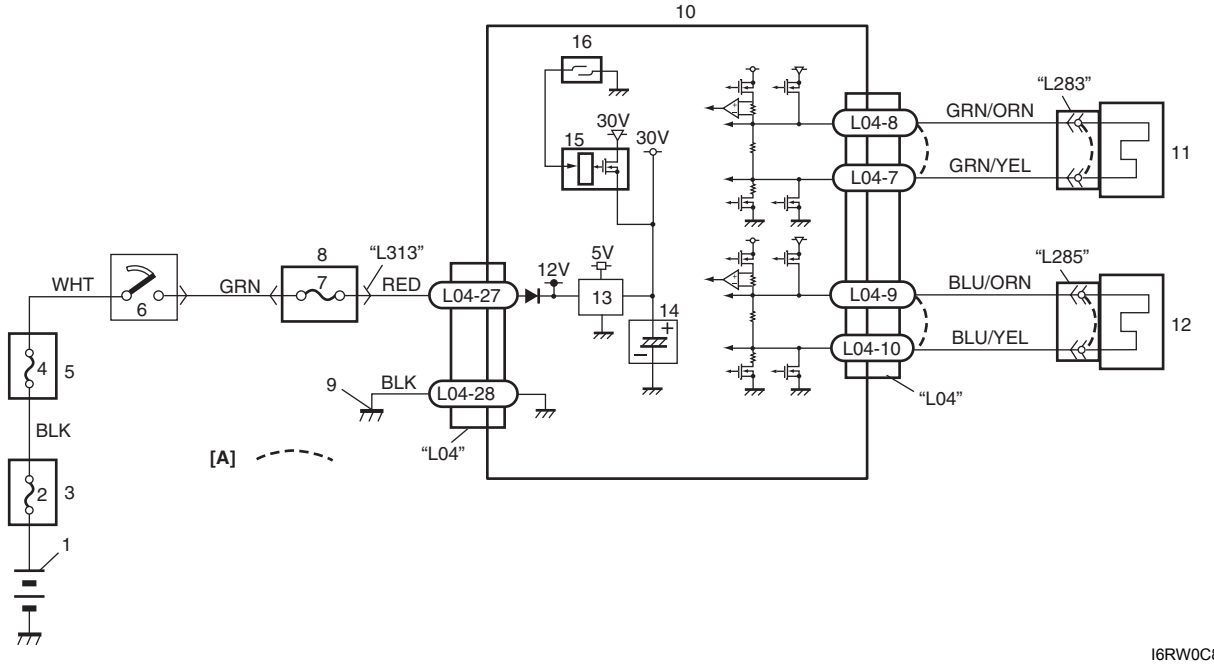

I6RW0C820010-01

[A]: Shorting bar	6. Ignition switch	12. Passenger seat belt pretensioner
1. Battery	7. "A/B" fuse	13. DC / DC converter
2. Fuse	8. Junction block assembly	14. Back up capacitor
3. Main fuse box	9. Ground for air bag system	15. Safing power driver
4. "IGN" fuse	10. SDM	16. Mechanical longitudinal G sensor (switch)
5. Individual circuit fuse box No.1	11. Driver seat belt pretensioner	

DTC Detecting Condition and Trouble Area

DTC detecting condition	Trouble area
DTC B1051: Driver seat belt pretensioner circuit is more than 4.0 Ω for more than 4 sec. **DTC B1055:** Passenger seat belt pretensioner circuit is more than 4.0 Ω for more than 4 sec.	• Driver / passenger seat belt pretensioner circuit • Driver / passenger seat belt pretensioner • SDM

DTC Troubleshooting

Step	Action	Yes	No
1	*Was "Air Bag Diagnostic System Check Flow" performed?*	Go to Step 2.	Go to "Air Bag Diagnostic System Check Flow".

Step	Action	Yes	No
2	**Seat belt pretensioner circuit check** 1) With ignition switch turned OFF, remove center pillar lower trim of applicable side and disconnect seat belt pretensioner connector “L283” or “L285”. 2) Check for proper connection to applicable seat belt pretensioner at terminals in “L283” or “L285” connector. 3) If OK, then connect special tools (A), (B) and (C) to “L283” or “L285” connector disconnected in Step 1). **Special tool** **(A): 09932–76010** **(B): 09932–75010** **(C): 09932–78310** 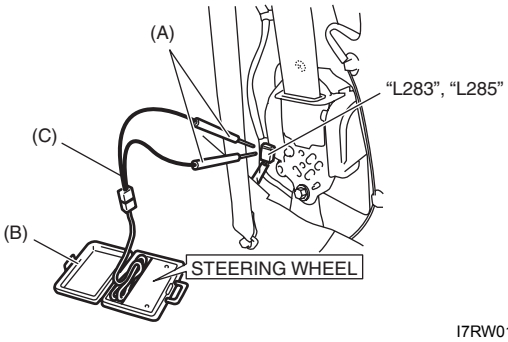 I7RW01822057-01 4) Check SDM for DTC. *With ignition switch turned ON, is DTC B1051 or B1055 still indicated?*	Go to Step 3.	Replace defective seat belt pretensioner referring to “Front Seat Belt Removal and Installation in Section 8A”.

Step	Action	Yes	No
3	**Seat belt pretensioner circuit resistance check** 1) Disconnect special tools from applicable seat belt pretensioner connector. 2) Disconnect SDM connector “L04”. 3) Check for proper connection to SDM at terminals “L04-7” and “L04-8” (for DTC B1051) or terminals “L04-9” and “L04-10” (for DTC B1055). 4) If OK, release shorting bar in SDM connector inserting release tool (1) included in special tool (A). 5) Measure resistance between “L04-7” and “L283-2”, and between “L04-8” and “L283-1” (for DTC B1051). 6) Measure resistance between “L04-9” and “L285-1”, and between “L04-10” and “L285-2” (for DTC B1055). 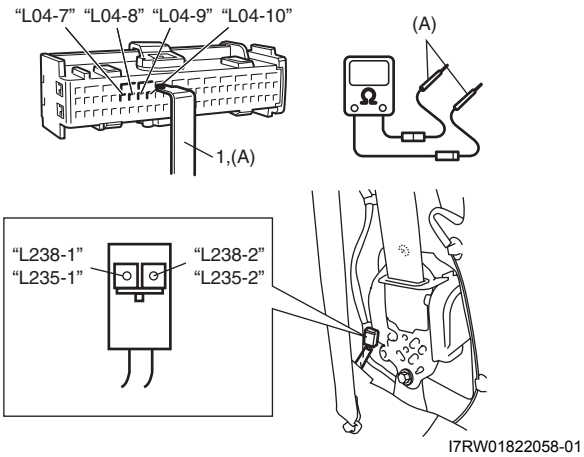 *Is each measured resistance 1Ω or less?*	Substitute a known-good SDM and recheck.	Repair open or high resistance wire in defective circuit.

NOTE

Upon completion of inspection and repair work, perform the following items.

- **Reconnect all air bag system components and ensure all components are properly mounted.**
- **Clear DTCs referring to “DTC Clearance”, if any.**
- **Repeat “Air Bag Diagnostic System Check” to confirm that the trouble has been corrected.**

DTC B1052 / B1056: Seat Belt Pretensioner Circuit Low Resistance

S7RW0A8204027

DTC B1052: Driver Seat Belt Pretensioner Circuit Low Resistance
DTC B1056: Passenger Seat Belt Pretensioner Circuit Low Resistance

Wiring Diagram

Refer to “DTC B1051 / B1055: Seat Belt Pretensioner Circuit High Resistance”.

DTC Detecting Condition and Trouble Area

DTC detecting condition	Trouble area
DTC B1052: Driver seat belt pretensioner circuit is less than 0.9 Ω for more than 4 sec. **DTC B1056:** Passenger seat belt pretensioner circuit is less than 0.9 Ω for more than 4 sec.	• Driver / passenger seat belt pretensioner circuit • Driver / passenger seat belt pretensioner • SDM

DTC Troubleshooting

Step	Action	Yes	No
1	*Was “Air Bag Diagnostic System Check Flow” performed?*	Go to Step 2.	Go to “Air Bag Diagnostic System Check Flow”.
2	**Seat belt pretensioner circuit check** 1) With ignition switch turned OFF, remove center pillar lower trim of applicable side and disconnect applicable seat belt pretensioner connector “L283” or “L285”. 2) Check for proper connection to applicable seat belt pretensioner at terminals in “L283” or “L285” connector. 3) If OK, then connect special tools (A), (B) and (C) to “L283” or “L285” connector disconnected in Step 1). **Special tool** **(A): 09932–76010** **(B): 09932–75010** **(C): 09932–78310** 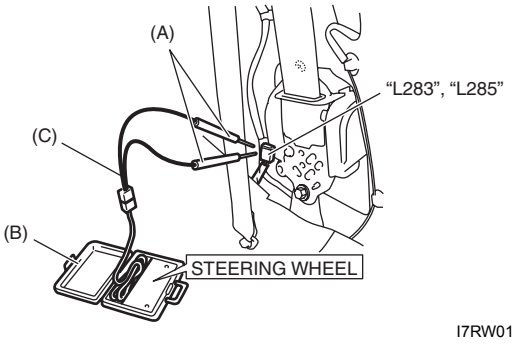 I7RW01822057-01 4) Check SDM for DTC. *With ignition switch turned ON, is DTC B1052 or B1056 still indicated?*	Go to Step 3.	Replace defective seat belt pretensioner referring to “Front Seat Belt Removal and Installation in Section 8A”.

Step	Action	Yes	No
3	**Seat belt pretensioner circuit resistance check** 1) Disconnect special tools from applicable seat belt pretensioner connector. 2) Disconnect SDM connector “L04”. 3) Check for proper connection to SDM at terminals “L04-7” and “L04-8” (for DTC B1052) or terminals “L04-9” and “L04-10” (for DTC B1056). 4) If OK, release shorting bar in SDM connector inserting release tool (1) included in special tool (A). 5) Measure resistance between “L04-7” and “L04-8” (for DTC B1052) or between “L04-9” and “L04-10” (for DTC B1056). 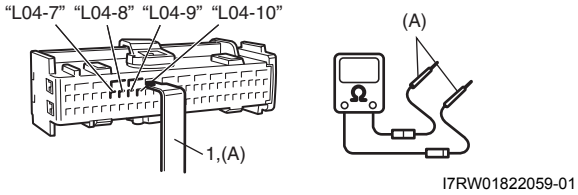 *Is each measured resistance infinity?*	Substitute a known-good SDM and recheck.	Repair short wire in defective circuit.

NOTE

Upon completion of inspection and repair work, perform the following items.

- **Reconnect all air bag system components and ensure all components are properly mounted.**
- **Clear DTCs referring to “DTC Clearance”, if any.**
- **Repeat “Air Bag Diagnostic System Check” to confirm that the trouble has been corrected.**

DTC B1053 / B1057: Seat Belt Pretensioner Shorted to Ground

S7RW0A8204028

DTC B1053: Driver Seat Belt Pretensioner Shorted to Ground
DTC B1057: Passenger Seat Belt Pretensioner Shorted to Ground

Wiring Diagram

Refer to “DTC B1051 / B1055: Seat Belt Pretensioner Circuit High Resistance”.

DTC Detecting Condition and Trouble Area

DTC detecting condition	Trouble area
DTC B1053: Driver seat belt pretensioner circuit has been shorted to ground for more than 4 sec. **DTC B1057:** Passenger seat belt pretensioner circuit has been shorted to ground for more than 4 sec.	• Driver / passenger seat belt pretensioner circuit • SDM

DTC Troubleshooting

Step	Action	Yes	No
1	*Was “Air Bag Diagnostic System Check Flow” performed?*	Go to Step 2.	Go to “Air Bag Diagnostic System Check Flow”.
2	**Seat belt pretensioner circuit check** 1) With ignition switch turned OFF, remove center pillar lower trim of applicable side and disconnect applicable seat belt pretensioner connector “L283” or “L285”. 2) Disconnect SDM connector “L04”. 3) Check for proper connection to applicable seat belt pretensioner at terminals in “L283” or “L285”. 4) Check for proper connection to SDM at terminals “L04-7” and “L04-8” (for DTC B1053) or terminals “L04-9” and “L04-10” (for DTC B1057). 5) If OK, release shorting bar in SDM connector inserting release tool (1) included in special tool (A). 6) Measure resistance between “L04-7” and body ground, and between “L04-8” and body ground (for DTC B1053). 7) Measure resistance between “L04-9” and body ground, and between “L04-10” and body ground (for DTC B1057). **Special tool** **(A): 09932–76010** 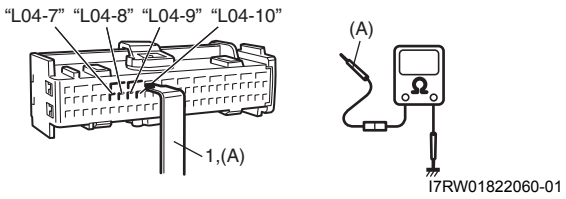 *Is each measured resistance infinity?*	Substitute a known-good SDM and recheck.	Repair short to ground in defective circuit.

NOTE

Upon completion of inspection and repair work, perform the following items.

- **Reconnect all air bag system components and ensure all components are properly mounted.**
- **Clear DTCs referring to “DTC Clearance”, if any.**
- **Repeat “Air Bag Diagnostic System Check” to confirm that the trouble has been corrected.**

DTC B1054 / B1058: Seat Belt Pretensioner Circuit Shorted to Power Supply

S7RW0A8204029

DTC B1054: Driver Seat Belt Pretensioner Circuit Shorted to Power Supply
DTC B1058: Passenger Seat Belt Pretensioner Circuit Shorted to Power Supply

Wiring Diagram

Refer to “DTC B1051 / B1055: Seat Belt Pretensioner Circuit High Resistance”.

DTC Detecting Condition and Trouble Area

DTC detecting condition	Trouble area
DTC B1054: Driver seat belt pretensioner circuit has been shorted to power supply for more than 4 sec. **DTC B1058:** Passenger seat belt pretensioner circuit has been shorted to power supply for more than 4 sec.	• Driver / passenger seat belt pretensioner circuit • SDM

DTC Troubleshooting

Step	Action	Yes	No
1	*Was “Air Bag Diagnostic System Check Flow” performed?*	Go to Step 2.	Go to “Air Bag Diagnostic System Check Flow”.
2	**Seat belt pretensioner circuit check** 1) With ignition switch turned OFF, remove center pillar lower trim of applicable side and disconnect applicable seat belt pretensioner connector “L283” or “L285”. 2) Disconnect SDM connector “L04”. 3) Check for proper connection to applicable seat belt pretensioner at terminals in “L283” or “L285”. 4) Check for proper connection to SDM at terminals “L04-7” and “L04-8” (for DTC B1054) or terminals “L04-9” and “L04-10” (for DTC B1058). 5) If OK, release shorting bar in SDM connector inserting release tool (1) included in special tool (A). 6) With ignition switch turned ON, measure voltage between “L04-7” and body ground, and between “L04-8” and body ground (for DTC B1054). 7) Measure voltage between “L04-9” and body ground and between “L04-10” and body ground (for DTC B1058). **Special tool** **(A): 09932–76010** 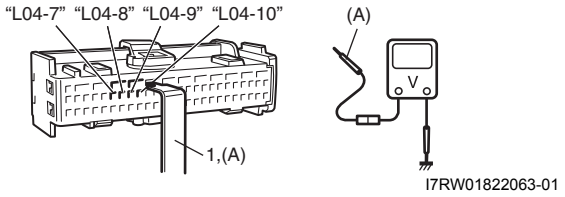 *Is each measured voltage 0 V?*	Substitute a known-good SDM and recheck.	Repair short to power supply in defective circuit.

NOTE

Upon completion of inspection and repair work, perform the following items.

- **Reconnect all air bag system components and ensure all components are properly mounted.**
- **Clear DTCs referring to “DTC Clearance”, if any.**
- **Repeat “Air Bag Diagnostic System Check” to confirm that the trouble has been corrected.**

DTC B1061 / B1065: Side-Air Bag Circuit High Resistance

S7RW0A8204030

DTC B1061: Driver Side-Air Bag Circuit High Resistance
DTC B1065: Passenger Side-Air Bag Circuit High Resistance

Wiring Diagram

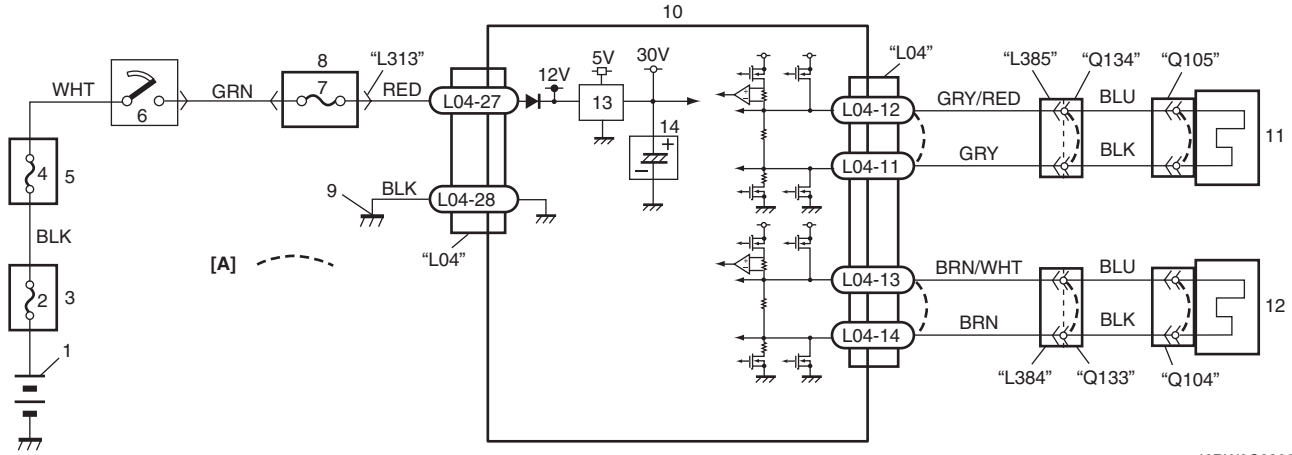

I6RW0C820011-01

[A]: Shorting bar	5. Individual circuit fuse box No.1	10. SDM
1. Battery	6. Ignition switch	11. Driver side-air bag (inflator) model
2. Fuse	7. "A/B" fuse	12. Passenger side-air bag (inflator) module
3. Main fuse box	8. Junction block assembly	13. DC / DC converter
4. "IGN" fuse	9. Ground for air bag system	14. Back up capacitor

DTC Detecting Condition and Trouble Area

DTC detecting condition	Trouble area
DTC B1061: Driver side-air bag circuit is more than 3.7 Ω for more than 4 sec. **DTC B1065:** Passenger side-air bag circuit is more than 3.7 Ω for more than 4 sec.	• Driver / passenger side-air bag circuit • Driver / passenger side-air bag module • SDM

DTC Troubleshooting

Step	Action	Yes	No
1	*Was “Air Bag Diagnostic System Check Flow” performed?*	Go to Step 2.	Go to “Air Bag Diagnostic System Check Flow”.
2	**Side-air bag circuit check** 1) Remove applicable driver / passenger side-air bag (inflator) module from seat back referring to “Side-Air Bag (Inflator) Module Removal and Installation”. 2) Check for proper connection to applicable side-air bag (inflator) module at terminal in connector “Q104” or “Q105”. 3) If OK, then connect special tools (A), (B) and (C) to applicable side-air bag (inflator) connector “Q104” or “Q105”. **Special tool** **(A): 09932–76010** **(B): 09932–75010** **(C): 09932–78310** 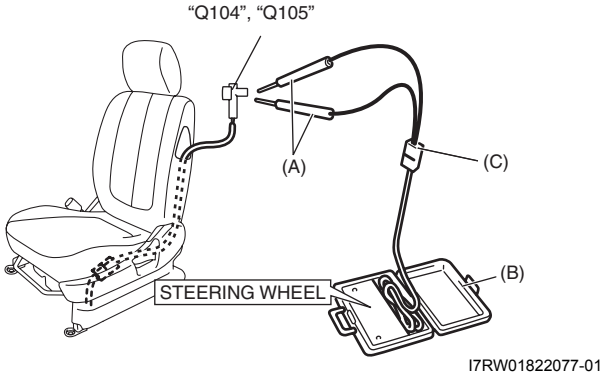 4) Check SDM for DTC. *With ignition switch turned ON, is DTC B1061 or B1065 still indicated?*	Go to Step 3.	Replace side-air bag (inflator) module referring to “Side-Air Bag (Inflator) Module Removal and Installation”.

Step	Action	Yes	No
3	**Side-air bag circuit check** 1) With ignition switch turned OFF, disconnect special tools from applicable side-air bag (inflator) connector “Q104” or “Q105”. 2) Disconnect SDM connector “L04”. 3) Check for proper connection to SDM connector at terminal “L04-11” and “L04-12” (for DTC B1061) or terminal “L04-13” and “L04-14” (for DTC B1065). 4) If OK, release shorting bar in SDM connector inserting release tool (1) included in special tool (A). **Special tool** **(A): 09932–76010** 5) Measure resistance between “L04-12” and “Q105-1” terminals, between “L04-11” and “Q105-2” terminals (for DTC B1061). 6) Measure resistance between “L04-13” and “Q104-1” terminals, between “L04-14” and “Q104-2” terminals (for DTC B1065). 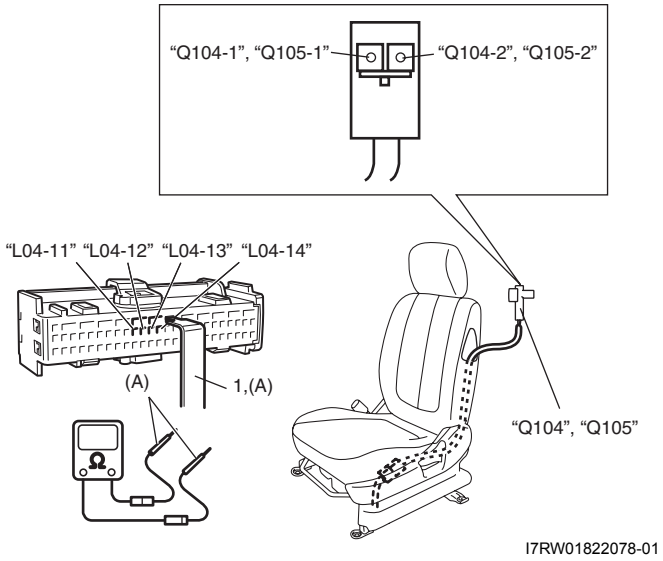 *Is each measured resistance 1Ω or less?*	Substitute a known-good SDM and recheck.	Go to Step 4.

Step	Action	Yes	No
4	**Floor harness circuit check** 1) Disconnect applicable “L384” or “L385” connector under front cushion. 2) Check for proper connection to floor harness connector at terminal “L385-1” and “L385-2” (for DTC B1061) or terminal “L384-1” and “L384-2” (for DTC B1065). 3) If OK, release shorting bar in SDM connector inserting release tool (1) included in special tool (A). **Special tool** **(A): 09932–76010** 4) Measure resistance between “L04-12” and “L385-1” terminals, between “L04-11” and “L385-2” terminals (for DTC B1061). 5) Measure resistance between “L04-13” and “L384-1” terminals, between “L04-14” and “L384-2” terminals (for DTC B1065). 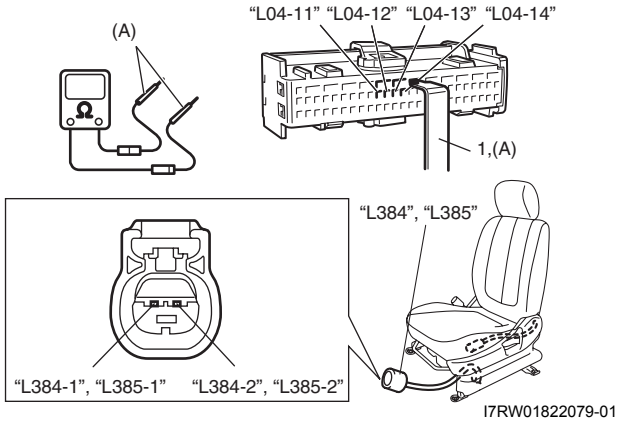 *Is each measured resistance 1Ω or less?*	DTC B1061: Repair high resistance or open wire in “BLU” or “BLK” circuit at driver side-air bag harness. DTC B1065: Repair high resistance or open wire in “BLU” or “BLK” circuit at passenger side-air bag harness.	DTC B1061: Repair high resistance or open wire in “GRY/RED” or “GRY” circuit at floor harness. DTC B1065: Repair high resistance or open wire in “BRN/WHT” or “BRN” circuit at floor harness.

NOTE

Upon completion of inspection and repair work, perform the following items.

- **Reconnect all air bag system components, ensure all components are properly mounted.**
- **Clear DTCs referring to “DTC Clearance”, if any.**
- **Repeat “Air Bag Diagnostic System Check” to confirm that the trouble has been corrected.**

DTC B1062 / B1066: Side-Air Bag Circuit Low Resistance

S7RW0A8204031

DTC B1062: Driver Side-Air Bag Circuit Low Resistance
DTC B1066: Passenger Side-Air Bag Circuit Low Resistance

Wiring Diagram

Refer to “DTC B1061 / B1065: Side-Air Bag Circuit High Resistance”.

DTC Detecting Condition and Trouble Area

DTC detecting condition	Trouble area
DTC B1062: Driver side-air bag circuit is less than 1.0 Ω for more than 4 sec. **DTC B1066:** Passenger side-air bag circuit is less than 1.0 Ω for more than 4 sec.	• Driver / passenger side-air bag circuit • Driver / passenger side-air bag module • SDM

DTC Troubleshooting

Step	Action	Yes	No
1	*Was “Air Bag Diagnostic System Check Flow” performed?*	Go to Step 2.	Go to “Air Bag Diagnostic System Check Flow”.
2	**Side-air bag circuit check** 1) Remove applicable driver / passenger side-air bag (inflator) module from seat back referring to “Side-Air Bag (Inflator) Module Removal and Installation”. 2) Check for proper connection to applicable side-air bag (inflator) module at terminal in connector “Q104” or “Q105”. 3) If OK, then connect special tools (A), (B) and (C) to applicable side-air bag (inflator) connector “Q104” or “Q105”. **Special tool** **(A): 09932–76010** **(B): 09932–75010** **(C): 09932–78310** 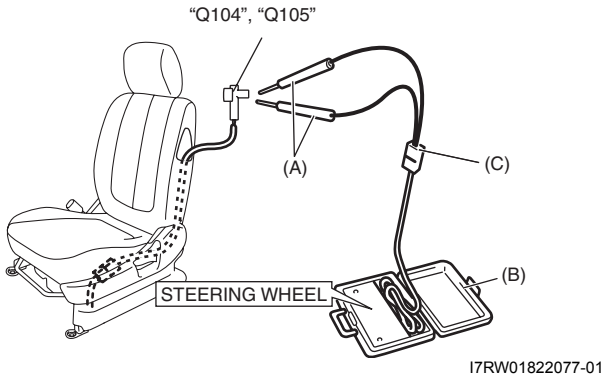 4) Check SDM for DTC. *With ignition switch turned ON, is DTC B1062 or B1066 still indicated?*	Go to Step 3.	Replace side-air bag (inflator) module referring to “Side-Air Bag (Inflator) Module Removal and Installation”.

Step	Action	Yes	No
3	**Side-air bag circuit check** 1) With ignition switch turned OFF, disconnect special tools from applicable side-air bag (inflator) connector “Q104” or “Q105”. 2) Disconnect SDM connector “L04”. 3) Check for proper connection to SDM connector at terminal “L04-11” and “L04-12” (for DTC B1062) or terminal “L04-13” and “L04-14” (for DTC B1066). 4) If OK, release shorting bar in SDM connector inserting release tool (1) included in special tool (A). **Special tool** **(A): 09932–76010** 5) Measure resistance between “L04-11” and “L04-12” terminals (for DTC B1062) or between “L04-13” and “L04-14” terminals (for DTC B1066). 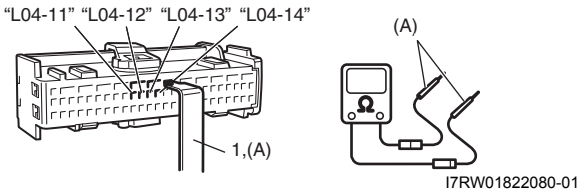 *Is each measured resistance infinity?*	Substitute a known-good SDM and recheck.	Go to Step 4.
4	**Floor harness circuit check** 1) Disconnect applicable “L384” or “L385” connector under front cushion. 2) Check for proper connection to applicable floor harness connector at terminal in connector “L384” or “L385”. 3) If OK, release shorting bar in SDM connector inserting release tool (1) included in special tool (A). **Special tool** **(A): 09932–76010** 4) Measure resistance between “L04-11” and “L04-12” terminals (for DTC B1062) or between “L04-13” and “L04-14” terminals (for DTC B1066). 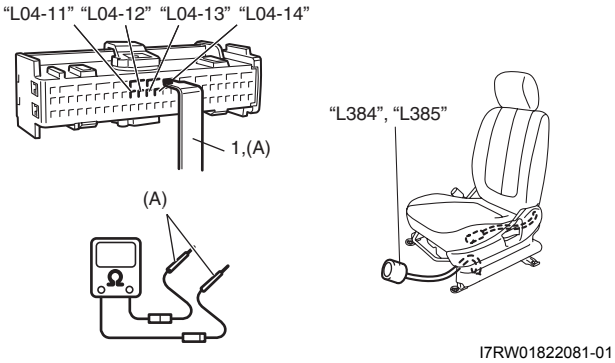 *Is each measured resistance infinity?*	DTC B1062: Repair “BLU” circuit for short to “BLK” circuit at driver side-air bag harness. DTC B1066: Repair “BLU” circuit for short to “BLK” circuit at passenger side-air bag harness.	DTC B1062: Repair “GRY/RED” circuit for short to “GRY” circuit at floor harness. DTC B1066: Repair “BRN/WHT” circuit for short to “BRN” circuit at floor harness.

NOTE

Upon completion of inspection and repair work, perform the following items.

- **Reconnect all air bag system components, ensure all components are properly mounted.**
- **Clear DTCs referring to "DTC Clearance", if any.**
- **Repeat "Air Bag Diagnostic System Check" to confirm that the trouble has been corrected.**

DTC B1063 / B1067: Side-Air Bag Circuit Shorted to Ground

S7RW0A8204032

DTC B1063: Driver Side-Air Bag Circuit Shorted to Ground
DTC B1067: Passenger Side-Air Bag Circuit Shorted to Ground

Wiring Diagram

Refer to "DTC B1061 / B1065: Side-Air Bag Circuit High Resistance".

DTC Detecting Condition and Trouble Area

DTC detecting condition	Trouble area
DTC B1063: Driver side-air bag circuit has been shorted to ground for more than 4 sec. **DTC B1067:** Passenger side-air bag circuit has been shorted to ground for more than 4 sec.	• Driver / passenger side-air bag circuit • SDM

DTC Troubleshooting

Step	Action	Yes	No
1	*Was “Air Bag Diagnostic System Check Flow” performed?*	Go to Step 2.	Go to “Air Bag Diagnostic System Check Flow”.
2	**Side-air bag circuit check** 1) Remove applicable driver / passenger side-air bag (inflator) module from seat back referring to “Side-Air Bag (Inflator) Module Removal and Installation”. 2) Check for proper connection to applicable side-air bag (inflator) module at terminal in connector “Q104” or “Q105”. 3) Disconnect SDM connector “L04”. 4) Check for proper connection to SDM connector at terminal “L04-11” and “L04-12” (for DTC B1063) or terminal “L04-13” and “L04-14” (for DTC B1067). 5) If OK, release shorting bar in SDM connector inserting release tool (1) included in special tool (A). **Special tool** **(A): 09932–76010** 6) Measure resistance between “L04-11” terminal and body ground, and between “L04-12” terminal and body ground (for DTC B1063). 7) Measure resistance between “L04-13” terminal and body ground, and between “L04-14” terminal and body ground (for DTC B1067). 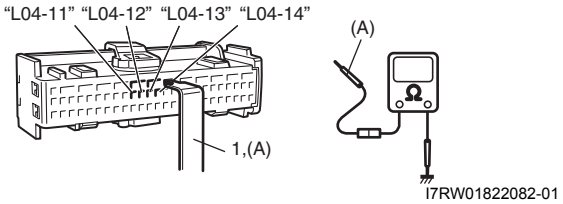 *Is each measured resistance infinity?*	Substitute a known-good SDM and recheck.	Go to Step 3.

Step	Action	Yes	No
3	**Floor harness circuit check** 1) Disconnect applicable “L384” or “L385” connector under front cushion. 2) Check for proper connection to applicable floor harness connector at terminal in connector “L384” or “L385”. 3) If OK, release shorting bar in SDM connector inserting release tool (1) included in special tool (A). **Special tool** **(A): 09932–76010** 4) Measure resistance between “L04-11” terminal and body ground, and between “L04-12” terminal and body ground (for DTC B1063). 5) Measure resistance between “L04-13” terminal and body ground, and between “L04-14” terminal and body ground (for DTC B1067). 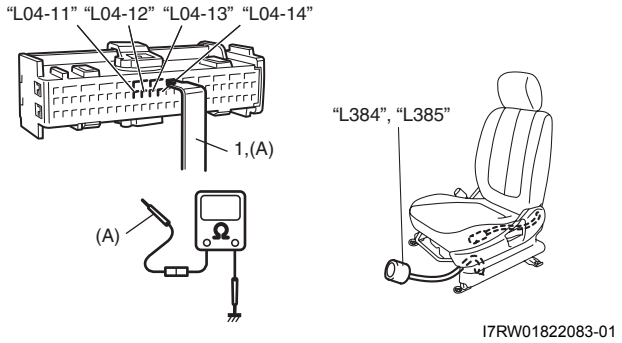 *Is each measured resistance infinity?*	DTC B1063: Repair “BLU” circuit or “BLK” circuit for short to ground at driver side-air bag harness. DTC B1067: Repair “BLU” circuit or “BLK” circuit for short to ground at passenger side-air bag harness.	DTC B1063: Repair “GRY/RED” circuit or “GRY” circuit for short to ground at floor harness. DTC B1067: Repair “BRN/WHT” circuit or “BRN” circuit for short to ground at floor harness.

NOTE

Upon completion of inspection and repair work, perform the following items.

- **Reconnect all air bag system components, ensure all components are properly mounted.**
- **Clear DTCs referring to “DTC Clearance”, if any.**
- **Repeat “Air Bag Diagnostic System Check” to confirm that the trouble has been corrected.**

DTC B1064 / B1068: Side-Air Bag Circuit Shorted to Power Supply

S7RW0A8204033

DTC B1064: Driver Side-Air Bag Circuit Shorted to Power Supply
DTC B1068: Passenger Side-Air Bag Circuit Shorted to Power Supply

Wiring Diagram

Refer to “DTC B1061 / B1065: Side-Air Bag Circuit High Resistance”.

DTC Detecting Condition and Trouble Area

DTC detecting condition	Trouble area
DTC B1064: Driver side-air bag circuit has been shorted to power supply for more than 4 sec. **DTC B1068:** Passenger side-air bag circuit has been shorted to power supply for more than 4 sec.	• Driver / passenger side-air bag circuit • SDM

DTC Troubleshooting

Step	Action	Yes	No
1	*Was “Air Bag Diagnostic System Check Flow” performed?*	Go to Step 2.	Go to “Air Bag Diagnostic System Check Flow”.
2	**Side-air bag circuit check** 1) Remove applicable driver / passenger side-air bag (inflator) module from seat back referring to “Side-Air Bag (Inflator) Module Removal and Installation”. 2) Disconnect SDM connector “L04”. 3) Check for proper connection to applicable side-air bag (inflator) module at terminal in connector “Q104” or “Q105”. 4) Check for proper connection to SDM connector at terminal “L04-11” and “L04-12” (for DTC B1064) or terminal “L04-13” and “L04-14” (for DTC B1068). 5) If OK, release shorting bar in SDM connector inserting release tool (1) included in special tool (A). **Special tool** **(A): 09932–76010** 6) With ignition switch turned ON, measure voltage between “L04-11” terminal and body ground, and between “L04-12” terminal and body ground (for DTC B1064). 7) Measure voltage between “L04-13” terminal and body ground, and between “L04-14” terminal and body ground (for DTC B1068). 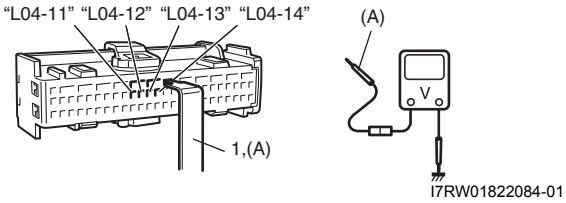 *Is each measured voltage 0 V?*	Substitute a known-good SDM and recheck.	Go to Step 3.

Step	Action	Yes	No
3	**Floor harness circuit check** 1) Disconnect applicable “L384” or “L385” connector under front cushion. 2) Check for proper connection to applicable floor harness connector at terminal in connector “L384” or “L385”. 3) If OK, release shorting bar in SDM connector inserting release tool (1) included in special tool (A). **Special tool** **(A): 09932–76010** 4) With ignition switch turned ON, measure voltage between “L04-11” terminal and body ground, and between “L04-12” terminal and body ground (for DTC B1064). 5) Measure voltage between “L04-13” terminal and body ground, and between “L04-14” terminal and body ground (for DTC B1068). 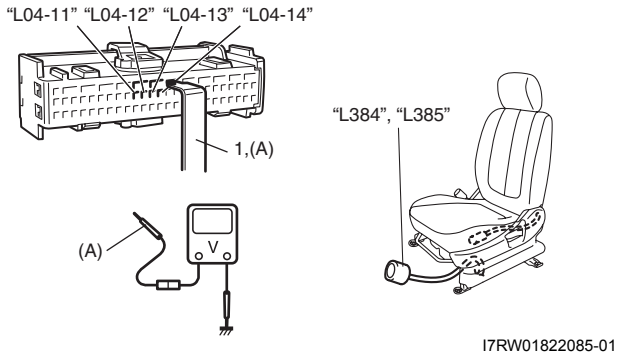 *Is each measured voltage 0 V?*	DTC B1064: Repair “BLU” circuit or “BLK” circuit for short to power supply circuit at driver side-air bag harness. DTC B1068: Repair “BLU” circuit or “BLK” circuit for short to power supply circuit at passenger side-air bag harness.	DTC B1064: Repair “GRY/RED” circuit or “GRY” circuit for short to power supply circuit at floor harness. DTC B1068: Repair “BRN/WHT” circuit or “BRN” circuit for short to power supply circuit at floor harness.

NOTE

Upon completion of inspection and repair work, perform the following items.

- **Reconnect all air bag system components, ensure all components are properly mounted.**
- **Clear DTCs referring to “DTC Clearance”, if any.**
- **Repeat “Air Bag Diagnostic System Check” to confirm that the trouble has been corrected.**

DTC B1071: Driver Forward Impact-Sensor Communication Data Inconsistent

S7RW0A8204034

DTC Detecting Condition and Trouble Area

DTC detecting condition	Trouble area
Forward impact-sensor has been communicated with no response or inconsistent ID code for more than 4 sec.	• Forward impact-sensor • Forward impact-sensor circuit • SDM

DTC Troubleshooting

Step	Action	Yes	No
1	*Was "Air Bag Diagnostic System Check Flow" performed?*	Go to Step 2.	Go to "Air Bag Diagnostic System Check Flow".
2	**DTC check** 1) Connect scan tool to DLC with ignition switch turned OFF. 2) Turn ON ignition switch and check SDM for DTC. *Are there any DTC(s) B1073, B1074?*	Go to applicable DTC diag. flow.	Replace defective forward impact-sensor and recheck. If this DTC still detected, replace SDM.

NOTE

Upon completion of inspection and repair work, perform the following items.

- **Reconnect all air bag system components and ensure all components are properly mounted.**
- **Clear DTCs referring to "DTC Clearance", if any.**
- **Repeat "Air Bag Diagnostic System Check" to confirm that the trouble has been corrected.**

DTC B1072: Driver Forward Impact-Sensor Communication Data Invalid

S7RW0A8204035

DTC Detecting Condition and Trouble Area

DTC detecting condition	Trouble area
Forward impact-sensor has been communicated with invalid data for more than 4 sec.	• Forward impact-sensor • SDM

DTC Troubleshooting

Step	Action	Yes	No
1	*Was "Air Bag Diagnostic System Check Flow" performed?*	Go to Step 2.	Go to "Air Bag Diagnostic System Check Flow".
2	**DTC check** 1) Connect scan tool to DLC with ignition switch turned OFF. 2) Turn ON ignition switch and check SDM for DTC. *Are there any DTC(s) B1071, B1073, B1074?*	Go to applicable DTC diag. flow.	Replace defective forward impact-sensor and recheck. If this DTC still detected, replace SDM.

NOTE

Upon completion of inspection and repair work, perform the following items.

- **Reconnect all air bag system components and ensure all components are properly mounted.**
- **Clear DTCs referring to "DTC Clearance", if any.**
- **Repeat "Air Bag Diagnostic System Check" to confirm that the trouble has been corrected.**

DTC B1073: Driver Forward Impact-Sensor Circuit Shorted to Ground

S7RW0A8204036

Wiring Diagram

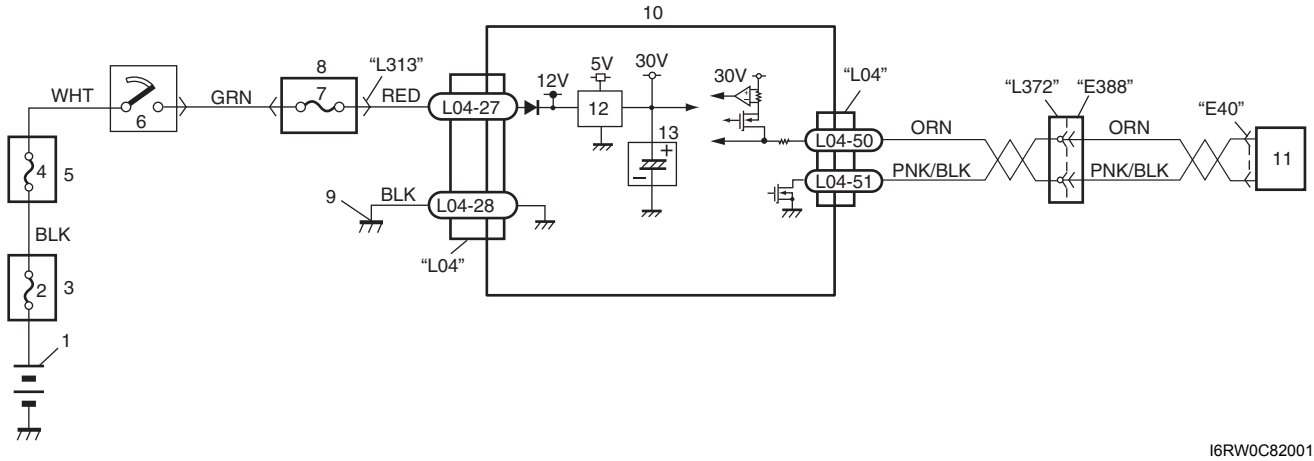

I6RW0C820012-01

1. Battery	5. Individual circuit fuse box No.1	9. Ground for air bag system	13. Back up capacitor
2. Fuse	6. Ignition switch	10. SDM	
3. Main fuse box	7. "A/B" fuse	11. Driver forward impact-sensor	
4. "IGN" fuse	8. Junction block assembly	12. DC / DC converter	

DTC Detecting Condition and Trouble Area

DTC detecting condition	Trouble area
Forward impact-sensor circuit has been shorted to ground for more than 4 sec.	• Forward impact-sensor • Forward impact-sensor circuit • SDM

DTC Troubleshooting

Step	Action	Yes	No
1	*Was "Air Bag Diagnostic System Check Flow" performed?*	Go to Step 2.	Go to "Air Bag Diagnostic System Check Flow".
2	**Forward impact-sensor circuit check** 1) Disconnect forward impact-sensor connector "E40". 2) Disconnect SDM connector "L04". 3) Check for proper connection to SDM connector at terminals "L04-50" and "L04-51". 4) Measure resistance between "L04-50" terminal and body ground. **Special tool** **(A): 09932–76010** 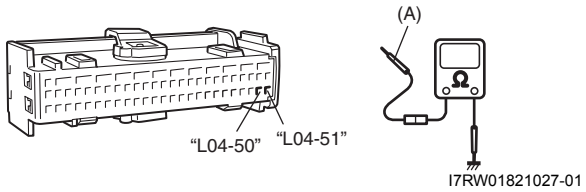 I7RW01821027-01 *Is each measured resistance infinity?*	Go to Step 3.	Repair short to ground in defective circuit.

Step	Action	Yes	No
3	**Forward impact-sensor circuit check** 1) Measure resistance between “L04-50” and “L04-51” terminals. **Special tool** **(A): 09932–76010** 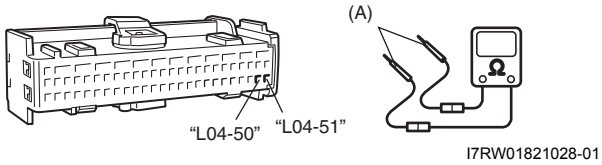 *Is each measured resistance infinity?*	Replace defective forward impact-sensor, and recheck. If this DTC is still detected, replace SDM.	Repair short to ground in defective circuit.

NOTE

Upon completion of inspection and repair work, perform the following items.

- **Reconnect all air bag system components and ensure all components are properly mounted.**
- **Clear DTCs referring to “DTC Clearance”, if any.**
- **Repeat “Air Bag Diagnostic System Check” to confirm that the trouble has been corrected.**

DTC B1074: Driver Forward Impact-Sensor Circuit Open

S7RW0A8204037

Wiring Diagram

Refer to “DTC B1073: Driver Forward Impact-Sensor Circuit Shorted to Ground”.

DTC Detecting Condition and Trouble Area

DTC detecting condition	Trouble area
Forward impact-sensor circuit has been shorted to power circuit or opened for more than 4 sec.	• Forward impact-sensor • Forward impact-sensor circuit • SDM

DTC Troubleshooting

Step	Action	Yes	No
1	*Was "Air Bag Diagnostic System Check Flow" performed?*	Go to Step 2.	Go to "Air Bag Diagnostic System Check Flow".
2	**Forward impact-sensor circuit check** 1) Disconnect forward impact-sensor connector "E40". 2) Disconnect SDM connector "L04". 3) Check for proper connection to SDM connector at terminals "L04-50" and "L04-51". 4) Check for proper connection to forward impact-sensor connector at terminals "E40-1" and "E40-2". 5) Measure resistance between "L04-50" and "E40-2" terminals, between "L04-51" and "E40-1" terminals. **Special tool** **(A): 09932–76010** 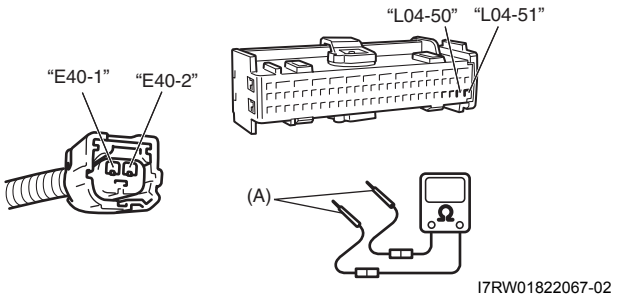 *Is each measured resistance 1 Ω or less?*	Go to Step 3.	Repair high resistance or open in defective circuit.
3	**Forward impact-sensor circuit check** 1) With ignition turned ON, measure voltage between "L04-50" terminal and body ground, between "L04-51" terminal and body ground. **Special tool** **(A): 09932–76010** 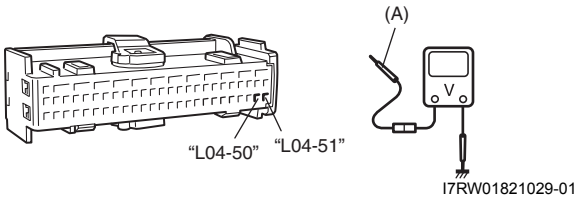 *Is each measured voltage 0 V?*	Replace forward impact-sensor, and recheck. If DTC still detected, replace SDM.	Repair short to power supply circuit or other circuit in defective circuit.

NOTE

Upon completion of inspection and repair work, perform the following items.

- **Reconnect all air bag system components and ensure all components are properly mounted.**
- **Clear DTCs referring to "DTC Clearance", if any.**
- **Repeat "Air Bag Diagnostic System Check" to confirm that the trouble has been corrected.**

DTC B1081 / B1091: Side Impact-Sensor No Response

S7RW0A8204038

DTC B1081: Driver Side Impact-Sensor No Response
DTC B1091: Passenger Side Impact-Sensor No Response

DTC Detecting Condition and Trouble Area

DTC detecting condition	Trouble area
DTC B1081: Driver side impact-sensor has been communicated with no response for more than 4 sec. **DTC B1091:** Passenger side impact-sensor has been communicated with no response for more than 4 sec.	• Driver / passenger side impact-sensor circuit • Driver / passenger side impact-sensor • SDM

DTC Troubleshooting

Step	Action	Yes	No
1	*Was "Air Bag Diagnostic System Check Flow" performed?*	Go to Step 2.	Go to "Air Bag Diagnostic System Check Flow".
2	**DTC check** 1) Connect scan tool to DLC with ignition switch turned OFF. 2) Turn ON ignition switch and check SDM for DTC. *Are there any DTCs B1083, B1084 (for DTC B1081) or B1093, B1094 (for DTC B1091)?*	Go to applicable DTC diag. flow.	Replace defective side impact-sensor and recheck. If this DTC still detected, replace SDM.

NOTE

Upon completion of inspection and repair work, perform the following items.

- **Reconnect all air bag system components and ensure all components are properly mounted.**
- **Clear DTCs referring to "DTC Clearance", if any.**
- **Repeat "Air Bag Diagnostic System Check" to confirm that the trouble has been corrected.**

DTC B1082 / B1092: Side Impact-Sensor Communication DATA Invalid

S7RW0A8204039

DTC B1082: Driver Side Impact-Sensor Communication DATA Invalid
DTC B1092: Passenger Side Impact-Sensor Communication DATA Invalid

DTC Detecting Condition and Trouble Area

DTC detecting condition	Trouble area
DTC B1082: Driver side impact-sensor has been communicated with invalid data for more than 4 sec. **DTC B1092:** Passenger side impact-sensor has been communicated with invalid data for more than 4 sec.	• Driver / passenger side impact-sensor • SDM

DTC Troubleshooting

Step	Action	Yes	No
1	*Was "Air Bag Diagnostic System Check Flow" performed?*	Go to Step 2.	Go to "Air Bag Diagnostic System Check Flow".
2	**DTC check** 1) Connect scan tool to DLC with ignition switch turned OFF. 2) Turn ON ignition switch and check SDM for DTC. *Are there any DTC(s) B1083, B1084, B1085 (for DTC B1082) or B1093, B1094, B1095 (for DTC B1092)?*	Go to applicable DTC diag. flow.	Replace defective side impact-sensor and recheck. If this DTC still detected, replace SDM.

NOTE

Upon completion of inspection and repair work, perform the following items.

- **Reconnect all air bag system components and ensure all components are properly mounted.**
- **Clear DTCs referring to "DTC Clearance", if any.**
- **Repeat "Air Bag Diagnostic System Check" to confirm that the trouble has been corrected.**

DTC B1083 / B1093: Side Impact-Sensor Circuit Shorted to Ground

S7RW0A8204040

DTC B1083: Driver Side Impact-Sensor Circuit Shorted to Ground
DTC B1093: Passenger Side Impact-Sensor Circuit Shorted to Ground

Wiring Diagram

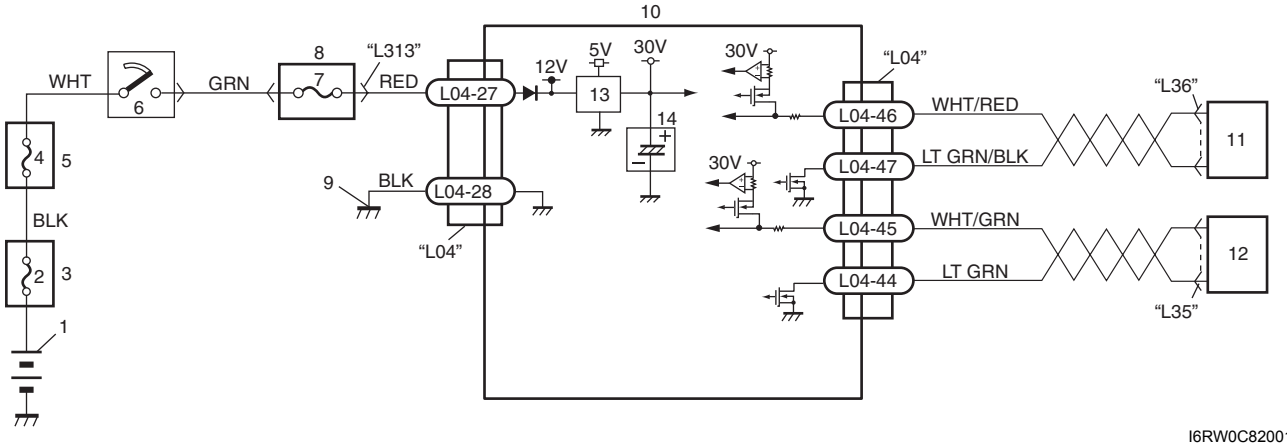

I6RW0C820013-01

1. Battery	5. Individual circuit fuse box No.1	9. Ground for air bag system	13. DC / DC converter
2. Fuse	6. Ignition switch	10. SDM	14. Back up capacitor
3. Main fuse box	7. "A/B" fuse	11. Driver side impact-sensor	
4. "IGN" fuse	8. Junction block assembly	12. Passenger side impact-sensor	

DTC Detecting Condition and Trouble Area

DTC detecting condition	Trouble area
DTC B1083: Driver side impact-sensor circuit has been shorted to ground for more than 4 sec. **DTC B1093:** Passenger side impact-sensor circuit has been shorted to ground for more than 4 sec.	• Driver / passenger side impact-sensor circuit • Driver / passenger side impact-sensor • SDM

DTC Troubleshooting

Step	Action	Yes	No
1	*Was “Air Bag Diagnostic System Check Flow” performed?*	Go to Step 2.	Go to “Air Bag Diagnostic System Check Flow”.
2	**Side impact-sensor circuit check** 1) Disconnect applicable side impact-sensor connector “L35” or “L36”. 2) Disconnect SDM connector “L04”. 3) Check for proper connection to SDM connector at terminals “L04-46” and “L04-47” (for DTC B1083) or terminals “L04-44” and “L04-45” (for DTC B1093). 4) Check for proper connection to applicable side impact-sensor connector at terminals in connector “L35” or “L36”. 5) Measure resistance between “L04-46” terminal and body ground (for DTC B1083) or between “L04-45” terminal and body ground (for DTC B1093). **Special tool** **(A): 09932–76010** 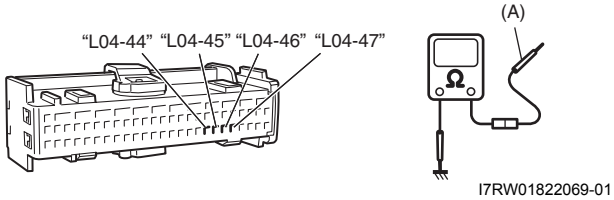 *Is each measured resistance infinity?*	Go to Step 3.	Repair short to ground in defective circuit.
3	**Side impact-sensor circuit check** 1) Measure resistance between “L04-46” and “L04-47” terminals, between “L04-46” and “L04-44” terminals (for DTC B1083). 2) Measure resistance between “L04-45” and “L04-44” terminals, between “L04-45” and “L04-47” terminals (for DTC B1093). **Special tool** **(A): 09932–76010** 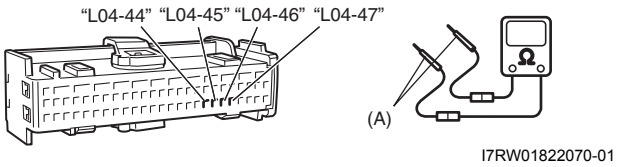 *Is each measured resistance infinity?*	Replace defective side impact-sensor, and recheck. If this DTC is still detected, replace SDM.	Repair short to ground in defective circuit.

NOTE

Upon completion of inspection and repair work, perform the following items.

- **Reconnect all air bag system components and ensure all components are properly mounted.**
- **Clear DTCs referring to “DTC Clearance”, if any.**
- **Repeat “Air Bag Diagnostic System Check” to confirm that the trouble has been corrected.**

DTC B1084 / B1094: Side Impact-Sensor Circuit Open

S7RW0A8204041

DTC B1084: Driver Side Impact-Sensor Circuit Open
DTC B1094: Passenger Side Impact-Sensor Circuit Open

Wiring Diagram

Refer to “DTC B1083 / B1093: Side Impact-Sensor Circuit Shorted to Ground”.

DTC Detecting Condition and Trouble Area

DTC detecting condition	Trouble area
DTC B1084: Driver side impact-sensor circuit has been shorted to power circuit or opened for more than 4 sec. **DTC B1094:** Passenger side impact-sensor circuit has been shorted to power circuit or opened or more than 4 sec.	• Driver / passenger side impact-sensor circuit • Driver / passenger side impact-sensor • SDM

DTC Troubleshooting

Step	Action	Yes	No
1	*Was “Air Bag Diagnostic System Check Flow” performed?*	Go to Step 2.	Go to “Air Bag Diagnostic System Check Flow”.
2	**Side impact-sensor circuit check** 1) Disconnect applicable side impact-sensor connector “L35” or “L36”. 2) Disconnect SDM connector “L04”. 3) Check for proper connection to SDM connector at terminals “L04-46” and “L04-47” (for DTC B1084) or terminals “L04-44” and “L04-45” (for DTC B1094). 4) Check for proper connection to applicable side impact-sensor connector at terminals in connector “L35” or “L36”. 5) Measure resistance between “L04-46” and “L36-2” terminals, between “L04-47” and “L36-1” terminals (for DTC B1084). 6) Measure resistance between “L04-45” and “L35-2” terminals, between “L04-44” and “L35-2” terminals (for DTC B1094). **Special tool** **(A): 09932–76010** 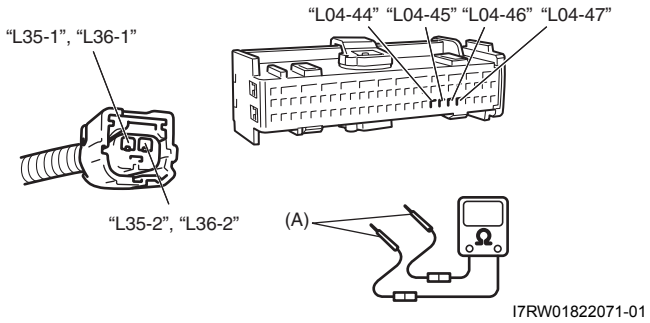 *Is each measured resistance 1 Ω or less?*	Go to Step 3.	Repair open in defective circuit.

Step	Action	Yes	No
3	**Side impact-sensor circuit check** 1) With ignition turn ON, measure voltage between “L04-46” terminal and body ground, between “L04-47” terminal and body ground (for DTC B1084). 2) Measure voltage between “L04-45” terminal and body ground, between “L04-44” terminal and body ground (for DTC B1094). **Special tool** **(A): 09932–76010** 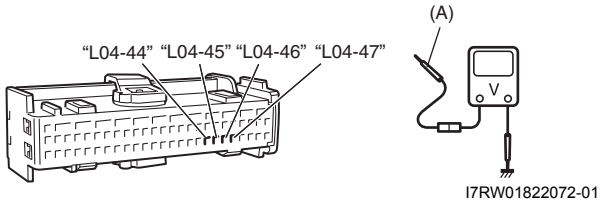 *Is each measured voltage 0 V?*	Replace side impact-sensor, and recheck. If DTC still detected, replace SDM.	Repair short to power supply circuit or other circuit in defective circuit.

NOTE

Upon completion of inspection and repair work, perform the following items.

- **Reconnect all air bag system components and ensure all components are properly mounted.**
- **Clear DTCs referring to “DTC Clearance”, if any.**
- **Repeat “Air Bag Diagnostic System Check” to confirm that the trouble has been corrected.**

DTC B1085 / B1095: Side Impact-Sensor Communication DATA Inconsistent

S7RW0A8204042

DTC B1085: Driver Side Impact-Sensor Communication DATA Inconsistent
DTC B1095: Passenger Side Impact-Sensor Communication DATA Inconsistent

DTC Detecting Condition and Trouble Area

DTC detecting condition	Trouble area
DTC B1085: Driver side impact-sensor has been communicated with inconsistent ID code for more than 4 sec. **DTC B1095:** Passenger side impact-sensor has been communicated with inconsistent ID code for more than 4 sec.	• Driver / passenger side impact-sensor • SDM

DTC Troubleshooting

Step	Action	Yes	No
1	*Was “Air Bag Diagnostic System Check Flow” performed?*	Go to Step 2.	Go to “Air Bag Diagnostic System Check Flow”.
2	**DTC check** 1) Connect scan tool to DLC with ignition switch turned OFF. 2) Turn ON ignition switch and clear DTC referring to “DTC Clearance”. 3) Turn OFF ignition switch and recheck DTC. *Is DTC(s) B1085 and/or B1095 still detected?*	Replace defective side impact-sensor.	Intermittent trouble. Check for intermittent trouble referring to “Inspection of Intermittent and Poor Connections”.

NOTE

Upon completion of inspection and repair work, perform the following items.

- **Reconnect all air bag system components and ensure all components are properly mounted.**
- **Clear DTCs referring to "DTC Clearance", if any.**
- **Repeat "Air Bag Diagnostic System Check" to confirm that the trouble has been corrected.**

DTC B1361 / B1365: Curtain-Air Bag Circuit High Resistance

S7RW0A8204043

DTC B1361: Driver Curtain-Air Bag Circuit High Resistance
DTC B1365: Passenger Curtain-Air Bag Circuit High Resistance

Wiring Diagram

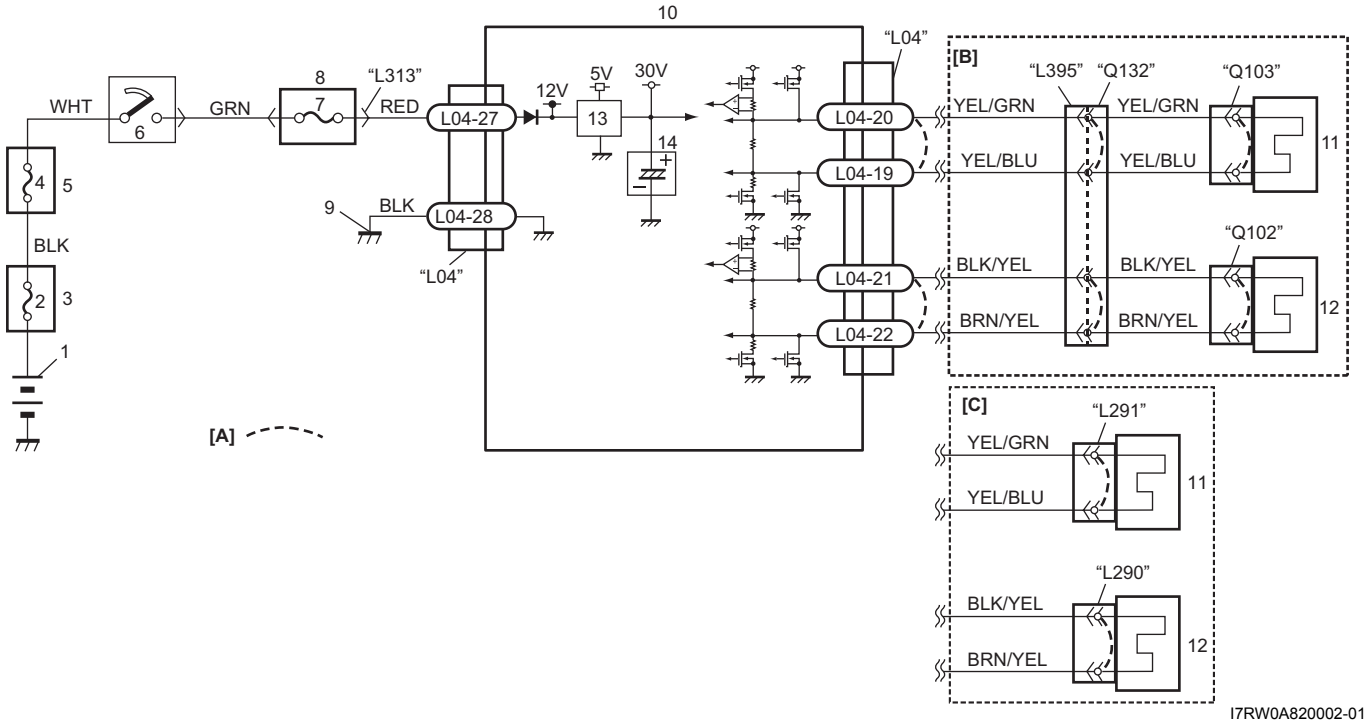

I7RW0A820002-01

[A]: Shorting bar	4. "IGN" fuse	10. SDM
[B]: Hatchback model	5. Individual circuit fuse box No.1	11. Driver side curtain-air bag (inflator) module
[C]: Sedan model	6. Ignition switch	12. Passenger side curtain-air bag (inflator) module
1. Battery	7. "A/B" fuse	13. DC / DC converter
2. Fuse	8. Junction block assembly	14. Back up capacitor
3. Main fuse box	9. Ground for air bag system	

DTC Detecting Condition and Trouble Area

DTC detecting condition	Trouble area
DTC B1361: Driver curtain-air bag circuit is more than 3.8 Ω for more than 4 sec. **DTC B1365:** Passenger curtain-air bag circuit is more than 3.8 Ω for more than 4 sec.	• Driver / passenger curtain-air bag circuit • Driver / passenger curtain-air bag module • SDM

DTC Troubleshooting

Step	Action	Yes	No
1	*Was “Air Bag Diagnostic System Check Flow” performed?*	Go to Step 2.	Go to “Air Bag Diagnostic System Check Flow”.
2	**Driver / passenger curtain-air bag circuit check** 1) With ignition switch turned OFF, remove rear quarter upper trim (hatchback model [A]) or rear pillar inner trim (sedan model [B]) of applicable side and disconnect applicable side curtain-air bag (inflator) module connector. 2) Check for proper connection to applicable side curtain-air bag (inflator) module at terminals in connector “Q102” or “Q103” (hatchback model), “L291” or “L290” (sedan model). 3) If OK, then connect special tools (A), (B) and (C) to applicable side curtain-air bag (inflator) module connector. **Special tool** **(A): 09932–76010** **(B): 09932–75010** **(C): 09932–78310** 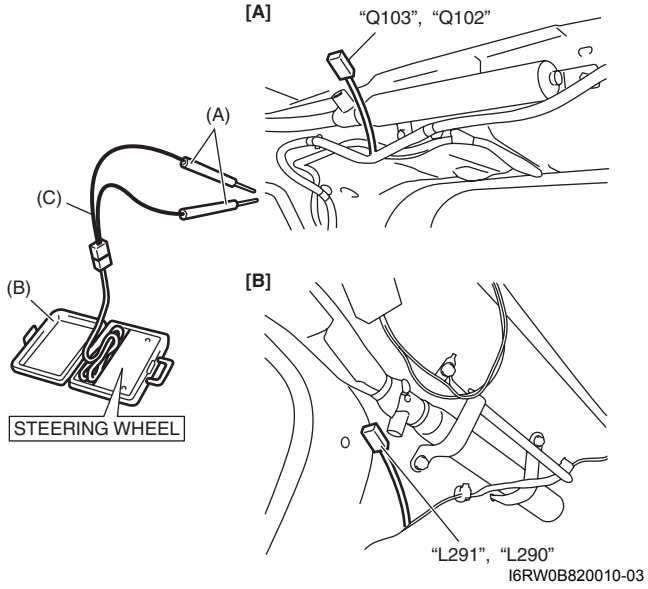 4) Check SDM for DTC. *With ignition switch turned ON, is DTC B1361 or B1365 still indicated?*	Go to Step 3.	Replace side curtain-air bag (inflator) module referring to “Side Curtain-Air Bag (Inflator) Module Removal and Installation”.

Step	Action	Yes	No
3	**Driver / passenger curtain-air bag circuit check** 1) Disconnect special tools from applicable side curtain-air bag connector. 2) With ignition switch turned OFF, disconnect SDM connector “L04”. 3) Check for proper connection to SDM connector at terminal “L04-19” and “L04-20” (for DTC B1361) or terminal “L04-21” and “L04-22” (for DTC B1365). 4) If OK, release shorting bar in SDM connector inserting release tool (1) included in special tool (A). **Special tool** **(A): 09932–76010** 5) Measure resistance at following connector terminals (for DTC B1361). • Between “L04-19” and “Q103-2” terminals, between “L04-20” and “Q103-1” terminals. (hatchback model) • Between “L04-19” and “L291-2” terminals, between “L04-20” and “L291-1” terminals. (sedan model) 6) Measure resistance at following connector terminals (for DTC B1365). • Between “L04-21” and “Q102-1” terminals, between “L04-22” and “Q102-2” terminals. (hatchback model) • Between “L04-21” and “L290-1” terminals, between “L04-22” and “L290-2” terminals. (sedan model) 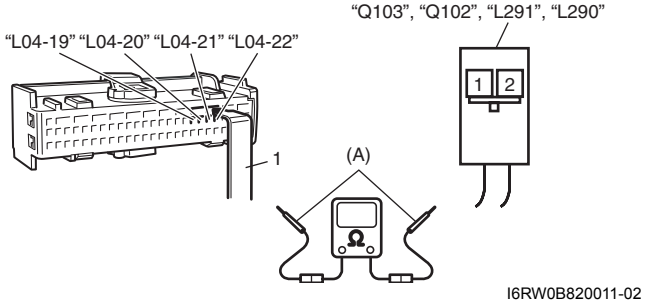 *Is each measured resistance 1Ω or less?*	Substitute a known-good SDM and recheck.	Hatchback model: Go to Step 4. Sedan model: Repair high resistance or open wire in “YEL/GRN” or “YEL/BLU” circuit at floor harness. (for DTCB1361) Repair high resistance or open wire in “BLK/YEL” or “BRN/YEL” circuit at floor harness. (for DTCB1365)

Step	Action	Yes	No
4	**Floor harness circuit check (hatchback model)** 1) With ignition switch turned OFF, remove rear inner trim of right side and disconnect “L395” connector. 2) Check for proper connection to applicable side curtain-air bag at terminal in “L395” connector. 3) If OK, release shorting bar in SDM connector inserting release tool (1) included in special tool (A). **Special tool** **(A): 09932–76010** 4) Measure resistance between “L04-19” and “L395-4” terminals, between “L04-20” and “L395-3” terminals (for DTC B1361). 5) Measure resistance between “L04-21” and “L395-1” terminals, between “L04-22” and “L395-2” terminals (for DTC B1065). 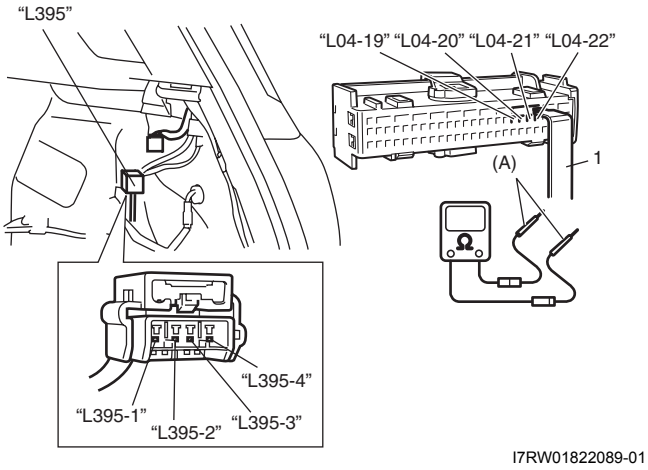 *Is each measured resistance 1Ω or less?*	DTC B1361: Repair high resistance or open wire in “YEL/GRN” or “YEL/BLU” circuit at driver curtain-air bag harness. DTC B1365: Repair high resistance or open wire in “BLK/YEL” or “BRN/YEL” circuit at passenger curtain-air bag harness.	DTC B1361: Repair high resistance or open wire in “YEL/GRN” or “YEL/BLU” circuit at floor harness. DTC B1365: Repair high resistance or open wire in “BLK/YEL” or “BRN/YEL” circuit at floor harness.

NOTE

Upon completion of inspection and repair work, perform the following items.

- **Reconnect all air bag system components, ensure all components are properly mounted.**
- **Clear DTCs referring to “DTC Clearance”, if any.**
- **Repeat “Air Bag Diagnostic System Check” to confirm that the trouble has been corrected.**

DTC B1362 / B1366: Curtain-Air Bag Circuit Low Resistance

S7RW0A8204044

DTC B1362: Driver Curtain-Air Bag Circuit Low Resistance
DTC B1366: Passenger Curtain-Air Bag Circuit Low Resistance

Wiring Diagram

Refer to “DTC B1361 / B1365: Curtain-Air Bag Circuit High Resistance”.

DTC Detecting Condition and Trouble Area

DTC detecting condition	Trouble area
DTC B1362: Driver curtain-air bag circuit is less than 1.0 Ω for more than 4 sec. **DTC B1366:** Passenger curtain-air bag circuit is less than 1.0 Ω for more than 4 sec.	• Driver / passenger curtain-air bag circuit • Driver / passenger curtain-air bag module • SDM

DTC Troubleshooting

Step	Action	Yes	No
1	*Was “Air Bag Diagnostic System Check Flow” performed?*	Go to Step 2.	Go to “Air Bag Diagnostic System Check Flow”.

Step	Action	Yes	No
2	**Driver / passenger curtain-air bag circuit check** 1) With ignition switch turned OFF, remove rear quarter upper trim (hatchback model [A]) or rear pillar inner trim (sedan model [B]) of applicable side and disconnect applicable side curtain-air bag (inflator) module connector. 2) Check for proper connection to applicable side curtain-air bag (inflator) module at terminals in connector “Q103” or “Q102” (hatchback model), “L291” or “L290” (sedan model). 3) If OK, then connect special tools (A), (B) and (C) to applicable side curtain-air bag (inflator) module connector. **Special tool** **(A): 09932–76010** **(B): 09932–75010** **(C): 09932–78310** 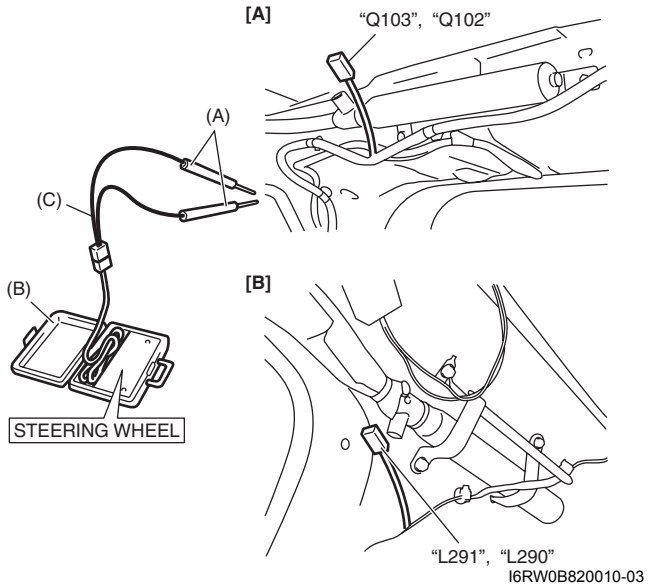 4) Check SDM for DTC. *With ignition switch turned ON, is DTC B1362 or B1366 still indicated?*	Go to Step 3.	Replace side curtain-air bag (inflator) module referring to “Side Curtain-Air Bag (Inflator) Module Removal and Installation”.

Step	Action	Yes	No
3	**Driver / passenger curtain-air bag circuit check** 1) Disconnect special tools from applicable side curtain-air bag connector. 2) With ignition switch turned OFF, disconnect SDM connector “L04”. 3) Check for proper connection to SDM connector at terminal “L04-19” and “L04-20” (for DTC B1362) or terminal “L04-21” and “L04-22” (for DTC B1366). 4) If OK, release shorting bar in SDM connector inserting release tool (1) included in special tool (A). **Special tool** **(A): 09932–76010** 5) Measure resistance between “L04-19” and “L04-20” terminals (for DTC B1362) and between “L04-21” and “L04-22” terminals (for DTC B1366). 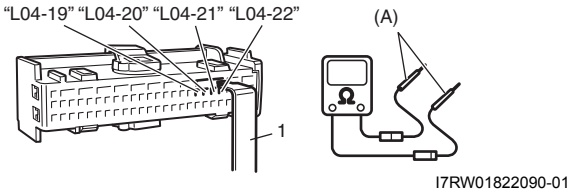 *Is each measured resistance infinity?*	Substitute a known-good SDM and recheck.	Hatchback model: Go to Step 4. Sedan model: Repair “YEL/GRN” circuit for short to “YEL/BLU” circuit at floor harness. (for DTC B1362) Repair “BLK/YEL” circuit for short to “BRN/YEL” circuit at floor harness. (for DTC B1366)
4	**Floor harness circuit check (hatchback model)** 1) With ignition switch turned OFF, remove rear inner trim of right side and disconnect “L395” connector. 2) Check for proper connection to applicable side curtain-air bag at terminal in “L395” connector. 3) If OK, release shorting bar in SDM connector inserting release tool (1) included in special tool (A). **Special tool** **(A): 09932–76010** 4) Measure resistance between “L04-19” and “L04-20” terminals (for DTC B1362) and between “L04-21” and “L04-22” terminals (for DTC B1366). 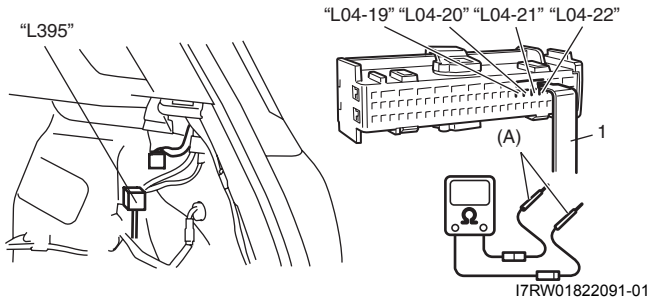 *Is each measured resistance infinity?*	DTC B1362: Repair “YEL/GRN” circuit for short to “YEL/BLU” circuit at driver curtain-air bag harness. DTC B1366: Repair “BLK/YEL” circuit for short to “BRN/YEL” circuit at passenger curtain-air bag harness.	DTC B1362: Repair “YEL/GRN” circuit for short to “YEL/BLU” circuit at floor harness. DTC B1366: Repair “BLK/YEL” circuit for short to “BRN/YEL” circuit at floor harness.

NOTE

Upon completion of inspection and repair work, perform the following items.

- **Reconnect all air bag system components, ensure all components are properly mounted.**
- **Clear DTCs referring to “DTC Clearance”, if any.**
- **Repeat “Air Bag Diagnostic System Check” to confirm that the trouble has been corrected.**

DTC B1363 / B1367: Curtain-Air Bag Circuit Shorted to Ground

S7RW0A8204045

DTC B1363: Driver Curtain-Air Bag Circuit Shorted to Ground
DTC B1367: Passenger Curtain-Air Bag Circuit Shorted to Ground

Wiring Diagram

Refer to “DTC B1361 / B1365: Curtain-Air Bag Circuit High Resistance”.

DTC Detecting Condition and Trouble Area

DTC detecting condition	Trouble area
DTC B1363: Driver curtain-air bag circuit has been shorted to ground for more than 4 sec. **DTC B1367:** Passenger curtain-air bag circuit has been shorted to ground for more than 4 sec.	• Driver / passenger curtain-air bag circuit • SDM

DTC Troubleshooting

Step	Action	Yes	No
1	*Was “Air Bag Diagnostic System Check Flow” performed?*	Go to Step 2.	Go to “Air Bag Diagnostic System Check Flow”.
2	**Driver / passenger curtain-air bag circuit check** 1) With ignition switch turned OFF, remove rear quarter upper trim (hatchback model) or rear pillar inner trim (sedan model) of applicable side and disconnect applicable side curtain-air bag (inflator) module connector. 2) Disconnect SDM connector “L04”. 3) Check for proper connection to SDM connector at terminal “L04-19” and “L04-20” (for DTC B1363) or terminal “L04-21” and “L04-22” (For DTC B1367). 4) Check for proper connection to applicable side curtain-air bag (inflator) module connector at terminal in its connector. 5) If OK, release shorting bar in SDM connector inserting release tool (1) included in special tool (A). **Special tool** **(A): 09932–76010** 6) Measure resistance between “L04-19” terminal and body ground, and between “L04-20” terminal and body ground (for DTC B1363). 7) Measure resistance between “L04-21” terminal and body ground, and between “L04-22” terminal and body ground (for DTC B1367). 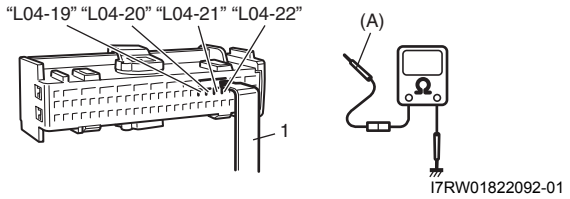 *Is each measured resistance infinity?*	Substitute a known-good SDM and recheck.	Hatchback model: Go to Step 3. Sedan model: Repair “YEL/GRN” or “YEL/BLU” circuit for short to ground at floor harness. (for DTC B1363) Repair “BLK/YEL” or “BRN/YEL” circuit for short to ground at floor harness. (for DTC B1367)

Step	Action	Yes	No
3	**Floor harness circuit check (hatchback model)** 1) With ignition switch turned OFF, remove rear inner trim of right side and disconnect “L395” connector. 2) Check for proper connection to applicable side curtain-air bag at terminal in “L395” connector. 3) If OK, release shorting bar in SDM connector inserting release tool (1) included in special tool (A). **Special tool** **(A): 09932–76010** 4) Measure resistance between “L04-19” terminal and body ground, and between “L04-20” terminal and body ground (for DTC B1363). 5) Measure resistance between “L04-21” terminal and body ground, and between “L04-22” terminal and body ground (for DTC B1367). 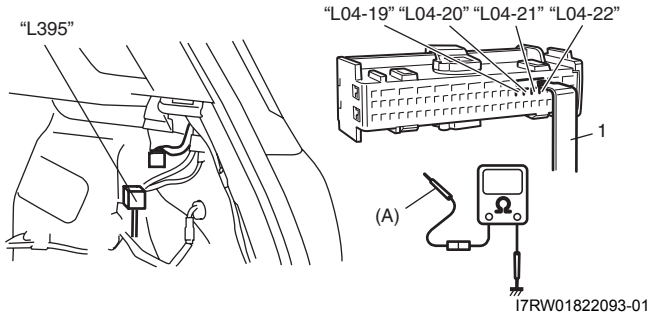 *Is each measured resistance infinity?*	DTC B1363: Repair “YEL/GRN” or “YEL/BLU” circuit for short to ground at driver curtain-air bag harness. DTC B1367: Repair “BLK/YEL” or “BRN/YEL” circuit for short to ground at passenger curtain-air bag harness.	DTC B1363: Repair “YEL/GRN” or “YEL/BLU” circuit for short to ground at floor harness. DTC B1367: Repair “BLK/YEL” or “BRN/YEL” circuit for short to ground at floor harness.

NOTE

Upon completion of inspection and repair work, perform the following items.

- **Reconnect all air bag system components, ensure all components are properly mounted.**
- **Clear DTCs referring to “DTC Clearance”, if any.**
- **Repeat “Air Bag Diagnostic System Check” to confirm that the trouble has been corrected.**

DTC B1364 / B1368: Curtain-Air Bag Circuit Shorted to Power Supply

S7RW0A8204046

DTC B1364: Driver Curtain-Air Bag Circuit Shorted to Power Supply
DTC B1368: Passenger Curtain-Air Bag Circuit Shorted to Power Supply

Wiring Diagram

Refer to “DTC B1361 / B1365: Curtain-Air Bag Circuit High Resistance”.

DTC Detecting Condition and Trouble Area

DTC detecting condition	Trouble area
DTC B1364: Driver curtain-air bag circuit has been shorted to power circuit for more than 4 sec. **DTC B1368:** Passenger curtain-air bag circuit has been shorted to power circuit for more than 4 sec.	• Driver / passenger curtain-air bag circuit • SDM

DTC Troubleshooting

Step	Action	Yes	No
1	*Was “Air Bag Diagnostic System Check Flow” performed?*	Go to Step 2.	Go to “Air Bag Diagnostic System Check Flow”.
2	**Driver / passenger curtain-air bag circuit check** 1) With ignition switch turned OFF, remove rear quarter upper trim (hatchback model) or rear pillar inner trim (sedan model) of applicable side and disconnect applicable side curtain-air bag (inflator) module connector. 2) Disconnect SDM connector “L04”. 3) Check for proper connection to SDM connector at terminal “L04-19” and “L04-20” (for DTC B1364) or terminal “L04-21” and “L04-22” (for DTC B1368). 4) Check for proper connection to applicable side curtain-air bag (inflator) module its connector at terminal in its connector. 5) If OK, release shorting bar in SDM connector inserting release tool (1) included in special tool (A). **Special tool** **(A): 09932–76010** 6) With ignition switch turned ON, measure voltage between “L04-19” terminal and body ground, and between “L04-20” terminal and body ground (for DTC B1364). 7) Measure voltage between “L04-21” terminal and body ground, and between “L04-22” terminal and body ground (for DTC B1368). 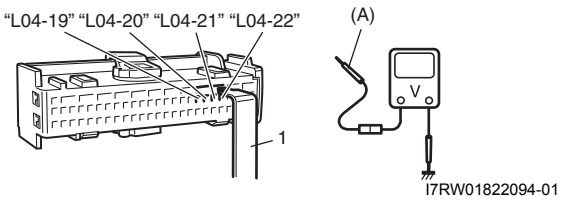 *Is each measured voltage 0 V?*	Substitute a known-good SDM and recheck.	Hatchback model: Go to Step 3. Sedan model: Repair “YEL/GRN” or “YEL/BLU” circuit for short to power supply at floor harness. (for DTC B1364) Repair “BLK/YEL” or “BRN/YEL” circuit for short to power supply at floor harness. (for DTC B1368)

Step	Action	Yes	No
3	**Floor harness circuit check (hatchback model)** 1) With ignition switch turned OFF, remove rear inner trim of right side and disconnect “L395” connector. 2) Check for proper connection to applicable side curtain-air bag at terminal in “L395” connector. 3) If OK, release shorting bar in SDM connector inserting release tool (1) included in special tool (A). **Special tool** **(A): 09932–76010** 4) With ignition switch turned ON, measure voltage between “L04-19” terminal and body ground, and between “L04-20” terminal and body ground (for DTC B1364). 5) Measure voltage between “L04-21” terminal and body ground, and between “L04-22” terminal and body ground (for DTC B1368). 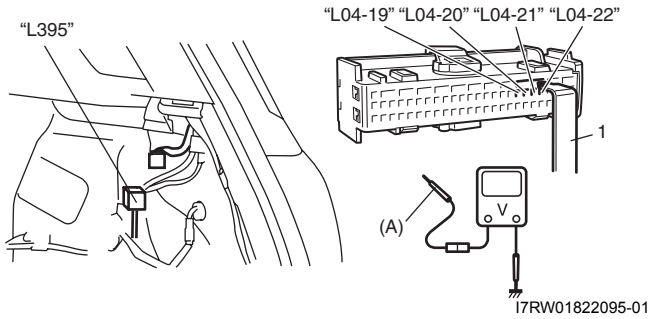 *Is each measured voltage 0 V?*	DTC B1364: Repair “YEL/GRN” or “YEL/BLU” circuit for short to power supply at driver curtain-air bag harness. DTC B1368: Repair “BLK/YEL” or “BRN/YEL” circuit for short to power supply at passenger curtain-air bag harness.	DTC B1364: Repair “YEL/GRN” or “YEL/BLU” circuit for short to power supply at floor harness. DTC B1368: Repair “BLK/YEL” or “BRN/YEL” circuit for short to power supply at floor harness.

NOTE

Upon completion of inspection and repair work, perform the following items.

- **Reconnect all air bag system components, ensure all components are properly mounted.**
- **Clear DTCs referring to “DTC Clearance”, if any.**
- **Repeat “Air Bag Diagnostic System Check” to confirm that the trouble has been corrected.**

SDM Power Supply and Ground Circuit Check

S7RW0A8204047

Wiring Diagram

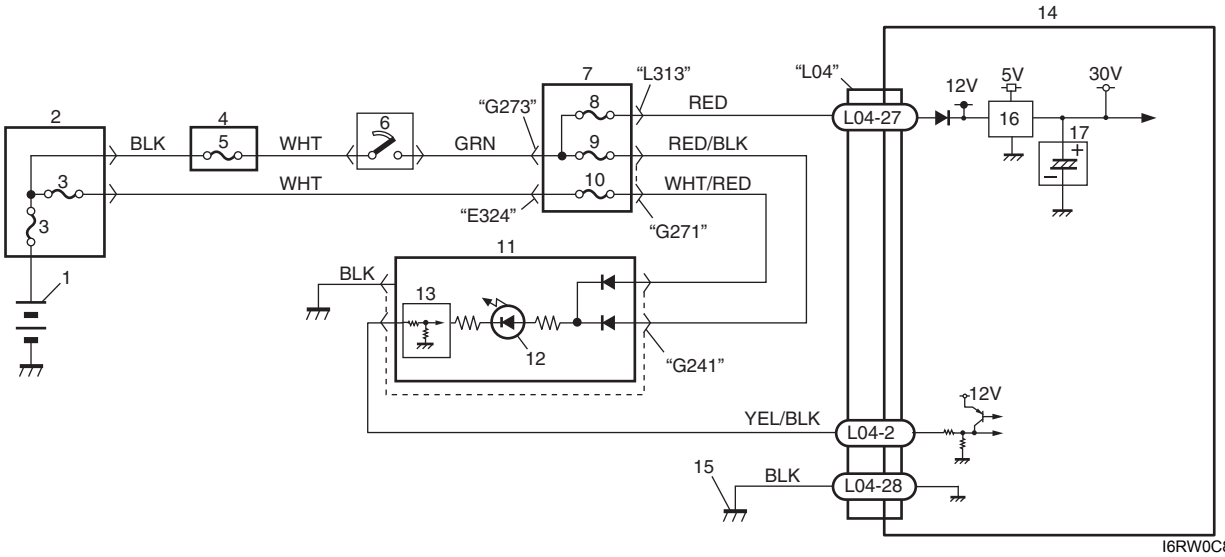

I6RW0C820016-01

1. Battery	6. Ignition switch	11. Combination meter	16. DC / DC converter
2. Main fuse box	7. Junction block assembly	12. "AIR BAG" warning light	17. Back up capacitor
3. Fuse	8. "A/B" fuse	13. Light driver	
4. Individual circuit fuse box No.1	9. "METER" fuse	14. SDM	
5. "IGN" fuse	10. "DOME" fuse	15. Ground for SDM	

Troubleshooting

Step	Action	Yes	No
1	**Battery voltage check** 1) Measure voltage on battery. *Is voltage in 9 – 16 V?*	Go to Step 2.	Check charging system and repair as necessary referring to "Generator Test (Undercharged Battery Check) in Section 1J" or "Generator Test (Overcharged Battery Check) in Section 1J".
2	**Connection check** 1) Check for loose each connection. *Is it connected securely?*	Go to Step 3.	Intermittent trouble. Check for intermittent trouble referring to "Inspection of Intermittent and Poor Connections" If OK, substitute a known-good SDM and recheck.
3	**Circuit fuse check** 1) With ignition switch turn OFF, check "A/B" fuse for blowing. *Is "A/B" fuse in good condition?*	Go to Step 4.	Repair defective wire circuit. After repaired, replace "A/B" fuse.

Step	Action	Yes	No
4	**Power supply circuit check** 1) With ignition switch turned OFF, disconnect connector from SDM. 2) Check for proper connection to SDM terminal at “L04-27”. 3) With ignition switch turned ON, measure voltage between “L04-27” terminal of SDM connector and body ground. **Special tool** **(A): 09932–76010** 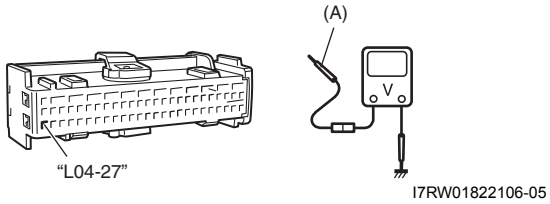 *Is voltage in 10 – 14 V?*	Go to Step 5.	Repair defective wire circuit.
5	**Ground circuit check** 1) Turn ignition switch to OFF position. 2) Check for proper connection to SDM terminal at “L04-28”. 3) Measure resistance between “L04-28” terminal and vehicle body ground. **Special tool** **(A): 09932–76010** 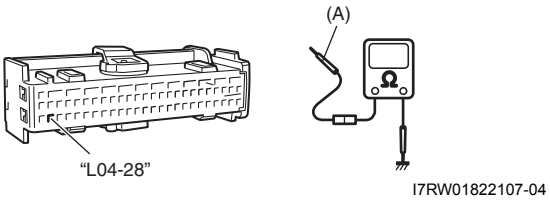 *Is resistance 1 Ω or less?*	SDM Power Supply and ground circuit is good condition.	Repair defective wire circuit.

Contact Coil Cable and Its Circuit Check

S7RW0A8204048

Troubleshooting

Step	Action	Yes	No
1	**Driver air bag circuit check** 1) Remove driver air bag (inflator) module referring to “Driver Air Bag (Inflator) Module Removal and Installation”. 2) With ignition switch turned OFF, disconnect SDM connector “L04”. 3) Release shorting bar in SDM connector inserting release tool (1) included in special tool (A). **Special tool** **(A): 09932–76010** 4) Measure resistance between “L04-3” and “L04-4” terminals. 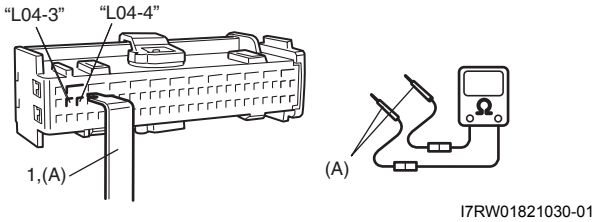 *Is each measured resistance infinity?*	Go to Step 2.	Check defective wire harness. If wire is OK, replace contact coil.
2	**Contact coil circuit (driver air bag circuit) check** 1) Remove contact coil referring to “Contact Coil Cable Assembly Removal and Installation in Section 6B”. 2) Measure resistance between “A” terminal of driver air bag connector (1) and “a” terminal of contact coil connector (2). 3) Measure resistance between “B” terminal of driver air bag connector (1) and “b” terminal of contact coil connector (2). **Special tool** **(A): 09932–76010** 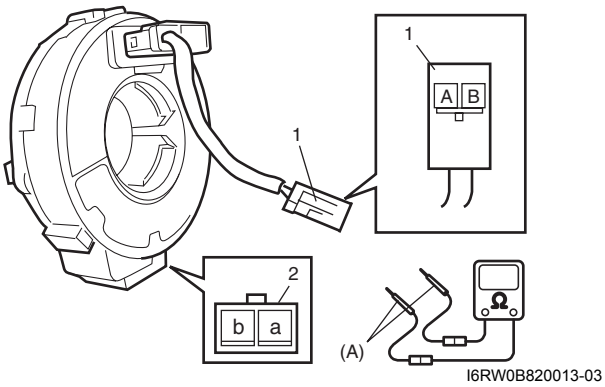 *Is each measured resistance 1 Ω or less?*	Go to Step 3 or 4.	Replace contact coil.

Step	Action	Yes	No
3	**Contact coil circuit (horn and audio control switch circuit) check (non cruise control model)** 1) Check for continuity between each terminal of horn switch terminals [A] and audio control switch terminals [B] (if equipped) as shown in figure. 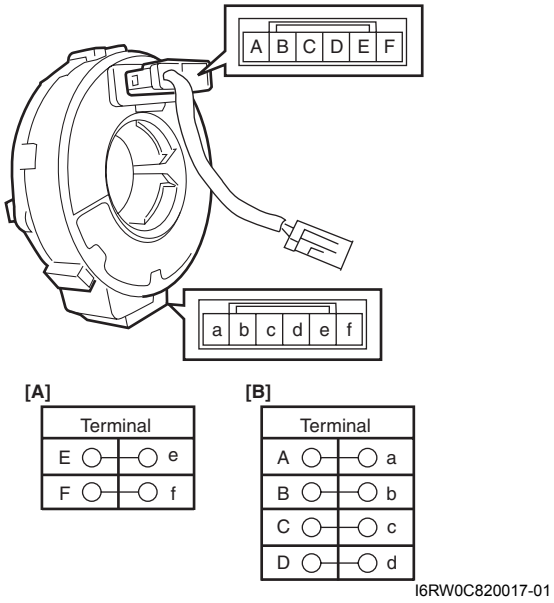 *Is each measured resistance 3 Ω or less?*	Go to Step 5.	Replace contact coil.

Step	Action	Yes	No
4	**Contact coil circuit (horn, audio control and cruise control switch circuit) check (cruise control model)** 1) Check for continuity between each terminal of horn switch terminals, audio control switch terminals and cruise control switch terminals as shown in figure. 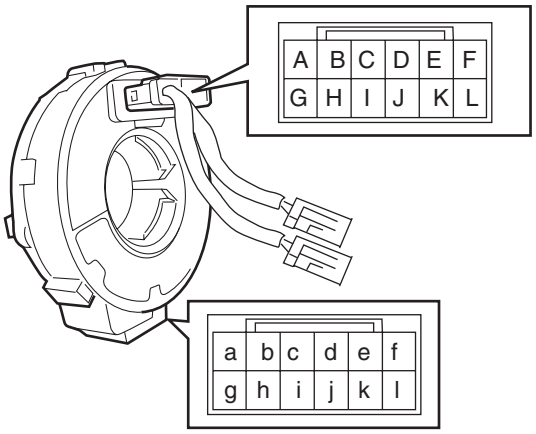 Terminal: A–a, B–b, C–c, D–d, E–e, F–f Terminal: G–g, H–h, I–i, J–j, K–k, L–l I7RW01822113-01 *Is each measured resistance 3 Ω or less?*	Go to Step 5.	Replace contact coil.
5	**Contact coil circuit check** 1) Measure resistance between each terminal and other terminal. *Is each measured resistance infinity?*	Contact coil and its circuit are good condition.	Replace contact coil.

Inspection of Intermittent and Poor Connections

S7RW0A8204049

Most intermittents are caused by faulty electrical connections or wiring. When a check for proper connection is requested in a diagnostic flow, perform careful check of suspect circuits.
If any abnormality is found, repair or replace as a wire harness assembly.

- Poor mating of connector halves, or terminals not fully seated in the connector body (backed out).
- Dirt or corrosion on the terminals. The terminals must be clean and free of any foreign material which could impede proper terminal contact.
  However, cleaning the terminal with a sand paper or the like is prohibited.
- Damaged connector body, exposing the terminals to moisture and dirt, as well as not maintaining proper terminal orientation with the component or mating connector.
- Improperly formed or damaged terminals.
  Check each connector terminal in problem circuits carefully to ensure good contact tension by using the corresponding mating terminal included in the connector test adapter kit (special tool).
  If contact tension is not enough, reform the terminal to increase contact tension or replace it.

  Special tool
  (A): 09932–76010 Connector test adapter kit

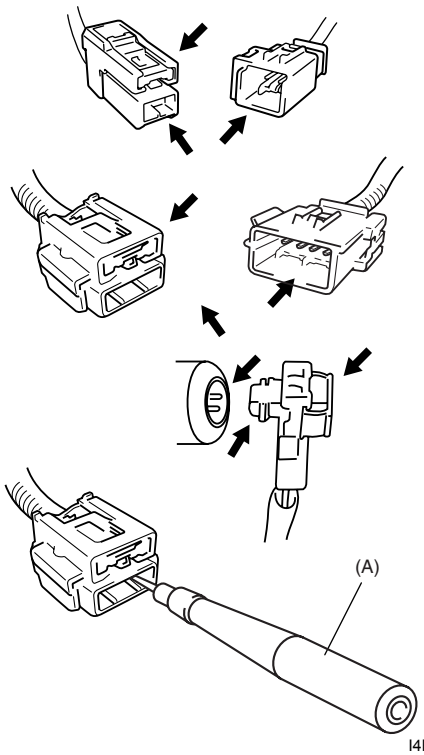

I4RS0A820045-01

- Poor terminal-to-wire connection.
  Check each wire harness in problem circuits for poor connection by shaking it by hand lightly. If any abnormal condition is found, change the wire harness assembly or component parts with new ones.

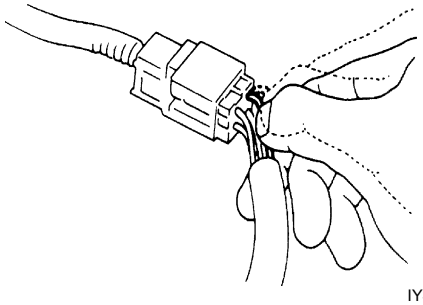

IYSQ01010028-01

- Wire insulation which is rubbed through, causing an intermittent short as the bare area touches other wiring or parts of the vehicle.
- Wire broken inside the insulation. This condition could cause a continuity check to show a good circuit, but if only 1 or 2 strands of a multi-strand-type wire are intact, resistance could be far too high.

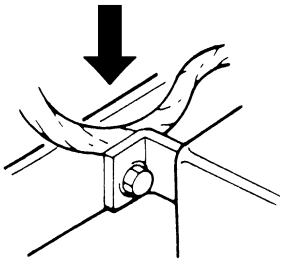

IYSQ01820025-01

Repair and Inspection Required after Accident

S7RW0A8204050

⚠ CAUTION

- **All air bag system components, including the electrical harness (component mounting points), must be inspected after an accident. If any components are damaged or bent, they must be replaced even if air bag system activation did not occur.**
- **Never use air bag system parts from another vehicle.**
- **Do not attempt to service the parts below. Service of these parts is by replacement only.**
  - **Driver / Passenger air bag (inflator) modules**
  - **Driver / Passenger side-air bag (inflator) modules**
  - **Driver / Passenger side curtain-air bag (inflator) modules**
  - **Driver / Passenger seat belt pretensioners**
  - **Forward impact-sensor**
  - **Driver / Passenger side impact-sensors**
  - **SDM**
  - **Contact coil and combination switch assembly**
  - **Air bag wire harness in main harness, instrument panel harness, floor harness, passenger air bag harness, side-air bag harness and side curtain-air bag harness.**
- **Proper operation of the sensors and air bag system requires that any repairs to the vehicle structure return it to its original production configuration.**

⚠ CAUTION

After detecting one time of such collision as to meet deployment conditions, the SDM must not be used.
Refer to "Air Bag Diagnostic System Check" when checking the SDM.

Accident with Deployment / Activation – Component Replacement

When driver and passenger air bags are deployed, the following components must be replaced.

- Driver and passenger air bag (inflator) modules
- Driver and passenger seat belt pretensioners
- SDM after detecting such collision as to meet deployment conditions
- Forward impact-sensor
- Instrument panel

When side-air bag and side curtain-air bag are deployed, the following components must be replaced.

- Deployed side-air bag (inflator) module
- Deployed side curtain-air bag (inflator) module
- Side impact-sensor
- SDM

Accident with or without Deployment / Activation – Component Inspections

Certain air bag and restraint system components must be inspected after any crash, whether the air bag system activated or not. If any faulty condition is found in the following checks, replace faulty part.
Those components are:

- Steering column (1) and shaft joints
  - Check for length, damage and bend according to "Checking Steering Column for Accident Damage in Section 6B".
- Steering column bracket (2) and capsules
  - Check for damage and bent.

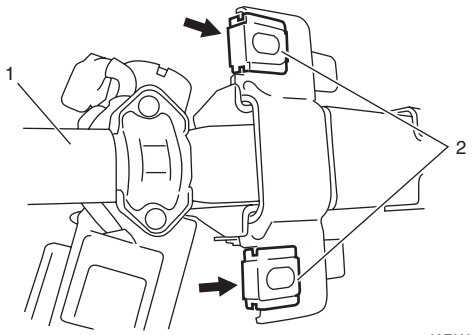

I6RW0B820015-01

- Steering wheel and driver air bag (inflator) module
  - Check for damage or air bag (inflator) module fitness.
  - Check trim cover (pad surface) for cracks.
  - Check wire harness and connector for damage or tightness.

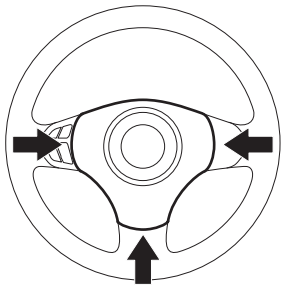

I5JB0A820062-01

- Contact coil assembly
  - Check wire harness and connectors for damage or tightness.
  - Check contact coil case for damage.
  - Check contact coil circuit referring to “Contact Coil Cable and Its Circuit Check”.

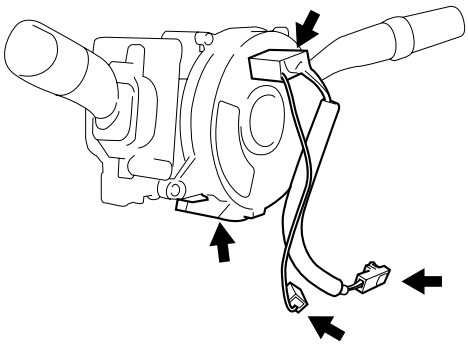

I4RS0A820048-01

- Instrument panel member and reinforcement
  - Check for any distortion, bending, cracking or other damage.
  - Check instrument panel for cracks or deformities.
- Passenger air bag (inflator) module
  - Check for dents, cracks, damage or fitness.
  - Check harness and connector for damage or tightness.

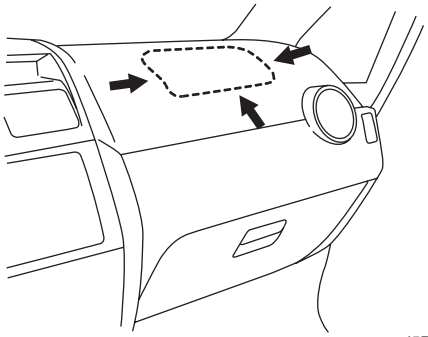

I5RW0A820058-03

- SDM
  - Check for external damage such as deformation, scratch, crack, peeled paint, etc.
  - Check SDM for a cause in itself preventing its proper installation. (There is a gap between SDM and SDM plate, or it cannot be fixed securely.)
  - Check connector or lead wire of SDM for scorching, melting or damage.
  - Check SDM connector and terminals for tightness.
  - Check if SDM sets a DTC and is judged as malfunctioning according to the diagnostic flow.

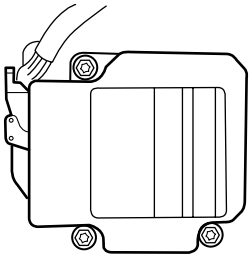

I5RH01820092-01

- Air bag wire harness and connections
  - Check for damages, deformities or poor connections.
    Refer to “Inspection of Intermittent and Poor Connections”.
  - Check wire harness clamps for tightness.

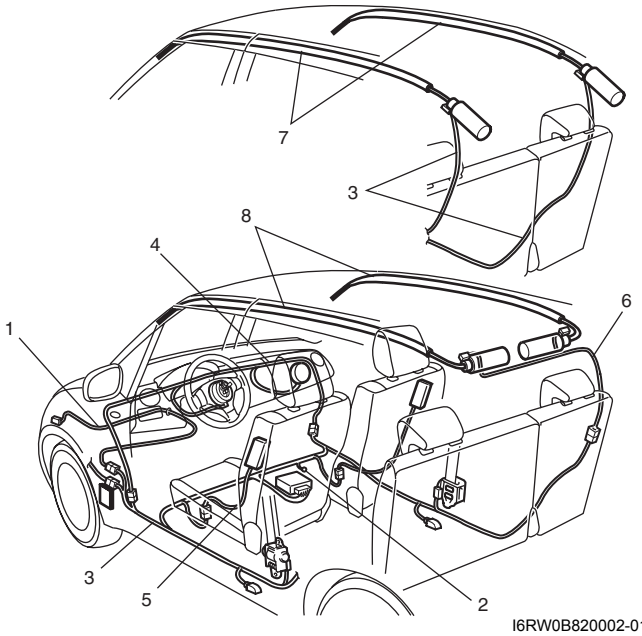

I6RW0B820002-01

1. Main harness	5. Side-air bag harness
2. Grounding point	6. Side curtain-air bag harness (hatchback model)
3. Floor harness	7. Side curtain-air bag (inflator) module (sedan model)
4. Instrument panel harness	8. Side curtain-air bag (inflator) module (hatchback model)

- Forward impact-sensor
  - Check sensor (1) and apron-side-member (driver side) (2) for damage, bend or rust.
  - Check connector (3) or lead wire (4) of forward-sensor for scorching, melting or damage.

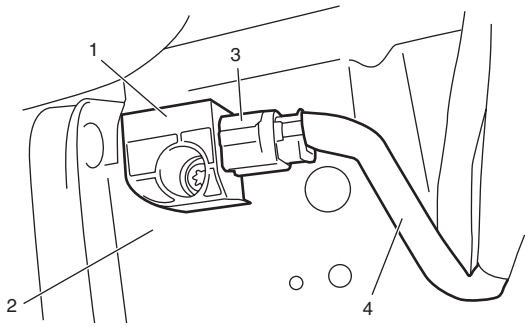

I5RW0A820059-01

- Side impact-sensor
  - Check sensor (1) and under body (2) for dents, cracks, deformation or rust.
  - Check sensor connector (sensor side and harness side) (3) or sensor lead wire (4) for damage, crack, scorching or melting.

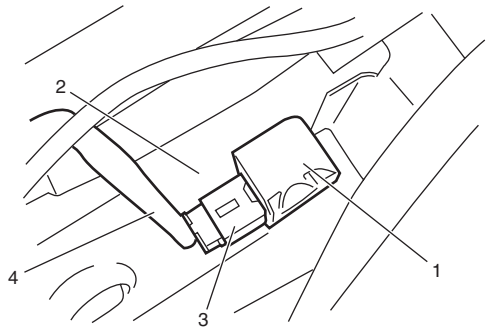

I5RW0A820060-01

- Seat belt pretensioner
  - Check for dents, cracks, damage or fitness
  - Check harness and connector for damage or tightness.

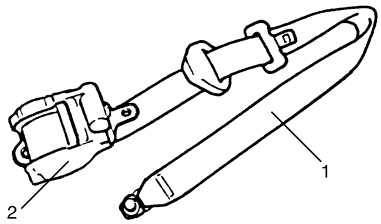

I3JA01820043-01

1. Seat belt	2. Retractor assembly

- Seat belts and mounting points
  - Refer to “Front Seat Belt Components in Section 8A”.
- “AIR BAG” warning light
  - After vehicle is completely repaired, perform “Air Bag Diagnostic System Check”.
- Side-air bag (inflator) module
  - Check for dents, cracks, damage or fitness.
  - Check trim cover for cracks or deformities.
  - Check wire harness and connector for damage or tightness.
- Side curtain-air bag (inflator) module
  - Check for dents, cracks, damage or fitness.
  - Check harness wire harness and connector for damage or tightness.
  - Check headlining for cracks or deformation.

Repair Instructions

Disabling Air Bag System

S7RW0A8206001

NOTE

With "A/B" fuse removed and ignition switch ON, "AIR BAG" warning light will be ON. This is normal operation and does not indicate air bag system malfunction.

1) Turn steering wheel so that vehicle's wheels (front tires) are pointing straight ahead.
2) Disconnect negative (–) cable at battery.
3) Turn ignition switch to "LOCK" position and remove key.
4) Remove "A/B" fuse from junction block assembly.
5) Remove driver side front pillar lower trim and disconnect yellow connector (1) for driver air bag as follows.
   a) Release locking of lock slider (2).
   b) After unlocked, disconnect connector.
6) Remove passenger side front pillar lower trim and disconnect yellow connector (3) for passenger air bag as follows.
   a) Release locking of lock slider (2).
   b) After unlocked, disconnect connector.

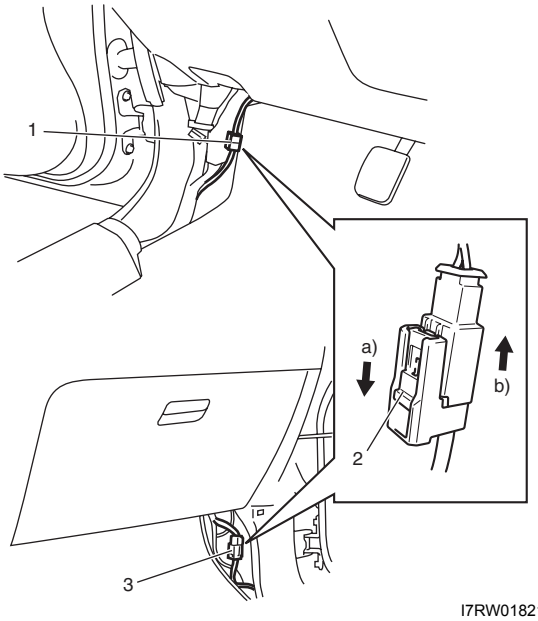

I7RW01821012-01

7) Disconnect yellow connector of side-air bag (inflator) module under front seat cushion (1).
   a) Release locking of lock slider (2).
   b) After unlocked, disconnect connector.

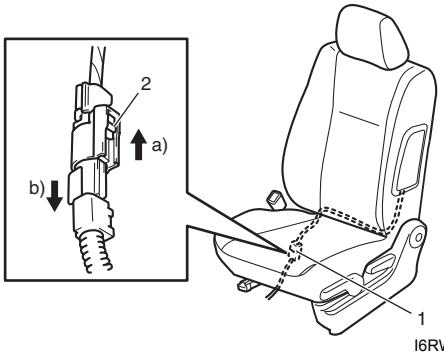

I6RW0B820017-01

8) Disconnect connector of side curtain-air bag (inflator) module as follows.
   For hatchback model:
   a) Remove right-side rear quarter lower trim.
   b) Release locking of lock slider (2) of yellow connector (1).
   c) With unlocked, disconnect connector.

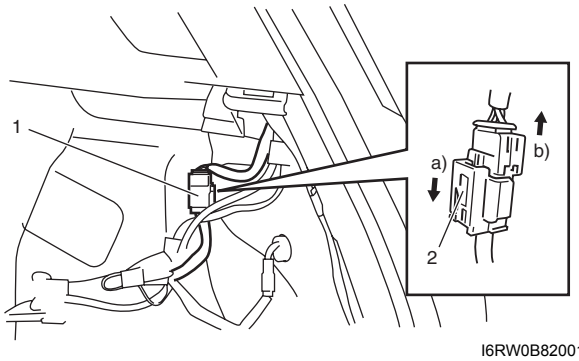

I6RW0B820018-01

   For sedan model
   a) Remove rear side sill scuff referring to step 3) of "Floor Carpet Removal and Installation in Section 9H".
   b) Remove rear seat side back.
   c) Remove rear pillar inner trim.
   d) Unlock lock button (2) of black connector (1).
   e) With lock button unlocked, disconnect connector.

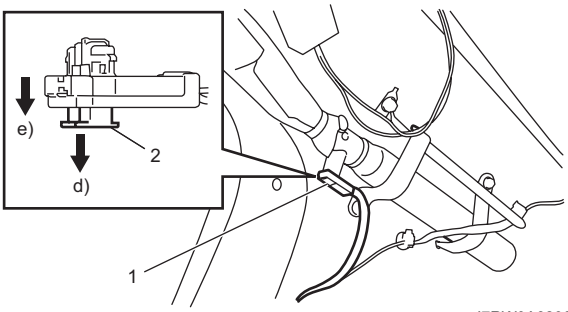

I7RW0A820004-01

Enabling Air Bag System

S7RW0A8206002

1) Confirm that battery negative (–) cable is disconnected.
2) Turn ignition switch to “LOCK” position and remove key.
3) Connect yellow connector (1) of driver air bag (inflator) module by pushing connector till click is heard from it.

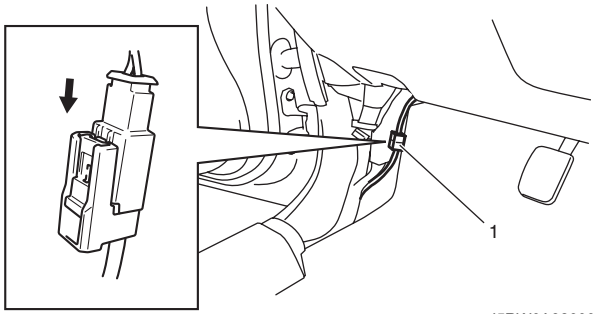

I5RW0A820091-01

4) Connect yellow connector (1) of passenger air bag (inflator) module by pushing connector till click is heard from it.

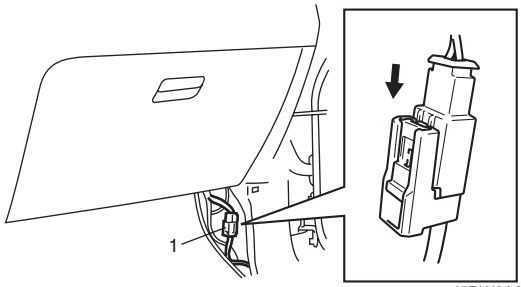

I5RW0A820062-02

5) Install driver and passenger side front pillar lower trim.
6) Connect yellow connector (1) of side-air bag (inflator) module by pushing connector till click is heard from it.

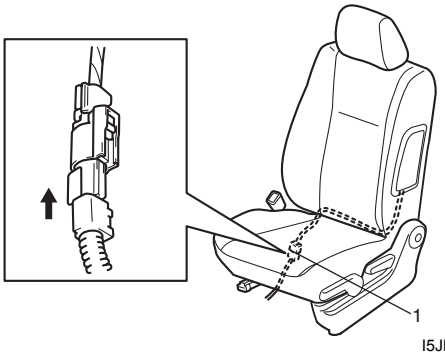

I5JB0A820070-01

7) Connect connector of side curtain-air bag (inflator) module and then install each trim as follows.
For hatchback model:
   a) Connect yellow connector (1) by pushing connector till click is heard from it.
   b) Install right-side rear quarter lower trim.

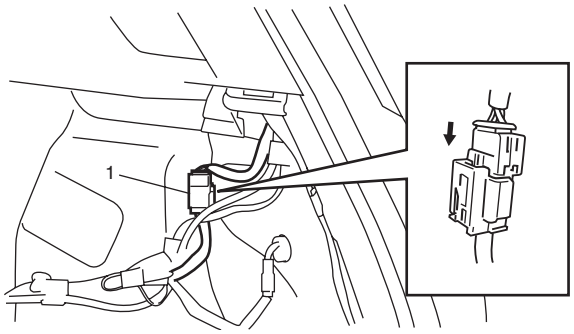

I5RW0A820063-01

For sedan model
   a) Connect black connector (1).
   b) Lock connector with lock button (2).
   c) Install rear pillar inner trim.
   d) Install rear seat side back referring to “Rear Seat Components in Section 9G”.
   e) Install rear side sill scuff.

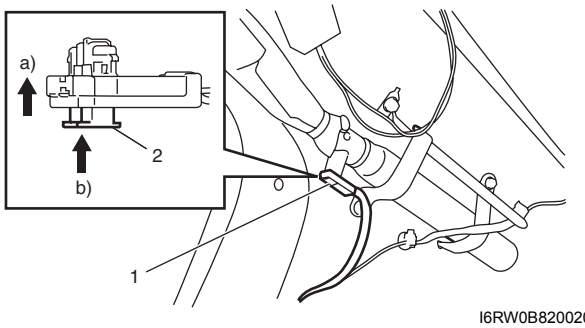

I6RW0B820020-01

8) Install “A/B” fuse to fuse box.
9) Connect negative (–) cable at battery.
10) Turn ignition switch to ON position and verify that “AIR BAG” warning light flashes 6 times and then turns OFF. If it does not operate as described, perform “Air Bag Diagnostic System Check”.

SDM Removal and Installation

S7RW0A8206003

⚠ WARNING

During service procedures, be very careful when handling a Sensing and Diagnostic Module (SDM).
Be sure to read “Precautions on Service and Diagnosis of Air Bag System” before starting to work and observe every precaution during work. Neglecting them may result in personal injury or inactivation of the air bag system when necessary.

Removal

1) Disconnect negative (–) cable at battery.
2) Disable air bag system referring to “Disabling Air Bag System”.
3) Remove console box referring to “Console Box Components in Section 9H”.
4) Remove G sensor (ABS model) or yaw rate / G sensor (ESP® model) referring to “G Sensor Removal and Installation (4WD Model) in Section 4E” or “Yaw Rate / G Sensor Removal and Installation in Section 4F” and its bracket (1).

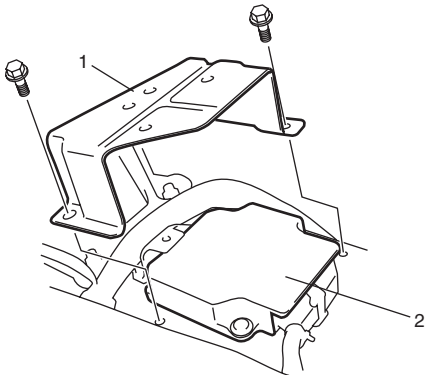

I5RW0A820064-01

2. SDM

5) Disconnect SDM connector (1) from SDM (2).
6) Remove SDM (2) from vehicle.

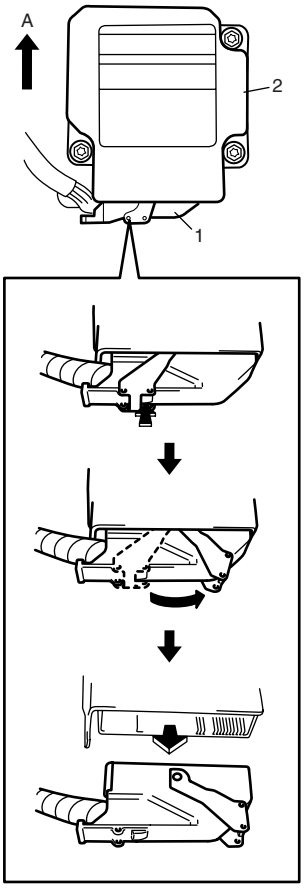

I4RS0A820056-01

A: Forward

Installation

1) Check that none of the following faulty conditions exists.
   - Bend, scratch, deformity in vehicle body where SDM is mounted.
   - Foreign matter or rust on mating surface of vehicle body where SDM is mounted.
2) Install SDM (2) to vehicle.

⚠ CAUTION

Ensure that arrow on the SDM is pointing toward the front of the vehicle.

3) Tighten SDM bolts (1) to specified torque.

   Tightening torque
   SDM bolt (a): 9 N·m (0.9 kgf-m, 6.5 lb-ft)

4) Connect SDM connector (2) to SDM (3) securely.

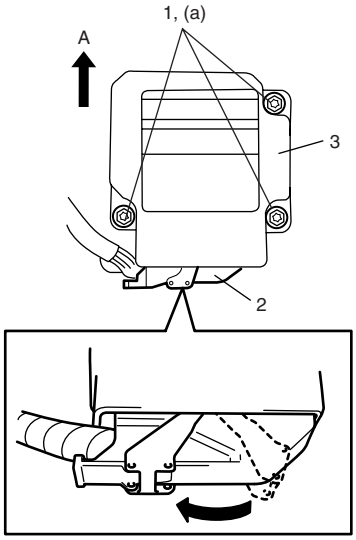

I4RS0A820107-01

A: Forward

5) Install G sensor bracket (1) (ABS model) or yaw rate / G sensor (ESP® model) to floor panel.

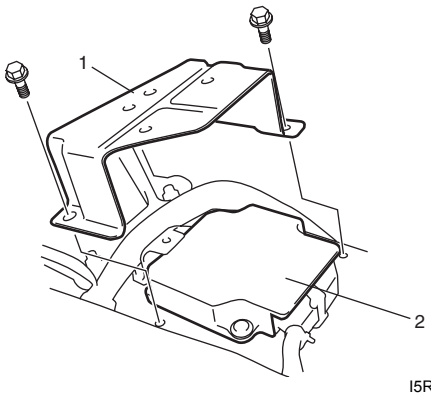

I5RW0A820064-01

2. SDM

6) Install G sensor or yaw rate / G sensor referring to “G Sensor Removal and Installation (4WD Model) in Section 4E” or “Yaw Rate / G Sensor Removal and Installation in Section 4F”.
7) Install console box upper cover.
8) Enable air bag system referring to “Enabling Air Bag System”.
9) Connect negative (–) cable at battery.

SDM Inspection

S7RW0A8206004

⚠ WARNING

During service procedures, be very careful when handling a Sensing and Diagnostic Module (SDM).
Be sure to read “Precautions on Service and Diagnosis of Air Bag System” before starting to work and observe every precaution during work. Neglecting them may result in personal injury or inactivation of the air bag system when necessary.

⚠ CAUTION

- **Do not connect a tester whatever type it may be.**
- **Never repair or disassemble SDM.**
- **If SDM has been dropped, it should be replaced.**

If any faulty condition is found in the following checks, replace.

- Check SDM and SDM plate for dents, cracks or deformation.
- Check SDM connector for damage, cracks or lock mechanism.
- Check SDM terminal for bend, corrosion or rust.

Driver Air Bag (Inflator) Module Removal and Installation

S7RW0A8206005

⚠ WARNING

When handling an air bag (inflator) module, be sure to read “Precautions on Handling and Storage of Air Bag System Components” and observe each instruction. Failure to follow them could cause a damage to the air bag (inflator) module or result in personal injury.

Removal

1) Disconnect negative (–) cable at battery.
2) Disable air bag system. Refer to “Disabling Air Bag System”.
3) Loosen driver air bag (inflator) module mounting bolts (1) till it turns freely, pull them out and fix them to bolt clamps.

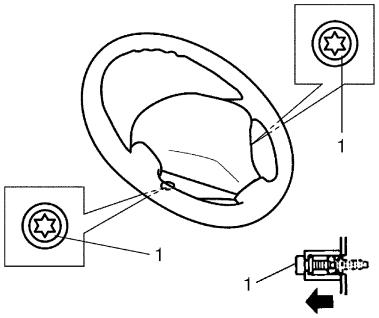

I3JA01820031-01

4) Remove air bag (inflator) module from steering wheel.
5) Disconnect driver air bag (inflator) module connector (1) of driver air bag (inflator) module and horn connector (2) (if equipped) as shown in figure.
   a) Unlock lock button (3).
   b) With lock button unlocked, disconnect connector.

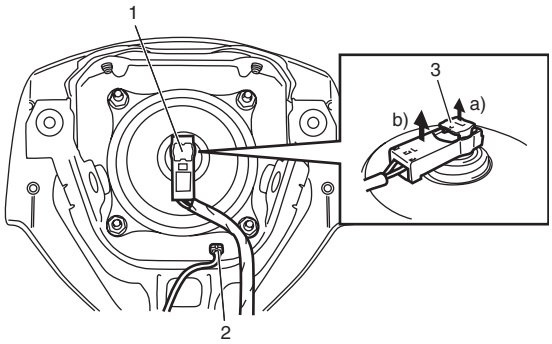

I5RW0A820065-01

⚠ WARNING

Special care is necessary when handling and storing a live (undeployed) air bag (inflator) module. Observe “Precautions on Handling and Storage of Air Bag System Components”. Otherwise, personal injury may result.

Installation

1) Connect horn connector (1) securely (if equipped).
2) Connect driver air bag (inflator) module connector (2) to driver air bag (inflator) module (3) securely as shown in figure.
   a) Connect connector.
   b) Lock connector with lock button.

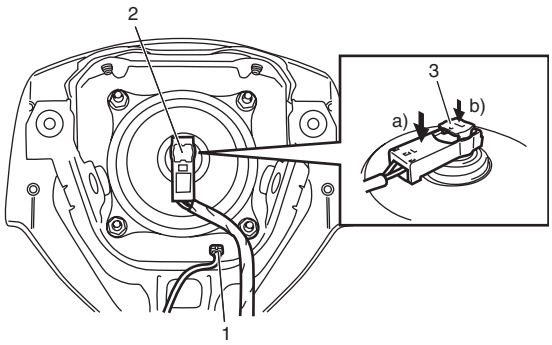

I5RW0A820066-01

3) Install driver air bag (inflator) module (1) to steering wheel (2), taking care so that no part of wire harness is caught between them.
4) Make sure that clearance between module (1) and steering wheel (2) is uniform all the way.
5) Tighten driver air bag (inflator) module mounting bolt (left side) (3) to specified torque first and then driver air bag (inflator) module mounting bolt (right side) (4) to specified torque.

   Tightening torque
   Driver air bag (inflator) module mounting bolt (a): 9 N·m (0.9 kgf-m, 6.5 lb-ft)

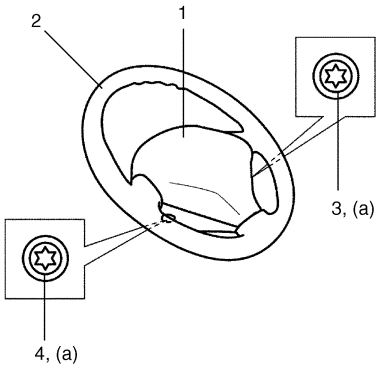

I5RH01820103-01

6) Enable air bag system. Refer to “Enabling Air Bag System”.
7) Connect negative (–) cable at battery.

Driver Air Bag (Inflator) Module Inspection

S7RW0A8206006

⚠ WARNING

Never disassemble air bag (inflator) module or measure its resistance. Otherwise, personal injury may result.

⚠ CAUTION

If air bag (inflator) module was dropped from a height of 90 cm (3 ft) or more, it should be replaced.

Check air bag (inflator) module visually and if any of the following is found, replace it with a new one.

- Air bag being deployed
- Trim cover (pad surface) (1) being cracked
- Inflator case (2) being damaged or having been exposed to strong impact (dropped)
- Bend or deformity of air bag (inflator) module bracket.

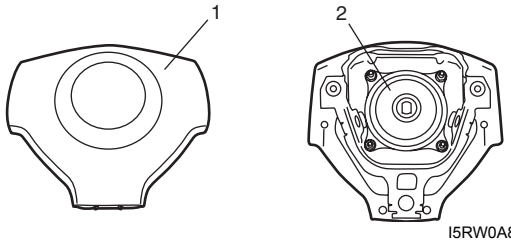

I5RW0A820067-01

Passenger Air Bag (Inflator) Module Removal and Installation

S7RW0A8206007

⚠ WARNING

- **Never attempt to disassemble or repair the passenger air bag (inflator) module. If any abnormality is found, be sure to replace it with new one as an assembly.**
- **Be sure to read “Precautions on Service and Diagnosis of Air Bag System”, “Precautions on Handling and Storage of Air Bag System Components” and “Precautions on Disposal of Air Bag and Seat Belt Pretensioner” before starting to work and observe every precaution during work. Neglecting them may result in personal injury or undeployment of the air bag when necessary.**

Removal

1) Disable air bag system. Refer to “Disabling Air Bag System”.
2) Remove center ventilation louver with garnish referring to “Center Ventilation Louver Removal and Installation in Section 7A”.
3) Pull out glove box while pushing its stopper from both right and left sides.
4) Remove passenger air bag (inflator) module attaching bolts (1) and its facing cover bolt (6).
5) Hold up passenger air bag (inflator) module with its facing cover (5) without extending wire harness (2) to avoid air bag connector damage and to disconnect passenger air bag (inflator) module connector (3) as shown in figure.
   a) Unlock lock button (4).
   b) With lock button unlocked, disconnect connector.
6) Remove passenger air bag (inflator) module with its facing cover (5) from instrument panel.

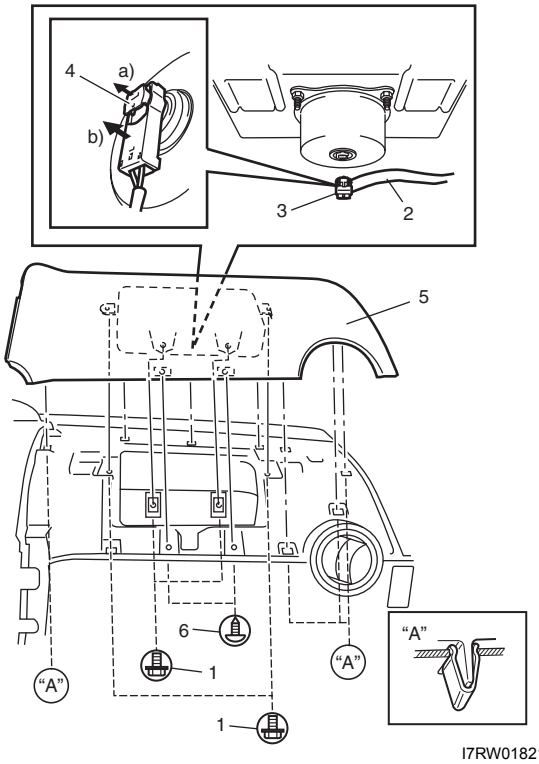

I7RW01821033-01

7) Remove passenger air bag (inflator) module (1) from its facing cover (2).

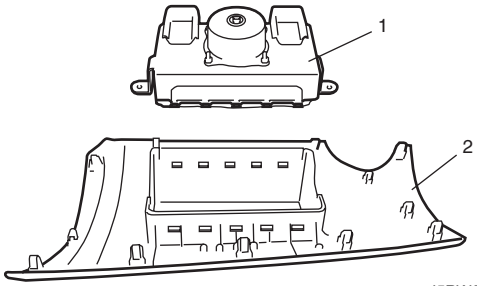

I5RW0A820069-01

⚠ WARNING

- **When carrying a live air bag (inflator) module, make sure the bag opening is pointed away from you.**
  Never carry air bag (inflator) module by wires or connector on the side of the module. In case of an accidental deployment, the bag will then deploy with minimal chance of injury.
- **The live passenger air bag (inflator) module must be kept with its bag (trim cover) facing up while being stored or left standing. This is necessary so that a free space is provided to allow the air bag to expand in the unlikely event of accidental deployment.**
- **Observe “Precautions on Handling and Storage of Air Bag System Components” for handling and storing it.**

Otherwise, personal injury may result.

Installation

1) Install passenger air bag (inflator) module to its facing cover (2).

⚠ CAUTION

Confirm claw (1) of passenger air bag (inflator) module hangs in its facing cover (2).

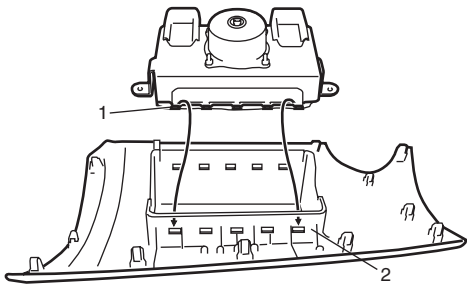

I5RW0A820070-01

2) Connect passenger air bag (inflator) module connector (1) securely as shown in figure.
   a) Connect connector.
   b) Lock connector with lock button (2).
3) Install passenger air bag (inflator) module with its facing cover (3) to instrument panel at specified torque as shown.

   Tightening torque
   Passenger air bag (inflator) module attaching bolt (a): 23 N·m (2.3 kgf-m, 17.0 lb-ft)

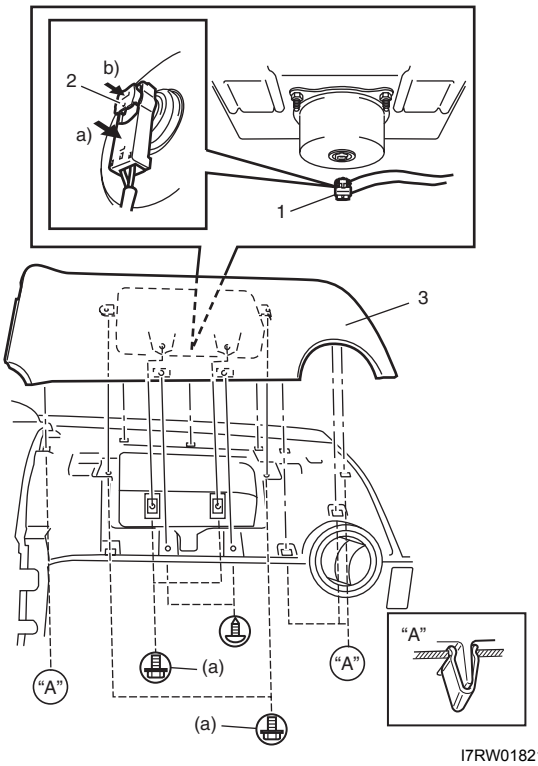

I7RW01821034-01

4) Install glove box.
5) Install center ventilation louver with garnish referring to "Center Ventilation Louver Removal and Installation in Section 7A".
6) Enable air bag system. Refer to "Enabling Air Bag System".

Passenger Air Bag (Inflator) Module Inspection

S7RW0A8206008

⚠ WARNING

- **Never measure resistance of passenger air bag (inflator) module or disassemble it. Otherwise personal injury may result.**
- **Never attempt to disassemble or repair the passenger air bag (inflator) module. If any abnormality is found, be sure to replace it with new one as an assembly.**
- **Be sure to read "Precautions on Service and Diagnosis of Air Bag System", "Precautions on Handling and Storage of Air Bag System Components" and "Precautions on Disposal of Air Bag and Seat Belt Pretensioner" before starting to work and observe every precaution during work. Neglecting them may result in personal injury or undeployment of the air bag when necessary.**

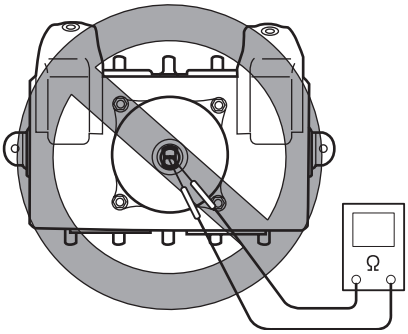

I5RW0A820072-03

⚠ CAUTION

If air bag (Inflator) module was dropped from a height of 90 cm (3 ft) or more, it should be replaced.

Check air bag (inflator) module appearance visually for the following symptoms and if any one of them is found, replace with a new one.

- Air bag has deployed.
- Wire harness or connector is damaged.
- Air bag (inflator) module is damaged or a strong impact was applied to it.
- Bend or deformity of air bag (inflator) module bracket.

Side-Air Bag (Inflator) Module Removal and Installation

S7RW0A8206009

⚠ WARNING

- **Never attempt to disassemble or repair the side-air bag (inflator) module. If any abnormality is found, be sure to replace it with new one as an assembly.**
- **Be sure to read "Precautions on Service and Diagnosis of Air Bag System", "Precautions on Handling and Storage of Air Bag System Components" and "Precautions on Disposal of Air Bag and Seat Belt Pretensioner" before starting to work and observe every precaution during work. Neglecting them may result in personal injury or undeployment of the air bag when necessary.**

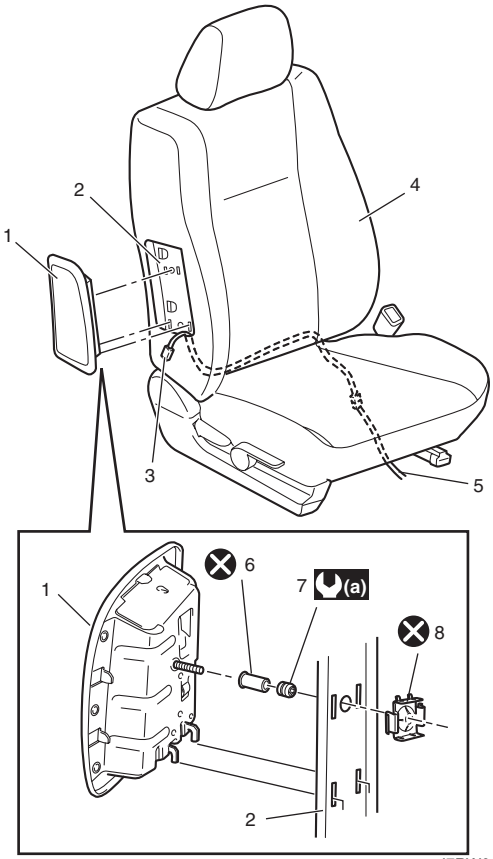

I7RW01822144-01

1. Side-air bag (inflator) module	6. Sleeve
2. Seat back frame bracket	7. Sleeve lock nut
3. Side-air bag (inflator) module connector	8. Fastener
4. Seat back	(a) : 2.5 N·m (0.25 kgf-m, 2.0 lb-ft)
5. Air bag harness in floor harness	⊗ : Do not reuse.

Removal

1) Disable air bag system. Refer to "Disabling Air Bag System".
2) Loosen seat back surface fastener (1) and roll up backside of seat back surface.

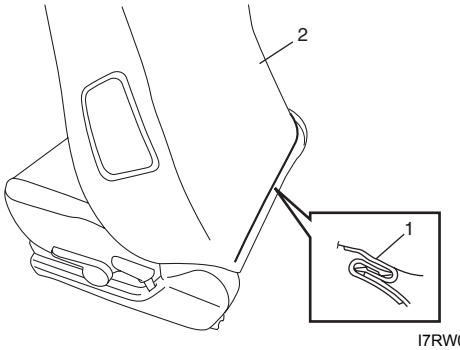

I7RW01822145-01

2. Seat back

3) Remove sleeve lock nut (1) from side-air bag (inflator) module (2).

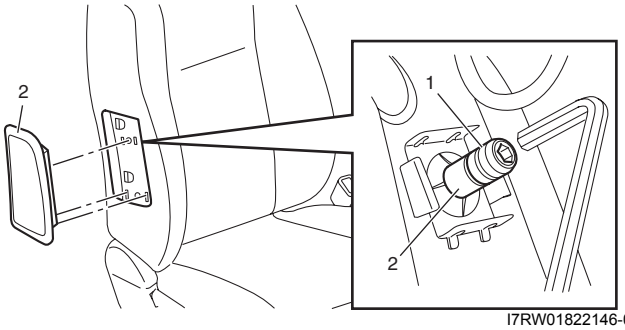

I7RW01822146-01

4) Remove side-air bag (inflator) module from seat back.
5) Disconnect side-air bag (inflator) module connector (1) as shown in the figure.
   a) Unlock lock button (2).
   b) With lock button unlocked, disconnect connector.

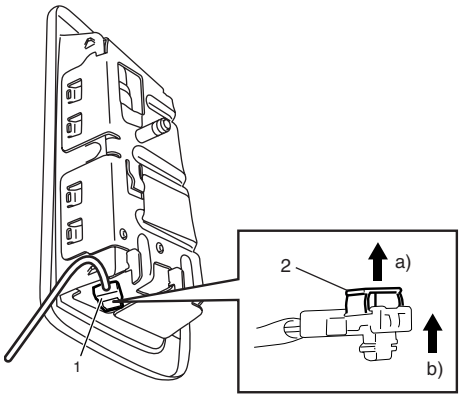

I4RS0A820068-01

⚠ WARNING

- **When carrying a live air bag (inflator) module, make sure the bag opening is pointed away from you.**
  Never carry air bag (inflator) module by wires or connector on the side of the module. In case of an accidental deployment, the bag will then deploy with minimal chance of injury.
- **As the live side-air bag (inflator) module must be kept with its bag (trim cover) facing up while being stored or left standing. This is necessary so that a free space is provided to allow the air bag to expand in the unlikely event of accidental deployment.**
- **Observe "Precautions on Handling and Storage of Air Bag System Components" for handling and storing it.**

Otherwise, personal injury may result.

6) Remove fastener (1) with sleeve (2) from seat back.

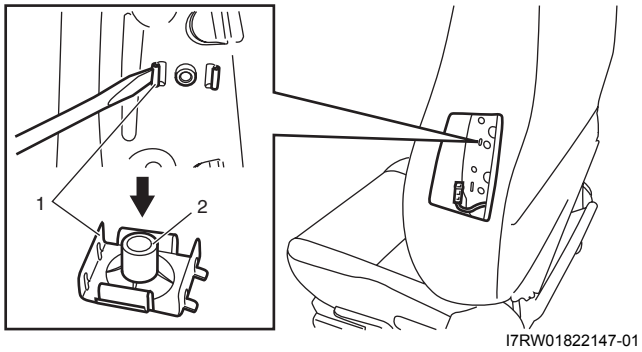

Installation

1) Install new fastener (1) to seat back.

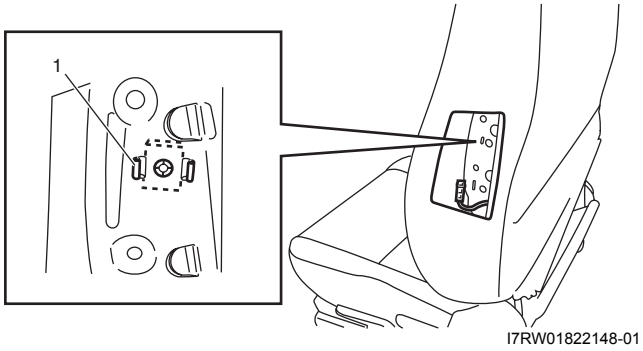

2) Install new sleeve (1) and sleeve lock nut (2) to side-air bag (inflator) module, then tighten nut to specified torque.

Tightening torque
Sleeve lock nut (a): 2.5 N·m (0.25 kgf-m, 2.0 lb-ft)

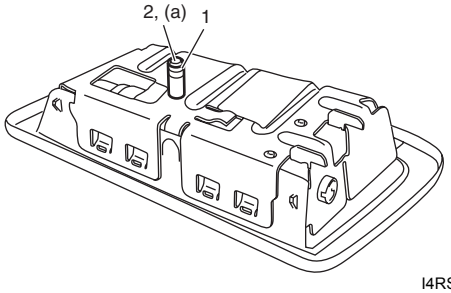

3) Connect side-air bag (inflator) module connector (1) securely as shown in the figure.
   a) Connect connector.
   b) Lock connector with lock button (2).

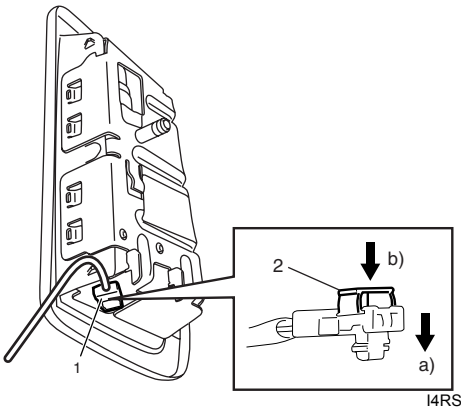

4) Insert claw (1) of side-air bag (inflator) module on installation hole (2).
5) Install side-air bag (inflator) module by pushing it into fastener (3) securely.

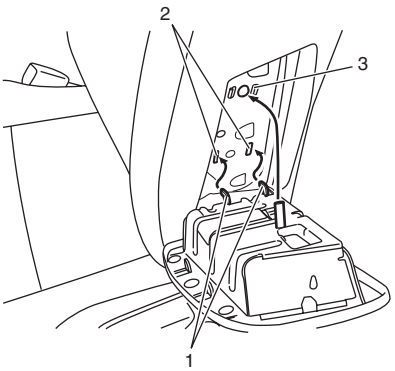

6) Roll down backside seat back surface and fix seat back surface fastener securely.

Side-Air Bag (Inflator) Inspection

S7RW0A8206010

⚠ WARNING

- **Never attempt to disassemble or repair the side-air bag (inflator) module. If any abnormality is found, be sure to replace it with new one as an assembly.**
- **Be sure to read "Precautions on Service and Diagnosis of Air Bag System" before starting to work and observe every precaution during work. Neglecting them may result in personal injury or undeployment of the air bag when necessary.**

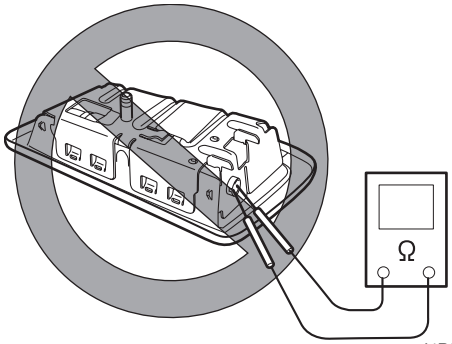

I4RS0A820075-02

⚠ CAUTION

If air bag (inflator) module was dropped from a height of 90 cm (3 ft) or more, it should be replaced.

Check air bag (inflator) module appearance visually for the following symptoms and if any one of them is found, replace with a new one.

- Air bag has deployed.
- There is a crack in trim cover (pad surface).
- Wire harness or connector is damaged.
- Air bag (inflator) module is damaged or a strong impact was applied to it.
- Bend or deformity of air bag (inflator) module bracket.

Side Curtain-Air Bag (Inflator) Module Removal and Installation

S7RW0A8206011

⚠ WARNING

- **Never attempt to disassemble or repair the side curtain-air bag (inflator) module. If any abnormality is found, be sure to replace it with new one as an assembly.**
- **Be sure to read "Precautions on Service and Diagnosis of Air Bag System", "Precautions on Handling and Storage of Air Bag System Components" and "Precautions on Disposal of Air Bag and Seat Belt Pretensioner" before starting to work and observe every precaution during work. Neglecting them may result in personal injury or undeployment of the air bag when necessary.**

Removal

1) Disable air bag system. Refer to "Disabling Air Bag System".
2) Remove head lining referring to "Head Lining Removal and Installation in Section 9H".
3) Disconnect side curtain-air bag (inflator) module connector (1) as shown in figure.
   a) Unlock lock button (2).
   b) With lock button unlocked, disconnect connector.

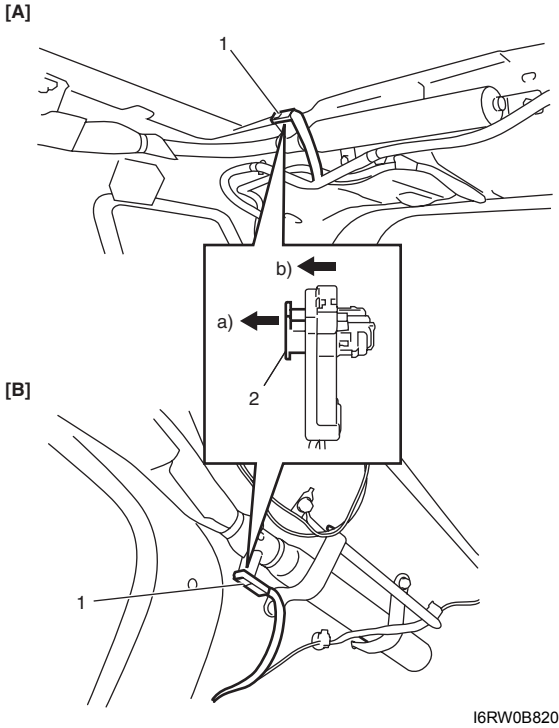

I6RW0B820021-01

[A]: Hatchback model	[B]: Sedan model

4) Remove side curtain-air bag (inflator) module fixing bolts (1) and clips (2).

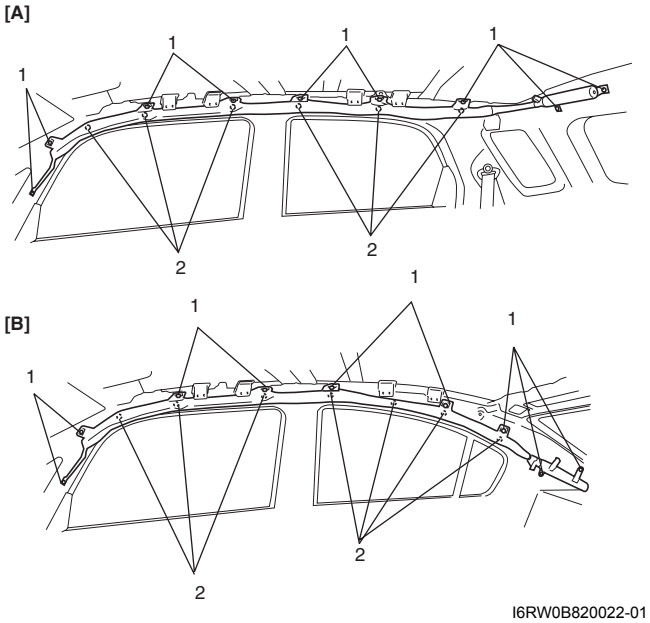

[A]: Hatchback model	[B]: Sedan model

5) Remove side curtain-air bag (inflator) module.

⚠ WARNING

- **When carrying a live air bag (inflator) module, make sure the bag opening is pointed away from you.**
  Never carry air bag (inflator) module by wires or connector on the side of the module. In case of an accidental deployment, the bag will then deploy with minimal chance of injury.
- **As the live curtain air bag (inflator) module must be kept with its bag facing up while being stored or left standing. This is necessary so that a free space is provided to allow the air bag to expand in the unlikely event of accidental deployment.**
- **Observe "Precautions on Handling and Storage of Air Bag System Components" for handling and storing it.**

Otherwise, personal injury may result.

Installation

⚠ WARNING

Do not install side curtain-air bag (inflator) module while twisted or bent. Otherwise, side curtain-air bag (inflator) module may not deploy and injury may result.

1) Install side curtain-air bag (inflator) module (1) with clips (2) and new bolts (3).
2) Tighten side curtain-air bag (inflator) module attaching bolts (4) to specified torque.

NOTE

Confirm not to move clip (2) after tightening bolt.

Tightening torque
Side curtain-air bag (inflator) module attaching bolts (a): 11 N·m (1.1 kgf-m, 8.0 lb-ft)

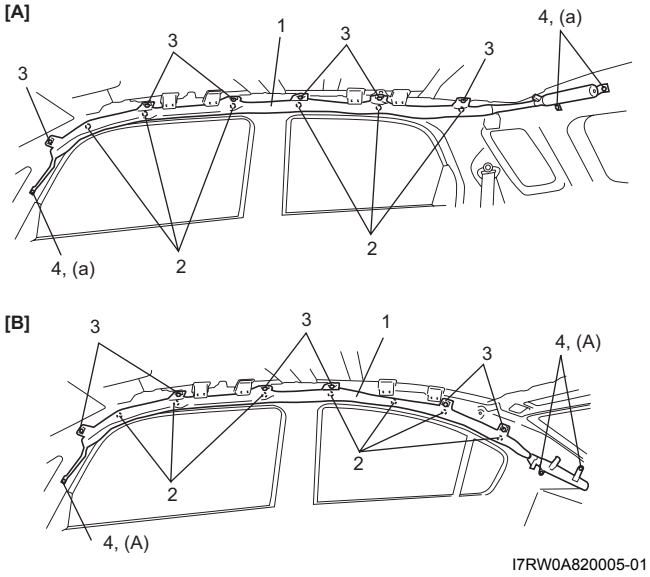

[A]: Hatchback model	[B]: Sedan model

3) Connect side curtain-air bag (inflator) module connector (1) securely as shown in figure.
   a) Connect connector.
   b) Lock connector with lock button (2).

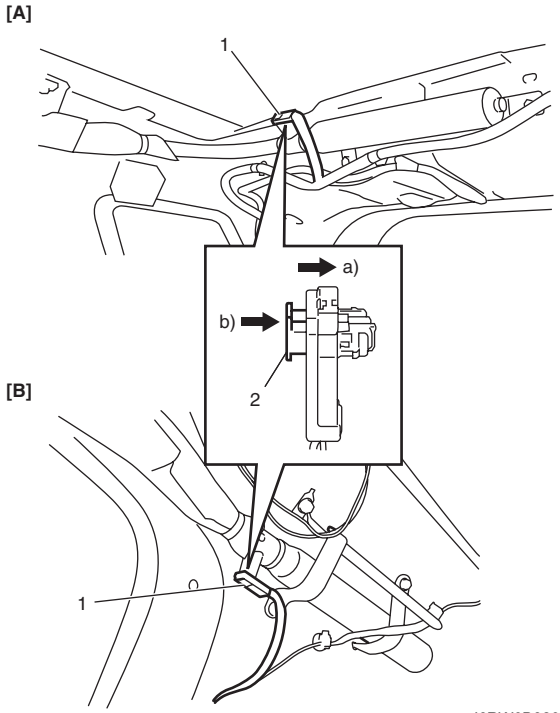

I6RW0B820024-01

[A]: Hatchback model	[B]: Sedan model

4) Install head lining referring to “Head Lining Removal and Installation in Section 9H”.
5) Enable air bag system. Refer to “Enabling Air Bag System”.

Side Curtain-Air Bag (Inflator) Module Inspection

S7RW0A8206012

⚠ WARNING

- **Never measure resistance of side curtain-air bag (inflator) module or disassemble it. Otherwise personal injury may result.**
- **Never attempt to disassemble or repair the side curtain-air bag (inflator) module. If any abnormality is found, be sure to replace it with new one as an assembly.**
- **Be sure to read “Precautions on Service and Diagnosis of Air Bag System”, “Precautions on Handling and Storage of Air Bag System Components” and “Precautions on Disposal of Air Bag and Seat Belt Pretensioner” before starting to work and observe every precaution during work. Neglecting them may result in personal injury or undeployment of the air bag when necessary.**

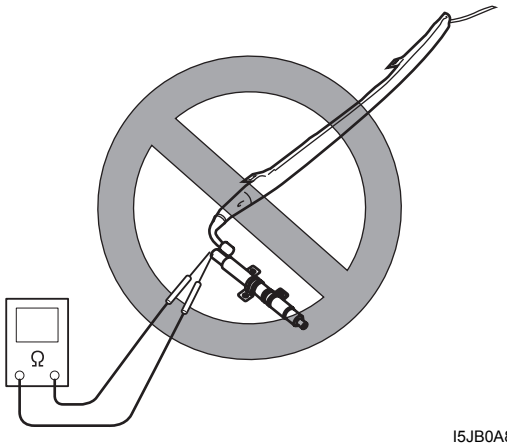

I5JB0A820089-02

⚠ CAUTION

If air bag (inflator) module was dropped from a height of 90 cm (3 ft) or more, it should be replaced.

Check air bag (inflator) module appearance visually for the following symptoms and if any one of them is found, replace with a new one.

- Air bag has deployed.
- Inflator case being damaged or having been exposed to strong impact (dropped).

Forward Impact-Sensor Removal and Installation

S7RW0A8206013

⚠ WARNING

During service procedures, be very careful when handling a sensor.

- **Never strike or jar a sensor.**
- **A sensor and mounting bracket bolts must be carefully torqued to assure proper operation. Under loose connection, it could cause improper operation of the air bag system.**

Removal

1) Disconnect negative (–) cable at battery.
2) Disable air bag system referring to “Disabling Air Bag System”.
3) Remove front bumper referring to “Front Bumper and Rear Bumper Components in Section 9K”.
4) Disconnect forward impact-sensor connector (1) sliding connector outer (2) as shown.
5) Remove forward impact-sensor bolt (3) and forward impact-sensor (4) from apron-side-member (driver side) (5).

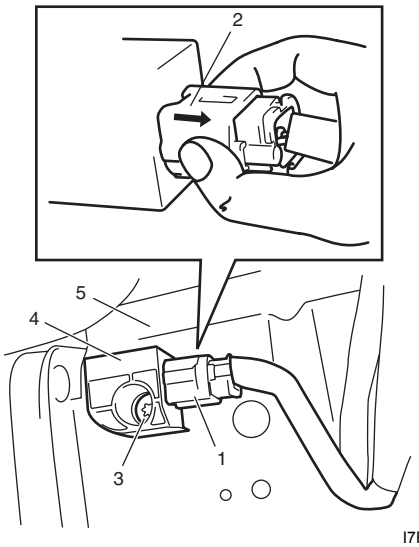

I7RW01821035-01

Installation

⚠ CAUTION

Proper operation of forward impact-sensor requires sensor be rigidly attached to vehicle structure and that the arrow on sensor be pointing toward the front of the vehicle.

1) Check that none of the following faulty conditions exists.
   - Bend, deformity or rust of front panel.
   - Foreign matter on mating surface of sensor.
2) Install forward impact-sensor (1) to apron-side-member (driver side) (3) and tighten mounting bolt (2) to specified torque.

   Tightening torque
   Forward impact-sensor mounting bolt (a): 9 N·m (0.9 kgf-m, 6.5 lb-ft)

3) Connect forward impact-sensor connector (4) by pushing connector till click is heard from it.

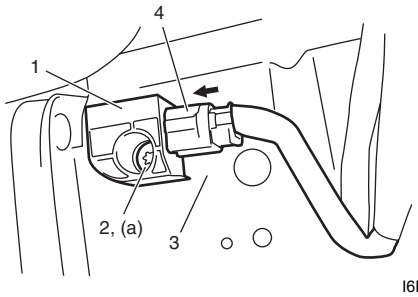

I6RW0B820038-01

4) Install front bumper referring to “Front Bumper and Rear Bumper Components in Section 9K”.
5) Enable air bag system referring to “Enabling Air Bag System”.
6) Connect negative (–) cable at battery.

Forward Impact-Sensor Inspection

S7RW0A8206014

⚠ WARNING

During service procedures, be very careful when handling a sensor.

- **Never strike or jar a sensor.**
- **A sensor and mounting bracket bolts must be carefully torqued to assure proper operation. Under loose connection, it could cause improper operation of the air bag system.**

⚠ CAUTION

- **Never disassemble forward impact-sensor.**
- **Sensor should be replaced when it was dropped from a height of 90 cm (3 ft) or more.**

- Check sensor for dents, cracks or deformation.
- Check sensor connector (sensor side and harness side) and sensor connector lock mechanism for damage or crack.
- Check connector terminals for bend, corrosion or rust.

Side Impact-Sensor Removal and Installation

S7RW0A8206015

⚠ WARNING

During service procedures, be very careful when handling a sensor.

- **Never strike or jar a sensor.**
- **A sensor bolt must be carefully torqued to assure proper operation. Under loose connection, it could cause improper operation of the air bag system.**

Removal

1) Disconnect negative (–) cable at battery.
2) Disable air bag system. Refer to “Disabling Air Bag System”.
3) Remove center pillar lower trim.
4) Turn up floor carpet at front seat side.
5) Disconnect side impact-sensor connector (1) sliding connector outer (2) as shown.
6) Remove side impact-sensor bolts (3), and side impact-sensor (4) from side sill inner panel (5).

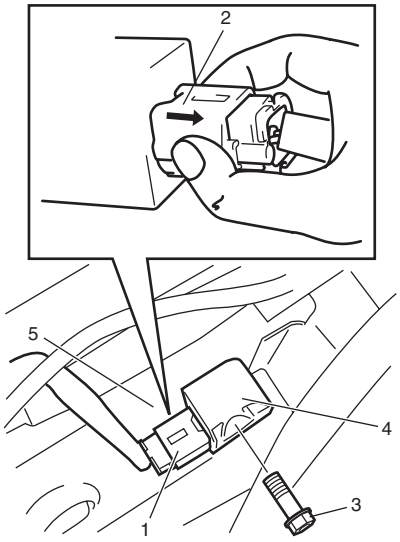

I7RW01822149-01

Installation

⚠ CAUTION

Proper operation of side impact-sensor requires that sensor is rigidly attached to specified position.

1) Check that none of following faulty conditions exists.
   - Bend, deformity or rust of under body.
   - Foreign matter on mating surface of sensor.
2) Install side impact-sensor (1) to side sill inner panel (2) and tighten side impact-sensor bolt (3) to specified torque.

   Tightening torque
   Side impact-sensor bolt (a): 9 N·m (0.9 kgf-m, 6.5 lb-ft)

3) Connect side impact-sensor connector (4) by pushing connector till click is heard from it.

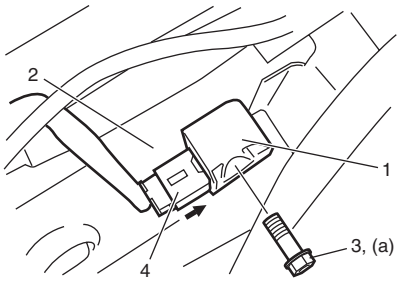

I7RW01822150-01

4) Return the carpet, and install center pillar lower trim.
5) Enable air bag system. Refer to “Enabling Air Bag System”.
6) Connect negative (–) cable at battery.

Side Impact-Sensor Inspection

S7RW0A8206016

⚠ WARNING

During service procedures, be very careful when handling a sensor.

- **Never strike or jar a sensor.**
- **A sensor and mounting bracket bolts must be carefully torqued to assure proper operation. Under loose connection, it could cause improper operation of the air bag system.**

⚠ CAUTION

- **Never disassemble side impact-sensor.**
- **Sensor should be replaced when it was dropped from a height of 90 cm (3 ft) or more.**

- Check sensor for dents, crack, deformation.
- Check sensor connector (sensor side and harness side), lock mechanism or sensor lead wire for damage, crack, scorching or melting.
- Check connector terminals for bent, corrosion or rust. If any faulty condition is found in above checks, replace.

Passenger Air Bag (Inflator) Module Repair Harness Installation

S7RW0A8206017

Replace passenger air bag (inflator) module repair harness (2) according to the following procedure when the harness (9) connected with passenger air bag (inflator) module of the air bag harness included in instrument panel harness (7) and passenger air bag (inflator) module connector (1) is damaged.

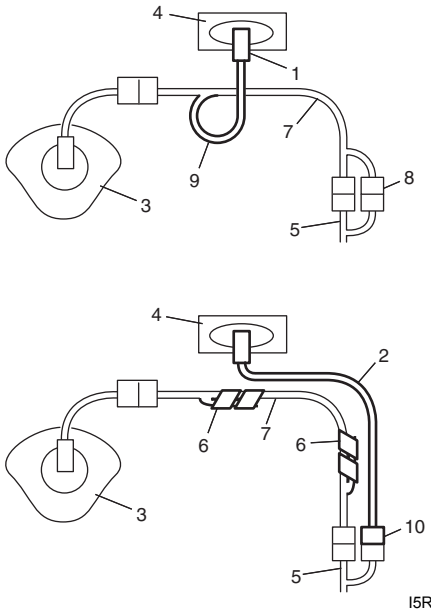

I5RW0C820001-01

3.	Driver air bag (inflator) module
4.	Passenger air bag (inflator) module
5.	Floor harness
6.	Vinyl tape
7.	Instrument panel harness
8.	Floor harness joint (yellow) connector with passenger air bag (inflator) module of air bag harness included in instrument panel harness
10.	Floor harness joint (yellow) connector of passenger air bag (inflator) module repair harness

1) Disable air bag system. Refer to “Disabling Air Bag System”.
2) Remove passenger air bag (inflator) module referring to “Passenger Air Bag (Inflator) Module Removal and Installation” if it has installed.
3) Disconnect floor harness joint (yellow) connector (1) with passenger air bag (inflator) module of air bag harness included in instrument panel harness from floor harness located near the glove box.

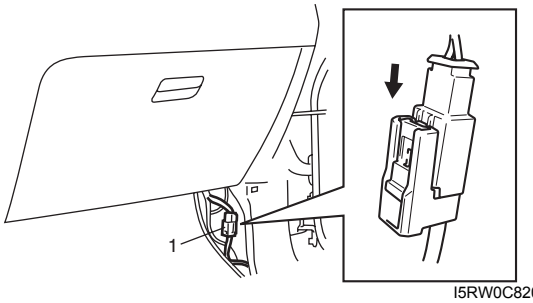

I5RW0C820002-01

4) Cut off passenger air bag (inflator) module connector (1) and floor harness joint (yellow) connector (2) with passenger air bag (inflator) module of air bag harness included in instrument panel harness as shown, and then fasten it to instrument panel harness with vinyl tape for avoiding interference with other parts.

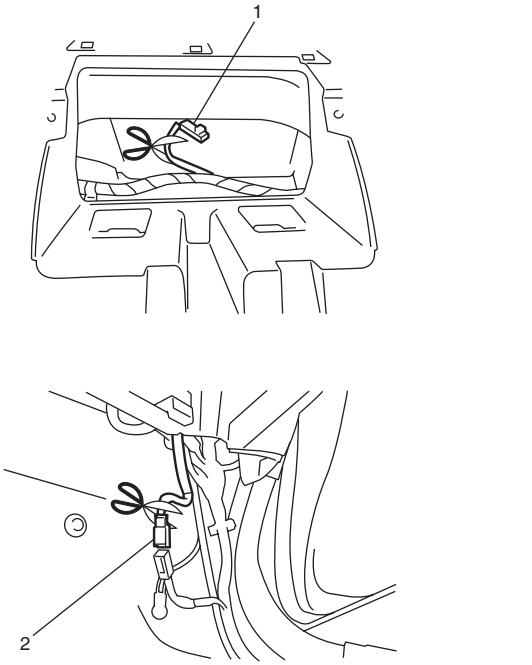

I5RW0C820003-01

5) Fix passenger air bag (inflator) module repair harness (1) to instrument panel harness (2).

⚠ CAUTION

To avoid interference with other parts, fasten the repair harness to instrument panel harness with a clamp (3) as shown in figure.

6) Connect passenger air bag (inflator) module repair harness connector (4) to floor harness securely till click is heard.

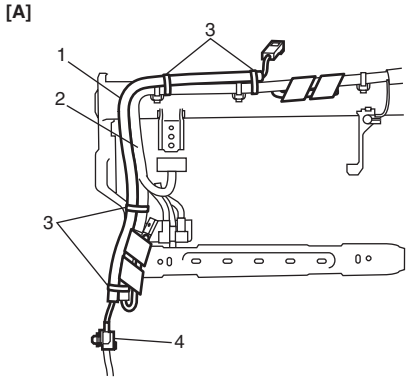

I5RW0C820004-01

[A]: Viewed from dash panel side

7) Install passenger air bag (inflator) module referring to “Passenger Air Bag (Inflator) Module Removal and Installation”.
8) Enabling air bag system referring to “Enabling Air Bag System”.
9) Confirm that there is no DTC detected to SDM with ignition switch turned ON.

Air Bag (Inflator) Module and Seat Belt Pretensioner Disposal

S7RW0A8206018

⚠ WARNING

Failure to follow proper air bag (inflator) module and seat belt pretensioner disposal procedures can result in air bag deployment and pretensioner activation which may cause personal injury. Do not dispose of live (undeployed) air bag (inflator) modules and seat belt pretensioners. Because undeployed air bag (inflator) module / inactivated seat belt pretensioner must not be disposed of through normal refuse channels. Undeployed air bag (inflator) module and inactivated seat belt pretensioner contain substances that can cause severe illness or personal injury if sealed container is damaged during disposal.

Air bag (inflator) module / seat belt pretensioner can be deployed / activated inside or outside of vehicle. Deployment / Activation method used depends upon final disposition of vehicle. Review the following instructions in order to determine which will work best in a given situation.
Deployment / Activation Outside of Vehicle: When you intend to return the vehicle to service, deploy the air bag (inflator) module(s) and/or activate seat belt pretensioner(s) outside of the vehicle.
Deployment / Activation Inside of Vehicle: When the vehicle will be destroyed, or salvaged for component parts, deploy the air bag module(s) and/or activate seat belt pretensioner(s) installed on vehicle.

⚠ WARNING

The following precautions must be observed for this work. Failure to observe any of them may result in personal injury.

- **Procedure should be followed strictly as described here.**
- **Be sure to read "Precautions on Service and Diagnosis of Air Bag System" beforehand.**
- **To avoid accidental deployment / activation, this work should be performed by no more than one person.**
- **Since smoke is produced when air bag (inflator) module is deployed and pretensioner is activated, select well-ventilated area.**
- **Air bag (inflator) module and seat belt pretensioner will immediately deploy / activate when 12 volts vehicle battery is connected to it. Wear safety glasses throughout this entire deployment / activation and disposal procedure.**
- **Wear suitable ear protection when deploying air bag (inflator) module / activating seat belt pretensioner. Also, advise those who are in area close to deployment / activation site to wear suitable ear protection.**
- **Do not deploy / activate two or more air bag system components (air bag (inflator) modules and seat belt pretensioners) at the same time.**
- **Never connect deployment harness to any 12 volts vehicle battery before connecting deployment harness to air bag (inflator) module and seat belt pretensioner. Deployment harness shall remain shorted and not be connected to 12 volts vehicle battery till you are ready to deploy air bag (inflator) module or activate seat belt pretensioner.**

Deployment / Activation Outside of Vehicle

When you intend to return the vehicle to service, deploy the air bag (inflator) module(s) or activate seat belt pretensioner(s) outside of the vehicle.

1) Turn ignition switch to LOCK position and remove key.
2) Wear safety glasses during this deployment / activation procedure.
3) Check that there is no open, short or damage in special tools (deployment harness (A) and adapter cable (B)). If any faulty is found, do not use it and be sure to use new special tool.

   Special tool
   (A): 09932–75031
   (B): 09932–76510

4) Short two deployment harness leads (1) together by fully seating one banana plug into the other.

⚠ WARNING

Deployment harness (A) shall remain shorted and not be connected to 12 volts vehicle battery till you are ready to deploy air bag module or activate seat belt pretensioner.

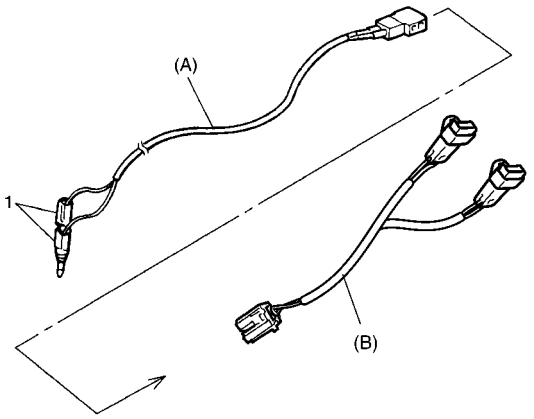

I4RS0A820084-01

5) Remove air bag (inflator) module(s) or seat belt pretensioner(s) from vehicle referring to "Driver Air Bag (Inflator) Module Removal and Installation", "Passenger Air Bag (Inflator) Module Removal and Installation", "Side-Air Bag (Inflator) Module Removal and Installation", "Side Curtain-Air Bag (Inflator) Module Removal and Installation" or "Front Seat Belt Removal and Installation in Section 8A".

⚠ WARNING

- **For handing and storage of live air bag (inflator) module, select place where ambient temperature below 65 °C (150 °F), without high humidity and away from electric noise.**
- **Always carry live air bag (inflator) module with trim cover away from you.**
- **When storing live air bag (inflator) module or when leaving live air bag (inflator) module unattended on bench or other surface, always face trim cover up and away from surface. It is also prohibited to place anything on top of the trim cover and stack air bag (inflator) modules. This is necessary so that free space is provided to allow air bag (inflator) module to expand in the unlikely event of accidental deployment.**

Failure to follow procedures may result in personal injury.

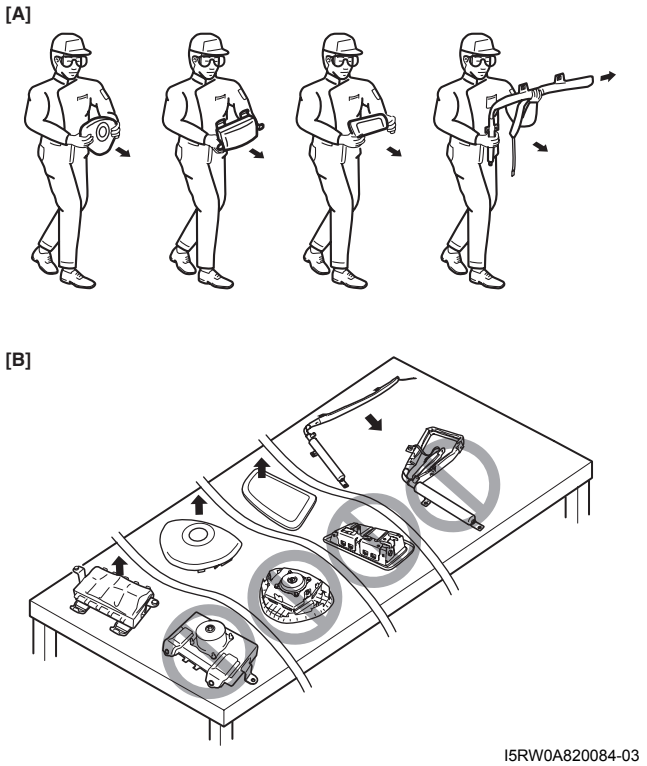

I5RW0A820084-03

[A]:	Always carry air bag (inflator) module with trim cover (air bag opening) away from body.
[B]:	Always place air bag (inflator) module on workbench with trim cover (air bag opening) up, away from loose objects.

⚠ WARNING

- **For handling and storage of seat belt pretensioner, select place where ambient temperature is below 65 °C (150 °F), without high humidity and away from electric noise.**
- **Never carry seat belt pretensioner by webbing.**
- **When placing seat belt pretensioner on workbench or other surface, be sure to lay it with its exhaust hole (1) side facing up. It is also prohibited to put something on seat belt pretensioner.**

Otherwise, personal injury may result.

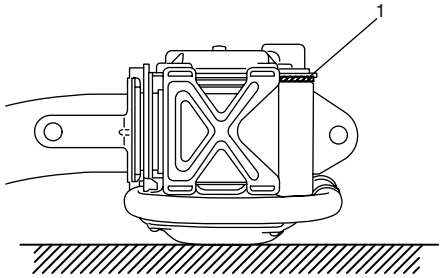

I4JA01822118-01

6) Set air bag (inflator) module or seat belt pretensioner as follows.
   - For driver air bag (inflator) module
     a. Clear space (3) on ground about 185 cm (6 ft) in diameter where driver air bag (inflator) module (1) is set for deployment. Paved, outdoor location where there is no activity is preferred. If outdoor location is not available, use space on shop floor where there is no activity and sufficient ventilation is provided. Ensure no loose or flammable object exists within deployment area.
     b. Place driver air bag (inflator) module (1) with its vinyl trim cover facing up (2) on ground in Step a.

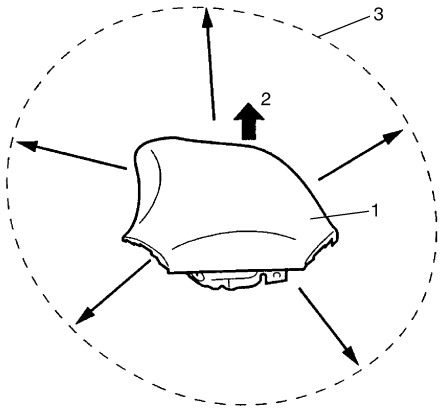

I3JA01820036-01

- For passenger air bag (inflator) module
  a. Clear space (3) on ground about 185 cm (6 ft) in diameter where passenger air bag (inflator) module (1) is set for deployment. Paved, outdoor location where there is no activity is preferred. If outdoor location is not available, use space on shop floor where there is no activity and sufficient ventilation is provided. Ensure no loose or flammable object exists within deployment area.
  b. Place deployment fixture (A) on ground in Step a.

     Special tool
     (A): 09932–75041

  c. Fill plastic reservoir in deployment fixture (A) with water or sand. This is necessary to provide sufficient stabilization of fixture during deployment.
  d. Attach passenger air bag (inflator) module (1) in deployment fixture (A) securely using M8 bolt (2).

⚠ CAUTION

Be sure to use M8 size and 7T strength bolt for fixing passenger air bag (inflator) module (1) to deployment fixture (A).

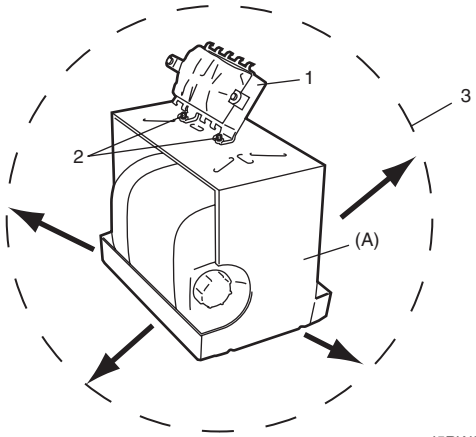

I5RW0A820085-02

- For side-air bag (inflator) module
  a. Remove sleeve (1) and sleeve lock nut (2), if equipped.

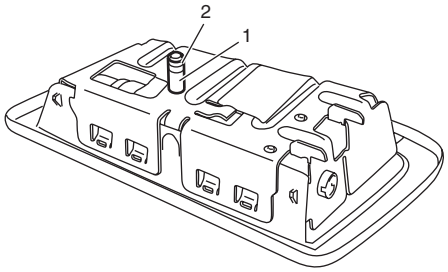

I4RS0A820088-01

  b. Clear space (3) on ground about 185 cm (6 ft) in diameter where side-air bag (inflator) module for deployment. Paved, outdoor location where there is no activity is preferred. If outdoor location is not available, space on shop floor where there is no activity and provide sufficient ventilation. Ensure no loose or flammable objects are within deployment area.
  c. Place deployment fixture (A) on ground.

     Special tool
     (A): 09932–75041

  d. Fill plastic reservoir in deployment fixture (A) with water or sand. This is necessary to provide sufficient stabilization of fixture during deployment.
  e. Attach side-air bag (inflator) module (1) in deployment fixture using mounting attachment, sleeve lock nut and washer (2).

NOTE

Make sure that deploying direction faces as shown in the figure against mounting attachment.

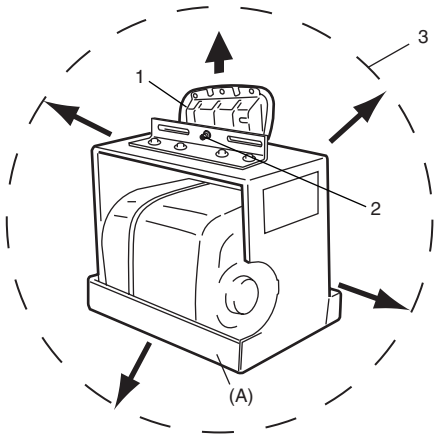

I4RS0A820089-01

- For side curtain-air bag (inflator) module
  a. Cut off bag (1) of side curtain-air bag (inflator) module.

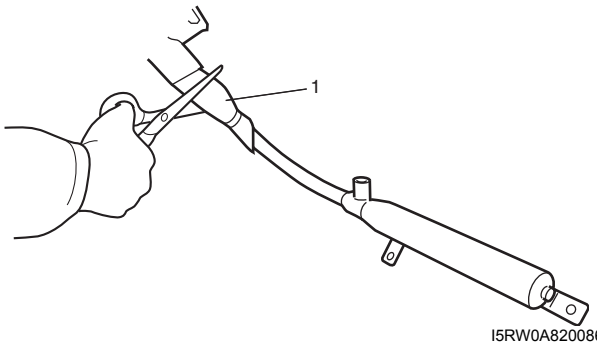

I5RW0A820086-01

  b. Tie side curtain-air bag inflator (1) to tire (3) with wire harness (2) as shown.

     Wire harness specifications
     Stripped wire harness section 1.25 mm^2 (0.0019 in.^{2}) or more (Stripped wire harness diameter 1.25 mm (0.05 in.) or more)

⚠ CAUTION

Make sure that wire harness is tight. It is very dangerous if looseness in wire harness results in side curtain-air bag inflator flying off due to shock from inflator deploying.

NOTE

Wind wire harness (2) around at least 3 times.

  c. Clear space (5) on ground about 185 cm (6 ft) in diameter where side curtain-air bag (inflator) module (1) is set for deployment. Paved, outdoor location where there is no activity is preferred. If outdoor location is not available, use space on shop floor where there is no activity and sufficient ventilation is provided. Ensure no loose or flammable object exists within activation area.
  d. Pile tire with side curtain-air bag (inflator) module on tire (4).

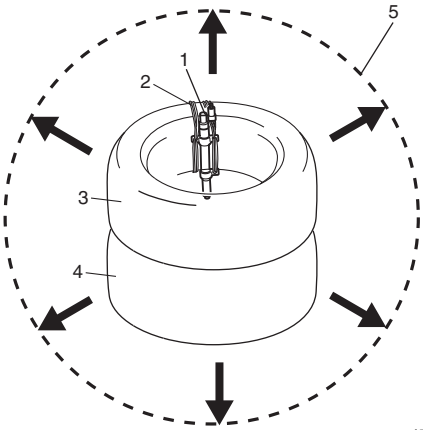

I5JB0A820101-01

- For seat belt pretensioner
  a. Cut webbing (1) at tongue plate stopper (3) of seat belt pretensioner (2) side as shown.

NOTE

Hold seat belt pretensioner (2) vertically in the same condition as it is installed. Otherwise, webbing can't be pulled out.

  b. Remove tongue plate (4) and shoulder anchor (5) from webbing.
  c. Tie webbing (1) tightly at 10 cm (3.9 in.) from cutting edge as shown.

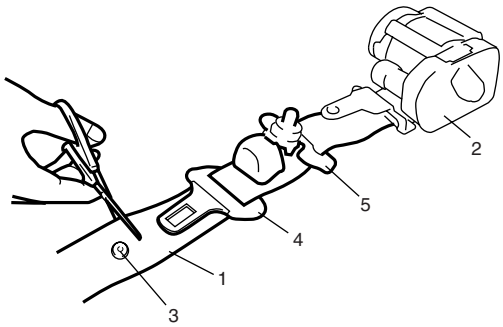

I3JA01820037-01

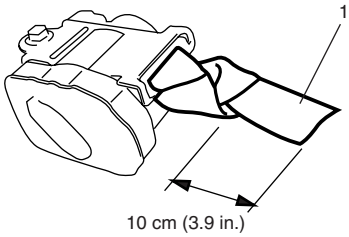

I4RS0A820104-01

d. Tie seat belt pretensioner (2) with wire harness (3) to wheel-installed tire (4) as shown.

Wire harness specifications
Stripped wire harness section 1.25 mm^2 (0.0019 in.^{2}) or more (Stripped wire harness diameter 1.25 mm (0.05 in.) or more)

NOTE

Wind wire harness (3) around at least 3 times.

e. Clear space (5) on ground about 185 cm (6 ft) in diameter where seat belt pretensioner (2) is to be activated. Paved, outdoor location where there is no activity is preferred. If outdoor location is not available, use space on shop floor where there is no activity and sufficient ventilation is provided. Ensure no loose or flammable object exists within activation area.

f. Place wheel-installed tire (4) with seat belt pretensioner (2) on ground in Step e.

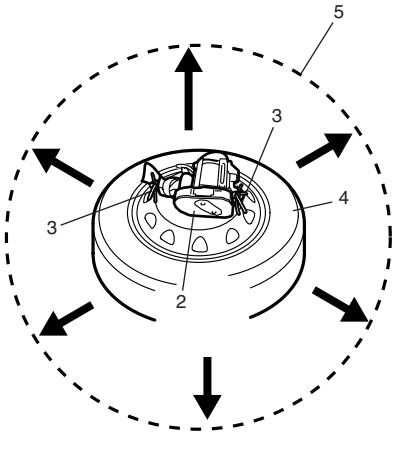

1. Webbing

7) Stretch deployment harness (A) from air bag (inflator) module or seat belt pretensioner to its full length 10 m (33 ft).

Special tool
(A): 09932-75031

8) Place 12 volts vehicle battery (1) near the shorted end of deployment harness (A).

9) Check that area around air bag (inflator) module or seat belt pretensioner is clear of all people and loose or flammable objects.

10) Connect adapter cable (B) as follows.

Special tool
(B): 09932–76510

- For driver air bag (inflator) module [A]:
  Check that driver air bag (inflator) module is placed with its vinyl trim cover facing up, and connect adapter cable (B) to driver air bag (inflator) module.
- For passenger air bag (inflator) module [B]:
  Check that passenger air bag (inflator) module is firmly and properly secured on deployment fixture (special tool), and connect adapter cable (B) to passenger air bag (inflator) module.

NOTE

Wind wire harness (5) around at least 2 times.

- For side-air bag (inflator) module [C]:
  Verify that side-air bag (inflator) module is firmly and properly on deployment fixture (special tool), and connect adapter cable (B) to side-air bag (inflator) module.
- For side curtain-air bag (inflator) module [D]:
  a. Connect adapter cable (B) to side curtain-air bag (inflator) module.
  b. Pile 2 tires (2) and wheel-installed tire (3) on top of tire with side curtain-air bag (inflator) (4), and tie them with wire harness (5) as shown.

  Wire harness specifications
  Stripped wire harness section 1.25 mm^2 (0.0019 in.^{2}) or more (Stripped wire harness diameter 1.25 mm (0.05 in.) or more)

NOTE

Wind wire harness (5) around at least 2 times.

- For seat belt pretensioner [E]:
  a. Connect adapter cable (B) to seat belt pretensioner.
  b. Pile 2 wheel-installed tires (3) on top of tire with seat belt pretensioner (6), and tie them with wire harness (5) as shown.

  Wire harness specifications
  Stripped wire harness section 1.25 mm^2 (0.0019 in.^{2}) or more (Stripped wire harness diameter 1.25 mm (0.05 in.) or more)

NOTE

Wind wire harness (5) around at least 2 times.

c. Drape blanket (7) over those tires.

11) Connect adapter cable (B) to deployment harness (A) connector and lock connectors with lock lever.

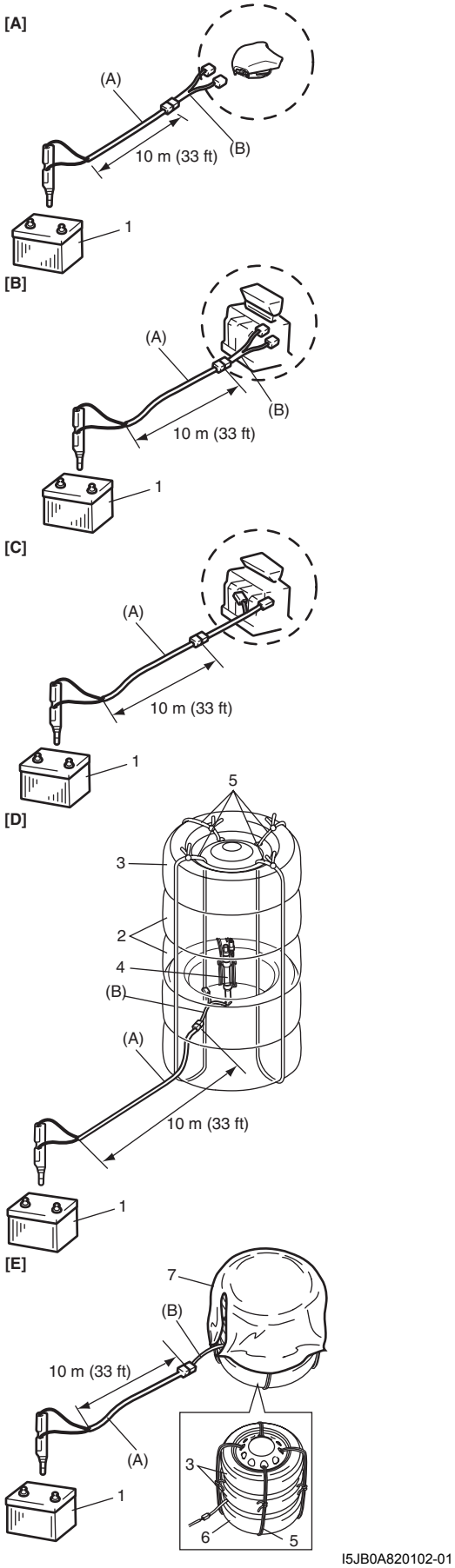

I5JB0A820102-01

12) Notify all people in immediate area that you intend to deploy / activate air bag (inflator) module or seat belt pretensioner.

NOTE

- **When air bag (inflator) module deploys and seat belt pretensioner activates, rapid gas expansion will create substantial report. Wear suitable ear protection. Notify all people in immediate area that you intend to deploy air bag (inflator) module or activate seat belt pretensioner and suitable ear protection should be worn.**
- **When driver air bag (inflator) module deploys, driver air bag (inflator) module may jump about 30 cm (1 ft) vertically. This is normal reaction to force of rapid gas expansion inside of drive air bag (inflator) module.**
- **After air bag (inflator) module has been deployed, surface of air bag (inflator) may contain powdery residue. This powder consists primarily of cornstarch (used to lubricate bag (inflator) as it inflates) and by products of chemical reaction.**

⚠ WARNING

- **Do not place deployed air bag (inflator) module and activated seat belt pretensioner near any flammable objects.**
- **Do not apply water, oil, etc. to deployed air bag (inflator) module and activated seat belt pretensioner.**
- **Wait for about 30 minutes before touching any metal surface of air bag (inflater) module or seat belt pretensioner module. Disregarding these precautions may cause fire or personal injury.**

Failure to follow procedures may result in fire or personal injury.

13) Separate two banana plugs (1) on deployment harness.
14) Connect deployment harness to 12 volts vehicle battery (2). This will immediately deploy or activate air bag (inflator) module or seat belt pretensioner.
15) Disconnect deployment harness from 12 volts vehicle battery (2) and short two deployment harness leads together by fully seating one banana plug into the other.

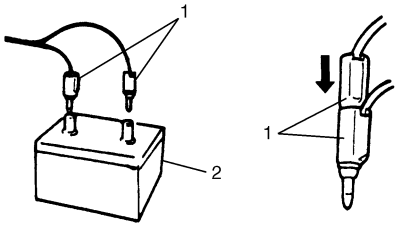

I2RH01820069-01

16) In the unlikely event that air bag (inflator) module or seat belt pretensioner did not deploy / activate after following these procedures, proceed immediately with Step 22) through 25). If air bag (inflator) module or seat belt pretensioner did deploy or activate, proceed with Steps 18) through 21).
17) Put on pair of shop gloves to protect your hands from possible irritation and heat when handling deployed air bag (inflator) module or activated seat belt pretensioner.
18) Disconnect adapter cable (special tool) from air bag (inflator) module or seat belt pretensioner as soon as possible. This will prevent adapter cable (special tool) from damage due to possible contact with hot air bag (inflator) module or hot seat belt pretensioner.
19) Check adapter cable as follows.
    - For air bag (inflator) module
      Be sure to check air bag (inflator) module adapter cable (special tool) for damage after deployment and replace it with new adapter cable (special tool), if it is damaged.
    - For seat belt pretensioner
      Be sure to check seat belt pretensioner adapter cable (special tool) for damage after seat belt pretensioner is activated. Replace it with spare connector (special tool) or new adapter, if necessary.
20) Dispose of deployed air bag (inflator) module (1) or activated seat belt pretensioner (2) through normal refuse channels after it has cooled for at least 30 minutes and tightly seal air bag (inflator) module (1) or seat belt pretensioner (2) in strong vinyl bag. Refer to “Deployed Air Bag (Inflator) Module and Activated Seat Belt Pretensioner Disposal” for details.

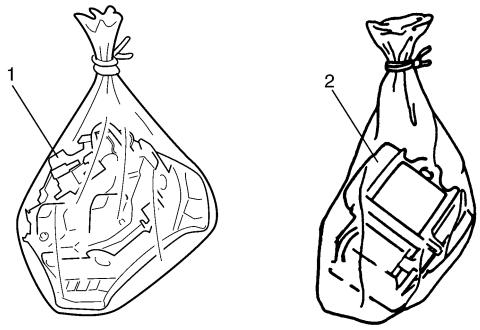

I3JA01820116-01

21) Wash your hands with mild soap and water afterward.

NOTE

Remaining steps are to be followed in the unlikely event that air bag (inflator) module did not deploy or seat belt pretensioner did not activate.

22) Ensure that deployment harness has been disconnected from 12 volts vehicle battery and that its two banana plugs have been shorted together by fully seating one banana plug into the other.
23) Disconnect deployment harness and adapter cable from air bag (inflator) module or seat belt pretensioner.
24) Temporarily store undeployed air bag (inflator) module referring to “Precautions on Service and Diagnosis of Air Bag System” for details.
25) Contact your local distributor for further assistance.

Deployment / Activation Inside of Vehicle

When the vehicle will be destroyed, or salvaged for component parts, deploy the air bag modules and/or activate seat belt pretensioners installed on vehicle.

NOTE

If equipped with the seat belt pretensioners, activate both side of seat belt pretensioners at the same time when using special tool (C).

1) Turn ignition switch to LOCK position, remove key and put on safety glasses.
2) Remove all loose objects from front seats and instrument panel.
3) Disconnect air bag (inflator) module or seat belt pretensioner connector as follows.
   - For driver air bag (inflator) module [A]
     Remove driver side front pillar lower trim and disconnect driver air bag (inflator) module connector (1).
   - For passenger air bag (inflator) module [B]
     Remove passenger side front pillar lower trim and disconnect passenger air bag (inflator) module connector (2).
   - For side-air bag (inflator) module [C]
     Disconnect side-air bag (inflator) module connectors (3) under front seat cushion.
   - For side curtain-air bag (inflator) module (hatchback model) [D]
     Remove right-side rear quarter lower trim and disconnect side curtain-air bag (inflator) module connector (4).
   - For side curtain-air bag (inflator) module (sedan model) [E]
     Remove rear piller inner trim and disconnect side curtain-air bag (inflator) module connector (6).
   - For seat belt pretensioners (right and left) [F]
     Remove both side (driver and passenger side) center pillar lower trim and disconnect seat belt pretensioner connectors (5).
4) Confirm that each air bag (inflator) module and/or seat belt pretensioners is securely mounted.

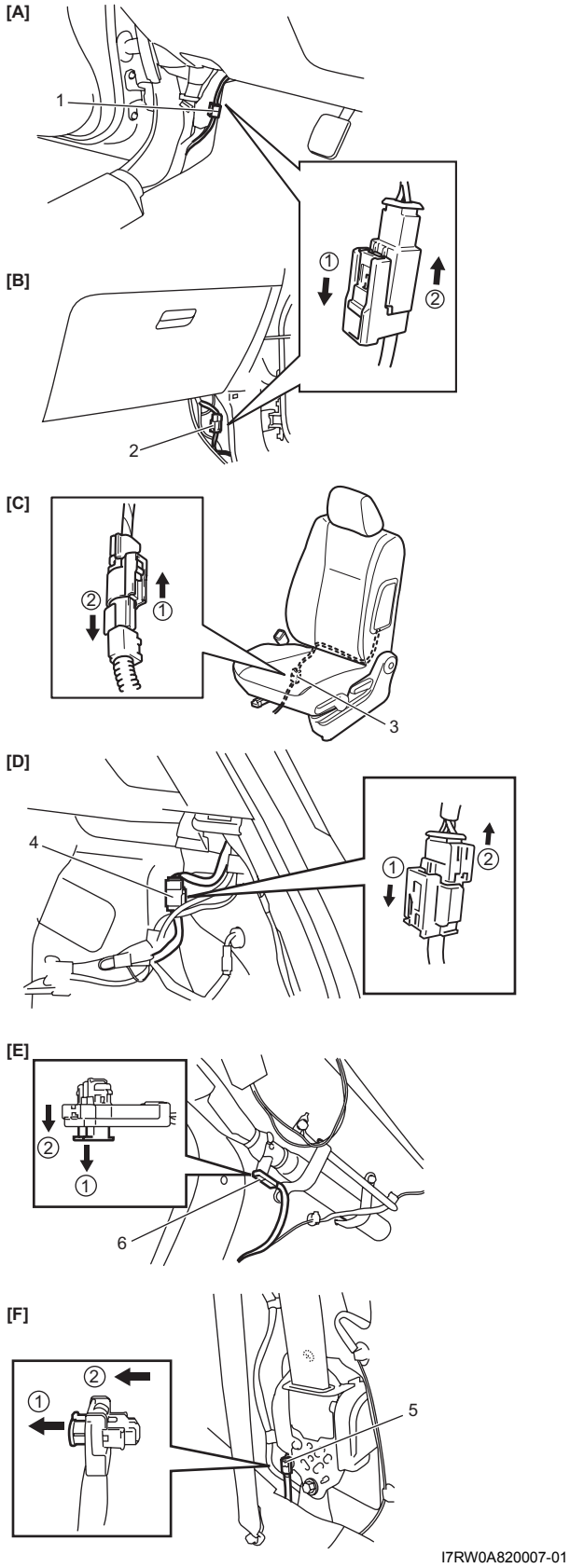

5) Check that there is no open, short or damage in special tools (deployment harness (A), adapter cable (B), (C) and (D)). If any faulty condition is found, do not use it and be sure to use new special tool. And connect adapter cable (B), (C) or (D) to deployment harness (A) and lock connectors with lock slider.

Special tool
(A): 09932–75031
(B): 09932–78332
(C): 09932–77310
(D): 09932–76510

6) Short two deployment harness leads together by fully seating one banana plug (1) into the other.

⚠ WARNING

Deployment harness (A) shall remain shorted and not be connected to 12 volts vehicle battery until you are ready to deploy air bag (inflator) module or activate seat belt pretensioner.

7) Connect adapter cable (B), (C) or (D) in series with deployment harness (A) to air bag (inflator) module or seat belt pretensioner as follows.
   - For driver air bag (inflator) module [A]
     Connect adapter cable (B) in series with deployment harness (A) and push adapter cable (B) connector to air bag (inflator) module connector till click can be heard.
   - For passenger air bag (inflator) module [B]
     Connect adapter cable (B) in series with deployment harness (A) and push adapter cable (B) connector to air bag (inflator) module connector till click can be heard.
   - For side-air bag (inflator) module [C]
     Connect adapter cable (B) in series with deployment harness (A) and push adapter cable (B) connector to side bag (inflator) module connector till click can be heard.
   - For side curtain-air bag (inflator) module (hatchback model) [D]
     Connect adapter cable (C) in series with deployment harness (A) and push adapter cable (C) connector to air bag (inflator) module connector till click can be heard.
   - For side curtain-air bag (inflator) module (sedan model) [E]
     Connect adapter cable (D) in series with deployment harness (A) to air bag (inflator) module and lock connect with lock part.
   - For seat belt pretensioners [F]
     Connect adapter cable (D) in series with deployment harness (A) to seat belt pretensioner and lock connector with lock part.

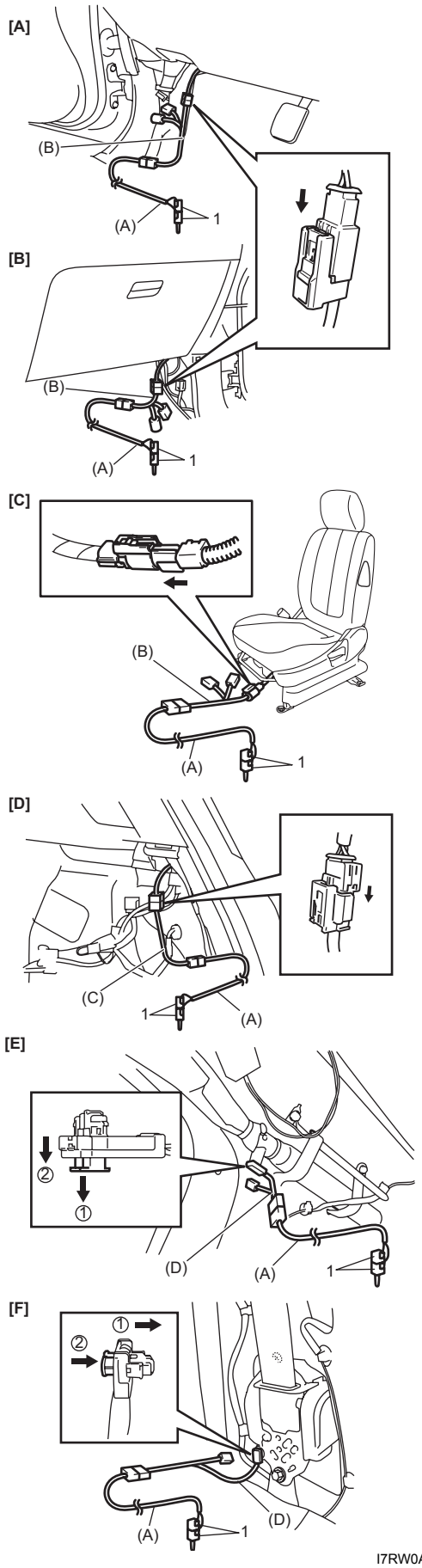

I7RW0A820006-01

8) Route deployment harness (1) out of vehicle.
9) Check that inside of vehicle and area surrounding vehicle are clear of all people and loose or flammable objects.
10) Stretch deployment harness (1) to its full length 10 m (33 ft).
11) Place 12 volts vehicle battery (2) near shorted end of deployment harness (1).
12) Completely cover windshield area and front door window openings with drop cloth, a blanket or any similar item. This reduces possibility of injury due to possible fragmentation of vehicle's glass or interior.

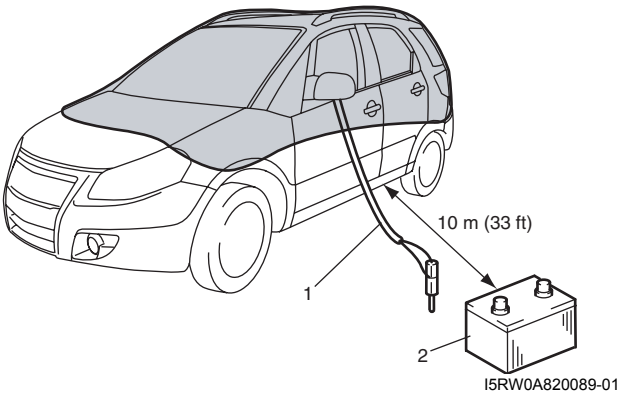

13) Notify all people in immediate area that you intend to deploy air bag (inflator) module or activate seat belt pretensioners.

NOTE

- **When air bag (inflator) module deploys or seat belt pretensioners activate, rapid gas expansion will create substantial report. Wear suitable ear protection. Notify all people in immediate area that you intend to deploy air bag (inflator) module or to activate seat belt pretensioner and suitable ear protection should be worn.**
- **After air bag (inflator) module has been deployed, surface of air bag may contain powdery residue. This powder consists primarily of cornstarch (used to lubricate air bag (inflator) module as it inflates) and by-products of chemical reaction.**

⚠ WARNING

- **Do not place deployed air bag (inflator) module and activated seat belt pretensioners near any flammable objects.**
- **Do not apply water, oil, etc. to deployed air bag (inflator) module and activated seat belt pretensioners.**
- **Wait for about 30 minutes before touching any metal surface of air bag (inflater) module or seat belt pretensioner modules. Disregarding these precautions may cause fire or personal injury.**

Failure to follow procedures may result in fire or personal injury.

14) Separate two banana plugs (1) on deployment harness (2).
15) Connect deployment harness (2) to 12 volts vehicle battery (3). This will immediately deploy or activate air bag (inflator) module or seat belt pretensioners.
16) Disconnect deployment harness (2) from 12 volts vehicle battery (3) and short two deployment harness leads together by fully seating one banana plug into the other.

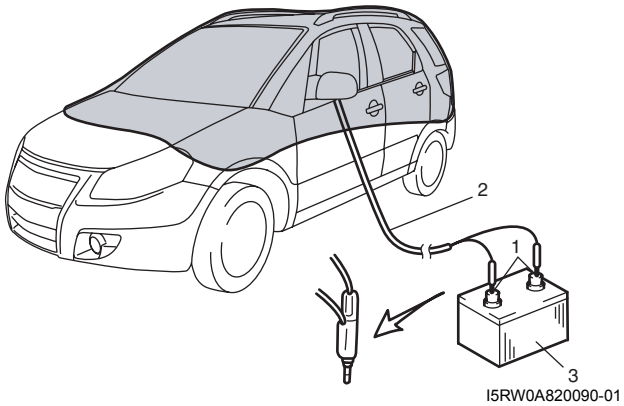

17) Repeat Steps 3) through 16) to deploy / activate air bag (inflator) modules and seat belt pretensioners which has not been deployed / activated, if any.
18) In the unlikely event that air bag (inflator) module and seat belt pretensioners after following these procedures, proceed immediately with Step 24) through 26). If air bag (inflator) module and seat belt pretensioners did deploy / activate, proceed with Steps 19) through 23).
19) Carefully remove drop cloth from vehicle and clean off any fragments or discard it entirely.
20) Put on pair of shop gloves to protect your hands from possible irritation and heat when handling deployed air bag (inflator) module and activated seat belt pretensioners.

21) Disconnect adapter cable (special tool) from air bag (inflator) module or seat belt pretensioner as soon as possible. This will prevent adapter cable (special tool) from damage due to possible contact with hot air bag (inflator) module or hot seat belt pretensioner.
22) Check adapter cable connector as follows.
Adapter cable connector (special tool) is designed to be reused. However it should be inspected for damage after deployment and replaced if necessary.
23) With air bag (inflator) modules deployed and seat belt pretensioners activated, vehicle may be scrapped in the same manner as non-air bag system / seat belt pretensioner equipped vehicle.

NOTE

Remaining steps are to be followed in the unlikely event that air bag (inflator) module did not deploy or seat belt pretensioner did not activate.

24) Remove undeployed air bag (inflator) module(s) and/or inactivated seat belt pretensioner(s) from vehicle. For driver air bag (inflator) module, refer to “Driver Air Bag (Inflator) Module Removal and Installation”. For passenger air bag (inflator) module, refer to “Passenger Air Bag (Inflator) Module Removal and Installation”. For side air bag (inflator) module, refer to “Side-Air Bag (Inflator) Module Removal and Installation”. For side curtain-air bag (inflator) module, refer to “Side Curtain-Air Bag (Inflator) Module Removal and Installation”. For seat belt pretensioner, refer to “Front Seat Belt Removal and Installation in Section 8A”.
25) Temporarily store undeployed air bag (inflator) module referring to “Precautions on Service and Diagnosis of Air Bag System” for details.
26) Contact your local distributor for further assistance.

Deployed Air Bag (Inflator) Module and Activated Seat Belt Pretensioner Disposal

S7RW0A8206019

⚠ WARNING

Failure to follow proper air bag (inflator) module and seat belt pretensioner disposal procedures can result in air bag deployment and pretensioner activation which may cause personal injury. The undeployed air bag (inflator) module and the inactivated seat belt pretensioner must not be disposed of through normal refuse channels.
The undeployed air bag (inflator) module and the inactivated seat belt pretensioner contains substances that can cause severe illness or personal injury if the sealed container is damaged during disposal.

Deployed air bag (inflator) module and the activated seat belt pretensioner can be disposed of through normal refuse channels just like any other parts. For their disposal, however, the following points should be noted.

- The air bag (inflator) module and the seat belt pretensioner immediately after deployment / activation is very hot. Wait for 30 minutes to cool it off before handling it.
- Never apply water, oil, etc. to deployed air bag (inflator) module and the activated seat belt pretensioner to cool it off and be careful so that water, oil etc. does not get on the deployed air bag (inflator) module and the activated seat belt pretensioner.

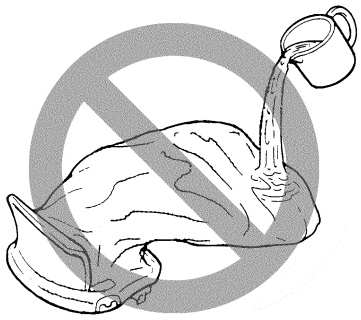

IYSQ01820095-01

- After the air bag (inflator) module has been deployed, the surface of the air bag may contain a powdery residue. This powder consists primarily of cornstarch (used to lubricate the bag as it inflates) and by-products of the chemical reaction. As with many service procedures, you should wear gloves and safety glasses.
- When disposing of the deployed air bag (inflator) module and the activated seat belt pretensioner, be sure to seal it in a vinyl bag.

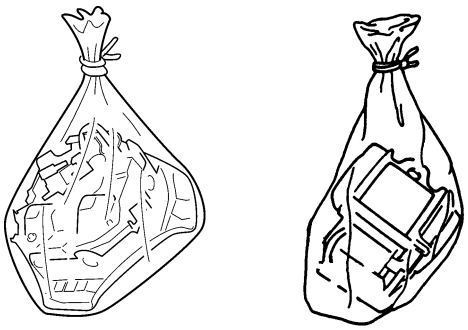

I3JA01820119-01

- When air bag (inflator) module and seat belt pretensioner have been deployed / activated inside the vehicle which is going to be scrapped, leave them as installed to the vehicle.
- Be sure to wash your hands with mild soap and water after handling them.

Specifications

Tightening Torque Specifications

S7RW0A8207001

Fastening part	Tightening torque			Note
	N·m	kgf-m	lb-ft	
SDM bolt	9	0.9	6.5	☞
Driver air bag (inflator) module mounting bolt	9	0.9	6.5	☞
Passenger air bag (inflator) module attaching bolt	23	2.3	17.0	☞
Sleeve lock nut	2.5	0.25	2.0	☞
Side curtain-air bag (inflator) module attaching bolts	11	1.1	8.0	☞
Forward impact-sensor mounting bolt	9	0.9	6.5	☞
Side impact-sensor bolt	9	0.9	6.5	☞

NOTE

The specified tightening torque is also described in the following.
“Side-Air Bag (Inflator) Module Removal and Installation”

Reference:
For the tightening torque of fastener not specified in this section, refer to “Fasteners Information in Section 0A”.

Special Tools and Equipment

Use of Special Tools

S7RW0A8208001

⚠ WARNING

To avoid deployment when troubleshooting the air bag system, do not use electrical equipment such as a battery powered or AC powered voltmeter, ohmmeter, etc., or any type of electrical equipment other than that specified. Do not use a non-powered probe type tester.
Instructions must be followed carefully, otherwise personal injury may result.

You should be familiar with the tools listed under the heading “Special Tool”. You should be able to measure voltage and resistance. You should be familiar with proper use of a scan tool such as Air Bag Driver / Passenger Load Tool, Connector Test Adapter Kit and the Digital Multimeter.

Special tool
(A): 09932–76010 Connector Test Adapter Kit

This must be used whenever a diagnostic procedure requests checking or probing a terminal.
Using the appropriate adapter in the special tool will ensure that no damage to the terminal will occur from the multimeter probe, such as spreading or bending.

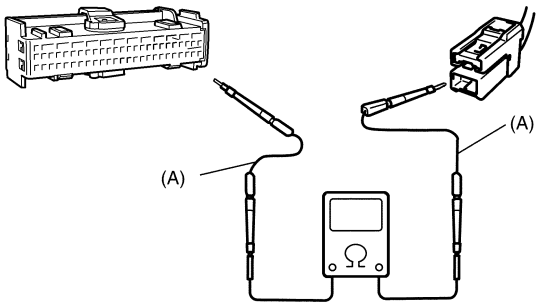

I7RW01822127-01

The adapter (1) will also give an idea of whether or not contact tension is sufficient, helping to find an open or intermittent open due to poor terminal contact. An SDM short bar release tool (2) is included in the connector test adapter kit. Inserting it into the SDM connector (3) will releases the shorting bar.

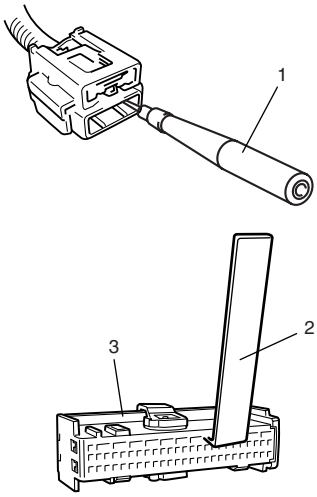

I4RS0A820108-01

Special tool
(B): 09932–75010 Air bag driver / passenger load tool

This tool is used as a diagnostic aid and safety device to prevent inadvertent air bag (inflator) module deployment. The load tool has three connectors attached to its case which are electrically functional and serve as resistive load substitutions.
No more than two connectors are used at any time.
One of connectors (“STEERING WHEEL”) is used to substitute the load of the followings.

- Driver air bag (inflator) module when it is connected at the top of the column to the contact coil assembly.
- Passenger air bag (inflator) module when it is connected to the air bag harness connector in instrument panel harness for passenger air bag (inflator) module.
- Each of driver and passenger seat belt pretensioners when it is connected to air bag harness connector in instrument panel harness for driver and passenger seat belt pretensioners.
- Side-air bag (inflator) module when it is connected to the floor harness connector for side-air bag (inflator) module.
- Side curtain-air bag (inflator) module when it is connected to the floor harness connector for side curtain-air bag (inflator) module.

Another connector (“BASE OF COLUMN”) is used to substitute the load of the driver air bag (inflator) module and the contact coil assembly when it is connected at the base of the column to the air bag wire harness.
The third connector (“PASSENGER INFLATOR”) is not used.
By substituting the resistance of the load tool when called for, a determination can be made as to whether an inflator circuit component is causing system malfunction and which component is causing the malfunction.
The load tool should be used only when specifically called for in the diagnostic procedures.

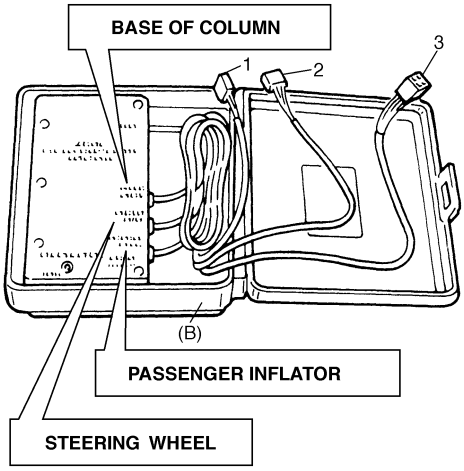

I1JA01820004-01

1.	Connector for contact coil and driver air bag (inflator) module (Located near the base of the steering column)
2.	Connector for driver, passenger air bag (inflator) module, side-air bag (inflator) module and driver and passenger seat belt pretensioners
3.	Not used

Special Tool

S7RW0A8208002

09932–75010 Air bag load tool ☞ / ☞ / ☞ / ☞ / ☞ / ☞ / ☞ / ☞ / ☞ / ☞ / ☞ 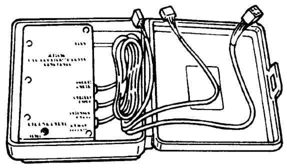	09932–75031 Air bag deployment harness ☞ / ☞ / ☞ 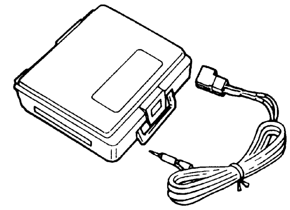
09932–75041 Passenger air bag (inflator) module deployment fixture ☞ / ☞ 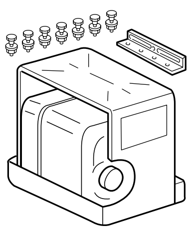	09932–76010 Connector test adapter set This set includes the following items. 1. Connector test adapter kit (09932-75020), 2. Connector test adapter & shorting bar release tool (09932-76020)☞ / ☞ 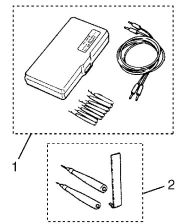
09932–76510 Deployment adapter cable ☞ / ☞ / ☞ 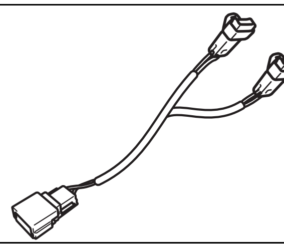	09932–77310 Deployment adapter cable 4P ☞ 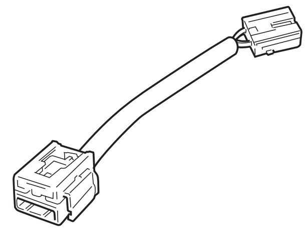
09932–78310 Adapter cable ☞ / ☞ / ☞ / ☞ / ☞ / ☞ / ☞ / ☞ / ☞ 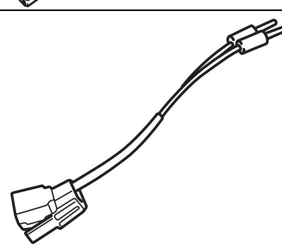	09932–78332 Deployment adapter cable ☞ 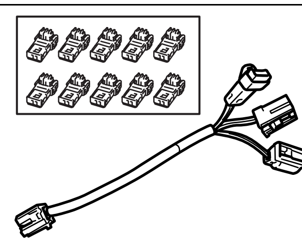
09932–78340 Deployment adapter cable ☞ / ☞ 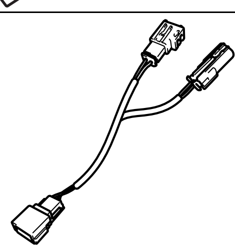	SUZUKI scan tool — This kit includes following items. 1. Tech 2, 2. PCMCIA card, 3. DLC cable, 4. SAE 16/19 adapter, 5. Cigarette cable, 6. DLC loop back adapter, 7. Battery power cable, 8. RS232 cable, 9. RS232 adapter, 10. RS232 loop back connector, 11. Storage case, 12.☞ / ☞ 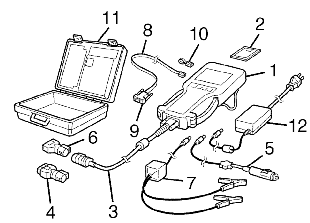

Section 9

Body, Cab and Accessories

CONTENTS

Precautions 9-1
- **Precautions 9-1**
  - Precautions on Body, Cab and Accessories 9-1
  - Precautions for Body Service 9-1
  - Fastener Caution for Body Service 9-1

Wiring Systems 9A-1
- **Precautions 9A-1**
  - Cautions in Body Electrical System Servicing 9A-1
- **General Description 9A-1**
  - Abbreviations 9A-1
  - Wire / Connector Color Symbols 9A-1
  - Symbols and Marks 9A-2
  - How to Read Connector Layout Diagram 9A-4
  - How to Read Connector Codes and Terminal Nos. 9A-5
  - How to Read Ground Point 9A-8
  - How to Read Power Supply Diagram 9A-9
  - How to Read System Circuit Diagram 9A-9
- **Connector Layout Diagram 9A-11**
  - Connector Layout Diagram 9A-11
  - Engine Compartment 9A-11
  - Instrument Panel 9A-22
  - Door, Roof 9A-28
  - Floor 9A-32
  - Rear 9A-42
- **Ground Point 9A-43**
  - Ground (earth) Point 9A-43
- **Power Supply Diagram 9A-44**
  - Power Supply Diagram 9A-44
  - Fuses and the Protected Parts 9A-46
  - Fuses in Main Fuse Box 9A-46
  - Individual Circuit Fuse Box No. 1 ..... 9A-47
  - Individual Circuit Fuse Box No. 2 (In J/B (Except Taiwan)) 9A-48
  - Individual Circuit Fuse Box No. 2 (In J/B (Taiwan)) 9A-50
  - Individual Circuit Fuse Box No.3 (Sedan) 9A-52
  - Junction Block (J/B) Connector / Fuse Layout 9A-53
  - Junction Block Inner Circuit (Overview (Except Taiwan)) 9A-54
  - Junction Block Inner Circuit (Detail (Except Taiwan)) 9A-56
  - Junction Block Inner Circuit (Overview (Taiwan)) 9A-61
  - Junction Block Inner Circuit (Detail (Taiwan)) 9A-63
- **System Circuit Diagram 9A-68**
  - System Circuit Diagram 9A-68
  - A-1 Cranking System Circuit Diagram 9A-70
  - A-2 Charging System Circuit Diagram 9A-71
  - A-3 Ignition System Circuit Diagram (M15A engine, M16A engine) 9A-72
  - A-3 Ignition System Circuit Diagram (J20A engine) 9A-73
  - A-4 Cooling System Circuit Diagram (M15A engine, M16A engine) 9A-74
  - A-4 Cooling System Circuit Diagram (J20A engine) 9A-75
  - A-5 Engine and A/C Control System Circuit Diagram (M15A engine) 9A-76
  - A-5 Engine and A/C Control System Circuit Diagram (M16A engine) 9A-80
  - A-5 Engine and A/C Control System Circuit Diagram (J20A engine) 9A-84
  - A-6 A/T Control System Circuit Diagram 9A-88
  - A-7 Immobilizer System Circuit Diagram 9A-90
  - A-8 Body Control System Circuit Diagram (Except Taiwan) 9A-91
  - A-8 Body Control System Circuit Diagram (Taiwan) 9A-95
  - A-10 4WD Control System (Except Taiwan) 9A-99
  - B-1 Windshield Wiper and Washer Circuit Diagram 9A-100
  - B-2 Rear Wiper and Washer Circuit Diagram (Except Taiwan) 9A-101
  - B-2 Rear Wiper and Washer Circuit Diagram (Taiwan) 9A-102
  - B-3 Rear Defogger Circuit Diagram (Hatchback (Except Taiwan)) 9A-103
  - B-3 Rear Defogger Circuit Diagram (Hatchback (Taiwan)) 9A-104
  - B-3 Rear Defogger Circuit Diagram (Sedan) 9A-105
  - B-4 Power Window Circuit Diagram 9A-106
  - B-5 Power Door Lock Circuit Diagram (Except Taiwan) 9A-108
  - B-5 Power Door Lock Circuit Diagram (Taiwan) 9A-110

B-6 Power Mirror Circuit Diagram (Hatchback (Except Taiwan)) 9A-112
B-6 Power Mirror Circuit Diagram (Hatchback (Taiwan)) 9A-113
B-6 Power Mirror Circuit Diagram (Sedan (Except Taiwan)) 9A-114
B-6 Power Mirror Circuit Diagram (Sedan (Taiwan)) 9A-115
B-7 Horn Circuit Diagram 9A-116
B-8 Seat Heater Circuit Diagram 9A-117
B-9 Keyless Start System Circuit Diagram 9A-118
C-1 Combination Meter Circuit Diagram (Meter) 9A-119
C-2 Combination Meter Circuit Diagram (Indicator) 9A-120
C-3 Combination Meter Circuit Diagram (Warning Light) 9A-121
D-1 Headlight System Circuit Diagram (Except Taiwan) 9A-123
D-1 Headlight System Circuit Diagram (Taiwan) 9A-125
D-2 Position, Tail and Licence Plate Light System Circuit Diagram (Hatchback (Except Taiwan)) 9A-126
D-2 Position, Tail and Licence Plate Light System Circuit Diagram (Sedan (Except Taiwan)) 9A-127
D-2 Position, Tail and Licence Plate Light System Circuit Diagram (Hatchback (Taiwan)) 9A-128
D-2 Position, Tail and Licence Plate Light System Circuit Diagram (Sedan (Taiwan)) 9A-129
D-3 Front Fog Light System Circuit Diagram (Except Taiwan) 9A-130
D-3 Front Fog Light System Circuit Diagram (Taiwan) 9A-131
D-4 Illumination Light System Circuit Diagram (Except Taiwan) 9A-132
D-4 Illumination Light System Circuit Diagram (Taiwan) 9A-133
D-5 Interior Light System Circuit Diagram (Hatchback (Except Taiwan)) 9A-134
D-5 Interior Light System Circuit Diagram (Hatchback (Taiwan)) 9A-135
D-5 Interior Light System Circuit Diagram (Sedan (Except Taiwan)) 9A-136
D-5 Interior Light System Circuit Diagram (Sedan (Taiwan)) 9A-137
D-6 Turn Signal and Hazard Warning Light System Circuit Diagram (Hatchback (Except Taiwan)) 9A-138
D-6 Turn Signal and Hazard Warning Light System Circuit Diagram (Sedan (Except Taiwan)) 9A-140
D-6 Turn Signal and Hazard Warning Light System Circuit Diagram (Hatchback (Taiwan)) 9A-142
D-6 Turn Signal and Hazard Warning Light System Circuit Diagram (Sedan (Taiwan)) 9A-144
D-7 Brake Light System Circuit Diagram (Hatchback) 9A-146
D-7 Brake Light System Circuit Diagram (Sedan) 9A-147
D-8 Back-Up Light System Circuit Diagram (Hatchback) 9A-148
D-8 Back-Up Light System Circuit Diagram (Sedan) 9A-149
D-9 Headlight Beam Leveling System Circuit Diagram (Manual Leveling) 9A-150
D-10 Rear Fog Light Circuit Diagram (Hatchback) 9A-151
D-10 Rear Fog Light Circuit Diagram (Sedan) 9A-152
E-1 Heater System Circuit Diagram 9A-153
E-2 Auto A/C System Circuit Diagram 9A-155
F-1 Air-Bag System Circuit Diagram (4ch) 9A-157
F-1 Air-Bag System Circuit Diagram (8ch) 9A-158
F-2 Anti-Lock Brake System Circuit Diagram 9A-160
F-3 Electronic Stability Program System Circuit Diagram 9A-162
F-4 Power Steering System Circuit Diagram 9A-164
G-1 Audio System Circuit Diagram 9A-166
G-2 Multi Information Display / Accessory Socket System Circuit Diagram 9A-168
G-4 Navigation System Circuit Diagram 9A-169
List of Connector 9A-171
List of Connectors 9A-171
C Connector 9A-171
E Connector 9A-172
G Connector 9A-174
J Connector 9A-176
K Connector 9A-177
L Connector 9A-177
M Connector (Sedan) 9A-180
O Connector (Hatchback) 9A-180
Q Connector (8ch) 9A-181
R Connector 9A-181
S Connector 9A-181

Lighting Systems 9B-1

Precautions 9B-1
Precautions for Discharge Headlight Service (If Equipped) 9B-1
Precautions in Diagnosing Troubles (Headlight Auto Leveling System) 9B-1
General Description 9B-1
Discharge Headlight Description (If Equipped) 9B-1
Headlight Auto Leveling System Description (If Equipped) 9B-2
Auto-On Headlight System Description (If Equipped) 9B-4
Schematic and Routing Diagram 9B-5
Headlight Auto Leveling System Wiring Circuit Diagram 9B-5
Component Location 9B-5
Lighting System Components Location 9B-5
Interior Light System Location 9B-7
Diagnostic Information and Procedures 9B-7

Self-Diagnosis Function for Headlight Auto Leveling System 9B-7
Headlight Leveling Warning Light Check 9B-8
Headlight Symptom Diagnosis (Discharge Headlight Model) 9B-8
Headlight Symptom diagnosis (Other than Discharge Headlight Model) 9B-9
Auto-On Headlight System Symptom Diagnosis (If Equipped) 9B-9
DRL System Symptom Diagnosis (If Equipped) 9B-10
Headlight Auto Leveling System Symptom Diagnosis (If Equipped) 9B-10
Headlight Manual Leveling System Symptom Diagnosis (If Equipped) 9B-10
Turn Signal and Hazard Warning Light Symptom Diagnosis 9B-11
Clearance, Tail and License Plate Light Symptom Diagnosis 9B-11
Back-Up Light Symptom Diagnosis 9B-12
Brake Light Symptom Diagnosis 9B-12
Front Fog Light Symptom Diagnosis (If Equipped) 9B-12
Rear Fog Light Symptom Diagnosis (If Equipped) 9B-12
Illumination Cancel System Symptom Diagnosis (If Equipped) 9B-13
Interior Light Symptom Diagnosis 9B-13
DRL Operation Inspection (If Equipped) 9B-13
Inspection of DRL Controller and Its Circuits (If Equipped) 9B-14
Auto-On Headlight Operation Inspection (If Equipped) 9B-15
Inspection of Auto-On Headlight Controller and Its Circuit (If Equipped) 9B-15
Inspection of Headlight Leveling Control Module and Its Circuit (Headlight Auto Leveling System) 9B-16
Repair Instructions 9B-18
Headlight Housing Removal and Installation 9B-18
Headlight Bulb Replacement (Discharge Headlight Model) 9B-19
Ballast Removal and Installation (Discharge Headlight Model) 9B-19
Igniter Removal and Installation (Discharge Headlight Model) 9B-20
Headlight Aiming Adjustment with Screen 9B-20
Headlight Switch (in Lighting Switch) Removal and Installation 9B-22
Headlight Switch (in Lighting Switch) Inspection 9B-22
Hazard Warning Switch Removal and Installation 9B-23
Hazard Warning Switch Inspection 9B-23
Brake Light Switch Inspection 9B-23
Turn Signal Light Switch (in Lighting Switch) Removal and Installation 9B-24
Turn Signal Light Switch (in Lighting Switch) Inspection 9B-24
Turn Signal and Hazard Warning Relay Removal and Installation 9B-24
Turn Signal and Hazard Warning Relay Inspection 9B-25
License Light Assembly Removal and Installation (Hatchback) 9B-25
License Light Removal and Installation (Sedan) 9B-26
Front Fog Light Assembly Removal and Installation (If Equipped) 9B-26
Front Fog Light Switch Inspection (If Equipped) 9B-27
Front Fog Light Aiming Adjustment with Screen (If Equipped) 9B-27
Rear Fog Light Switch Inspection (If Equipped) 9B-28
Headlight Manual Levering Switch Inspection (If Equipped) 9B-29
Headlight Leveling Actuator Inspection (If Equipped) 9B-29
Height Sensor Removal and Installation (If Equipped) 9B-30
Height Sensor and Its Circuit Inspection (If Equipped) 9B-31
Headlight Leveling Control Module Removal and Installation (If Equipped) 9B-31
Initialization of Headlight Auto Leveling System 9B-31
Auto-On Headlight Sensor Inspection (If Equipped) 9B-32
Illumination Cancel Switch Inspection (If Equipped) 9B-33
Tail Light Relay, Headlight Relay, Front Fog Light Relay Inspection (If Equipped) 9B-33
Specifications 9B-34
Tightening Torque Specifications 9B-34

Instrumentation / Driver Info. / Horn 9C-1

Precautions 9C-1
Precautions in Diagnosing Troubles for Combination Meter 9C-1
General Description 9C-1
CAN Communication System Description 9C-1
Auto Volume Control System Description (If Equipped) 9C-3
Schematic and Routing Diagram 9C-4
Combination Meter Circuit Diagram 9C-4
Component Location 9C-6
Audio System Component Location 9C-6
Diagnostic Information and Procedures 9C-7
Speedometer and VSS Symptom Diagnosis 9C-7
Tachometer Symptom Diagnosis 9C-7
Engine Coolant Temperature (ECT) Meter Symptom Diagnosis 9C-7
Fuel Meter Symptom Diagnosis 9C-7
Low Fuel Warning Light Symptom Diagnosis 9C-8
Oil Pressure Warning Light Symptom Diagnosis 9C-8

Brake and Parking Brake Warning Light Symptom Diagnosis 9C-9
Seat Belt Reminder Light Symptom Diagnosis 9C-9
A/T Shift Position Indicator Symptom Diagnosis (A/T Model) 9C-9
Charge Warning Light Symptom Diagnosis 9C-10
Main Beam (High Beam) Indicator Symptom Diagnosis 9C-10
Warning Buzzer Circuit Symptom Diagnosis 9C-10
Cigarette Lighter Symptom Diagnosis (If Equipped)....9C-11
Horn Symptom Diagnosis 9C-11
Information Display Symptom Diagnosis (If Equipped)....9C-11
Clock System Diagnosis (If Equipped)....9C-12
Audio System Symptom Diagnosis (If Equipped)....9C-13
Remote Audio Control Switch Symptom Diagnosis (If Equipped)....9C-14
Navigation Symptom Diagnosis (If Equipped)...9C-14
Repair Instructions 9C-15
Ignition Switch Removal and Installation....9C-15
Ignition Switch Inspection....9C-15
Combination Meter Removal and Installation ...9C-15
Fuel Level Sensor Removal and Installation....9C-16
Fuel Level Sensor Inspection....9C-16
Oil Pressure Switch Removal and Installation ..9C-16
Oil Pressure Switch Inspection 9C-16
Engine Coolant Temperature (ECT) Sensor Inspection....9C-17
Brake Fluid Level Switch Inspection 9C-17
Parking Brake Switch Inspection....9C-17
Door Switch (Front / Rear Door) Inspection 9C-17
Rear End Door Switch Inspection (Hatchback)....9C-17
Trunk Lid Switch Inspection (Sedan) 9C-18
Outside Air Temperature Sensor Removal and Installation (If Equipped) 9C-18
Outside Air Temperature Sensor Inspection (If Equipped) 9C-18
Instrument Panel Removal and Installation....9C-18
Information Display (Clock) Removal and Installation....9C-20
Audio Unit Removal and Installation (If Equipped)....9C-20
Front Speaker Removal and Installation (If Equipped)....9C-20
Rear Speaker Removal and Installation (If Equipped)....9C-21
GPS Antenna Removal and Installation (If Equipped)....9C-21
Horn Removal and Installation....9C-21
Horn Inspection....9C-21
Horn Relay Inspection....9C-22
Antenna Base Removal and Installation (Hatchback)....9C-22
Remote Audio Control Switch Removal and Installation (If Equipped) 9C-22
Remote Audio Control Switch Inspection (If Equipped)....9C-23
Vehicle Speed Signal Inspection (For Audio Unit) (If Equipped)....9C-23
Specifications....9C-23
Tightening Torque Specifications....9C-23

Wipers / Washers.... 9D-1

Diagnostic Information and Procedures....9D-1
Front Wiper and Washer Symptom Diagnosis 9D-1
Rear Wiper and Washer Symptom Diagnosis....9D-1
Repair Instructions 9D-2
Wipers and Washers Components 9D-2
Washer Tank and Washer Pump Removal and Installation....9D-3
Washer Pump Inspection....9D-3
Windshield Wiper Removal and Installation....9D-3
Windshield Wiper Motor Inspection....9D-4
Rear Wiper Removal and Installation....9D-6
Rear Wiper Motor Inspection 9D-7
Windshield Wiper and Washer Switch Removal and Installation....9D-8
Windshield Wiper and Washer Switch Inspection....9D-8
Rear Wiper and Washer Switch Removal and Installation 9D-10
Rear Wiper and Washer Switch Inspection....9D-10
Rear Wiper Relay Removal and Installation 9D-10
Rear Wiper Relay Inspection 9D-10
Specifications....9D-11
Tightening Torque Specifications....9D-11

Glass / Windows / Mirrors.... 9E-1

Precautions....9E-1
Precautions for Power Window Service (Pinching Prevention Function Model) 9E-1
General Description 9E-1
Rear End Door Window / Back Window Defogger System Description 9E-1
Schematic and Routing Diagram....9E-2
Power Window Circuit Diagram (Pinching Prevention Function Model) 9E-2
Diagnostic Information and Procedures....9E-3
Rear End Door Window / Back Window Defogger Symptom Diagnosis 9E-3
Power Window Control System Symptom Diagnosis 9E-3
Inspection of Pinching Prevention Function (Pinching Prevention Function Model) 9E-4
Power Door Mirror Control System Symptom Diagnosis 9E-4
Door Mirror Heater Symptom Diagnosis (If Equipped)....9E-5
Repair Instructions 9E-5
Windshield Components 9E-5
Windshield Removal and Installation 9E-6
Front Pillar Window Components....9E-10
Front Pillar Window Removal and Installation...9E-10
Rear Quarter Window Components (Hatchback Model)....9E-11

Rear Quarter Window Removal and Installation (Hatchback Model) 9E-11
Rear End Door Window Components (Hatchback Model) 9E-12
Rear End Door Glass Removal and Installation (Hatchback Model) 9E-12
Back Window Components (Sedan Model) 9E-13
Back Window Removal and Installation (Sedan Model) 9E-13
Front Door Window Components 9E-14
Front Door Glass Removal and Installation 9E-15
Front Door Window Regulator Removal and Installation 9E-16
Front Door Window Regulator Inspection 9E-16
Rear Door Window Components 9E-17
Rear Door Glass Removal and Installation 9E-18
Rear Door Window Regulator Removal and Installation 9E-19
Rear Door Window Regulator Inspection 9E-20
Rear End Door Window / Back Window Defogger Switch Inspection 9E-20
Rear End Door Window / Back Window Defogger Relay Inspection 9E-20
Rear End Door Window / Back Window Defogger Wire Inspection 9E-21
Rear End Door Window / Back Window Defogger Wire Repair 9E-22
Power Window Main Switch Inspection 9E-22
Power Window Sub Switch Inspection 9E-24
Pulse Sensor and Its Circuit Inspection (Pinching Prevention Function Model) 9E-25
Power Window Main Switch Initialization (Pinching Prevention Function Model) 9E-26
Door Mirror Components 9E-26
Door Mirror Removal and Installation 9E-27
Power Door Mirror Switch Inspection 9E-27
Power Door Mirror Actuator Inspection 9E-27
Door Mirror Heater Inspection (If Equipped) 9E-27
Door Mirror Heater Switch Inspection (If Equipped) 9E-28
Special Tools and Equipment 9E-28
Recommended Service Material 9E-28

Security and Locks 9F-1

General Description 9F-1
Key Coding Construction 9F-1
Rear End Door Opener System Description 9F-1
Component Location 9F-2
Power Door Lock and Keyless Entry System Component Location 9F-2
Diagnostic Information and Procedures 9F-3
Power Door Lock System Symptom Diagnosis 9F-3
Power Door Lock System Operation Inspection 9F-3
Keyless Entry System Symptom Diagnosis 9F-4
Keyless Entry System Operation Inspection 9F-5
Door Lock Function of Keyless Start System Symptom Diagnosis (If Equipped) 9F-5
Rear End Door Opener System Symptom Diagnosis 9F-5
Rear End Door Opener System Operation Inspection 9F-5
Repair Instructions 9F-6
Front Door Lock Assembly Components 9F-6
Front Door Lock Assembly Removal and Installation 9F-6
Front Door Lock Assembly Inspection 9F-8
Power Door Lock Switch Inspection 9F-8
Door Key Cylinder Switch Inspection 9F-8
Power Door Lock Actuator Inspection 9F-9
Rear Door Lock Assembly Components 9F-10
Rear Door Lock Assembly Removal and Installation 9F-10
Rear Door Lock Assembly Inspection 9F-10
Rear End Door Lock Assembly Components (Hatchback Model) 9F-11
Rear End Door Lock Assembly Removal and Installation (Hatchback Model) 9F-12
Rear End Door Lock Assembly Inspection (Hatchback Model) 9F-12
Rear End Door Opener Switch Inspection (Hatchback Model) 9F-13
Trunk Lid Lock Assembly Components (Sedan Model) 9F-13
Trunk Lid Lock Assembly Removal and Installation (Sedan Model) 9F-14
Trunk Lid Lock Assembly Inspection (Sedan Model) 9F-15
Replacement of Transmitter Battery (Other than Keyless Start Model) 9F-15
Programming Transmitter Code for Keyless Entry System (Other than Keyless Start Model) 9F-15
Keyless Entry Answer Back Function Change-over Procedure 9F-16
Keyless Entry Receiver Removal and Installation 9F-16
Keyless Entry Receiver and Its Circuit Inspection 9F-17
Specifications 9F-18
Tightening Torque Specifications 9F-18
Special Tools and Equipment 9F-18
Recommended Service Material 9F-18

Seats 9G-1

Diagnostic Information and Procedures 9G-1
Front Seat Heater Symptom Diagnosis (If Equipped) 9G-1
Repair Instructions 9G-2
Front Seat Components 9G-2
Front Seat Removal and Installation 9G-3
Front Seat Heater Switch (Driver and Passenger Side) Inspection (If Equipped) 9G-3
Front Seat Heater Wire Inspection (If Equipped) 9G-3
Rear Seat Components 9G-4
Rear Seat Removal and Installation 9G-6

Specifications **9G-6**
Tightening Torque Specifications 9G-6
Special Tools and Equipment **9G-6**
Recommended Service Material 9G-6

Interior Trim 9H-1

Repair Instructions **9H-1**
Floor Carpet Removal and Installation 9H-1
Head Lining Removal and Installation 9H-2
Console Box Components 9H-4
Specifications **9H-4**
Tightening Torque Specifications 9H-4

Hood / Fenders / Doors 9J-1

Repair Instructions **9J-1**
Hood Removal and Installation 9J-1
Hood Inspection and Adjustment 9J-1
Front Fender Components 9J-2
Front Fender Removal and Installation 9J-2
Front Door Assembly Components 9J-3
Front Door Assembly Removal and Installation 9J-3
Rear Door Assembly Components 9J-5
Rear Door Assembly Removal and Installation 9J-5
Rear End Door Assembly Components (Hatchback Model) 9J-6
Rear End Door Assembly Removal and Installation (Hatchback Model) 9J-7
Trunk Lid Components (Sedan Model) 9J-8
Trunk Lid Removal and Installation (Sedan Model) 9J-9
Specifications **9J-11**
Tightening Torque Specifications 9J-11
Special Tools and Equipment **9J-11**
Recommended Service Material 9J-11

Body Structure 9K-1

Repair Instructions **9K-1**
Front Bumper and Rear Bumper Components 9K-1
Radiator Grille Removal and Installation 9K-2
Front Bumper Extension Removal and Installation (if equipped) 9K-3
Rear Bumper Extension Removal and Installation (if equipped) 9K-4
Cowl Top and Front Lower Crossmember Components 9K-5
Specifications **9K-6**
Body Dimensions 9K-6
Panel Clearance 9K-18
Tightening Torque Specifications 9K-19

Paint / Coatings 9L-1

General Description **9L-1**
Anti-Corrosion Treatment Construction 9L-1
Plastic Parts Finishing 9L-1
Component Location **9L-2**
Sealant Application Areas 9L-2
Under Coating Application Areas 9L-10
Anti-Corrosion Compound Application Area 9L-12

Exterior Trim 9M-1

Repair Instructions **9M-1**
Roof Molding Removal and Installation 9M-1
Splash Guard Removal and Installation (If Equipped) 9M-2
Specifications **9M-2**
Tightening Torque Specifications 9M-2

Precautions

Precautions

Precautions on Body, Cab and Accessories

S7RW0A9000001

Air Bag Warning
Refer to “Air Bag Warning in Section 00”.

Fastener Caution
Refer to “Fastener Caution in Section 00”.

Precautions for Body Service
Refer to “Precautions for Body Service”.

Fastener Caution for Body Service:
Refer to “Fastener Caution for Body Service”.

Cautions in Body Electrical System Servicing
Refer to “Cautions in Body Electrical System Servicing in Section 9A”.

Precautions for Discharge Headlight Service (If Equipped)
Refer to “Precautions for Discharge Headlight Service (If Equipped) in Section 9B”.

Precautions for Power Window Service (Pinching Prevention Function Model)
Refer to “Precautions for Power Window Service (Pinching Prevention Function Model) in Section 9E”.

Precautions for Body Service

S7RW0A9000002

⚠ WARNING

For vehicles equipped with a Supplemental Restraint (Air Bag) System:
When servicing vehicle body, if shock may be applied to air bag system component parts, remove those parts beforehand.

Fastener Caution for Body Service

S7RW0A9000003

⚠ CAUTION

- **Fasteners are important attaching parts in that they could affect the performance of vital components and systems, and/or could result in major repair expense. They must be replaced with one of the same part number of with an equivalent part if replacement become necessary.**
- **Do not use a replacement part of lesser quality or substitute a design. Torque values must be used as specified during reassembly to assure proper retention of these parts.**

Wiring Systems

Precautions

Cautions in Body Electrical System Servicing

S7RW0A9100001

When servicing the electric systems, observe the cautions described in “Precautions for Electrical Circuit Service in Section 00” to protect electrical parts and to prevent a fire.

General Description

Abbreviations

S7RW0A9101001

Refer to the “Abbreviations in Section 0A” for the general abbreviations.

Abbreviation	Full term	Abbreviation	Full term
2WD	2 Wheel Drive Vehicles	J/B	Junction block
4WD	4 Wheel Drive Vehicles	J/C	Joint connector
A/B	Air Bag	KLS	Keyless Start System
ACC	Accessory	L	Left
CAN	Controller Area Network	LED	Light Emitting Diode
COMB	Combination	LHD	Left Hand Drive Vehicle
DSL	Diesel engine	LO	Low
ELCM	EVAP leak check module	OCV	Oil Control valve
ESP®	Electronic Stability Program	P/N	Power Normal
FWD	Forward	R	Right
HI	High	RHD	Right Hand Drive Vehicle
IF EQPD	If equipped	ST	Starter
IG COIL	Ignition coil	TPMS	Tire Pressure Monitoring System
ILL	Illumination	VIM	Valiable Intake Manifold
IND	Indicator	VSV	Vacuum switching valve
INT	Intermittent	5 dr	5 door

ESP® is a registered trademark of Daimler Chrysler AG.

Wire / Connector Color Symbols

S7RW0A9101002

Refer to “Wire Color Symbols in Section 0A”.

Symbols and Marks

S7RW0A9101003

Battery	Ground		Normal fuse	Slow blow fuse
I2RH01910910-01	IYSQ01910915-01	IYSQ01910916-01	IYSQ01910917-01	IYSQ01910918-01
Circuit breaker	**Coil, Solenoid**	**Heater**	**Bulb**	
IYSQ01910919-01	IYSQ01910920-01	IYSQ01910921-01	IYSQ01910922-01	IYSQ01910923-01
Cigarette lighter	**Motor**	**Pump**	**Horn**	**Speaker**
IYSQ01910924-01	IYSQ01910925-01	IYSQ01910926-01	I2RH01910911-01	I5JB0B910995-02
Buzzer	**Chime**	**Condenser**	**Thermistor**	**Reed switch**
IYSQ01910929-01	IYSQ01910930-01	IYSQ01910931-01	IYSQ01910932-01	IYSQ01910933-01
Resistance	**Variable resistance**		**Transistor**	
IYSQ01910934-01	IYSQ01910935-01	IYSQ01910936-01	IYSQ01910937-01 NPN	IYSQ01910938-01 PNP
Photo transistor	**Diode**	**Zener diode**	**Light emitting diode**	**Photo diode**
IYSQ01910939-01	IYSQ01910940-01	IYSQ01910941-01	IYSQ01910942-01	IYSQ01910943-01
Piezoelectric element	**Harness**		**Ring terminal**	**Connector**
IYSQ01910944-01	IYSQ01910945-01 Connected	IYSQ01910946-01 Not connected	IYSQ01910947-01	IYSQ01910948-01
Relay		**Switch**		
I5RW0A910982-01 Normal open	I5RW0A910983-01 Normal closed	I5RW0A910984-01 Open switch	I5RW0A910985-01 Closed switch	

Ignition switch	Keyless entry	Immobilizer system	Combination meter	Lighting switch
I2RH01910912-01	I3JA01910902-01	I5RH01910901-01	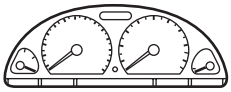 I2RH01910915-01	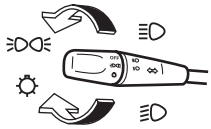 I2RH01910916-01
Headlight leveling	**Hazard warning light**	**Front fog light**	**Rear fog light**	**Spark plug**
I3JA01910904-01	I3JA01910905-01	I3JA01910906-01	I3JA01910907-01	I2RH01910921-01
Radiator fan	**Fuel pump**	**Fuel injector**	**XX control module**	**Windshield wiper**
I2RH01910922-01	I3JA01910908-01	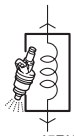 I5RW0A910987-01	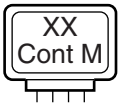 I2RH01910925-01	I3JA01910909-01
Windshield washer	**Rear wiper**	**Rear washer**	**Rear defogger**	**Power window**
I3JA01910910-01	I3JA01910911-01	I3JA01910912-01	I2RH01910930-01	I3JA01910913-01
Power door lock	**Power mirror**	**A/B**	**Pretensioner**	**Passenger side**
I3JA01910914-01	I3JA01910915-01	I3JA01910916-01	I3JA01910917-01	I3JA01910918-01
Driver side	**Seat heater**	**A/C**	**Power steering**	**Side air-bag (R)**
I3JA01910919-01	I2RH01910938-01	I3JA01910920-01	I3JA01910921-01	I4JA01910901-01
Side air-bag (L)	**Side curtain air-bag (R)**	**Side curtain air bag (L)**	**Glow plug**	
I4JA01910902-01	I5RS0A910958-01	I5RS0A910959-01	I5RW0A910986-01	

How to Read Connector Layout Diagram

S7RW0A9101004

[A-1]: Harness symbol and corresponding harness name
A: Battery harness
B: A/C harness
C: Engine harness
D: Injector harness
E: Main harness, Oil pressure switch wire, Console wire
G: Instrument panel harness
J: Side door wire (Power window)
K: Interior light harness, Rear speaker wire, Roof wire
L: Floor harness, G sensor wire (Fuel pump harness)
M: Rear bumper harness
O: Rear end door harness
Q: Air bag/Pretensioner harness
R: (Fuel pump wire)
[A-2]: Connector Number
[B]: Ground point No.

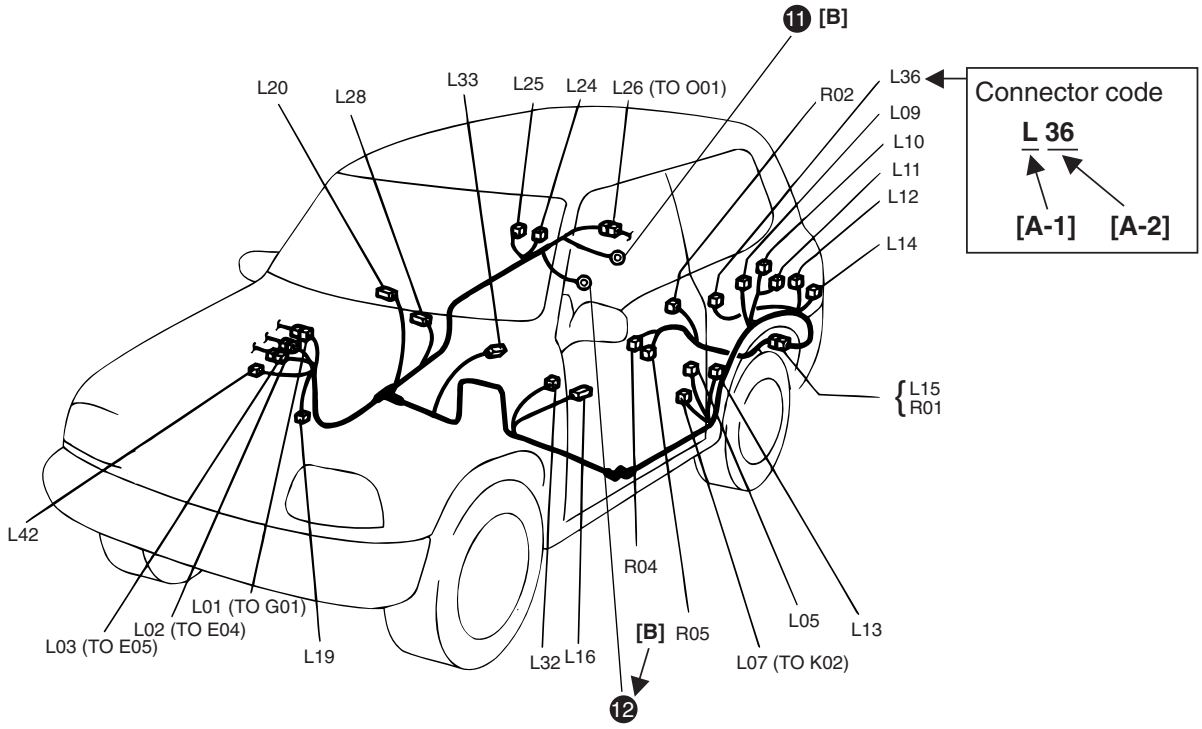

I2RH01910901-01

How to Read Connector Codes and Terminal Nos.

S7RW0A9101005

1) Connector code/Terminal No./Terminal layout

- The connector shape and terminal layout shown in this manual are those when viewed from “Z” in the illustration.
  Refer to “List of Connectors”.

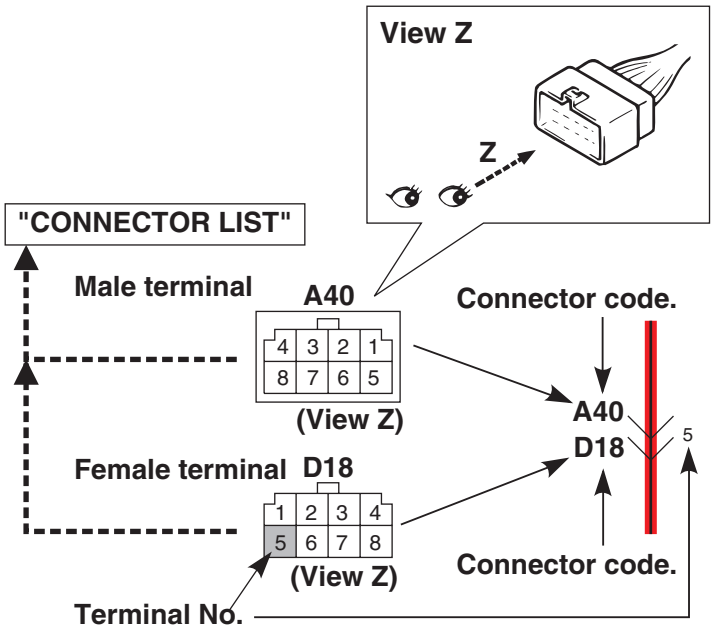

I5RW0A910988-02

NOTE

Molded terminal numbers that are different from the above can be found on some connectors in rare cases.
These molded numbers are not applied in this manual.

2) Connector type

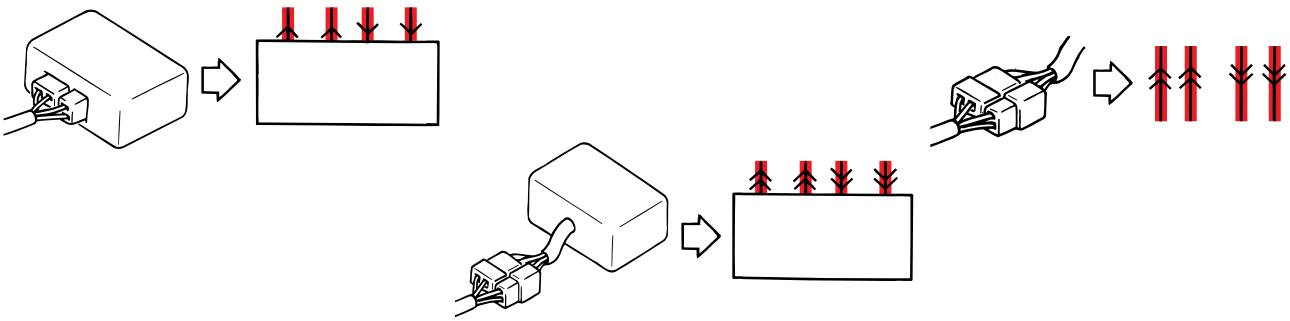

I2RH01910903-01

3) Terminals in one connector (Broken line) (B15)/Terminals in different connectors (B14, B16)

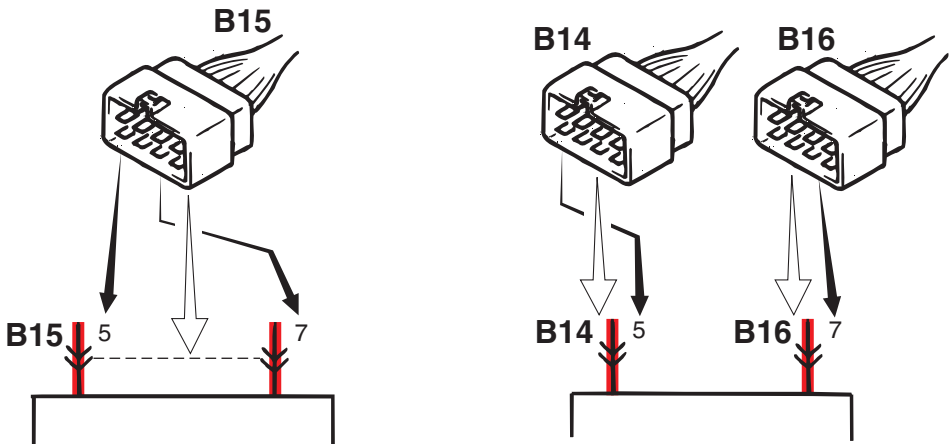

I5RW0A910995-03

4) Joint connector (J/C)

- Several different wires with the same wire color are joined at a part of J/C.

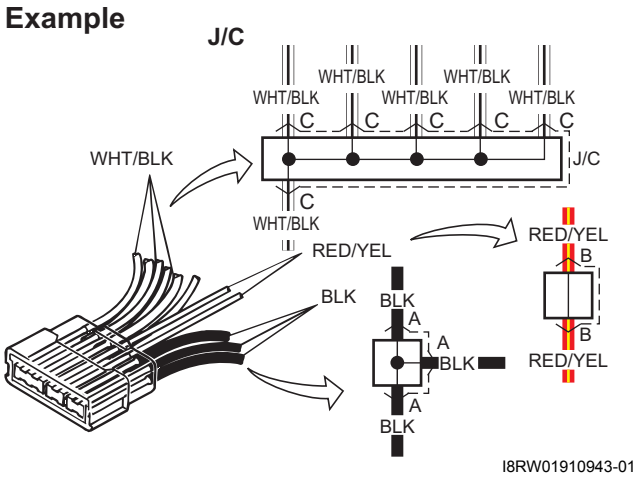

I8RW01910943-01

5) Weld splice (W/S)

- Several different wires with the same wire color are joined by welding at a W/S.

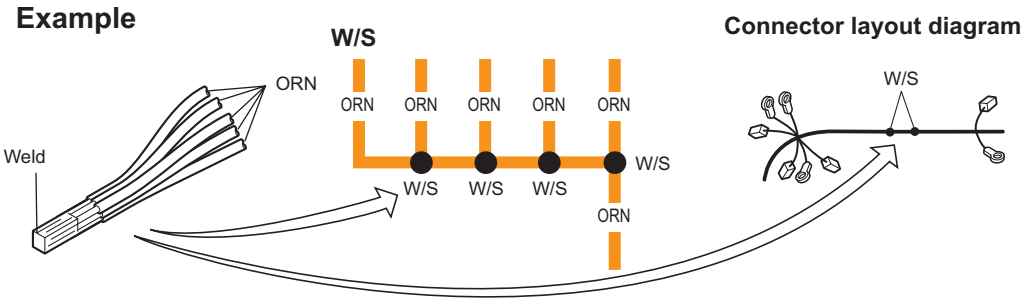

I7RW0A910A03-02

6) Junction block (J/B)

Example

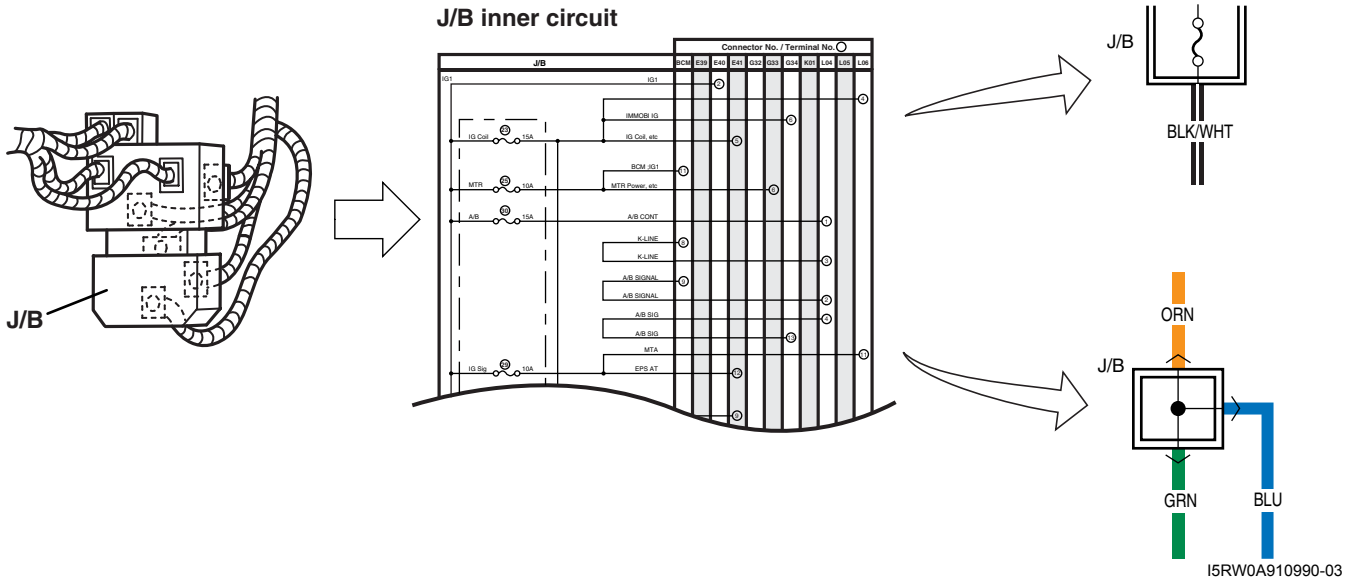

7) Connector location, shape and terminal No.
Refer to “Connector Layout Diagram”.
Refer to “System Circuit Diagram”.
Refer to “List of Connectors”.

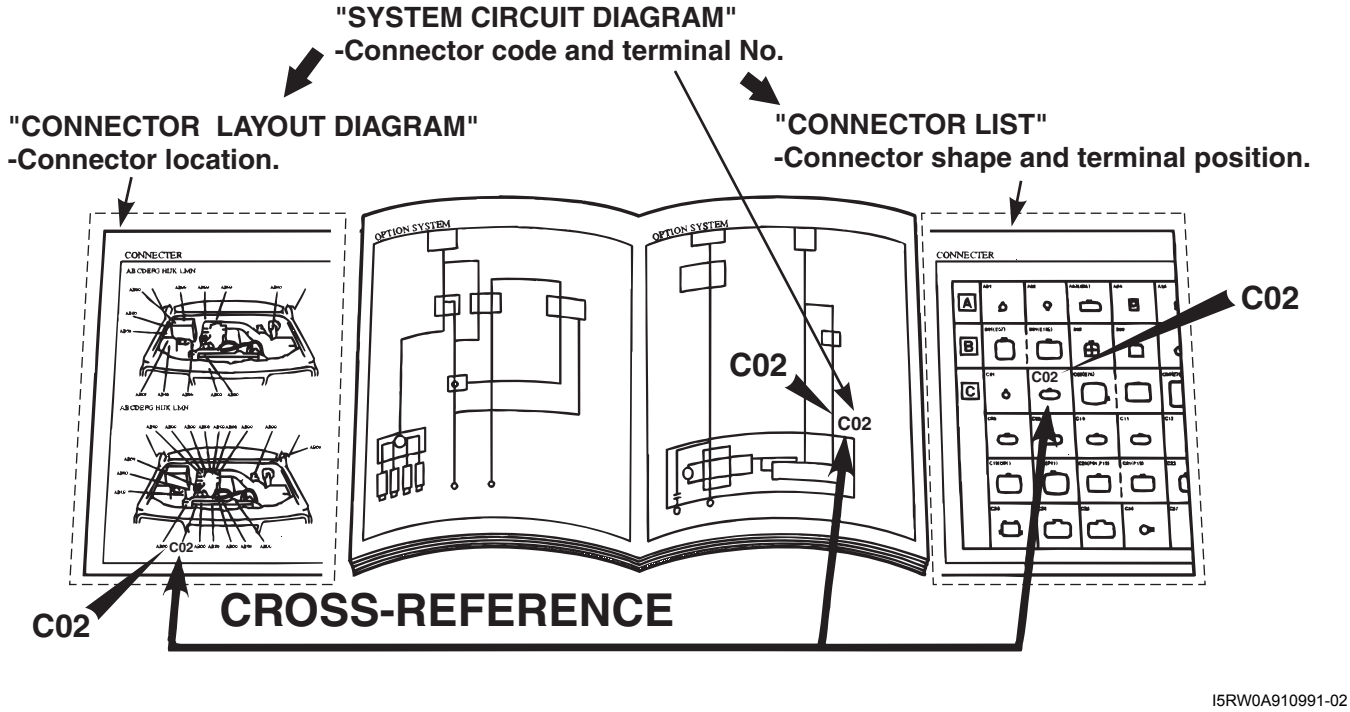

How to Read Ground Point

S7RW0A9101006

Refer to “System Circuit Diagram”.
Refer to “Ground (earth) Point”.

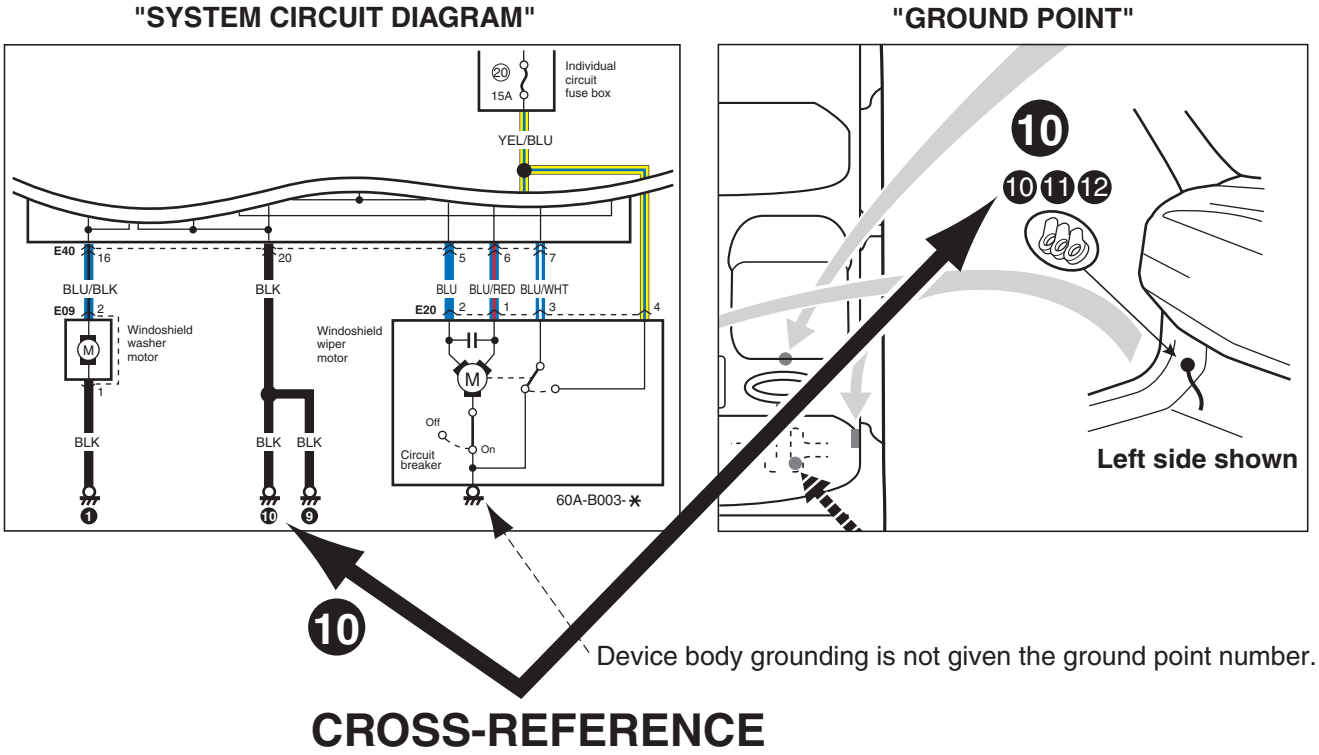

I5RW0A910992-02

How to Read Power Supply Diagram

S7RW0A9101007

Refer to “Power Supply Diagram”.
Refer to “System Circuit Diagram”.

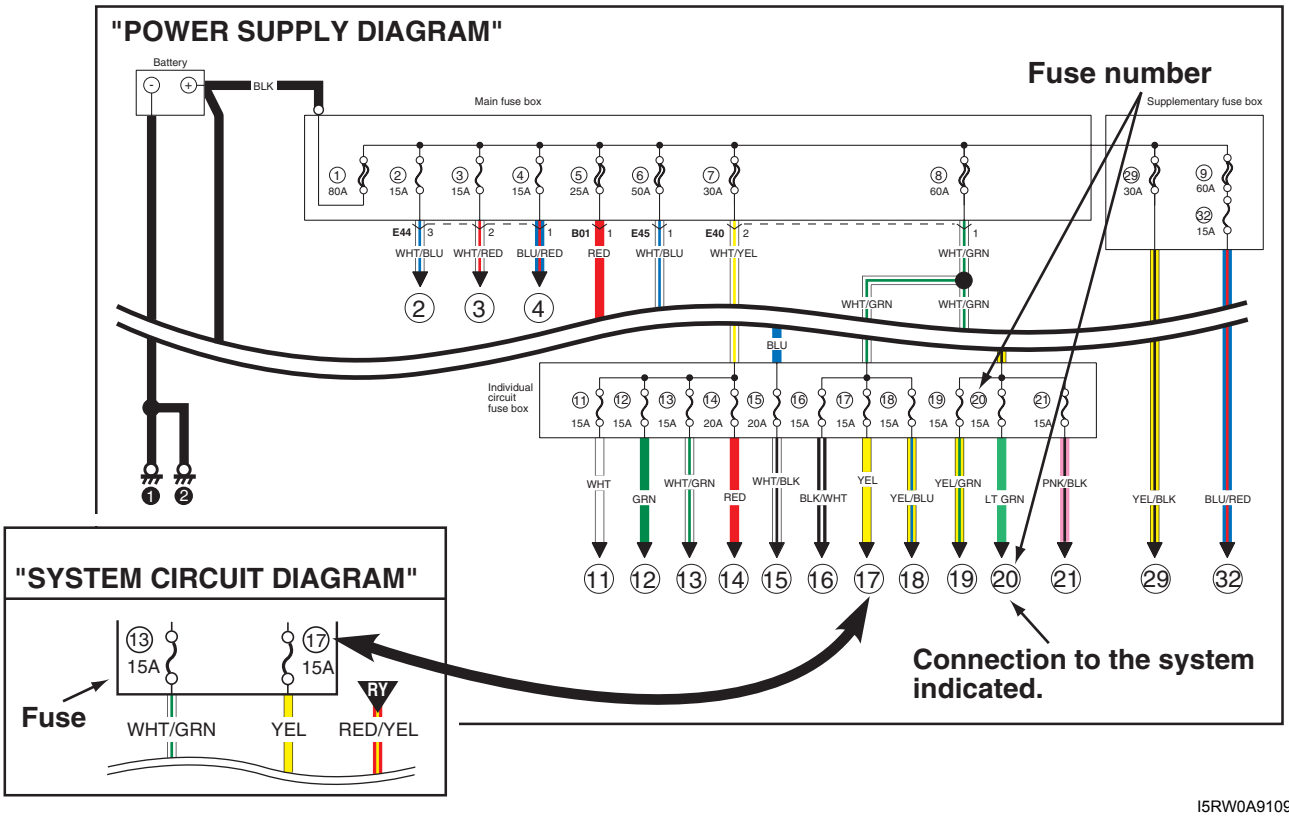

I5RW0A910993-02

How to Read System Circuit Diagram

S7RW0A9101008

The circuit diagram is designed so the current flows from the top of the diagram (power source) to the bottom of the diagram (ground) as if giving an image of water flow.

[A]: Fuse No.

[B]: Circuit jumping page / direction

NOTE

This means “Jump to the page directed with the arrow(s) by their number.
(For example:” Two arrows directing left” means” Jump to two pages before”.)
You will find the same symbol with the arrows directing opposite in the referenced page. The circuit continues between the symbols.

[C]: Circuit jumping point / direction

NOTE

The circuit continues to the same symbol with opposite direction within the page.
You will find the other symbol in the direction of the arrow.

[D]: Terminals-in-one-connector mark
[E]: Wire color
[F]: Shield wire
[G]: Ground point
[H]: “From” or “To” (With ID letter (s))
[I]: Specification variation
The white arrow between A and B means “or”.
[J]: “From” (With ID letter (s))
[K] “To” (With ID letter (s))
[L]: Connector code
[M]: Terminal No.
[N]: Symbol mark
[O]: “SEE” mark

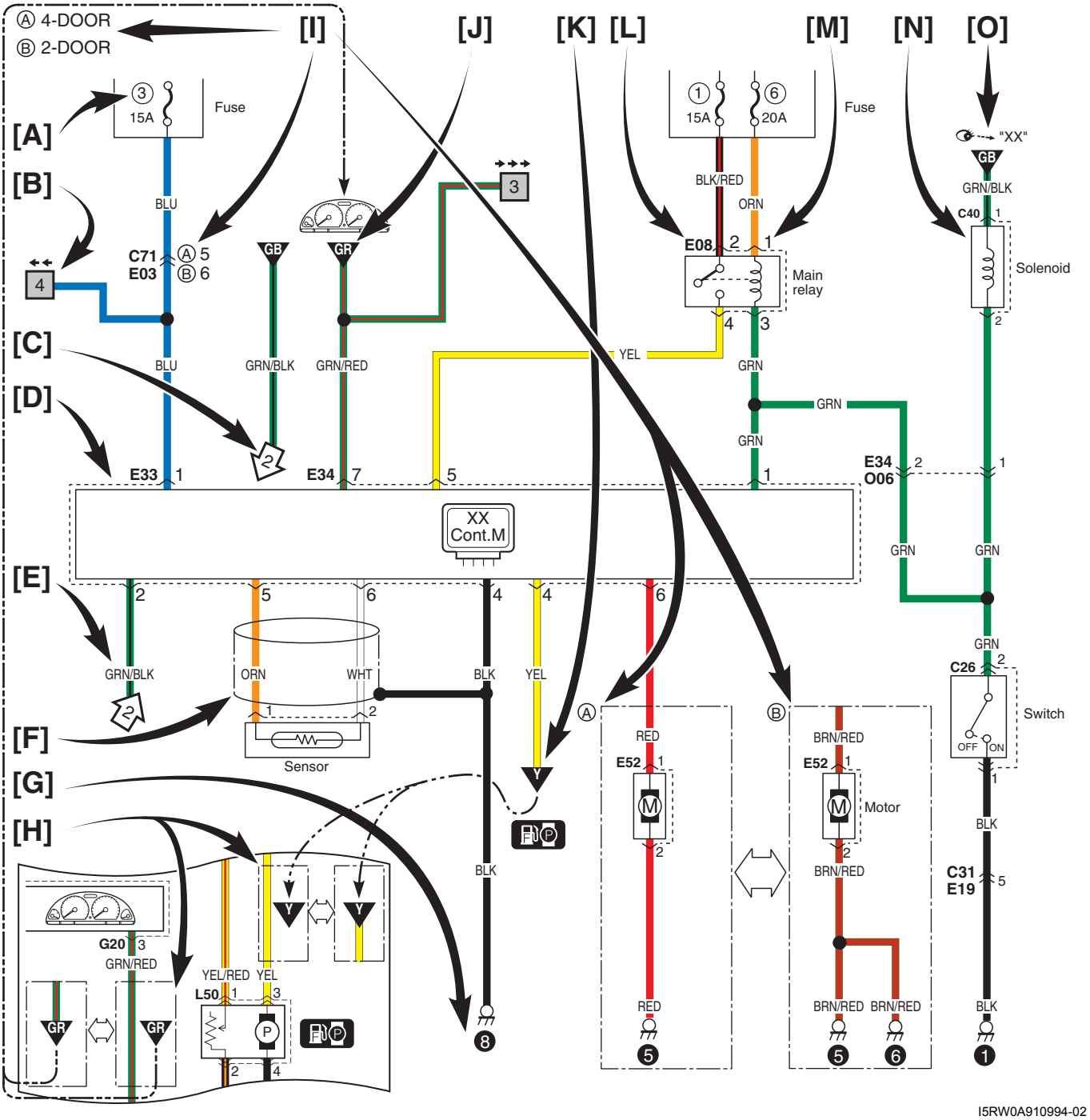

I5RW0A910994-02

Connector Layout Diagram

Connector Layout Diagram

S7RW0A910A001

Refer to “Engine Compartment”.
Refer to “Instrument Panel”.
Refer to “Door, Roof”.
Refer to “Floor”.
Refer to “Rear”.
ESP® is a registered trademark of Daimler Chrysler AG.

Engine Compartment

S7RW0A910A002

A: Battery cable / C: Engine harness (M15A engine RHD)

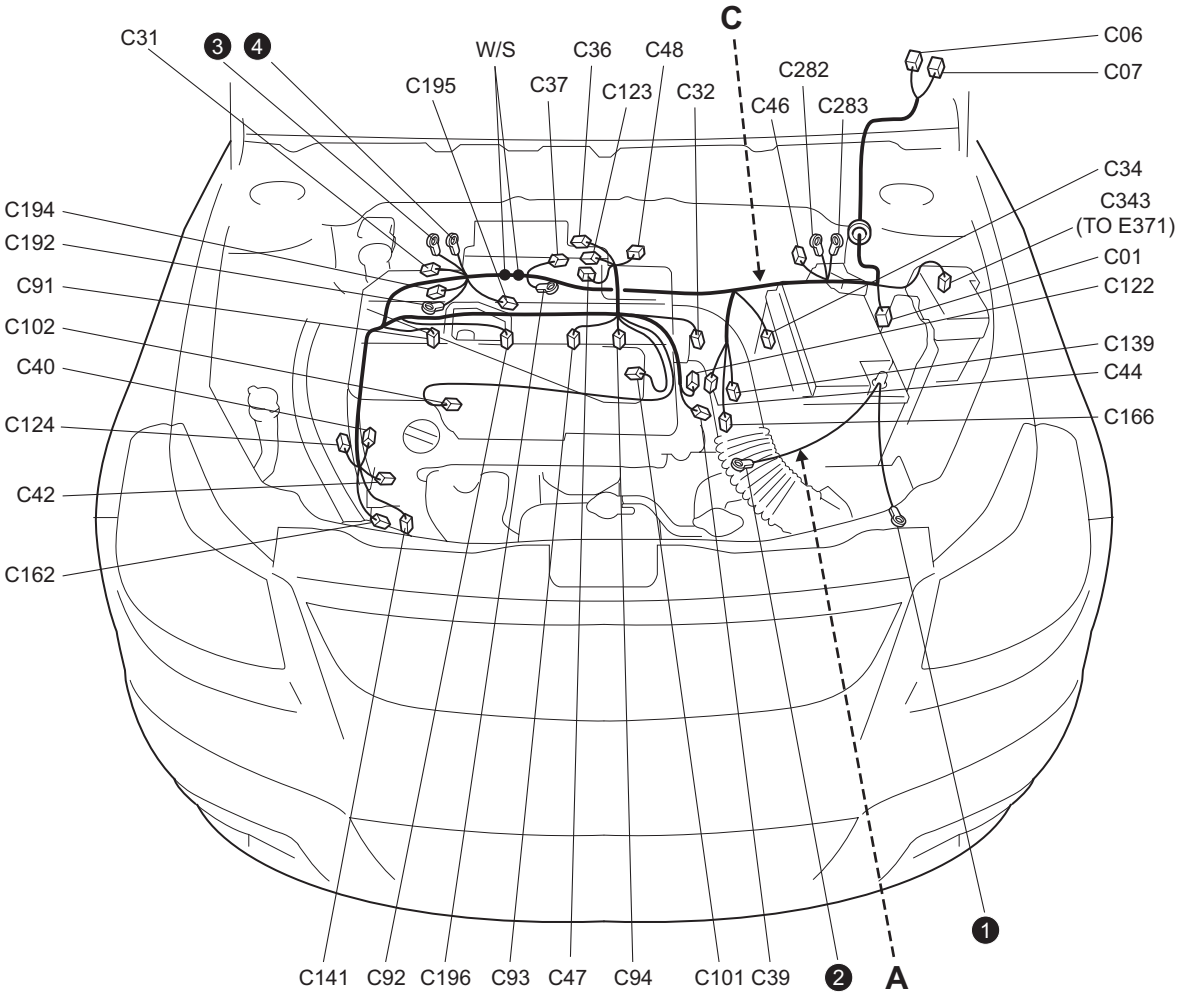

I7RW0A910A00-03

C: Engine harness

No.	Color	Connective position	Remarks
C01	GRY	ECM	
C06	N	TCM	A/T
C07	N	TCM	A/T
C31	GRY	CKP sensor	
C32	BLK	CMP sensor	
C34	GRY	VSS	A/T
C36	BLK	MAP sensor	
C37	GRY	Knock sensor	
C39	BLK	ECT sensor	
C40	BLK	A/F sensor	
C42	GRN	Heated oxygen sensor	
C44	BLU	Input shaft speed sensor	A/T
C46	GRY	Current sensor	
C47	BLK	MAF sensor	
C48	BLK	Electric throttle body	
C91	GRY	Fuel injector #1	
C92	GRY	Fuel injector #2	
C93	GRY	Fuel injector #3	
C94	GRY	Fuel injector #4	
C101	GRY	IG COIL #1	
C102	GRY	IG COIL #2	
C122	GRY	EGR valve	
C123	BLK	EVAP canister purge valve	
C124	BLU	OCV	
C139	GRY	Shift solenoid	A/T
C141	BLK	A/C compressor	
C162	N	Oil pressure switch	
C166	GRY	Transaxle range sensor	A/T
C192	—	Generator	
C194	BLK	Generator	
C195	BLK	Starting motor	
C196	—	Starting motor	
C282	—	Main fuse box	
C283	—	Main fuse box	
C343	N	Main harness (To E371)	

A: Battery cable / C: Engine harness (M16A engine RHD)

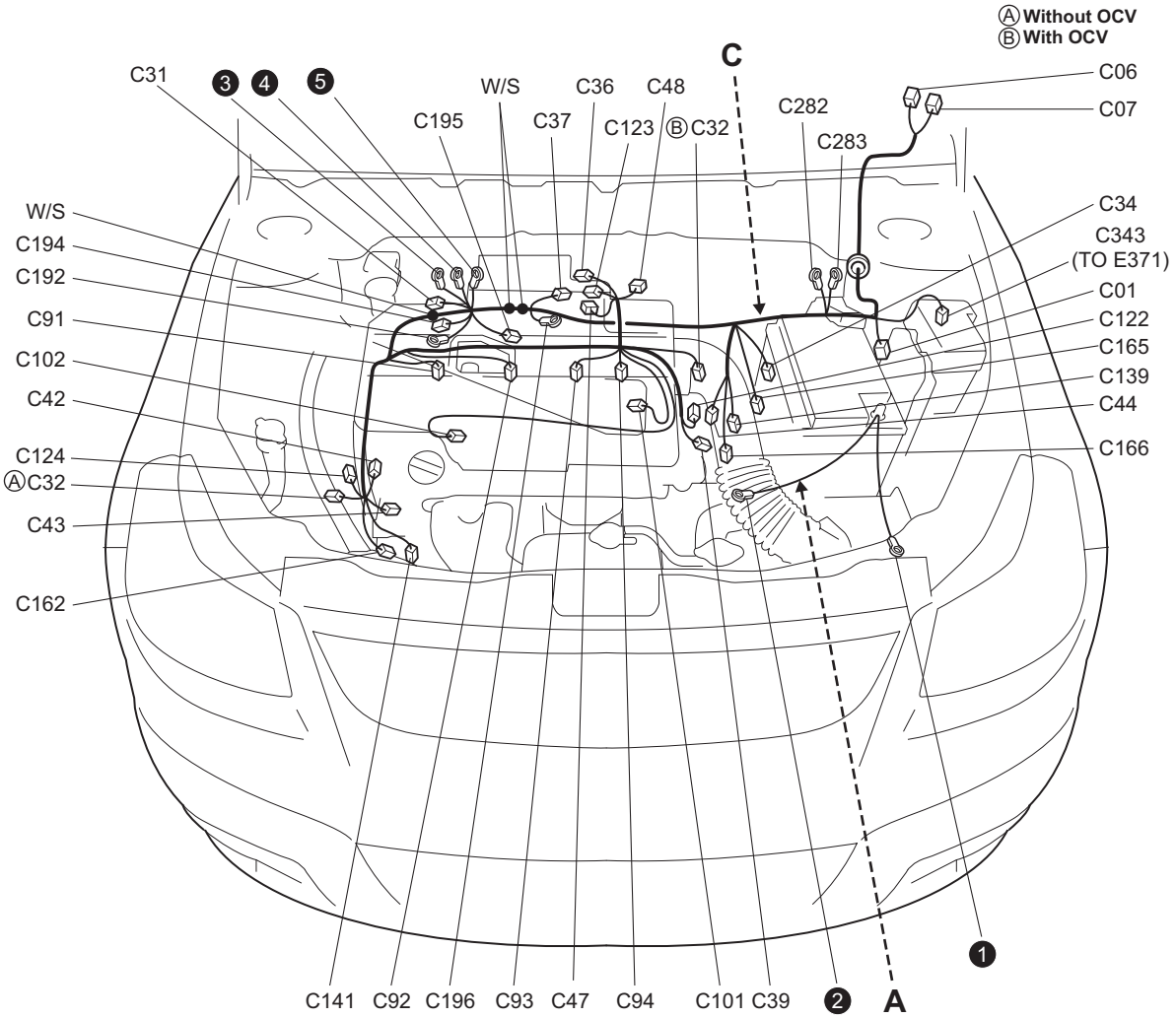

I7RW0A910958-02

C: Engine harness

No.	Color	Connective position	Remarks
C01	GRY	ECM	
C06	N	TCM	A/T
C07	N	TCM	A/T
C31	GRY	CKP sensor	
C32	BLK or GRY	CMP sensor	
C34	GRY	VSS	A/T
C36	BLK	MAP sensor	
C37	GRY	Knock sensor	
C39	BLK	ECT sensor	
C42	BLK	Heated oxygen sensor #1	
C43	GRN	Heated oxygen sensor #2	
C44	BLU	Input shaft speed sensor	A/T
C47	BLK	MAF sensor	
C48	BLK	Electric throttle body	
C91	GRY	Fuel injector #1	
C92	GRY	Fuel injector #2	
C93	GRY	Fuel injector #3	
C94	GRY	Fuel injector #4	
C101	GRY	IG COIL #1	
C102	GRY	IG COIL #2	
C122	GRY	EGR valve	
C123	BLK	EVAP canister purge valve	

No.	Color	Connective position	Remarks
C124	BLU	OCV	IF EQPD
C139	GRY	Shift solenoid	A/T
C141	BLK	A/C compressor	
C162	—	Oil pressure switch	
C165	BLK	Back-up light switch	M/T
C166	GRY	Transaxle range sensor	A/T
C192	—	Generator	
C194	BLK	Generator	
C195	BLK	Starting motor	
C196	—	Starting motor	
C282	—	Main fuse box	
C283	—	Main fuse box	
C343	N	Main harness (To E371)	

A: Battery cable / C: Engine harness (M16A engine LHD)

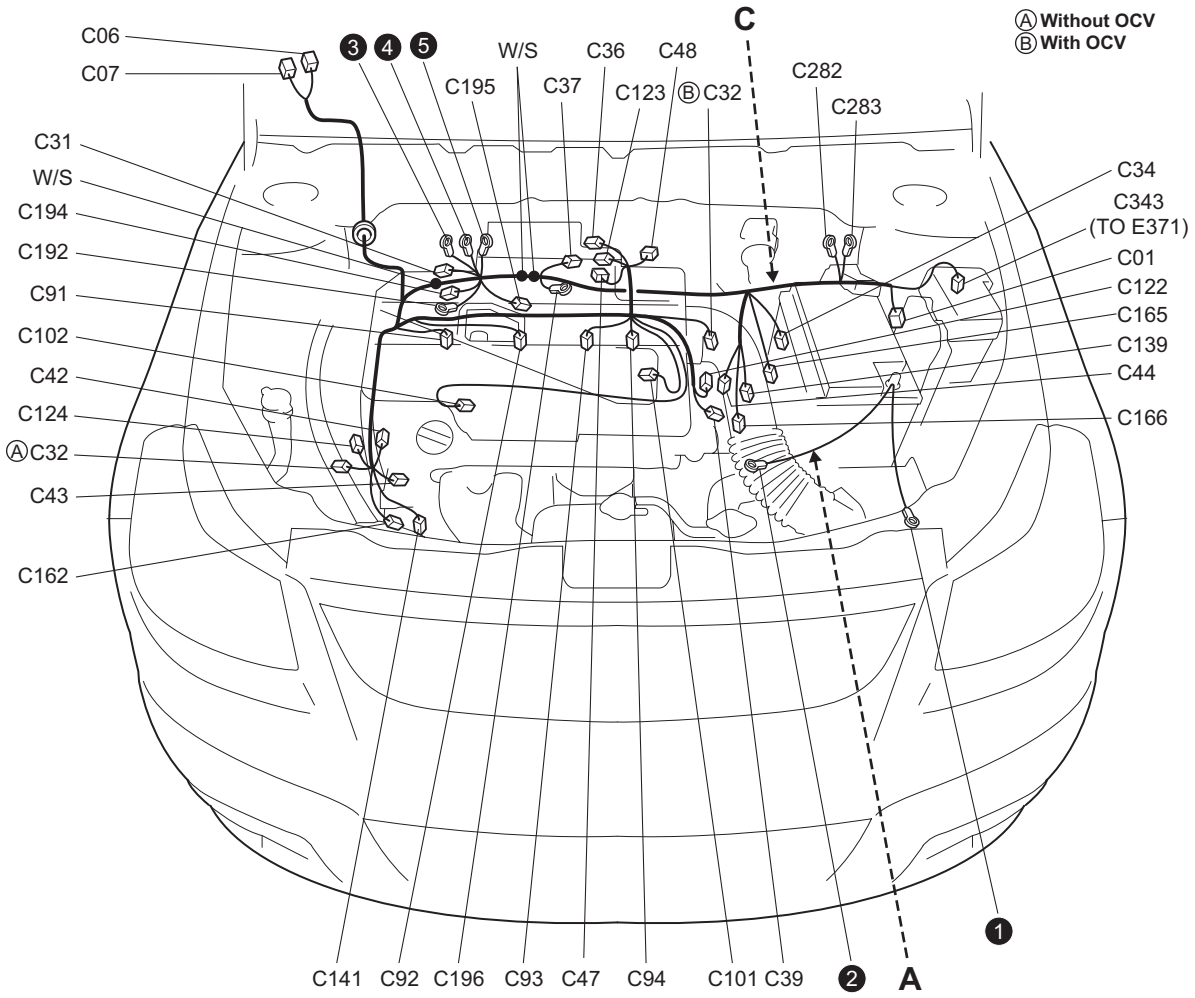

I7RW0A910959-02

C: Engine harness

No.	Color	Connective position	Remarks
C01	GRY	ECM	
C06	N	TCM	A/T
C07	N	TCM	A/T
C31	GRY	CKP sensor	
C32	BLK or GRY	CMP sensor	
C34	GRY	VSS	A/T
C36	BLK	MAP sensor	
C37	GRY	Knock sensor	
C39	BLK	ECT sensor	
C42	BLK	Heated oxygen sensor #1	
C43	GRN	Heated oxygen sensor #2	
C44	BLU	Input shaft speed sensor	A/T
C47	BLK	MAF sensor	
C48	BLK	Electric throttle body	
C91	GRY	Fuel injector #1	
C92	GRY	Fuel injector #2	
C93	GRY	Fuel injector #3	
C94	GRY	Fuel injector #4	
C101	GRY	IG COIL #1	
C102	GRY	IG COIL #2	
C122	GRY	EGR valve	
C123	BLK	EVAP canister purge valve	
C124	BLU	OCV	IF EQPD
C139	GRY	Shift solenoid	A/T
C141	BLK	A/C compressor	
C162	—	Oil pressure switch	
C165	BLK	Back-up light switch	M/T
C166	GRY	Transaxle range sensor	A/T
C192	—	Generator	
C194	BLK	Generator	
C195	BLK	Starting motor	
C196	—	Starting motor	
C282	—	Main fuse box	
C283	—	Main fuse box	
C343	N	Main harness (To E371)	

A: Battery cable / C: Engine harness (J20A engine RHD)

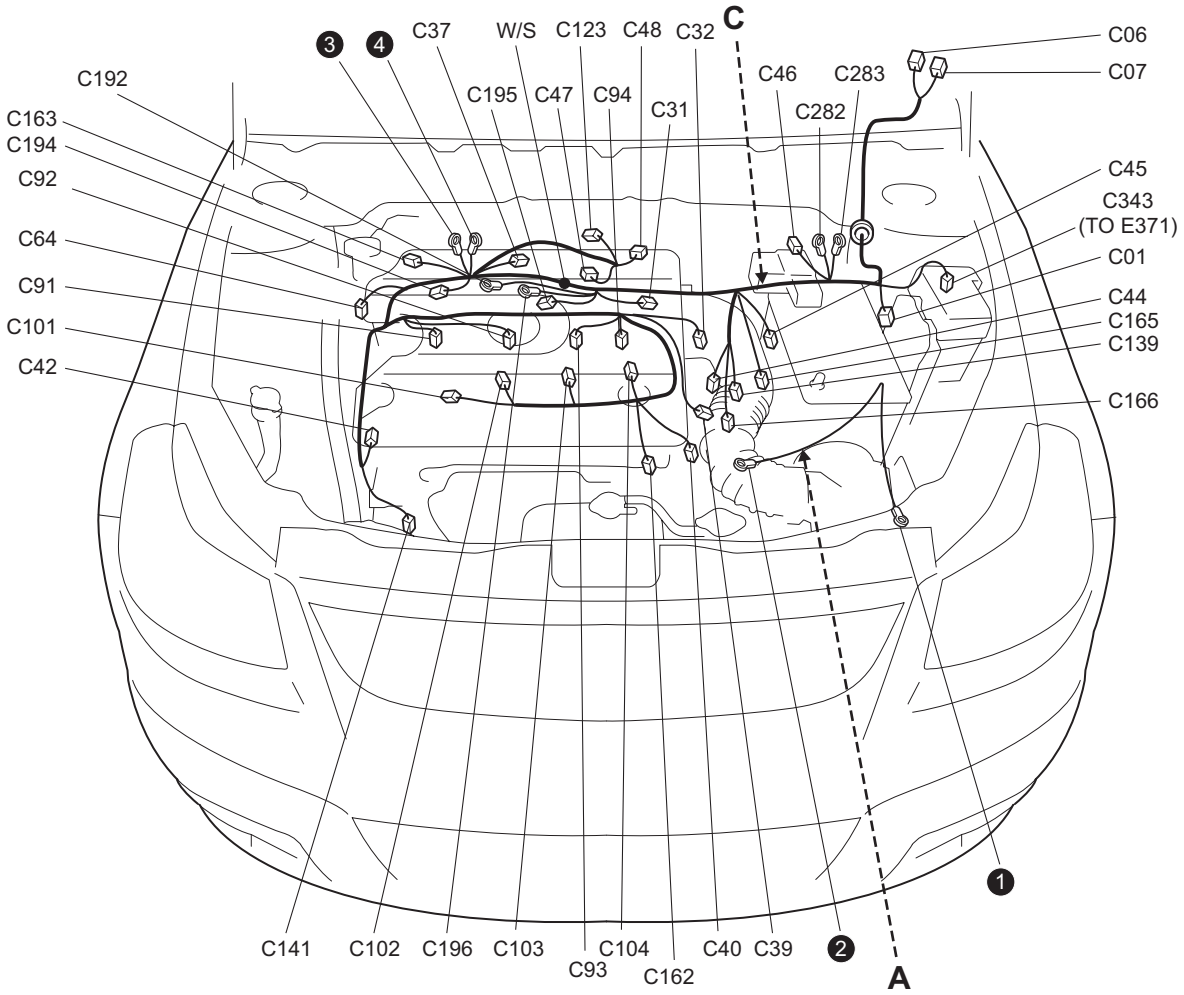

I7RW0A910960-02

C: Engine harness

No.	Color	Connective position	Remarks
C01	GRY	ECM	
C06	N	TCM	A/T
C07	N	TCM	A/T
C31	GRY	CKP sensor	
C32	N	CMP sensor	
C37	GRY	Knock sensor	
C39	BLK	ECT sensor	
C40	GRN	A/F sensor	
C42	GRY	Heated oxygen sensor	
C44	BLK	Input shaft speed sensor	A/T
C45	BLK	Output shaft speed sensor	A/T
C46	GRY	Current sensor	
C47	BLK	MAF sensor	
C48	BLK	Electric throttle body	
C64	BRN	VIM motor	
C91	GRY	Fuel injector #1	
C92	GRY	Fuel injector #2	
C93	GRY	Fuel injector #3	
C94	GRY	Fuel injector #4	
C101	GRY	IG COIL #1	
C102	GRY	IG COIL #2	
C103	GRY	IG COIL #3	
C104	GRY	IG COIL #4	

No.	Color	Connective position	Remarks
C123	BLU	EVAP canister purge valve	
C139	GRY	Shift solenoid	A/T
C141	BLK	A/C compressor	
C162	N	Oil pressure switch	
C163	N	P/S pressure switch	IF EQPD
C165	BLK	Back-up light switch	M/T
C166	BLK	Transaxle range sensor	A/T
C192	—	Generator	
C194	BLK	Generator	
C195	BLK	Starting motor	
C196	—	Starting motor	
C282	—	Main fuse box	
C283	—	Main fuse box	
C343	N	Main harness (To E371)	

A: Battery cable / C: Engine harness (J20A engine LHD)

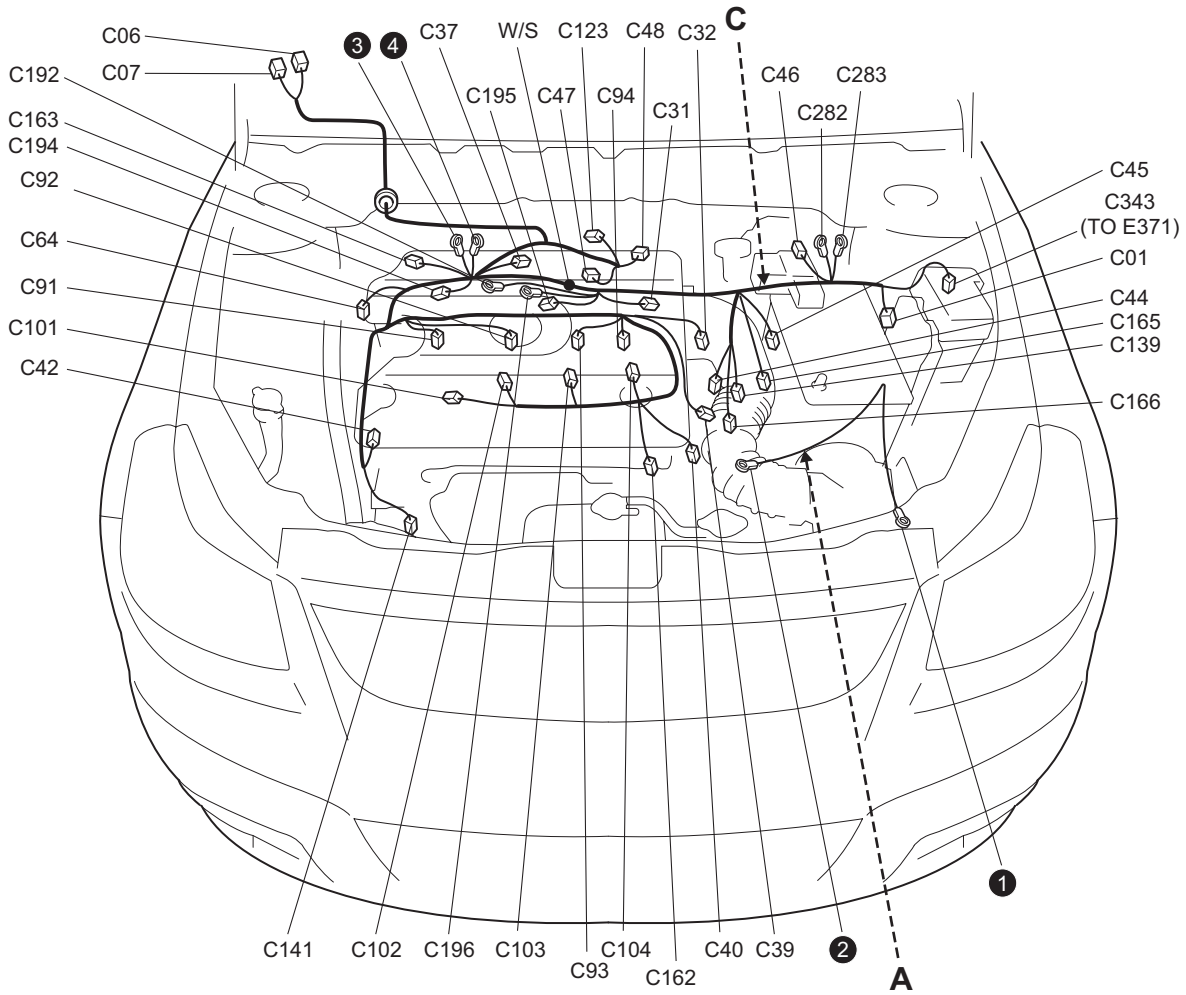

I7RW0A910961-02

C: Engine harness

No.	Color	Connective position	Remarks
C01	GRY	ECM	
C06	N	TCM	A/T
C07	N	TCM	A/T
C31	GRY	CKP sensor	
C32	N	CMP sensor	
C37	GRY	Knock sensor	
C39	BLK	ECT sensor	
C40	GRN	A/F sensor	
C42	GRY	Heated oxygen sensor	
C44	BLK	Input shaft speed sensor	A/T
C45	BLK	Output shaft speed sensor	A/T
C46	GRY	Current sensor	
C47	BLK	MAF sensor	
C48	BLK	Electric throttle body	
C64	BRN	VIM motor	
C91	GRY	Fuel injector #1	
C92	GRY	Fuel injector #2	
C93	GRY	Fuel injector #3	
C94	GRY	Fuel injector #4	
C101	GRY	IG COIL #1	
C102	GRY	IG COIL #2	
C103	GRY	IG COIL #3	
C104	GRY	IG COIL #4	
C123	BLU	EVAP canister purge valve	
C139	GRY	Shift solenoid	A/T
C141	BLK	A/C compressor	
C162	N	Oil pressure switch	
C163	N	P/S pressure switch	IF EQPD
C165	BLK	Back-up light switch	M/T
C166	BLK	Transaxle range sensor	A/T
C192	—	Generator	
C194	BLK	Generator	
C195	BLK	Starting motor	
C196	—	Starting motor	
C282	—	Main fuse box	
C283	—	Main fuse box	
C343	N	Main harness (To E371)	

E: Main harness (RHD)

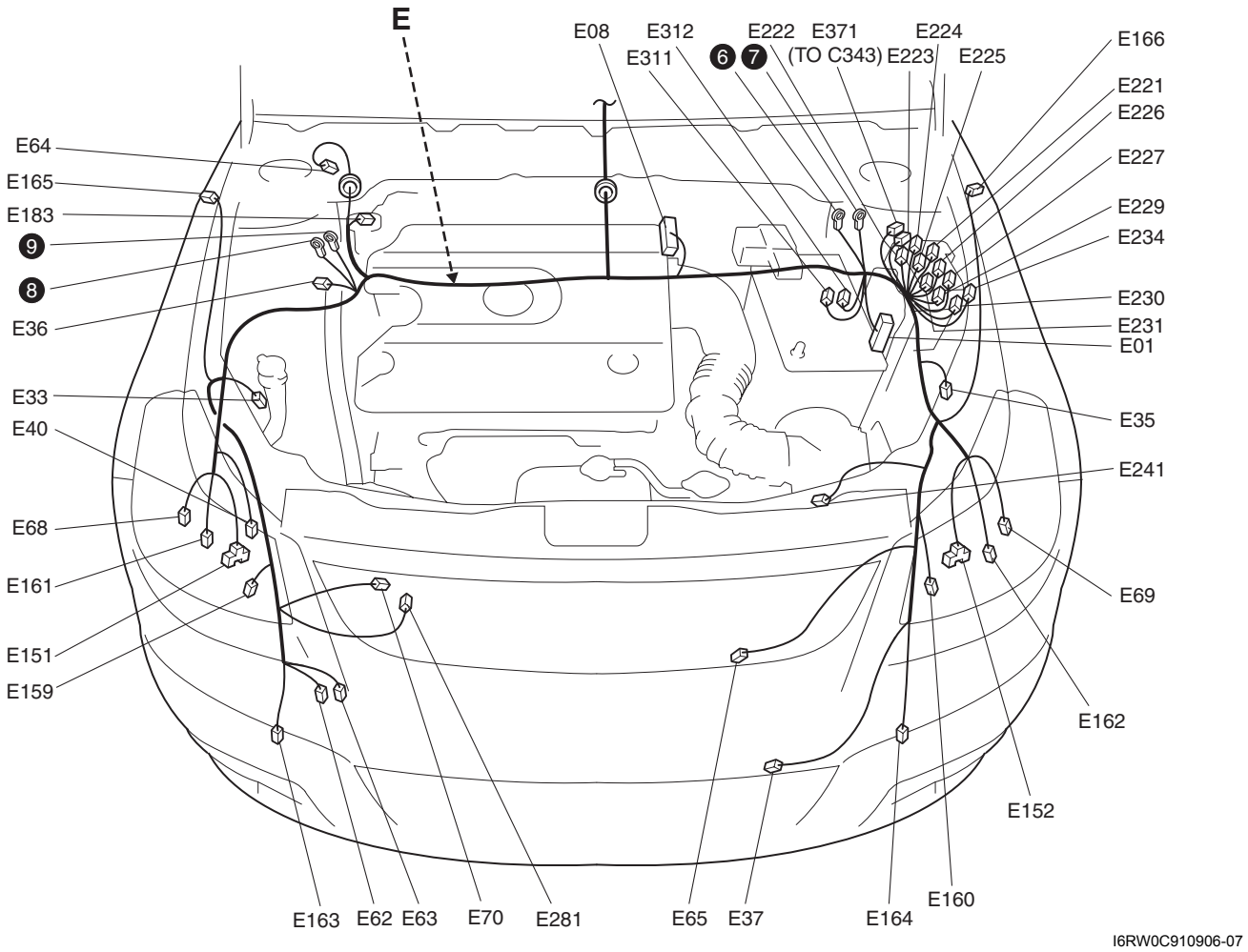

I6RW0C910906-07

E: Main harness

No.	Color	Connective position	Remarks
E01	GRY	ECM	
E08	BLK	ABS control module	
E33	N	Wheel speed sensor (FR)	
E35	BLU	Wheel speed sensor (FL)	
E36	BLK	A/C refrigerant pressure sensor	
E37	BLK	Outside air temperature sensor	
E40	YEL	Forward sensor	
E62	BLU	Windshield washer motor	
E63	GRN	Rear washer motor	
E64	GRY	Windshield wiper motor	
E65	BLK	Radiator fan motor	
E68	GRY	Headlight beam leveling actuator (R)	IF EQPD
E69	GRY	Headlight beam leveling actuator (L)	IF EQPD
E70	BLK	Condenser fan motor	
E151	BLK	Headlight (R)	
E152	BLK	Headlight (L)	
E159	GRY	Front turn signal light (R)	
E160	GRY	Front turn signal light (L)	
E161	N	Front position light (R)	
E162	N	Front position light (L)	
E163	BLK	Front fog light (R)	
E164	BLK	Front fog light (L)	
E165	N	Side turn signal light (R)	
E166	N	Side turn signal light (L)	

No.	Color	Connective position	Remarks
E183	GRY	Brake fluid level switch	
E221	BLK	Main relay	
E222	BLK	Radiator fan relay #1	
E223	BLK	Radiator fan relay #2	
E224	BLK	Radiator fan relay #3	
E225	BLK	Starting motor relay	
E226	BLK	Throttle actuator control relay	
E227	BLK	Fuel pump relay	
E229	BLK	A/C compressor relay	
E230	BLK	Condenser fan relay	
E231	BLK	A/T relay	A/T
E234	BLK	Front fog light relay	
E241	BLK	Shift lock relay	A/T
E281	BLK	Horn	
E311	BLK	Main fuse box	
E312	N	Main fuse box	
E371	N	Engine harness (To C343)	

E: Main harness (LHD)

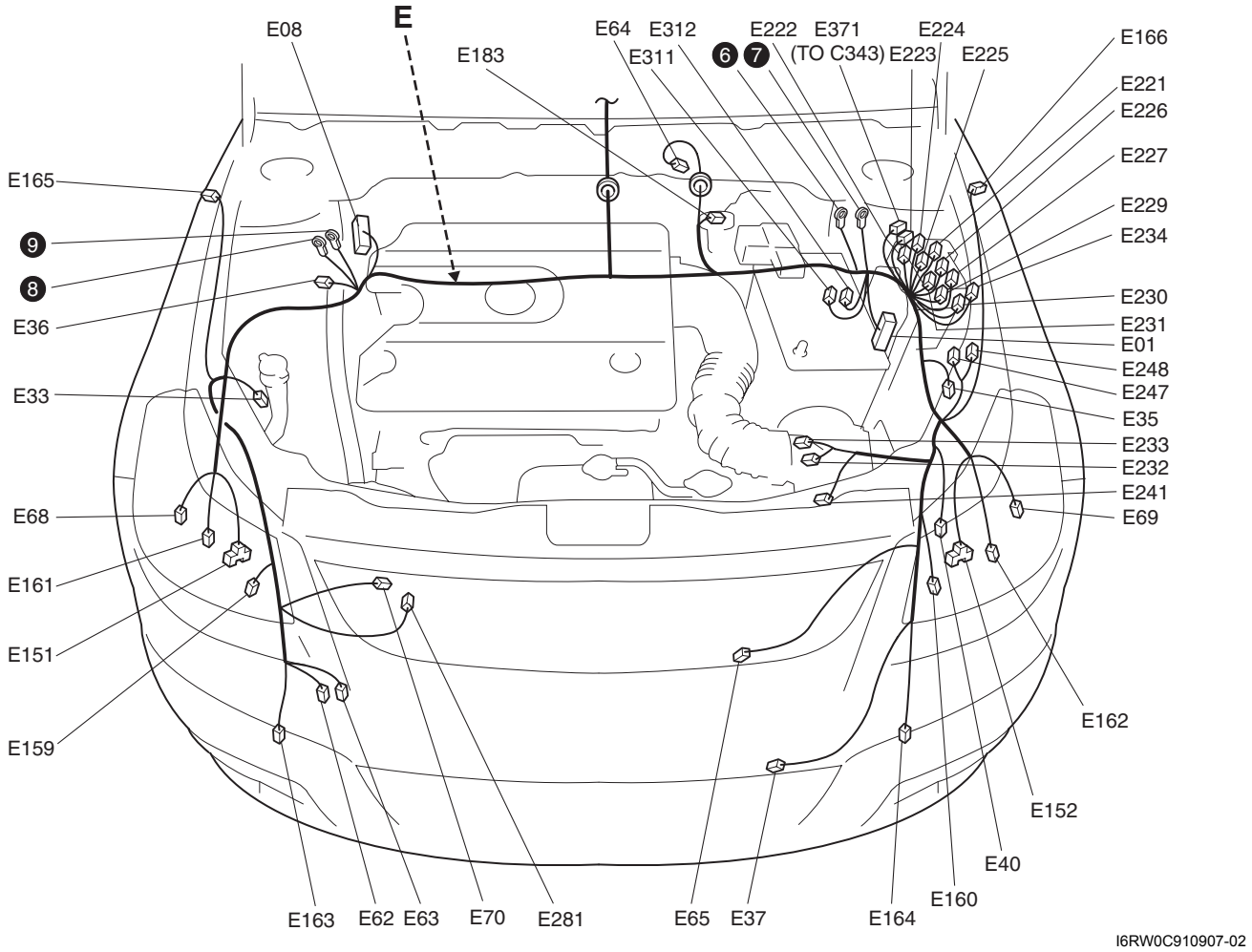

E: Main harness

No.	Color	Connective position	Remarks
E01	GRY	ECM	
E08	BLK	ABS control module	
E33	N	Wheel speed sensor (FR)	
E35	BLU	Wheel speed sensor (FL)	
E36	BLK	A/C refrigerant pressure sensor	
E37	BLK	Outside air temperature sensor	
E40	YEL	Forward sensor	
E62	BLU	Windshield washer motor	
E63	GRN	Rear washer motor	
E64	GRY	Windshield wiper motor	
E65	BLK	Radiator fan motor	
E68	GLY	Headlight beam leveling actuator (R)	IF EQPD
E69	GLY	Headlight beam leveling actuator (L)	IF EQPD
E70	BLK	Condenser fan motor	
E151	BLK	Headlight (R)	
E152	BLK	Headlight (L)	
E159	GRY	Front turn signal light (R)	
E160	GRY	Front turn signal light (L)	
E161	N	Front position light (R)	
E162	N	Front position light (L)	
E163	BLK	Front fog light (R)	
E164	BLK	Front fog light (L)	
E165	N	Side turn signal light (R)	
E166	N	Side turn signal light (L)	
E183	GRY	Brake fluid level switch	
E221	BLK	Main relay	
E222	BLK	Radiator fan relay #1	
E223	BLK	Radiator fan relay #2	Except Taiwan
E224	BLK	Radiator fan relay #3	Except Taiwan
E225	BLK	Starting motor relay	
E226	BLK	Throttle actuator control relay	
E227	BLK	Fuel pump relay	
E229	BLK	A/C compressor relay	
E230	BLK	Condenser fan relay	
E231	BLK	A/T relay	A/T
E232	BLK	Headlight HI relay (R)	Taiwan
E233	BLK	Headlight HI relay (L)	Taiwan
E234	BLK	Front fog light relay	
E241	BLK	Shift lock relay	A/T
E247	BLK	Headlight LO relay (R)	Taiwan
E248	BLK	Headlight LO relay (L)	Taiwan
E281	BLK	Horn	
E311	BLK	Main fuse box	
E312	N	Main fuse box	
E371	N	Engine harness (To C343)	

Instrument Panel

S7RW0A910A003

E: Main harness, power steering wire (RHD)

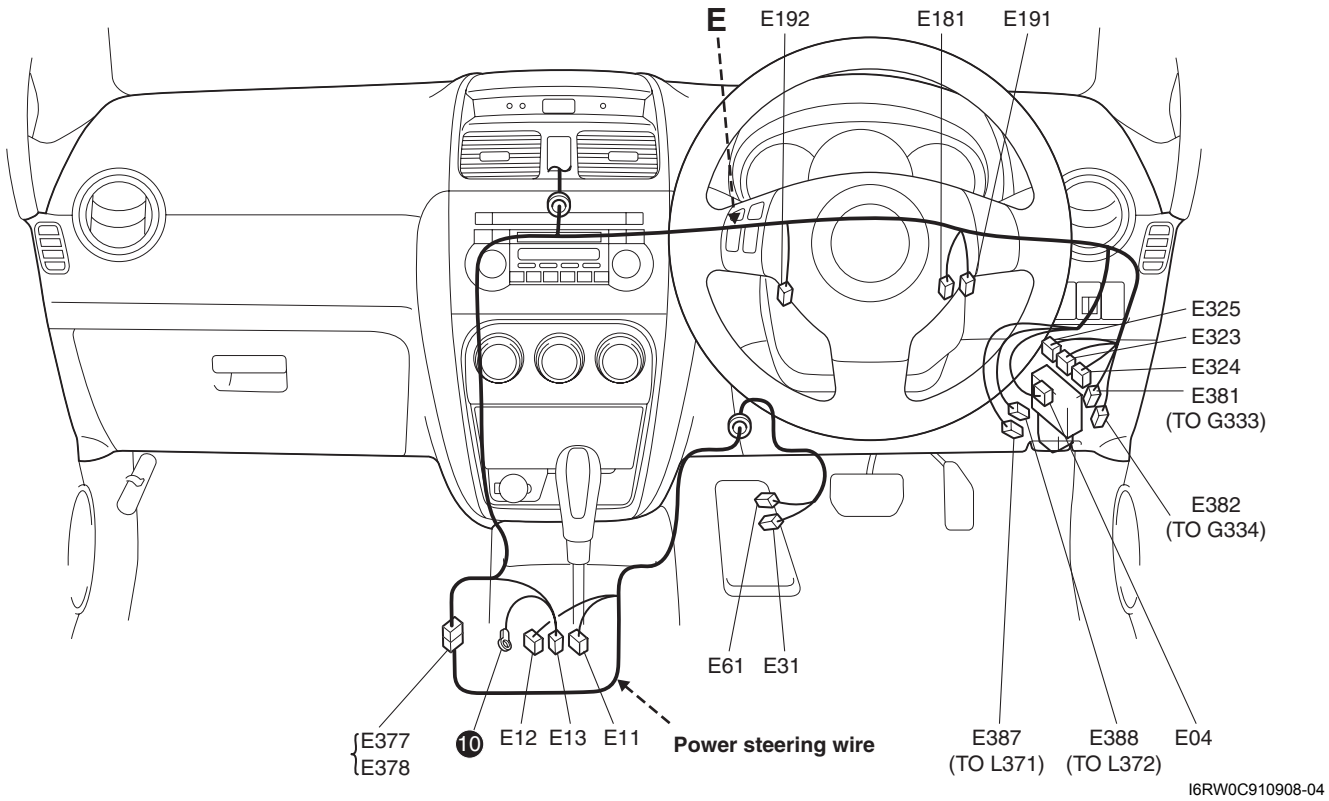

E: Main harness

No.	Color	Connective position	Remarks
E04	BLU	BCM	
E13	BLK	P/S control module	
E181	N	Brake light switch	
E191	BLK	APP (Acceleration pedal position) sensor	
E192	N	CPP (clutch pedal position) cut switch	
E323	BRN	J/B	
E324	N	J/B	
E325	N	J/B	
E377	BLU	Power steering wire (To E378)	
E381	GRY	Instrument panel harness (To G333)	
E382	BRN	Instrument panel harness (To G334)	
E383	GRN	Instrument panel harness (To G335)	IF EQPD
E387	N	Floor harness (To L371)	
E388	YEL	Floor harness (To L372)	

E: Power steering wire

No.	Color	Connective position	Remarks
E11	BLK	P/S control module	
E12	BLU	P/S control module	
E31	GRY	Torque sensor	
E61	GRY	P/S motor	
E378	BLU	Main harness (To E377)	

E: Main harness, power steering wire (LHD)

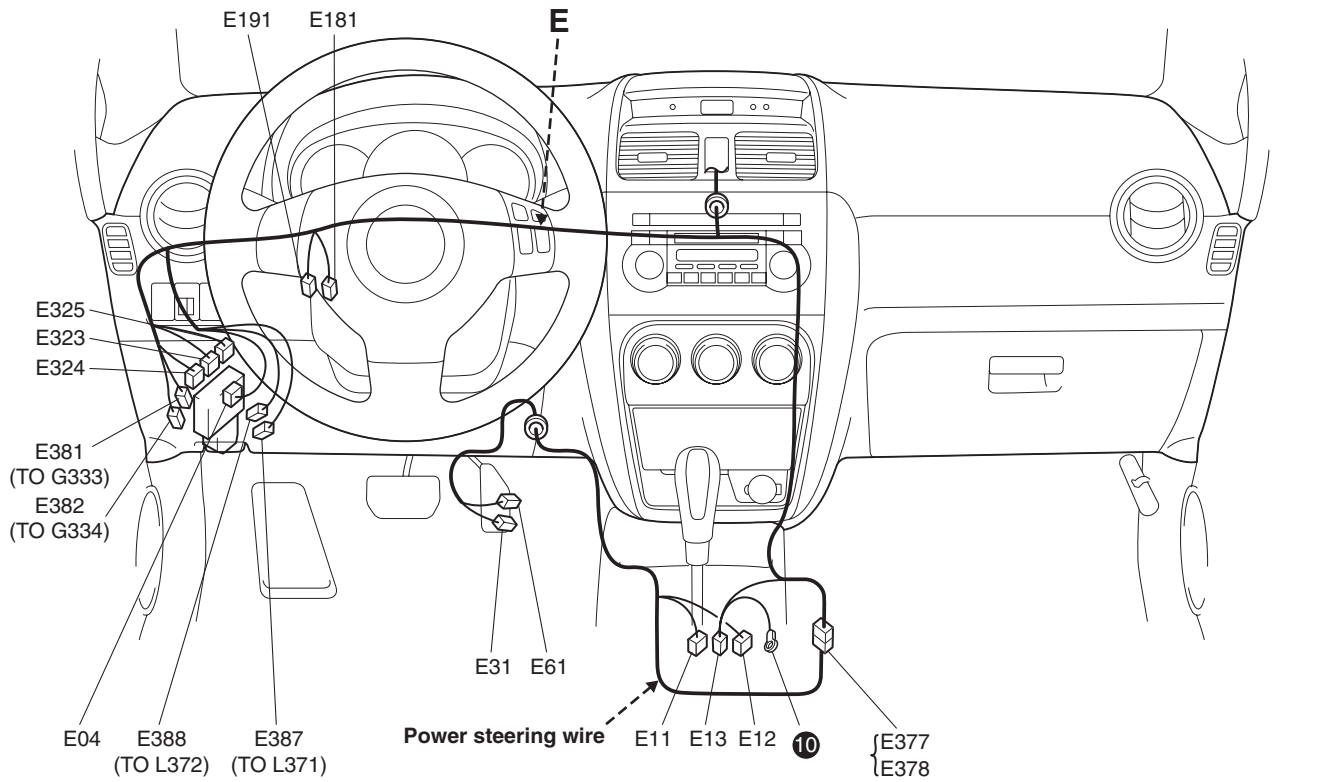

I6RW0C910909-02

E: Main harness

No.	Color	Connective position	Remarks
E04	BLU	BCM	Except Taiwan
E13	BLK	P/S control module	
E181	N	Brake light switch	
E191	BLK	APP (Acceleration pedal position) sensor	
E323	BRN	J/B	
E324	N	J/B	
E325	N	J/B	
E377	BLU	Power steering wire (To E378)	
E381	GRY	Instrument panel harness (To G333)	
E382	BRN	Instrument panel harness (To G334)	
E387	N	Floor harness (To L371)	
E388	YEL	Floor harness (To L372)	

E: Power steering wire

No.	Color	Connective position	Remarks
E11	BLK	P/S control module	
E12	BLU	P/S control module	
E31	GRY	Torque sensor	
E61	GRY	P/S motor	
E378	BLU	Main harness (To E377)	

G: Instrument panel harness, Instrument panel antenna wire / S: Contact coil (RHD)

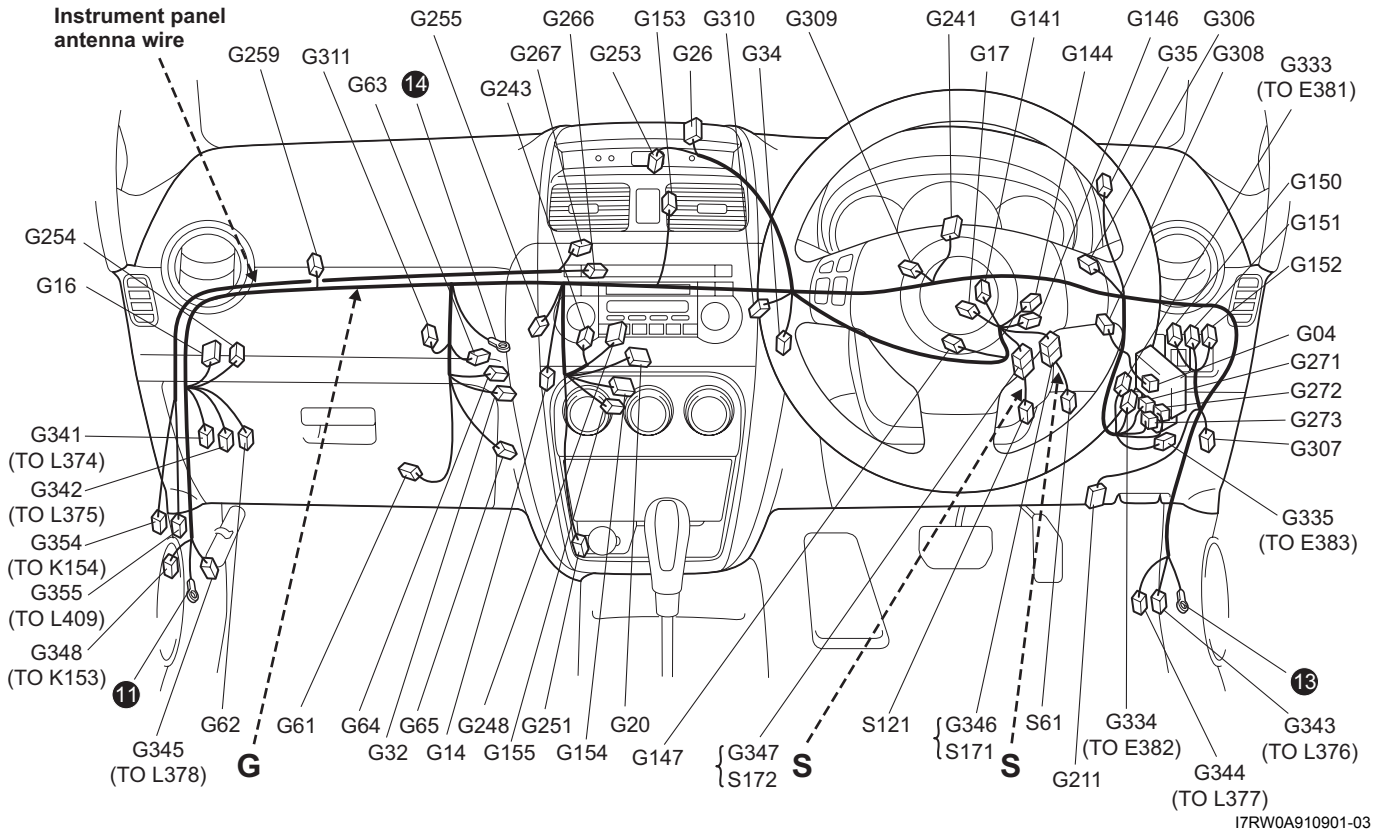

I7RW0A910901-03

G: Instrument panel harness

No.	Color	Connective position	Remarks
G04	BLU	BCM	
G14	N	Auto leveling control module	IF EQPD
G16	N	KLS control module	IF EQPD
G17	BLK	ICM	
G20	GRN	HVAC control module	Auto A/C
G26	N	4WD control module	IF EQPD
G32	N	Evaporator temperature sensor	
G34	N	Inside air temperature sensor	Auto A/C
G35	N	Sunload sensor	Auto A/C
G61	N	Blower motor	
G62	BLK	Air intake control actuator	
G63	BLK	Air flow control actuator	Auto A/C
G64	BLK	Temperature control actuator	Auto A/C
G65	N	Blower motor controller	
G141	BLK	COMB switch	
G144	N	COMB switch	
G146	N	Main switch (key)	
G147	N	IG switch	
G150	GRY	ILL cancel switch	IF EQPD
G151	GRN	Front fog switch	
G152	N	Headlight leveling switch	IF EQPD
G153	N	Hazard switch	
G154	GRN	HVAC control unit	Manual A/C
G155	BRN	Blower speed selector	Manual A/C
G211	BLK	DLC	
G241	GRY	COMB meter	
G243	N	Navigation	IF EQPD
G248	BLU	Audio (Navigation)	
G251	N	ACC socket	

No.	Color	Connective position	Remarks
G253	GRN	Multi information display	
G254	N	Keyless receiver	IF EQPD
G255	BLK	Diode #1	Auto A/C
G259	ORN	Passenger inflator	
G271	N	J/B	
G272	N	J/B	
G273	N	J/B	
G306	N	J/C	
G307	N	J/C	IF EQPD
G308	N	J/C	
G309	GRY	J/C	
G310	N	J/C	Auto A/C
G311	GRY	J/C	
G333	GRY	Main harness (To E381)	
G334	BRN	Main harness (To E382)	
G335	GRN	Main harness (To E383)	IF EQPD
G341	BLU	Floor harness (To L374)	
G342	N	Floor harness (To L375)	IF EQPD
G343	N	Floor harness (To L376)	
G344	YEL	Floor harness (To L377)	
G345	YEL	Floor harness (To L378)	
G346	N or BLK	Contact coil (To S171)	
G347	YEL	Contact coil (To S172)	
G348	N	Roof audio antenna wire (To K153)	

G: Instrument panel antenna wire

No.	Color	Connective position	Remarks
G266	GRY	Navigation	IF EQPD
G267	GRY	Audio (Navigation)	
G354	BLK	Roof audio antenna wire (To K154)	
G355	GRY	Floor antenna wire (To L409)	IF EQPD

S: Contact coil

No.	Color	Connective position	Remarks
S61	—	Steering switch (Horn, Auto cruise, Audio control)	
S121	—	Driver inflator	
S171	—	Instrument panel harness (To G346)	
S172	—	Instrument panel harness (To G347)	

G: Instrument panel harness, Instrument panel antenna wire / S: Contact coil (LHD)

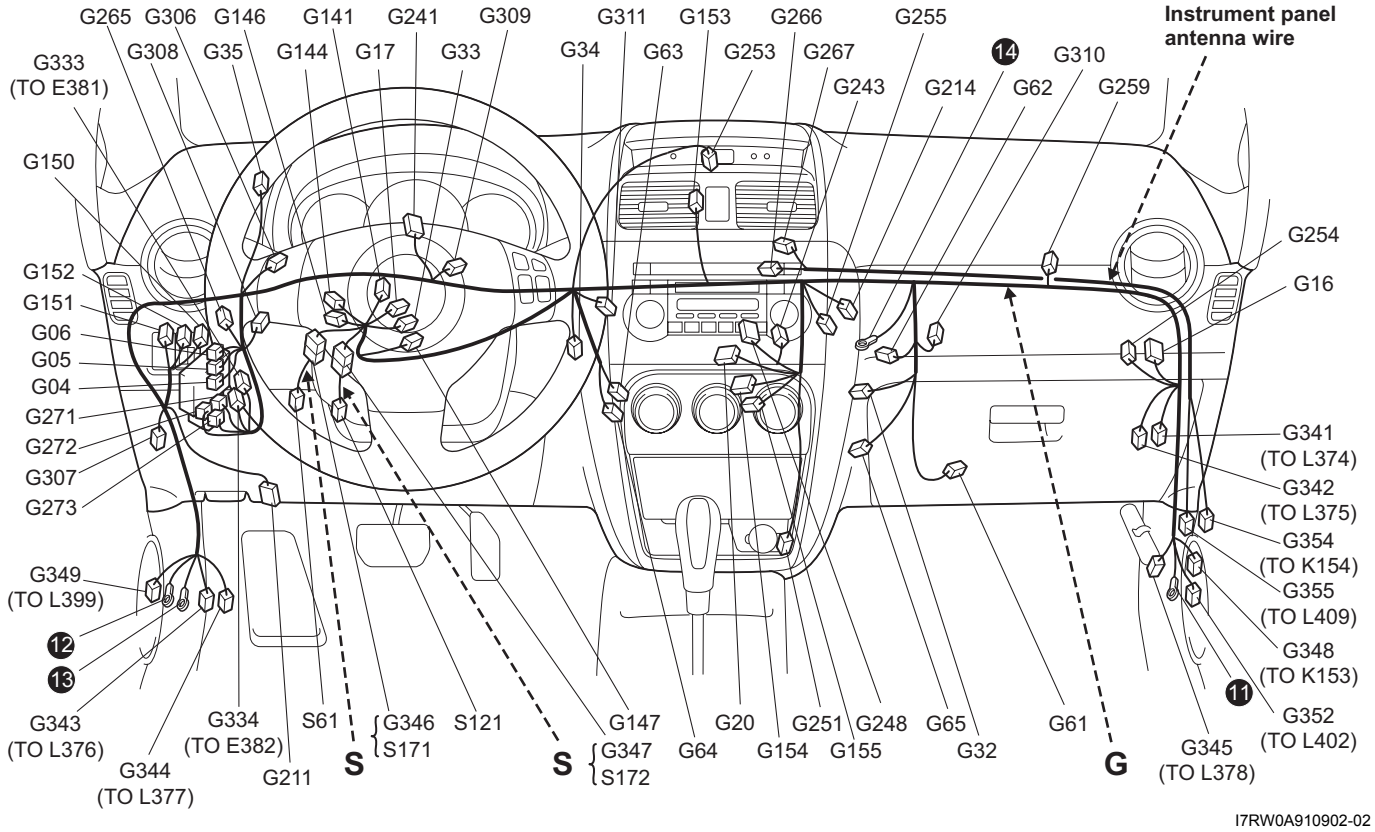

G: Instrument panel harness

No.	Color	Connective position	Remarks
G04	N or BLU	BCM	
G05	N	BCM	Taiwan
G06	BLK	BCM	Taiwan
G16	N	KLS control module	IF EQPD
G17	BLK	ICM	
G20	GRN	HVAC control module	Auto A/C
G32	N	Evaporator temperature sensor	
G33	N	Steering angle sensor	IF EQPD
G34	N	Inside air temperature sensor	Auto A/C
G35	N	Sunload sensor	Auto A/C
G61	N	Blower motor	
G62	BLK	Air intake control actuator	
G63	BLK	Air flow control actuator	Auto A/C
G64	BLK	Temperature control actuator	Auto A/C
G65	N	Blower motor controller	
G141	BLK	COMB switch	
G144	N	COMB switch	
G146	N	Main switch (key)	
G147	N	IG switch	
G150	GRY	ILL cancel switch	IF EQPD
G151	GRN	Front fog switch	
G152	N	Headlight leveling switch	IF EQPD
G153	N	Hazard switch	
G154	GRN	HVAC control unit	Manual A/C
G155	BRN	Blower speed selector	Manual A/C
G211	BLK	DLC	
G214	N	DRL controller	IF EQPD
G241	GRY	COMB meter	
G243	N	Navigation	IF EQPD

No.	Color	Connective position	Remarks
G248	BLU	Audio (Navigation)	
G251	N	ACC socket	
G253	GRN	Multi information display	
G254	N	Keyless receiver	IF EQPD
G255	BLK	Diode #1	Auto A/C
G259	ORN	Passenger inflator #1	
G265	N	Security option	Taiwan
G271	N	J/B	
G272	N	J/B	
G273	N	J/B	
G306	N	J/C	
G307	N	J/C	IF EQPD
G308	N	J/C	
G309	GRY	J/C	
G310	N	J/C	Auto A/C
G311	GRY	J/C	
G333	GRY or N	Main harness (To E381)	
G334	BRN	Main harness (To E382)	
G341	BLU	Floor harness (To L374)	
G342	N	Floor harness (To L375)	IF EQPD
G343	N	Floor harness (To L376)	
G344	YEL	Floor harness (To L377)	
G345	YEL	Floor harness (To L378)	
G346	N	Contact coil (To S171)	
G347	YEL	Contact coil (To S172)	
G348	N	Roof audio antenna wire (To K153)	
G349	YEL	Floor harness (To L399)	Taiwan
G352	N	Floor harness (To L402)	Taiwan

G: Instrument panel antenna wire

No.	Color	Connective position	Remarks
G266	GRY	Navigation	IF EQPD
G267	GRY	Audio (Navigation)	
G354	BLK	Roof audio antenna wire (To K154)	
G355	GRY	Floor antenna wire (To L409)	IF EQPD

S: Contact coil

No.	Color	Connective position	Remarks
S61	—	Steering switch (Horn, Audio control)	
S121	—	Driver inflator	
S171	—	Instrument panel harness (To G346)	
S172	—	Instrument panel harness (To G347)	

Door, Roof

S7RW0A910A004

J: Front and rear door wire and rear door wire / K: Roof wire, Roof audio antenna wire (RHD)

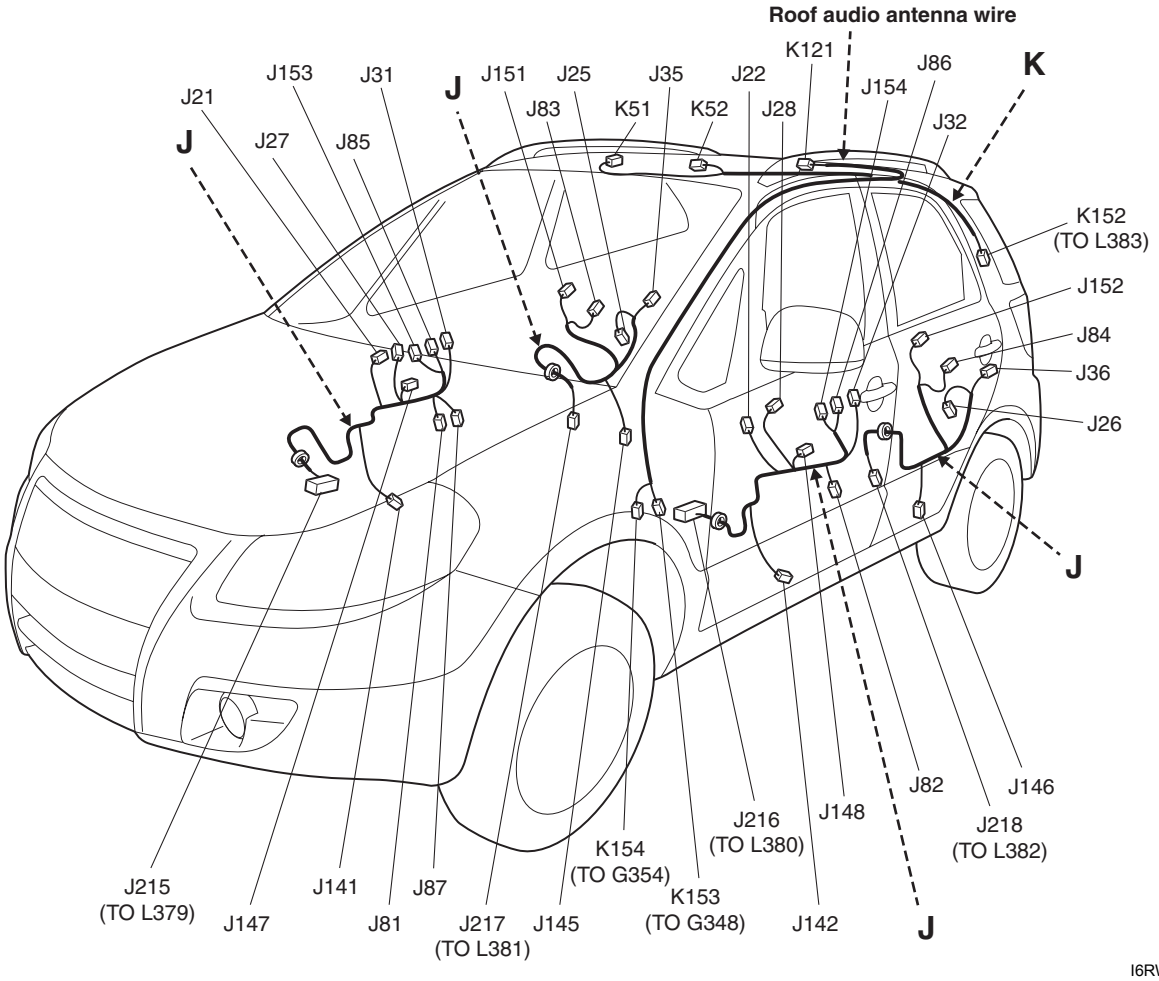

I6RW0C910911-02

J: Door harness (Driver side)

No.	Color	Connective position	Remarks
J21	BLK	Front power window motor (Driver side)	
J27	N	Mirror motor (Driver side)	
J31	N	Front door lock motor (Driver side)	
J81	BLU	Power window main switch	
J85	N	Request switch (Driver side)	IF EQPD
J87	N	Mirror switch	
J141	/N	Front speaker (R)	
J147	BLK	Tweeter (R)	IF EQPD
J153	N	Door antenna (Driver side)	IF EQPD
J215	GRY	Floor harness (To L379)	

J: Door harness (Passenger side)

No.	Color	Connective position	Remarks
J22	BLK	Front power window motor (Passenger side)	
J28	N	Mirror motor (Passenger side)	
J32	N	Front door lock motor (Passenger side)	
J82	N	Power window sub switch	
J86	N	Request switch (Passenger side)	IF EQPD
J142	N	Front speaker (L)	
J148	BLK	Tweeter (L)	IF EQPD
J154	N	Door antenna (Passenger side)	IF EQPD
J216	GRY	Floor harness (To L380)	

J: Rear door wire

No.	Color	Connective position	Remarks
J25	BLK	Rear power window motor (R)	
J26	BLK	Rear power window motor (L)	
J35	N	Rear door lock motor (R)	
J36	N	Rear door lock motor (L)	
J83	N	Rear power window sub switch (R)	
J84	N	Rear power window sub switch (L)	
J145	N	Rear speaker (R)	
J146	N	Rear speaker (L)	
J151	BLK	Rear Tweeter (R)	IF EQPD
J152	BLK	Rear Tweeter (L)	IF EQPD
J217	N	Floor harness (To L381)	
J218	N	Floor harness (To L382)	

K: Roof wire

No.	Color	Connective position	Remarks
K51	N	Interior light	
K52	N	Spot light	
K152	N	Floor harness (To L383)	

K: Roof audio antenna wire

No.	Color	Connective position	Remarks
K121	N	Antenna amplifier	
K153	N	Instrument panel harness (To G348)	
K154	BLK	Instrument panel antenna wire (To G354)	

J: Front and rear door wire and rear door wire / K: Roof wire, Roof audio antenna wire (LHD)

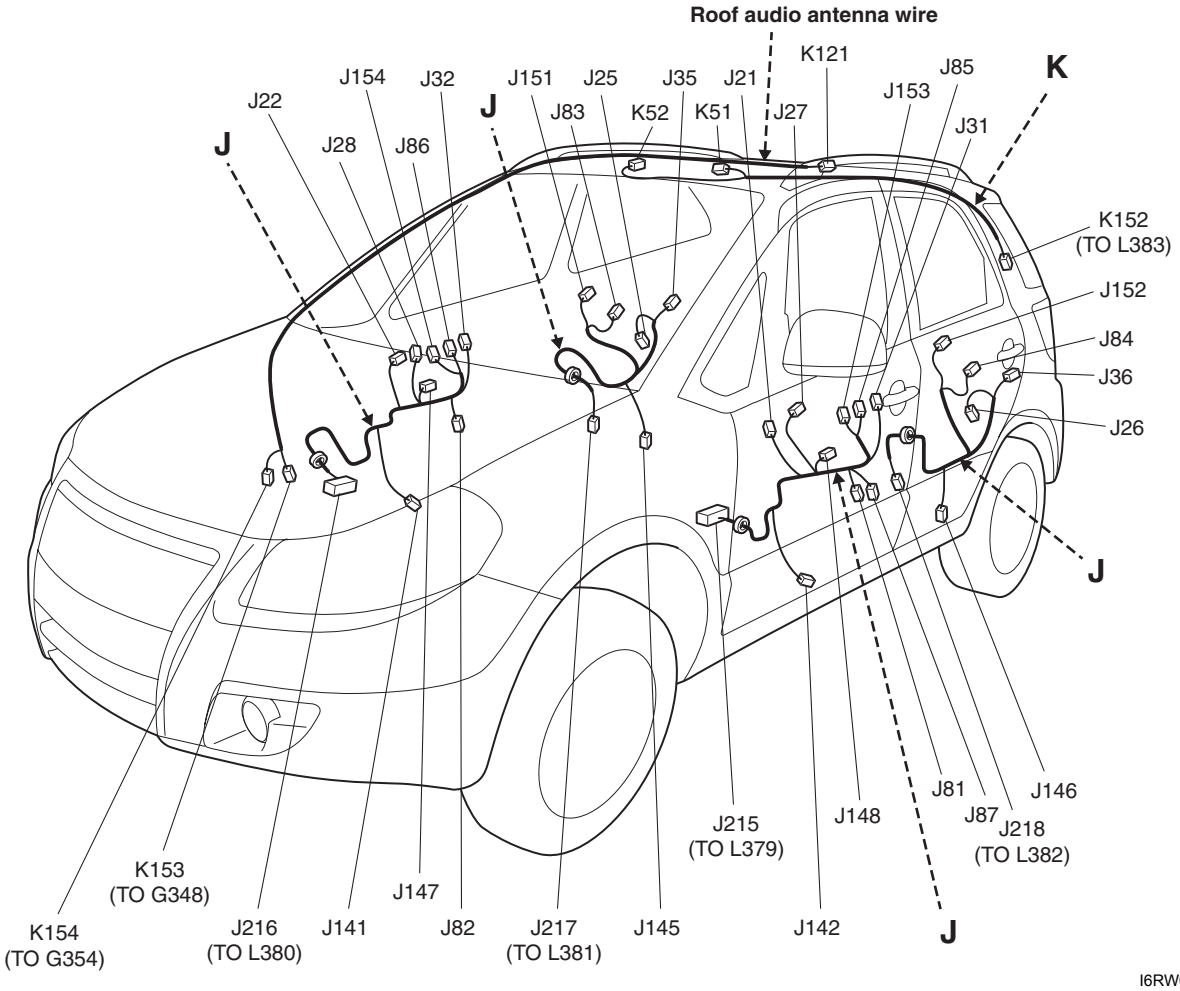

J: Door harness (Driver side)

No.	Color	Connective position	Remarks
J21	BLK	Front power window motor (Driver side)	
J27	N	Mirror motor (Driver side)	
J31	N	Front door lock motor (Driver side)	
J81	BLU	Power window main switch	
J85	N	Request switch (Driver side)	IF EQPD
J87	N	Mirror switch	
J142	N	Front speaker (L)	
J148	BLK	Tweeter (L)	IF EQPD
J153	N	Door antenna (Driver side)	IF EQPD
J215	GRY	Floor harness (To L379)	

J: Door harness (Passenger side)

No.	Color	Connective position	Remarks
J22	BLK	Front power window motor (Passenger side)	
J28	N	Mirror motor (Passenger side)	
J32	N	Front door lock motor (Passenger side)	
J82	N	Power window sub switch	
J86	N	Request switch (Passenger side)	IF EQPD
J141	N	Front speaker (R)	
J147	BLK	Tweeter (R)	IF EQPD
J154	N	Door antenna (Passenger side)	IF EQPD
J216	GRY	Floor harness (To L380)	

J: Rear door wire

No.	Color	Connective position	Remarks
J25	BLK	Rear power window motor (R)	
J26	BLK	Rear power window motor (L)	
J35	N	Rear door lock motor (R)	
J36	N	Rear door lock motor (L)	
J83	N	Rear power window sub switch (R)	
J84	N	Rear power window sub switch (L)	
J145	N	Rear speaker (R)	
J146	N	Rear speaker (L)	
J151	BLK	Rear Tweeter (R)	IF EQPD
J152	BLK	Rear Tweeter (L)	IF EQPD
J217	N	Floor harness (To L381)	
J218	N	Floor harness (To L382)	

K: Roof wire

No.	Color	Connective position	Remarks
K51	N	Interior light	
K52	N	Spot light	
K152	N	Floor harness (To L383)	

K: Roof audio antenna wire

No.	Color	Connective position	Remarks
K121	N	Antenna amplifier	
K153	N	Instrument panel harness (To G348)	
K154	BLK	Instrument panel antenna wire (To G354)	

Floor

S7RW0A910A005

L: Floor harness, Coupling harness, Floor antenna wire / Q: Side curtain air-bag wire, Side air-bag (R) harness, Side air-bag (L) harness / R: Fuel pump wire (RHD, Hatchback)

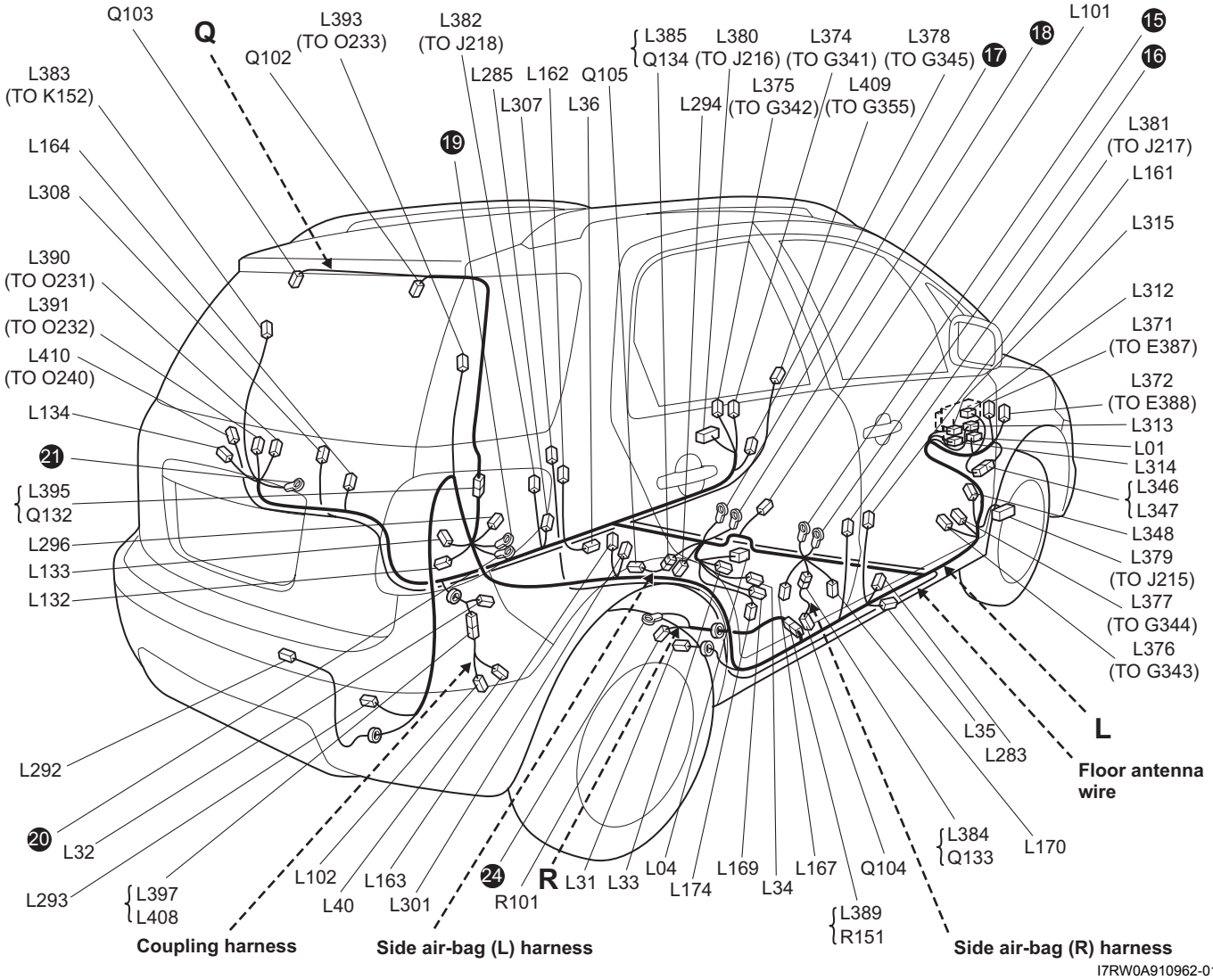

I7RW0A910962-01

L: Floor harness

No.	Color	Connective position	Remarks
L01	BLU	BCM	
L04	PNK	A/B SDM	4ch
L04	BRN	A/B SDM	8ch
L31	GRY	Wheel speed sensor (RR)	
L32	GRY	Wheel speed sensor (RL)	
L33	BLK	G sensor	IF EQPD
L34	BLK	YAW/G sensor	IF EQPD
L35	N	Driver side-sensor	8ch
L36	N	Passenger side-sensor	8ch
L101	N	A/T shift lever assy (Shift lock solenoid, 3 position switch)	
L132	GRY	Luggage compartment light	
L133	N	Rear combination light (R)	
L134	N	Rear combination light (L)	
L161	N	Front door switch (Driver side)	
L162	N	Front door switch (Passenger side)	
L163	N	Rear door switch (R)	
L164	N	Rear door switch (L)	

No.	Color	Connective position	Remarks
L167	BLK	Parking brake switch	
L169	BRN	ESP® off switch	IF EQPD
L170	N	Seat belt switch	
L174	N	2WD/4WD switch	IF EQPD
L283	BLK	Pretensioner (Driver side)	
L285	BLK	Pretensioner (Passenger side)	
L292	GRY	Back antenna	IF EQPD
L293	BRN	Luggage antenna	IF EQPD
L294	BRN	Inside antenna	IF EQPD
L296	N	Rear ACC socket	
L301	BLK	Diode #2	
L312	N	J/B	
L313	YEL	J/B	
L314	N	J/B	
L315	N	J/B	
L346	N	J/C	
L347	N	J/C	
L348	GRY	J/C	
L371	N	Main harness (To E387)	
L372	YEL	Main harness (To E388)	
L374	BLU	Instrument panel harness (To G341)	
L375	N	Instrument panel harness (To G342)	IF EQPD
L376	N	Instrument panel harness (To G343)	
L377	YEL	Instrument panel harness (To G344)	
L378	YEL	Instrument panel harness (To G345)	
L379	GRY	Door harness (Driver side) (To J215)	
L380	GRY	Door harness (Passenger side) (To J216)	
L381	N	Rear door wire (To J217)	
L382	N	Rear door wire (To J218)	
L383	N	Roof wire (To K152)	
L384	YEL	Side air-bag (R) harness (To Q133)	8ch
L385	YEL	Side air-bag (L) harness (To Q134)	8ch
L389	GRY	Fuel pump wire (To R151)	
L390	N	Rear end door harness (To O231)	
L391	N	Rear end door harness (To O232)	IF EQPD
L393	N	High mounted stop light wire (To O233)	
L395	YEL	Side curtain air-bag wire (To Q132)	8ch
L397	GRY	Coupling harness (To L408)	IF EQPD

L: Coupling harness

No.	Color	Connective position	Remarks
L40	BLK	Coupling air temperature sensor	IF EQPD
L102	GRY	Coupling solenoid	IF EQPD
L408	GRY	Floor harness (To L397)	IF EQPD

L: Floor antenna wire

No.	Color	Connective position	Remarks
L307	BLK	TV antenna #1	IF EQPD
L308	BLK	TV antenna #2	IF EQPD
L409	GRY	Instrument panel antenna wire (To G355)	IF EQPD
L410	GRY	Back door antenna wire (To O240)	IF EQPD

Q: Side curtain air-bag wire

No.	Color	Connective position	Remarks
Q102	BLK	Side curtain air-bag (R)	8ch
Q103	BLK	Side curtain air-bag (L)	8ch
Q132	YEL	Floor harness (To L395)	8ch

Q: Side air-bag (R) harness

No.	Color	Connective position	Remarks
Q104	BLK	Side air-bag inflator (R)	8ch
Q133	YEL	Floor harness (To L384)	8ch

Q: Side air-bag (L) harness

No.	Color	Connective position	Remarks
Q105	BLK	Side air-bag inflator (L)	8ch
Q134	YEL	Floor harness (To L385)	8ch

R: Fuel pump wire

No.	Color	Connective position	Remarks
R101	BLK	Fuel pump and gauge	8ch
R151	GRY	Floor harness (To L389)	8ch

L: Floor harness, Coupling harness, Floor antenna wire / Q: Side air-bag (R) harness, Side air-bag (L) harness / R: Fuel pump wire (RHD, Sedan)

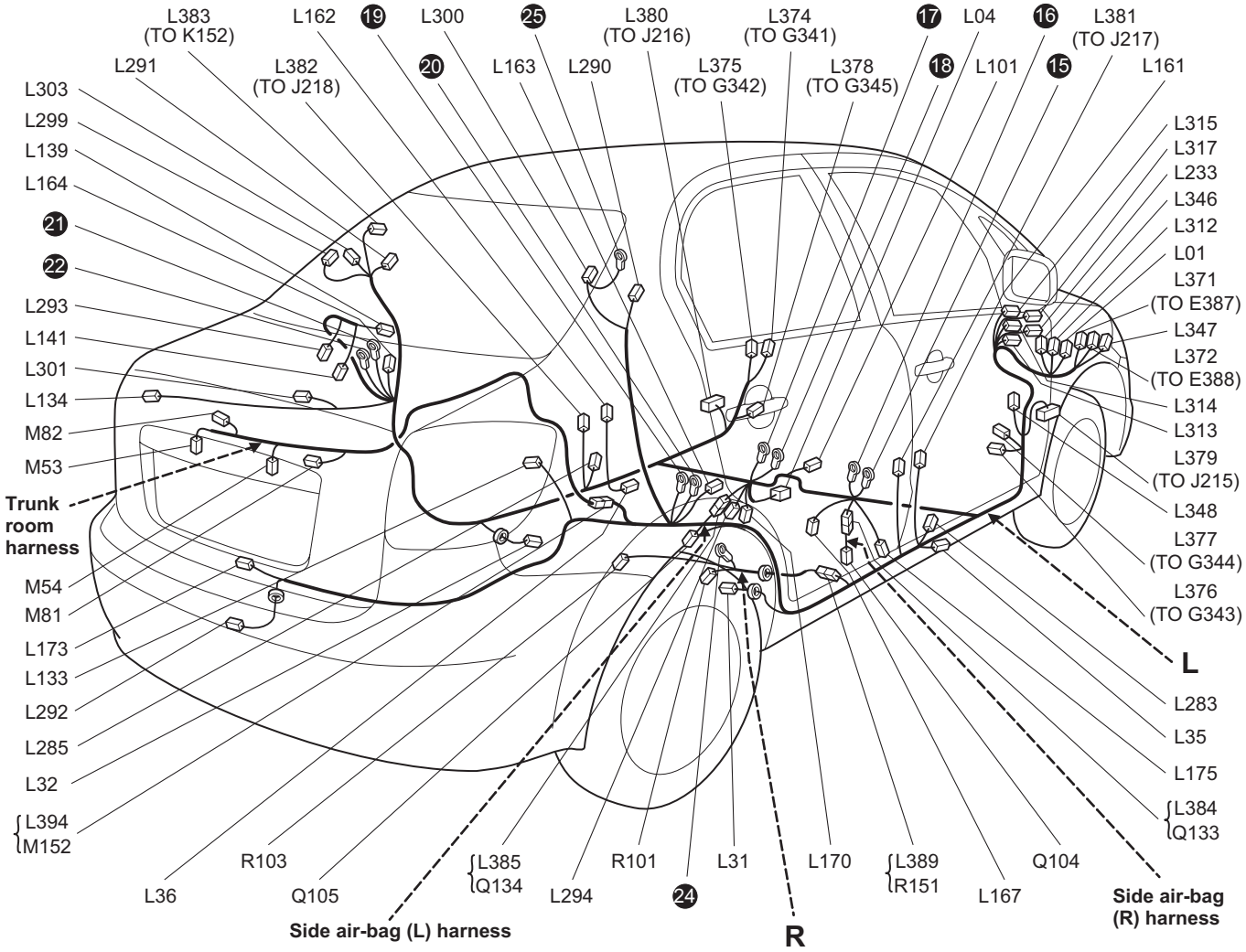

I7RW0A910903-03

L: Floor harness

No.	Color	Connective position	Remarks
L01	BLU	BCM	
L04	PNK	A/B SDM	4ch
L04	BRN	A/B SDM	8ch
L31	GRY	Wheel speed sensor (RR)	
L32	GRY	Wheel speed sensor (RL)	
L35	N	Driver side-sensor	8ch

No.	Color	Connective position	Remarks
L36	N	Passenger side-sensor	8ch
L101	N	A/T shift lever assy (Shift lock solenoid, 3 position switch)	
L133	N	Rear combination light (R)	
L134	N	Rear combination light (L)	
L139	N	High mounted stop light	
L141	N	Trunk room light	
L161	N	Front door switch (Driver side)	
L162	N	Front door switch (Passenger side)	
L163	N	Rear door switch (R)	
L164	N	Rear door switch (L)	
L167	BLK	Parking brake switch	
L170	N	Seat belt switch	
L173	N	Trunk room light switch	
L233	BLK	Rear defogger relay	
L283	BLK	Pretensioner (Driver side)	
L285	BLK	Pretensioner (Passenger side)	
L290	BLK	Side curtain air-bag (R)	
L291	BLK	Side curtain air-bag (L)	
L292	GRY	Back antenna	IF EQPD
L293	BRN	Luggage antenna	IF EQPD
L294	BRN	Inside antenna	IF EQPD
L299	BLK	Rear defogger (+)	
L300	BLK	Rear defogger (-)	
L301	N	Diode	
L303	N	Condenser (+)	
L312	N	J/B	
L313	YEL	J/B	
L314	N	J/B	
L315	N	J/B	
L317	N	Individual circuit fuse box No.3	
L346	N	J/C	
L347	N	J/C	
L348	GRY	J/C	
L371	N	Main harness (To E387)	
L372	YEL	Main harness (To E388)	
L374	BLU	Instrument panel harness (To G341)	
L375	N	Instrument panel harness (To G342)	IF EQPD
L376	N	Instrument panel harness (To G343)	
L377	YEL	Instrument panel harness (To G344)	4ch
L378	YEL	Instrument panel harness (To G345)	4ch
L379	GRY	Door harness (Driver side) (To J215)	
L380	GRY	Door harness (Passenger side) (To J216)	
L381	N	Rear door wire (To J217)	
L382	N	Rear door wire (To J218)	
L383	N	Roof wire (To K152)	
L384	YEL	Side air-bag (R) harness (To Q133)	8ch
L385	YEL	Side air-bag (L) harness (To Q134)	8ch
L389	GRY	Fuel pump wire (To R151)	
L394	BLK	Trunk room harness (To M152)	

M: Trunk room harness

No.	Color	Connective position	Remarks
M53	N	License plate light #1	
M54	N	License plate light #2	
M81	N	Trunk room lock solenoid	
M82	N	Trunk room request switch	
M152	BLK	Floor harness (To L394)	

Q: Side air-bag (R) harness

No.	Color	Connective position	Remarks
Q104	BLK	Side air-bag inflator (R)	10ch
Q133	YEL	Floor harness (To L384)	10ch

Q: Side air-bag (L) harness

No.	Color	Connective position	Remarks
Q105	BLK	Side air-bag inflator (L)	10ch
Q134	YEL	Floor harness (To L385)	10ch

R: Fuel pump wire

No.	Color	Connective position	Remarks
R101	BLK	Fuel pump and gauge	
R103	BLK	ELCM	IF EQPD
R151	GRY	Floor harness (To L389)	

L: Floor harness, Floor antenna wire / Q: Side curtain air-bag wire, Side air-bag (R) harness, Side air-bag (L) harness / R: Fuel pump wire (LHD, Hatchback)

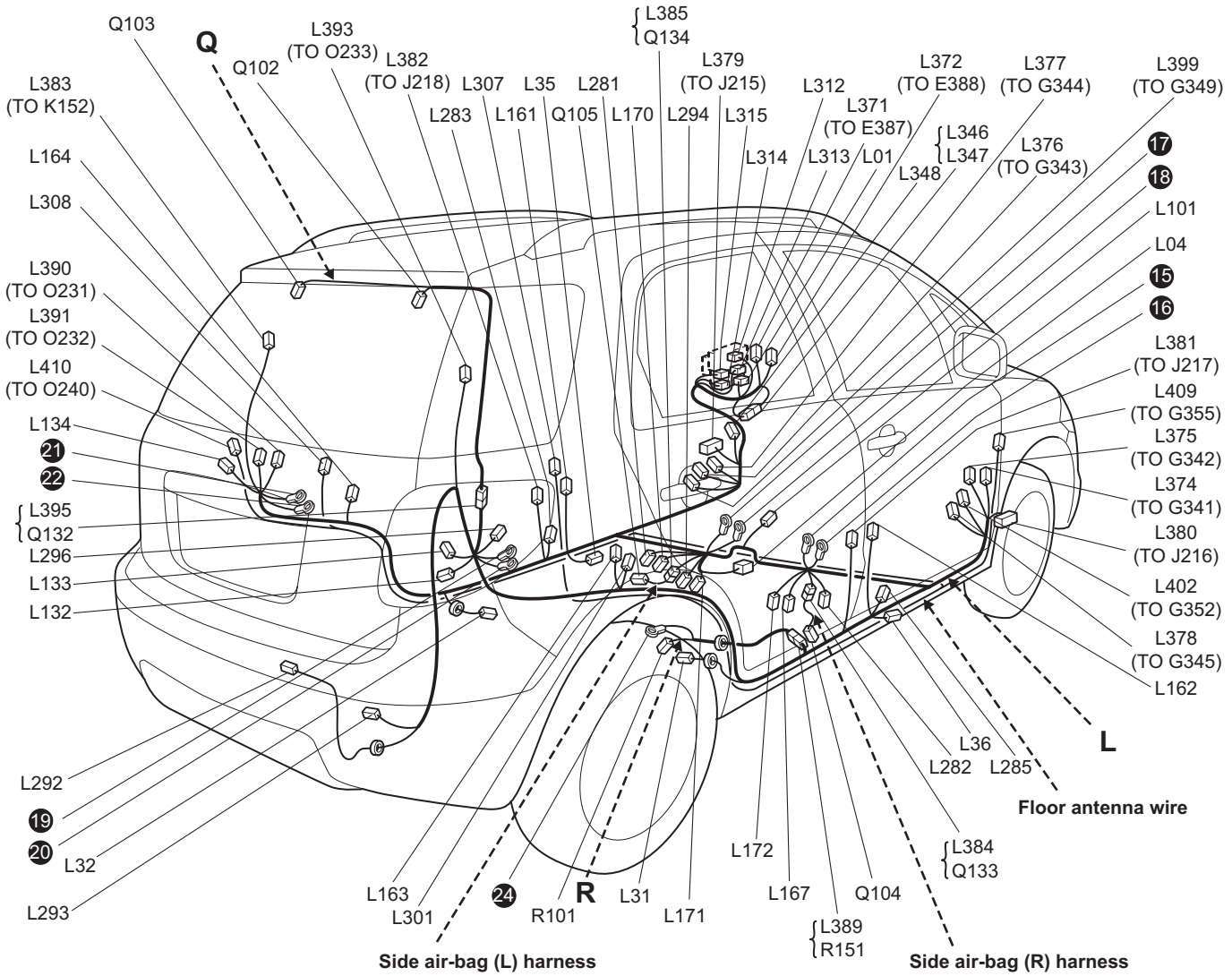

I7RW0A910904-02

L: Floor harness

No.	Color	Connective position	Remarks
L01	BLU	BCM	Except Taiwan
L04	PNK	A/B SDM	4ch
L04	BRN	A/B SDM	8ch
L31	GRY	Wheel speed sensor (RR)	
L32	GRY	Wheel speed sensor (RL)	
L35	N	Driver side-sensor	8ch
L36	N	Passenger side-sensor	8ch
L101	N	A/T shift lever assy (Shift lock solenoid, 3 position switch)	
L132	GRY	Luggage compartment light	
L133	N	Rear combination light (R)	
L134	N	Rear combination light (L)	
L161	N	Front door switch (Driver side)	
L162	N	Front door switch (Passenger side)	
L163	N	Rear door switch (R)	
L164	N	Rear door switch (L)	
L167	BLK	Parking brake switch	
L170	N	Seat belt switch	
L171	YEL	Seat heater switch (Driver side)	IF EQPD
L172	GRN	Seat heater switch (Passenger side)	IF EQPD
L281	N	Seat heater (Driver side)	IF EQPD
L282	N	Seat heater (Passenger side)	IF EQPD
L283	BLK	Pretensioner (Driver side)	
L285	BLK	Pretensioner (Passenger side)	
L292	GRY	Back antenna	IF EQPD
L293	BRN	Luggage antenna	IF EQPD
L294	BRN	Inside antenna	IF EQPD
L296	N	Rear ACC socket	IF EQPD
L301	BLK	Diode #2	
L312	N	J/B	
L313	YEL	J/B	
L314	N	J/B	
L315	N	J/B	
L346	N	J/C	
L347	N	J/C	
L348	GRY	J/C	
L371	N	Main harness (To E387)	
L372	YEL	Main harness (To E388)	
L374	BLU	Instrument panel harness (To G341)	
L375	N	Instrument panel harness (To G342)	IF EQPD
L376	N	Instrument panel harness (To G343)	
L377	YEL	Instrument panel harness (To G344)	
L378	YEL	Instrument panel harness (To G345)	
L379	GRY	Door harness (Driver side) (To J215)	
L380	GRY	Door harness (Passenger side) (To J216)	
L381	N	Rear door wire (To J217)	
L382	N	Rear door wire (To J218)	
L383	N	Roof wire (To K152)	
L384	YEL	Side air-bag (R) harness (To Q133)	8ch
L385	YEL	Side air-bag (L) harness (To Q134)	8ch
L389	GRY	Fuel pump wire (To R151)	
L390	N	Rear end door harness (To O231)	
L391	N	Rear end door harness (To O232)	IF EQPD
L393	N	High mounted stop light wire (To O233)	
L395	YEL	Side curtain air-bag wire (To Q132)	8ch
L399	YEL	Instrument panel harness (To G349)	Taiwan
L402	YEL	Instrument panel harness (To G352)	Taiwan

L: Floor antenna wire

No.	Color	Connective position	Remarks
L307	BLK	TV antenna #1	IF EQPD
L308	BLK	TV antenna #2	IF EQPD
L409	GRY	Instrument panel antenna wire (To G355)	IF EQPD
L410	GRY	Back door antenna wire (To O240)	IF EQPD

Q: Side curtain air-bag wire

No.	Color	Connective position	Remarks
Q102	BLK	Side curtain air-bag (R)	8ch
Q103	BLK	Side curtain air-bag (L)	8ch
Q132	YEL	Floor harness (To L395)	8ch

Q: Side air-bag (R) harness

No.	Color	Connective position	Remarks
Q104	BLK	Side air-bag inflator (R)	8ch
Q133	YEL	Floor harness (To L384)	8ch

Q: Side air-bag (L) harness

No.	Color	Connective position	Remarks
Q105	BLK	Side air-bag inflator (L)	8ch
Q134	YEL	Floor harness (To L385)	8ch

R: Fuel pump wire

No.	Color	Connective position	Remarks
R101	BLK	Fuel pump and gauge	
R151	GRY	Floor harness (To L389)	

L: Floor harness, Coupling harness, Floor antenna wire / M: Trunk room harness / Q: Side air-bag (R) harness, Side air-bag (L) harness / R: Fuel pump wire (LHD, Sedan)

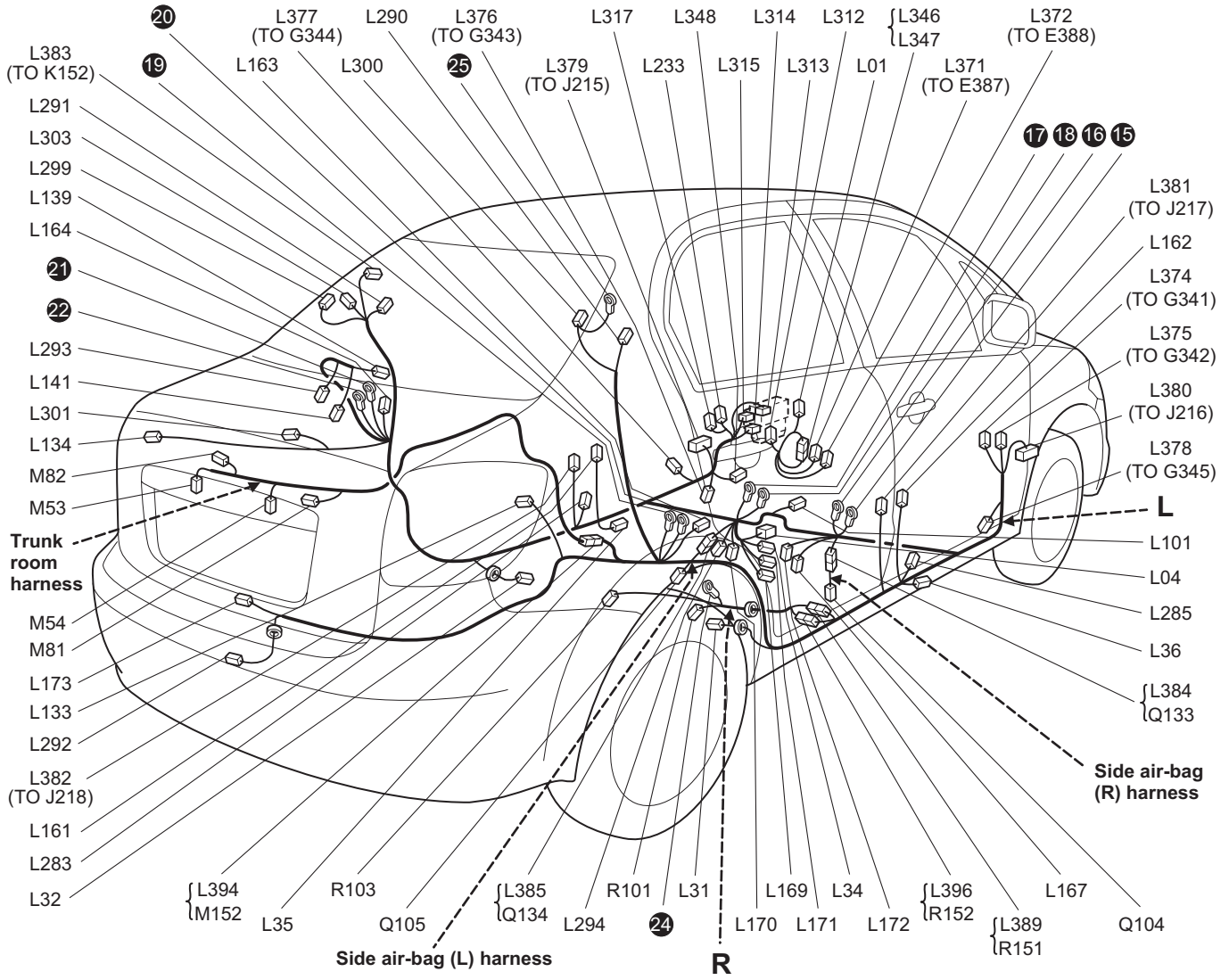

I7RW0A910905-02

L: Floor harness

No.	Color	Connective position	Remarks
L01	BLU	BCM	
L04	PNK	A/B SDM	4ch
L04	BRN	A/B SDM	8ch
L31	GRY	Wheel speed sensor (RR)	
L32	GRY	Wheel speed sensor (RL)	
L34	BLK	YAW/G sensor	IF EQPD
L35	N	Driver side-sensor	8ch
L36	N	Passenger side-sensor	8ch
L101	N	A/T shift lever assy (Shift solenoid, 3 position switch)	
L133	N	Rear combination light (R)	
L134	N	Rear combination light (L)	
L139	N	High mounted stop light	
L141	N	Trunk room light	
L161	N	Front door switch (Driver side)	
L162	N	Front door switch (Passenger side)	
L163	N	Rear door switch (R)	
L164	N	Rear door switch (L)	
L167	BLK	Parking brake switch	
L169	BRN	ESP® off switch	IF EQPD

No.	Color	Connective position	Remarks
L170	N	Seat belt switch	
L171	YEL	Seat heater switch (Driver side)	
L172	GRN	Seat heater switch (Passenger side)	
L173	N	Trunk room light switch	
L233	BLK	Rear defogger relay	
L283	BLK	Pretensioner (Driver side)	
L285	BLK	Pretensioner (Passenger side)	
L290	BLK	Side curtain air-bag (R)	
L291	BLK	Side curtain air-bag (L)	
L292	GRY	Back antenna	IF EQPD
L293	BRN	Luggage antenna	IF EQPD
L294	BRN	Inside antenna	IF EQPD
L299	BLK	Rear defogger (+)	
L300	BLK	Rear defogger (-)	
L301	N	Diode	
L303	N	Condenser (+)	
L312	N	J/B	
L313	YEL	J/B	
L314	N	J/B	
L315	N	J/B	
L317	N	Individual circuit fuse box No.3	
L346	N	J/C	
L347	N	J/C	
L348	GRY	J/C	
L371	N	Main harness (To E387)	
L372	YEL	Main harness (To E388)	
L374	BLU	Instrument panel harness (To G341)	
L375	N	Instrument panel harness (To G342)	IF EQPD
L376	N	Instrument panel harness (To G343)	
L377	YEL	Instrument panel harness (To G344)	4ch
L378	YEL	Instrument panel harness (To G345)	4ch
L379	GRY	Door harness (Driver side) (To J215)	
L380	GRY	Door harness (Passenger side) (To J216)	
L381	N	Rear door wire (To J217)	
L382	N	Rear door wire (To J218)	
L383	N	Roof wire (To K152)	
L384	YEL	Side air-bag (R) harness (To Q133)	8ch
L385	YEL	Side air-bag (L) harness (To Q134)	8ch
L389	GRY	Fuel pump wire (To R151)	
L394	BLK	Trunk room harness (To M152)	
L396	GRY	Fuel pump wire (To R152)	IF EQPD

M: Trunk room harness

No.	Color	Connective position	Remarks
M53	N	License plate light #1	
M54	N	License plate light #2	
M81	N	Trunk room lock solenoid	
M82	N	Trunk room request switch	
M152	BLK	Floor harness (To L394)	

Q: Side air-bag (R) harness

No.	Color	Connective position	Remarks
Q104	BLK	Side air-bag inflator (R)	10ch
Q133	YEL	Floor harness (To L384)	10ch

Q: Side air-bag (L) harness

No.	Color	Connective position	Remarks
Q105	BLK	Side air-bag inflator (L)	10ch
Q134	YEL	Floor harness (To L385)	10ch

R: Fuel pump wire

No.	Color	Connective position	Remarks
R101	BLK	Fuel pump and gauge	
R103	BLK	ELCM	IF EQPD
R151	GRY	Floor harness (To L389)	
R152	GRY	Floor harness (To L396)	IF EQPD

Rear

S7RW0A910A006

O: Rear end door harness, High mounted stop light wire, Rear end door antenna wire

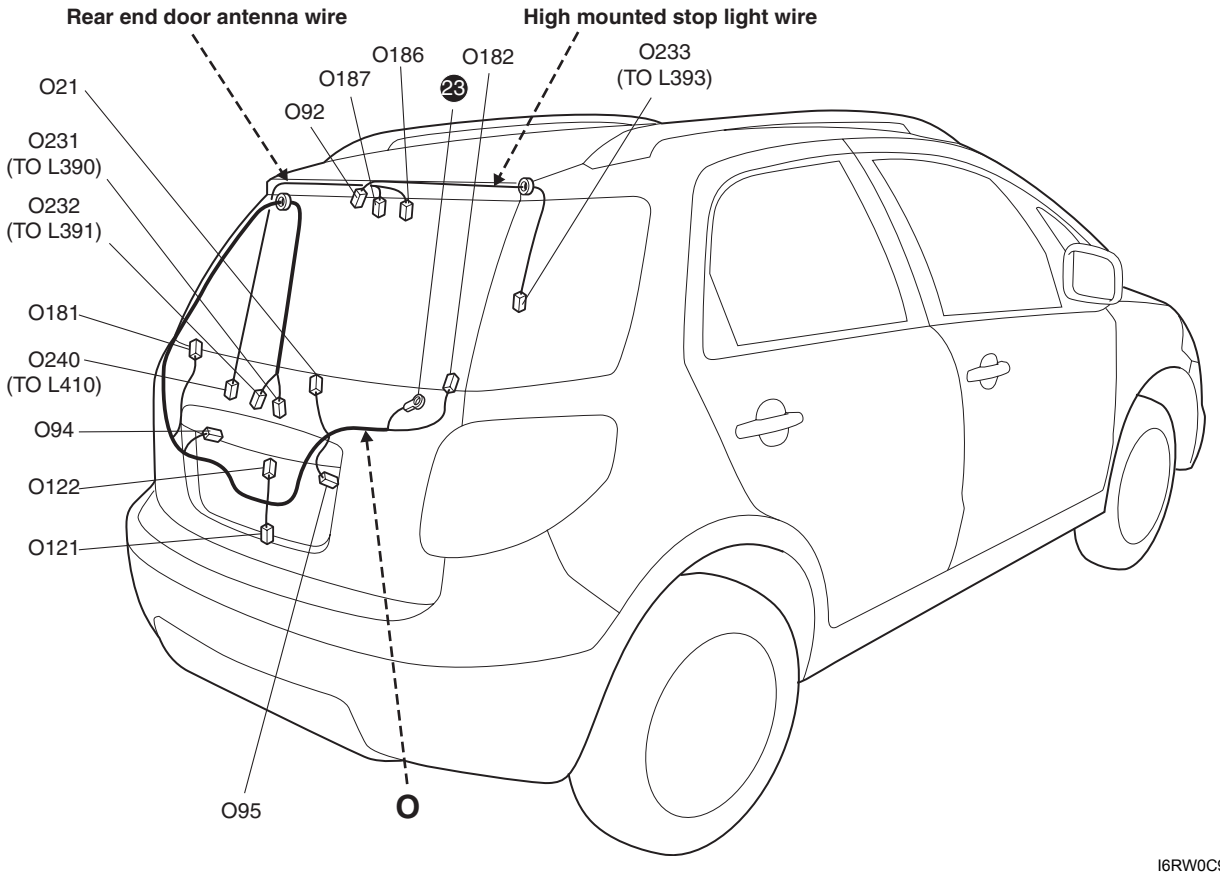

I6RW0C910916-01

O: Rear end door harness

No.	Color	Connective position	Remarks
O21	N	Rear wiper motor	
O94	N	License plate light #1	
O95	N	License plate light #2	
O121	N	Rear end door switch	
O122	N	Rear end door request switch	
O181	BLK	Rear defogger (+)	
O182	BLK	Rear defogger (–)	
O231	N	Floor harness (To L390)	
O232	N	Floor harness (To L391)	IF EQPD

O: High mounted stop light wire

No.	Color	Connective position	Remarks
O92	N	High mounted stop light	
O233	N	Floor harness (To L393)	

O: Rear end door antenna wire

No.	Color	Connective position	Remarks
O186	BLK	TV antenna #3	IF EQPD
O187	BLK	TV antenna #4	IF EQPD
O240	GRY	Floor antenna wire (To L410)	IF EQPD

Ground Point

Ground (earth) Point

S7RW0A910C001

Refer to “Connector Layout Diagram”.

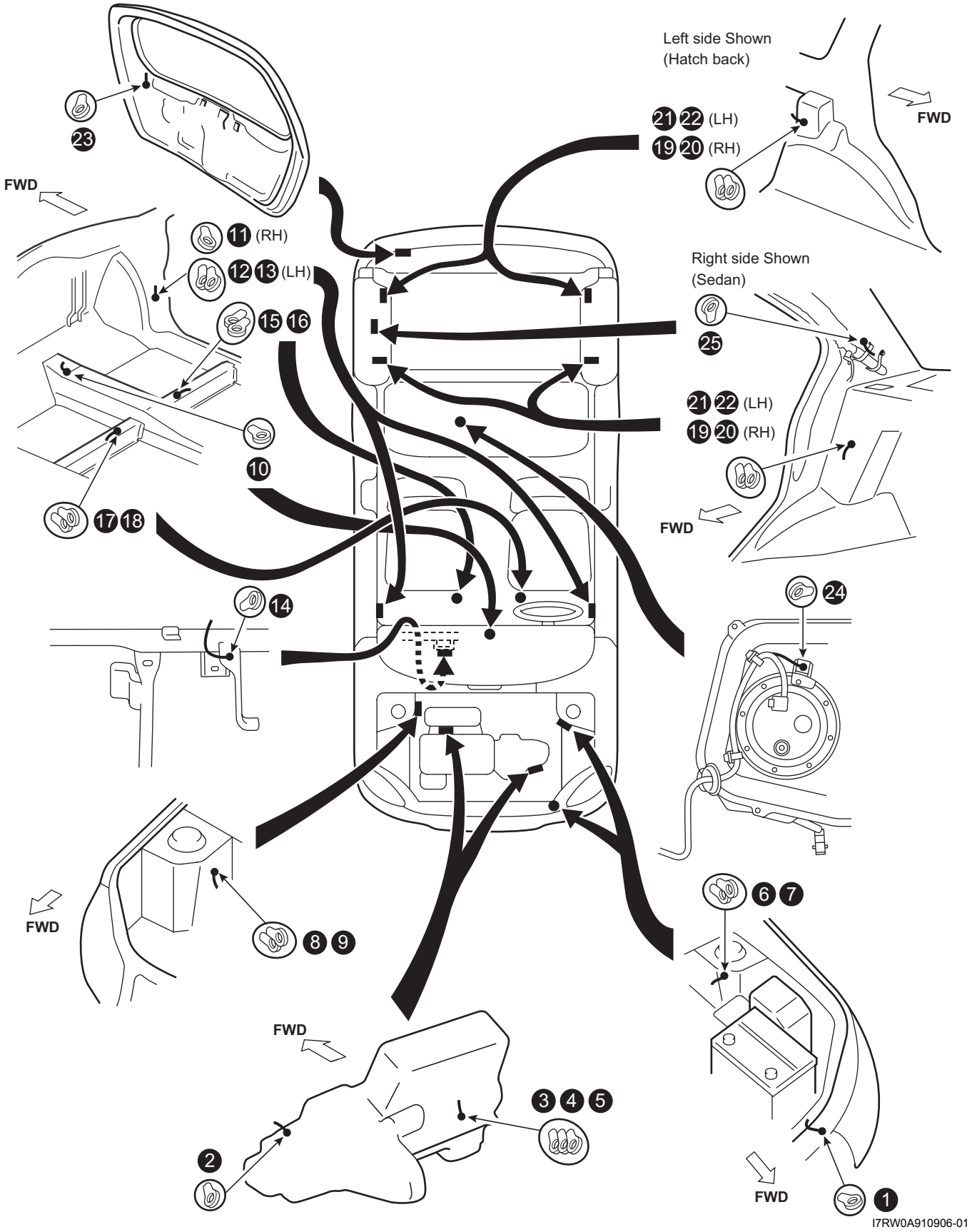

Power Supply Diagram

Power Supply Diagram

S7RW0A910D001

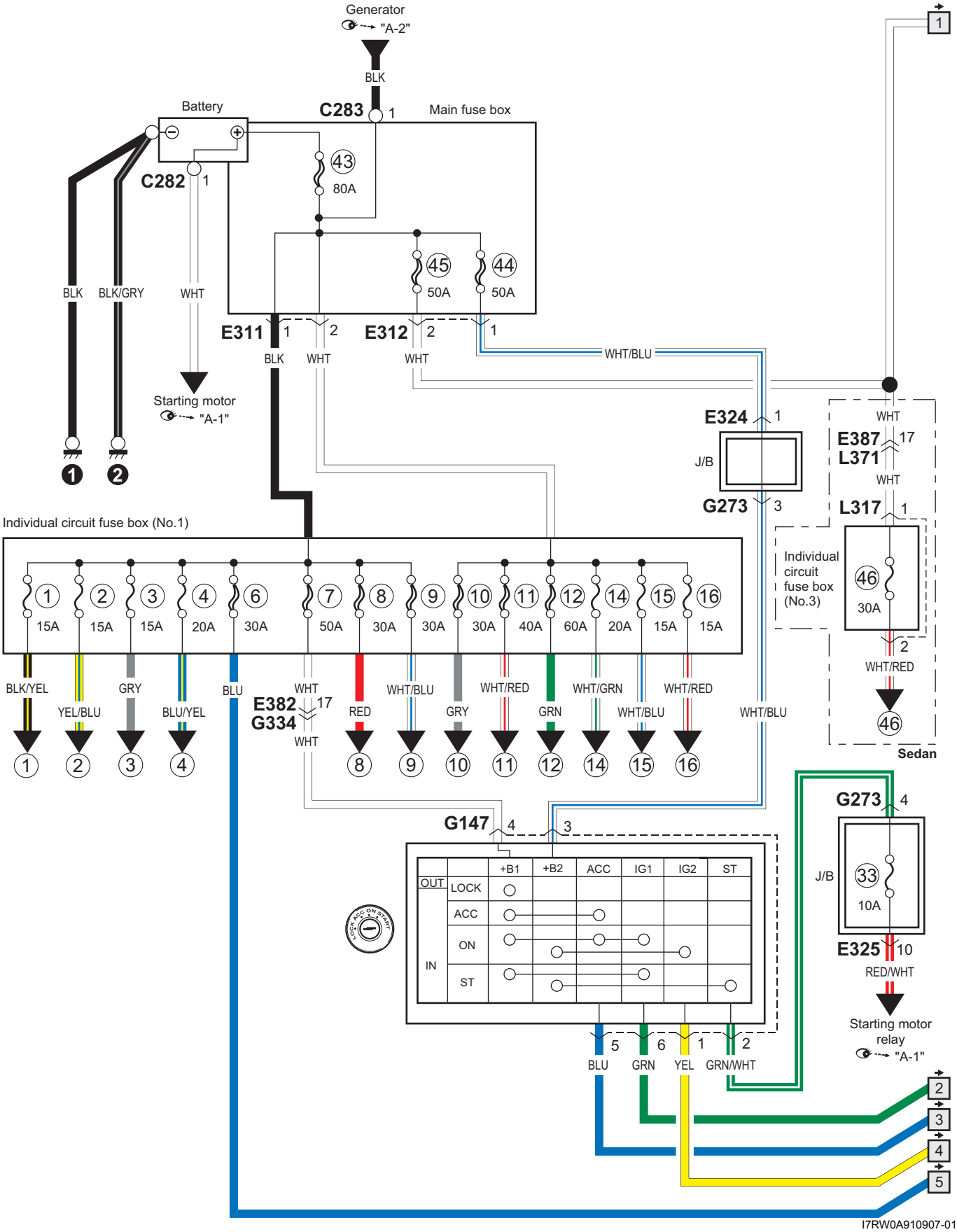

I7RW0A910907-01

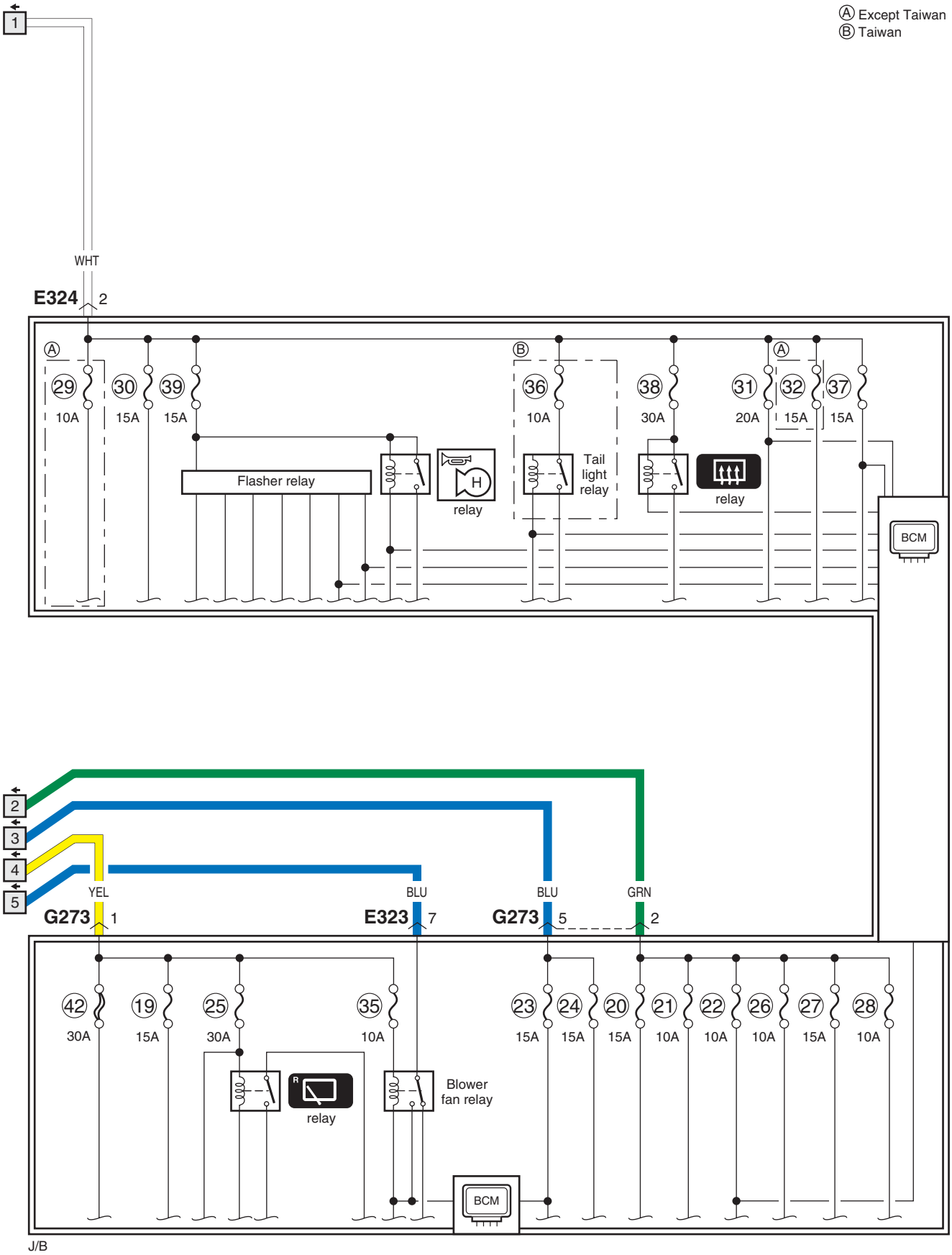

I6RW0C910920-04

Fuses and the Protected Parts

S7RW0A910D002

The chart below describes what parts each fuse protects.

Fuses in Main Fuse Box

S7RW0A910D003

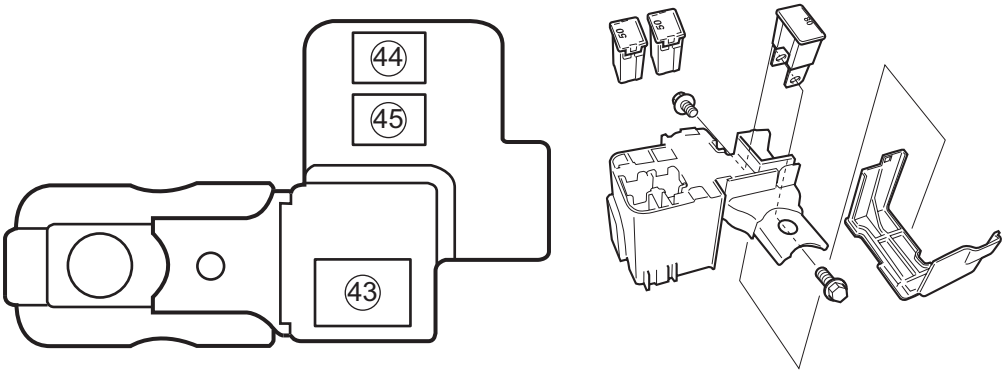

I7RW0A910908-01

No.	Fuse	Protected circuit
43	80 A	All electric circuit
		Battery
		Generator
44	50 A	J/B
45	50 A	J/B

Individual Circuit Fuse Box No. 1

S7RW0A910D004

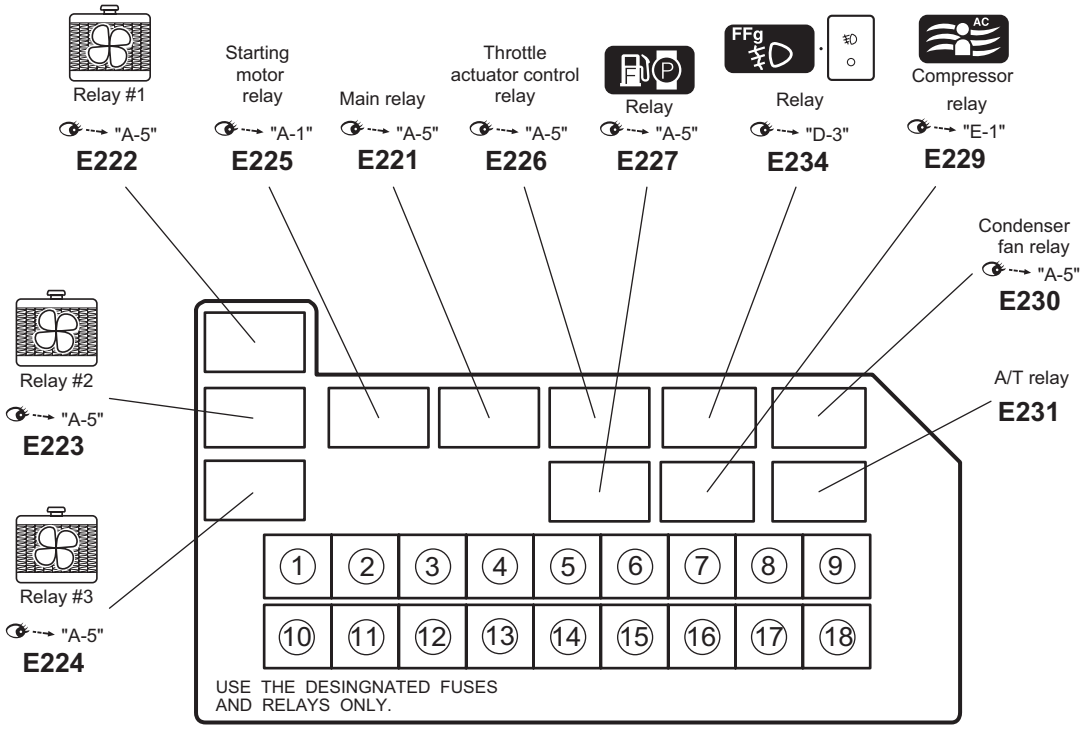

I7RW0A910963-01

No.	Fuse	Description on the cover	Protected circuit
①	15 A	FI	Main relay
②	15 A	AT	A/T relay
③	15 A	THR MOT	Throttle actuator control relay
④	20 A	A/C	A/C compressor relay
			Condenser fan relay
⑤	BLANK	BLANK	BLANK
⑥	30 A	BLW	J/B
⑦	50 A	IGN	IG switch
⑧	30 A	ST	Starting motor relay
⑨	30 A	ABS SOL	ABS control module
⑩	30 A	RDTR	Radiator fan relay #1
			Radiator fan relay #2
			Radiator fan relay #3
⑪	40 A	ABS MOT	ABS control module
⑫	60 A	P/S	Power steering control module
⑬	BLANK	BLANK	BLANK
⑭	20 A	FR FOG	Front fog light relay
⑮	15 A	H/L L	Headlight (L)
			Headlight LO relay (L)
			Headlight HI relay (L)
⑯	15 A	H/L R	Headlight (R)
			Headlight LO relay (R)
			Headlight HI relay (R)
⑰	BLANK	BLANK	BLANK
⑱	BLANK	BLANK	BLANK

Individual Circuit Fuse Box No. 2 (In J/B (Except Taiwan))

S7RW0A910D005

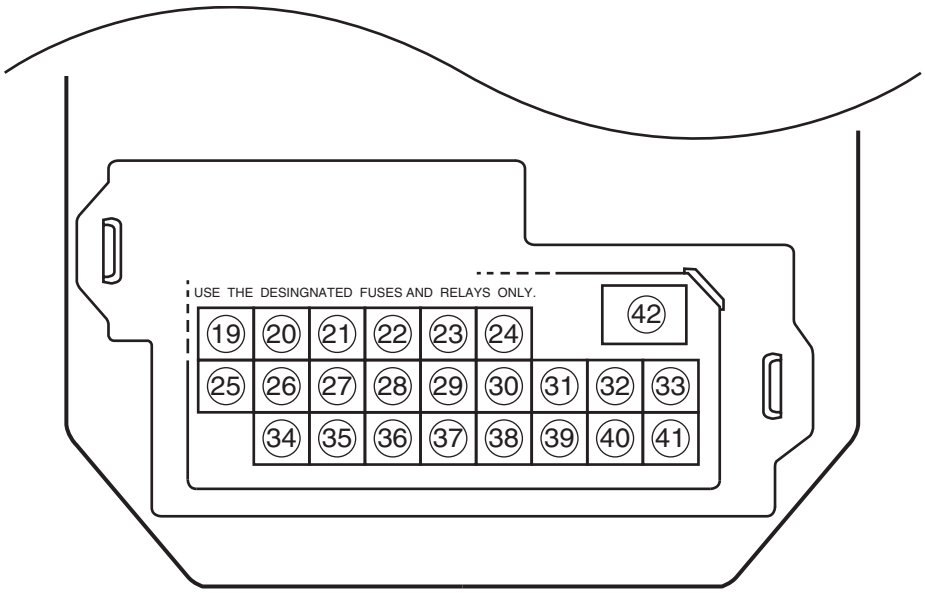

I7RW01910912-02

No.	Fuse	Description on the cover	Protected circuit
⑲	15 A	RR WIP	Rear wiper motor
			Rear washer motor
⑳	15 A	IG COIL	A/F sensor
			Current sensor
			ECM
			Fuel pump relay
			Generator
			Heated oxygen sensor #1
			Heated oxygen sensor #2
			VSS
			ICM
			IG coil #1
			IG coil #2
			IG coil #3
			IG coil #4
㉑	10 A	BACK	Back-up light switch
			Air intake control actuator
			HVAC control unit
			HVAC control module
			4WD control module
			KLS control module
			Transaxle range sensor
			Headlight beam leveling switch
			Headlight beam leveling actuator (R)
			Headlight beam leveling actuator (L)
㉒	10 A	MTR	COMB meter
			Flasher relay
㉓	15 A	ACC	BCM
			Power mirror switch
			ACC socket
㉔	15 A	ACC 2	Rear ACC socket
			Audio
			Multi information display
			KLS control module

No.	Fuse	Description on the cover	Protected circuit
㉕	30 A	WIP	COMB switch
			Windshield washer motor
			Windshield wiper motor
			Rear wiper relay
			DRL controller
㉖	10 A	IG1 SIG	Power steering control module
			A/T relay
			Brake light switch
㉗	15 A	A/B	A/B SDM
㉘	10 A	ABS	ABS control module
			G sensor
㉙	10 A	TAIL	COMB switch
			DRL controller
㉚	15 A	STOP	Brake light switch
㉛	20 A	D/L	BCM
㉜	15 A	4WD	4WD control module
㉝	10 A	ST SIG	Starting motor relay
㉞	15 A	S/H	Seat heater switch (Driver side)
			Seat heater switch (Passenger side)
㉟	10 A	IG2 SIG	Blower motor relay
㊱	15 A	RR FOG	COMB switch
㊲	15 A	DOME	Audio
			BCM
			COMB meter
			DLC
			ECM
			Interior light
			ICM
			TCM
			Rear interior light
			Luggage compartment light
			Main switch (Key switch)
			Multi information display
			KLS control module
㊳	30 A	RR DEF	Rear defogger relay
			Mirror motor (R)
			Mirror motor (L)
㊴	15 A	HORN-HAZ	Horn relay
			Flasher relay
㊵	BLANK	BLANK	BLANK
㊶	BLANK	BLANK	BLANK
㊷	30 A	P/W	Power window main switch
			Front power window sub switch
			Rear power window sub switch (R)
			Rear power window sub switch (L)

Individual Circuit Fuse Box No. 2 (In J/B (Taiwan))

S7RW0A910D006

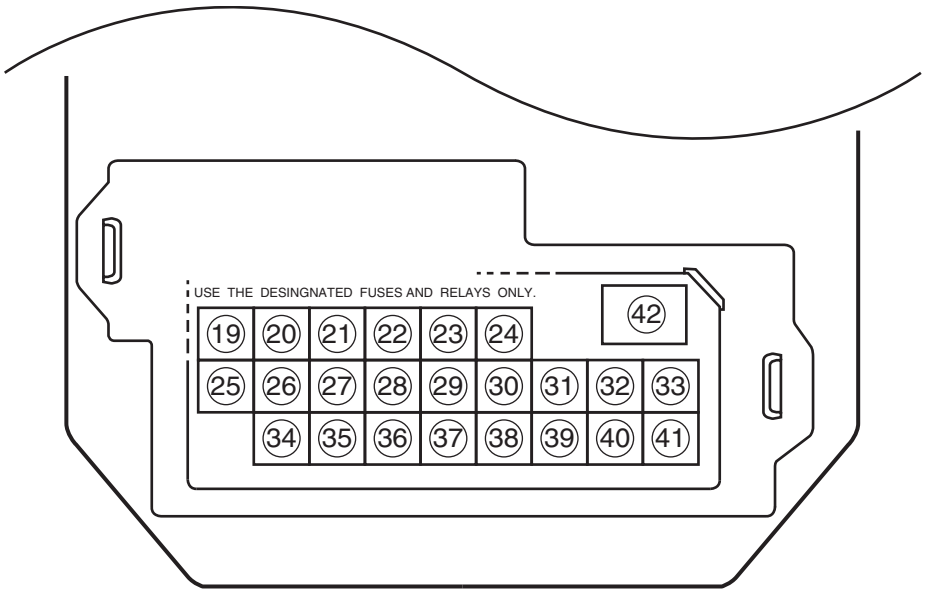

I7RW01910912-02

No.	Fuse	Description on the cover	Protected circuit
⑲	15 A	RR WIP	Rear wiper motor
			Rear washer motor
⑳	15 A	IG COIL	BCM
			A/F
			ECM
			Fuel pump relay
			Generator
			Heated oxygen sensor #1
			Heated oxygen sensor #2
			VSS
			ICM
			IG coil #1
			IG coil #2
			IG coil #3
			IG coil #4
㉑	10 A	BACK	Back-up light switch
			Air intake control actuator
			HVAC control unit
			HVAC control module
			KLS control module
			Transaxle range sensor
㉒	10 A	MTR	COMB meter
			Flasher relay
㉓	15 A	ACC	BCM
			Power mirror switch
			ACC socket
㉔	15 A	ACC 2	Rear ACC socket
			Audio
			Multi information display
			KLS control module
㉕	30 A	WIP	COMB switch
			Windshield washer motor
			Windshield wiper motor
			Rear wiper relay
㉖	10 A	IG1 SIG	Power steering control module
			A/T relay
㉗	15 A	A/B	A/B SDM

No.	Fuse	Description on the cover	Protected circuit
㉘	10 A	ABS	ABS control module
			G sensor
㉙	BLANK	BLANK	BLANK
㉚	15 A	STOP	Brake light switch
㉛	20 A	D/L	BCM
㉜	BLANK	BLANK	BLANK
㉝	10 A	ST SIG	Starting motor relay
㉞	BLANK	BLANK	BLANK
㉟	10 A	IG2 SIG	Blower motor relay
㊱	10 A	TAIL	Tail light relay
㊲	15 A	DOME	Audio
			BCM
			COMB meter
			DLC
			ECM
			Interior light
			ICM
			TCM
			Rear interior light
			Luggage compartment light
			Main switch (Key switch)
			Multi information display
			KLS control module
㊳	30 A	RR DEF	Rear defogger relay
			Mirror motor (R)
			Mirror motor (L)
㊴	15 A	HORN-HAZ	Horn relay
			Flasher relay
㊵	BLANK	BLANK	BLANK
㊶	BLANK	BLANK	BLANK
㊷	30 A	P/W	Power window main switch
			Front power window sub switch
			Rear power window sub switch (R)
			Rear power window sub switch (L)

Individual Circuit Fuse Box No.3 (Sedan)

S7RW0A910D012

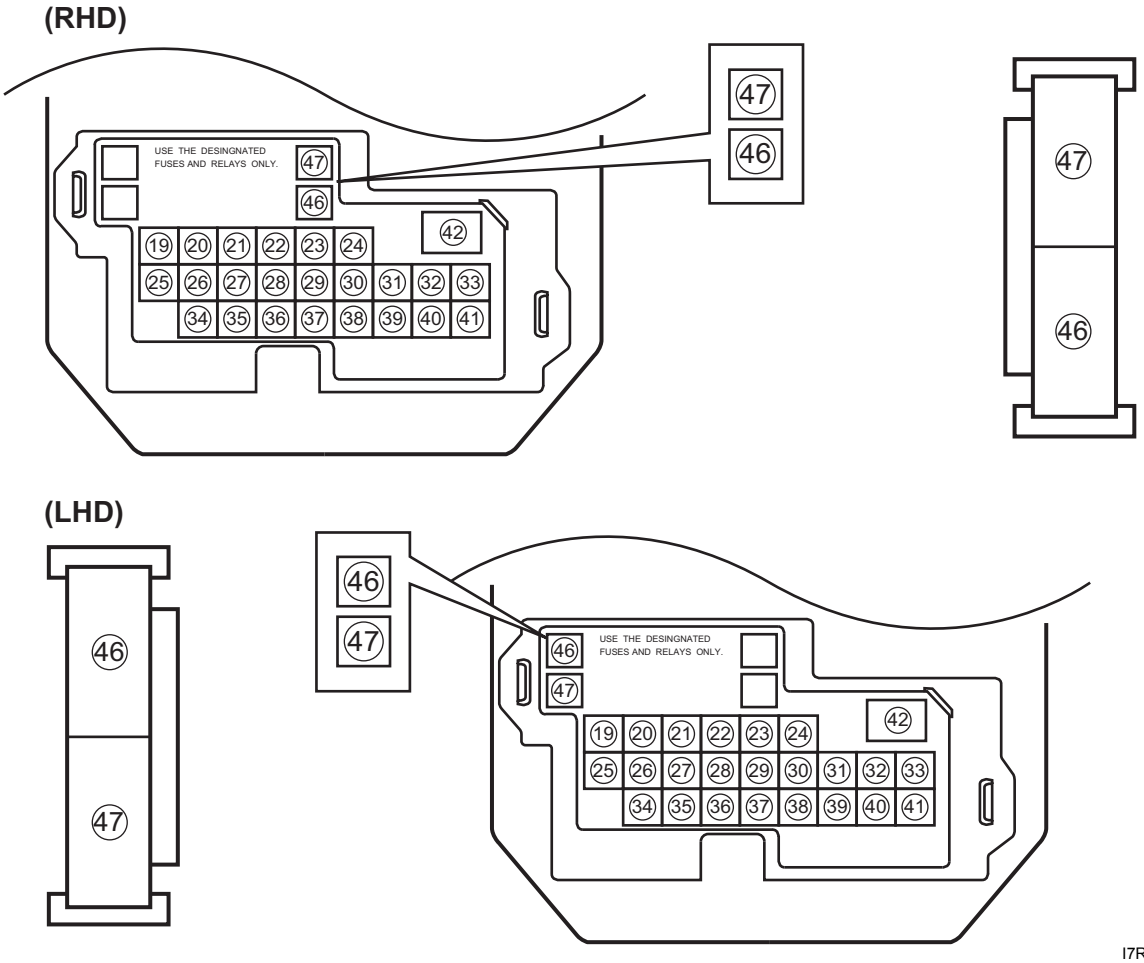

I7RW0A910909-02

No.	Fuse	Description on the cover	Protected circuit
46	30 A	RR DEF	Rear defogger relay
47	BLANK	BLANK	BLANK

Junction Block (J/B) Connector / Fuse Layout

S7RW0A910D007

BCM side

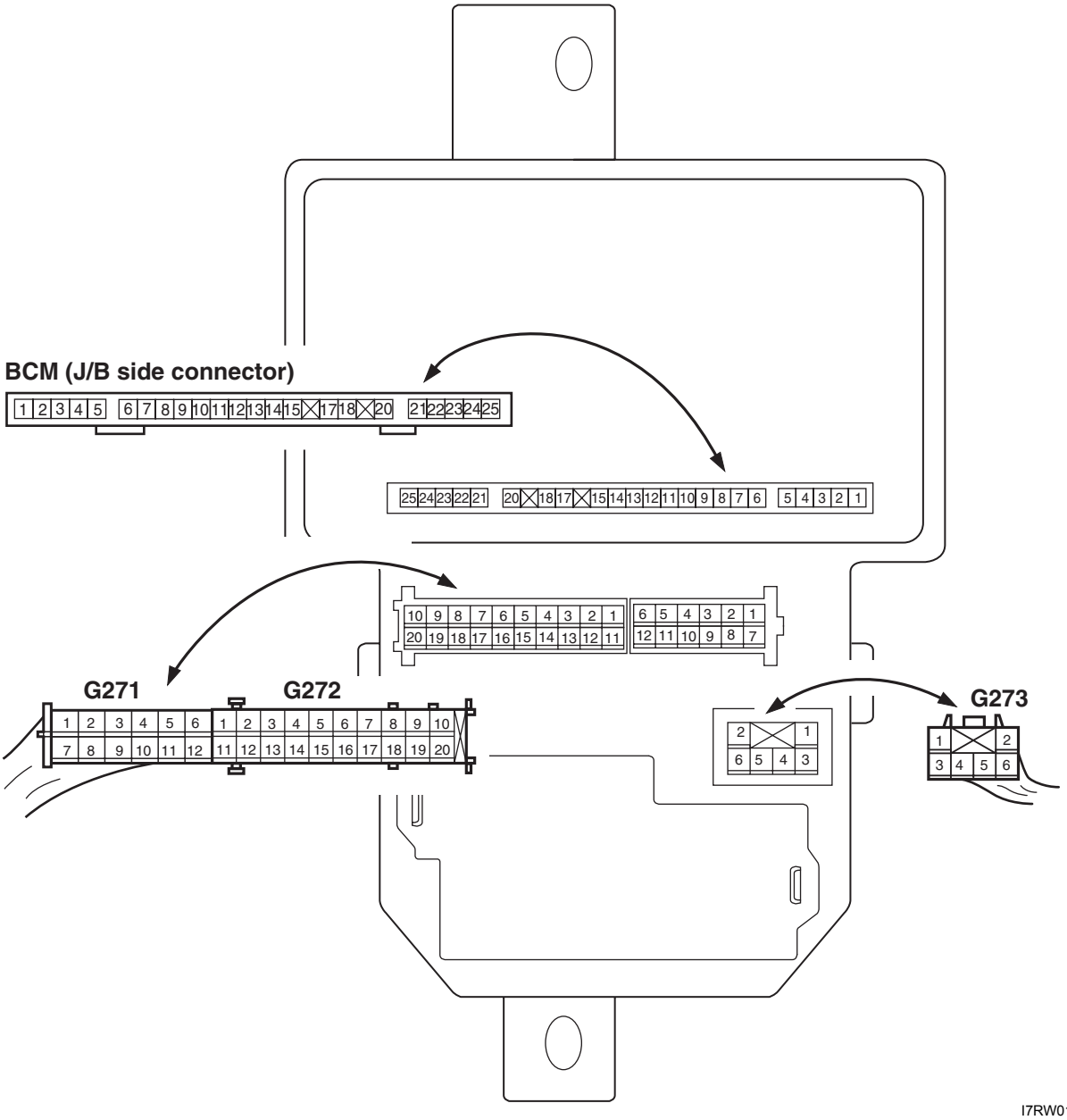

I7RW01910913-02

Relay side

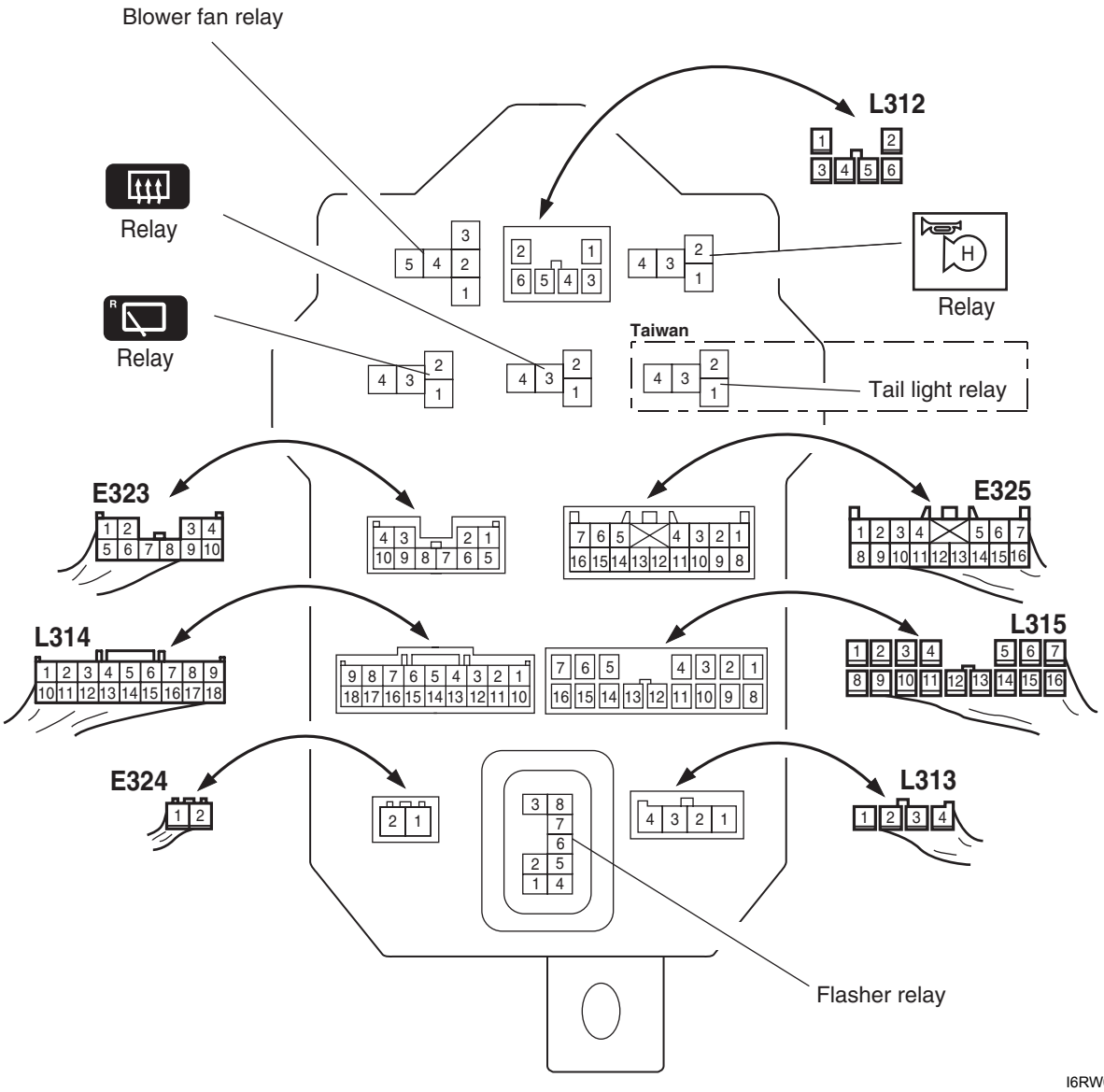

I6RW0C910921-02

Junction Block Inner Circuit (Overview (Except Taiwan))

S7RW0A910D008

Abbreviations

Abbreviation	Full term	Abbreviation	Full term
AS	Assistant (Front passenger)	LP	Lamp
CTR	Center	O/H	Over head
DR	Driver	R/B	Relay box
F-L	Front L	R-L	Rear L
F-R	Front R	R-R	Rear R
FR	Front	RR	Rear
INP	Instrument panel	S/H	Seat heater
LEV	(Headlight) leveling		

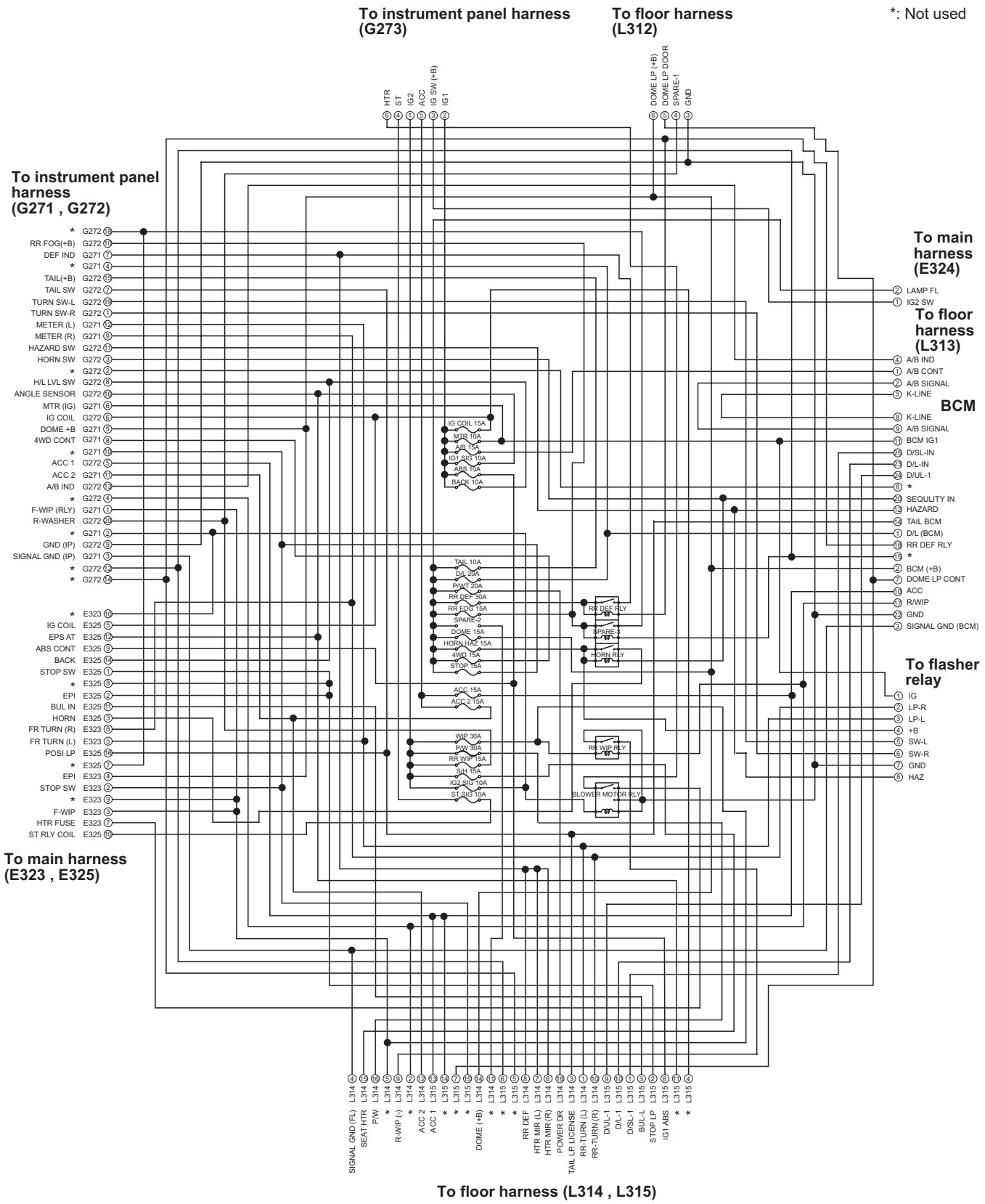

I7RW0A910964-01

Junction Block Inner Circuit (Detail (Except Taiwan))

S7RW0A910D009

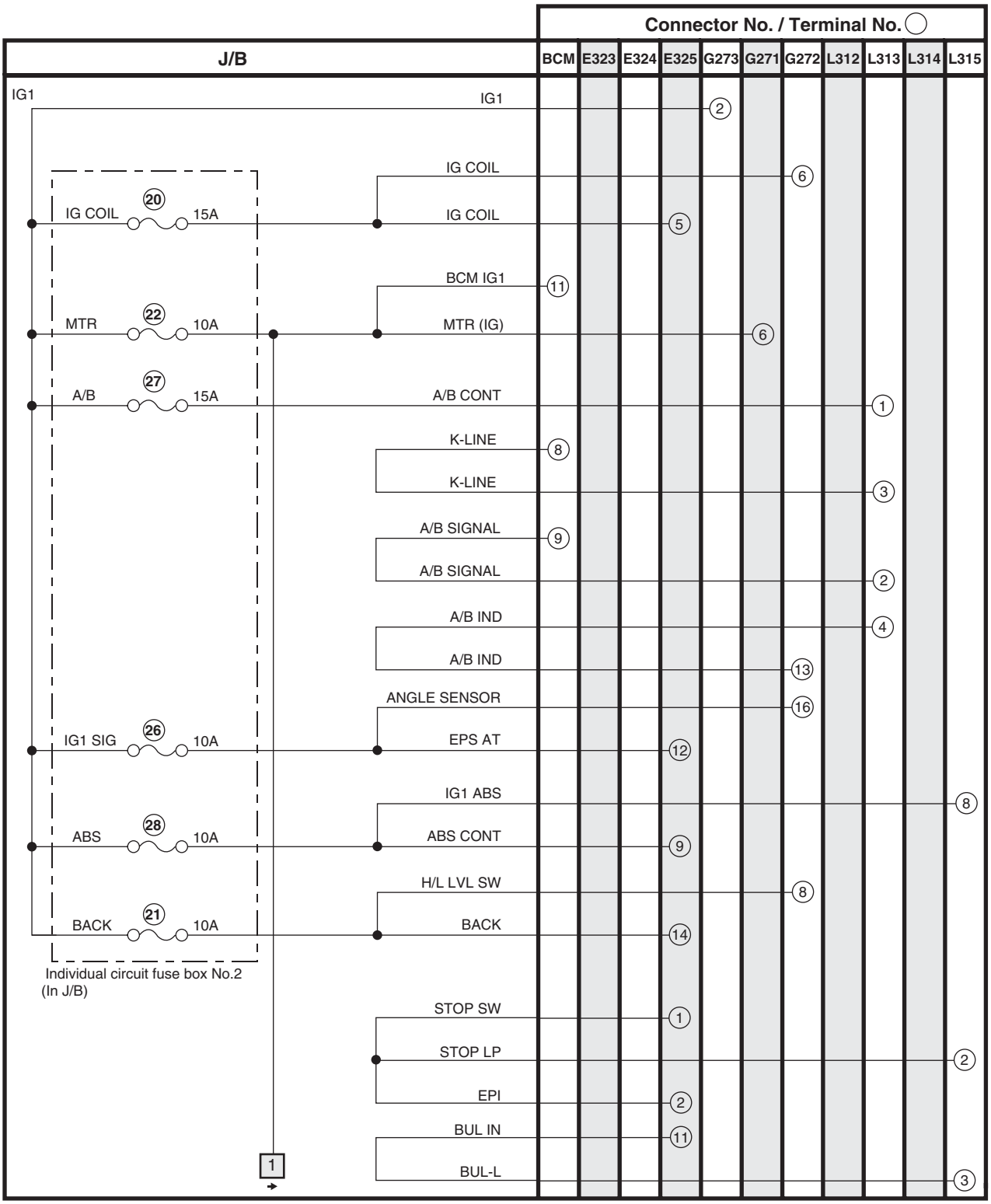

(Continued)

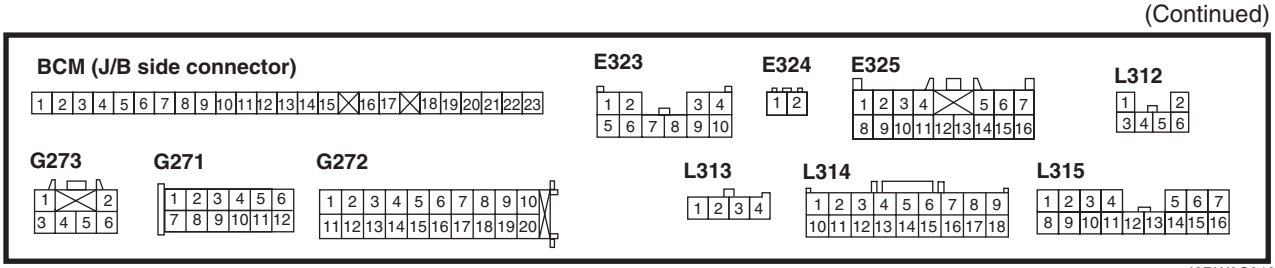

I6RW0C910923-01

(Continued)

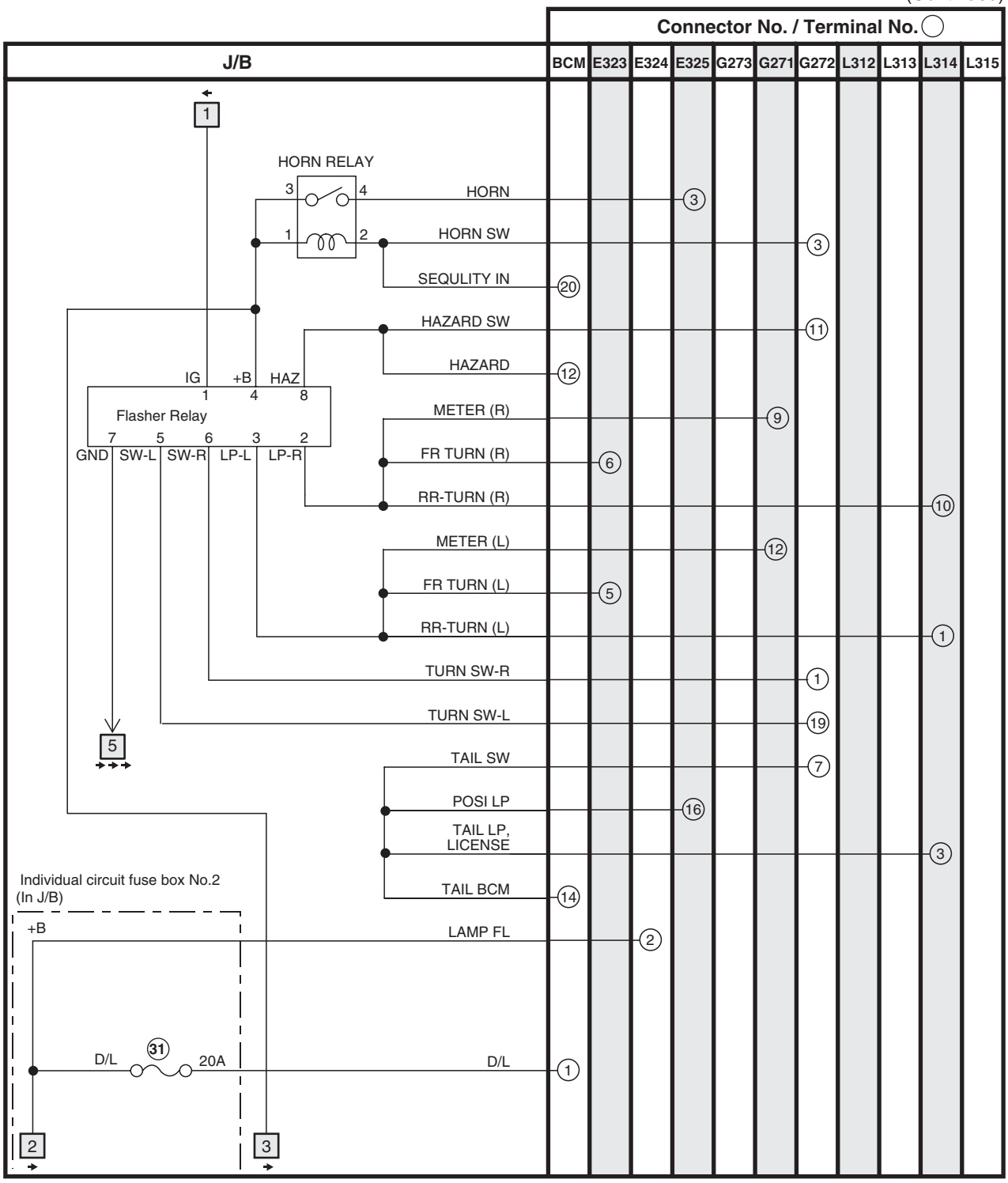

(Continued)

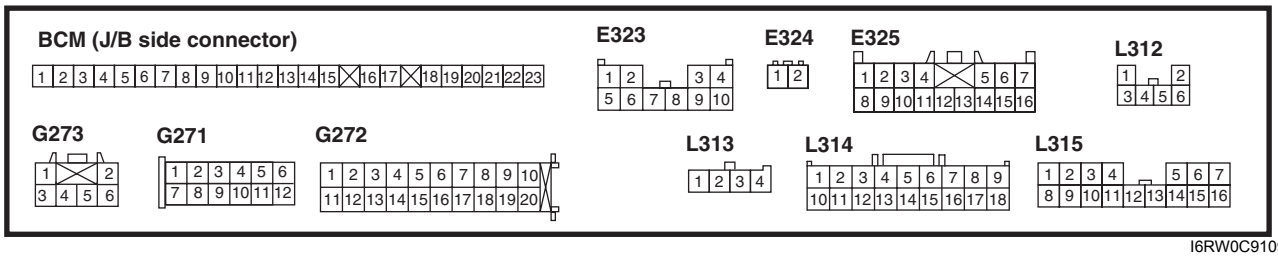

I6RW0C910924-02

(Continued)

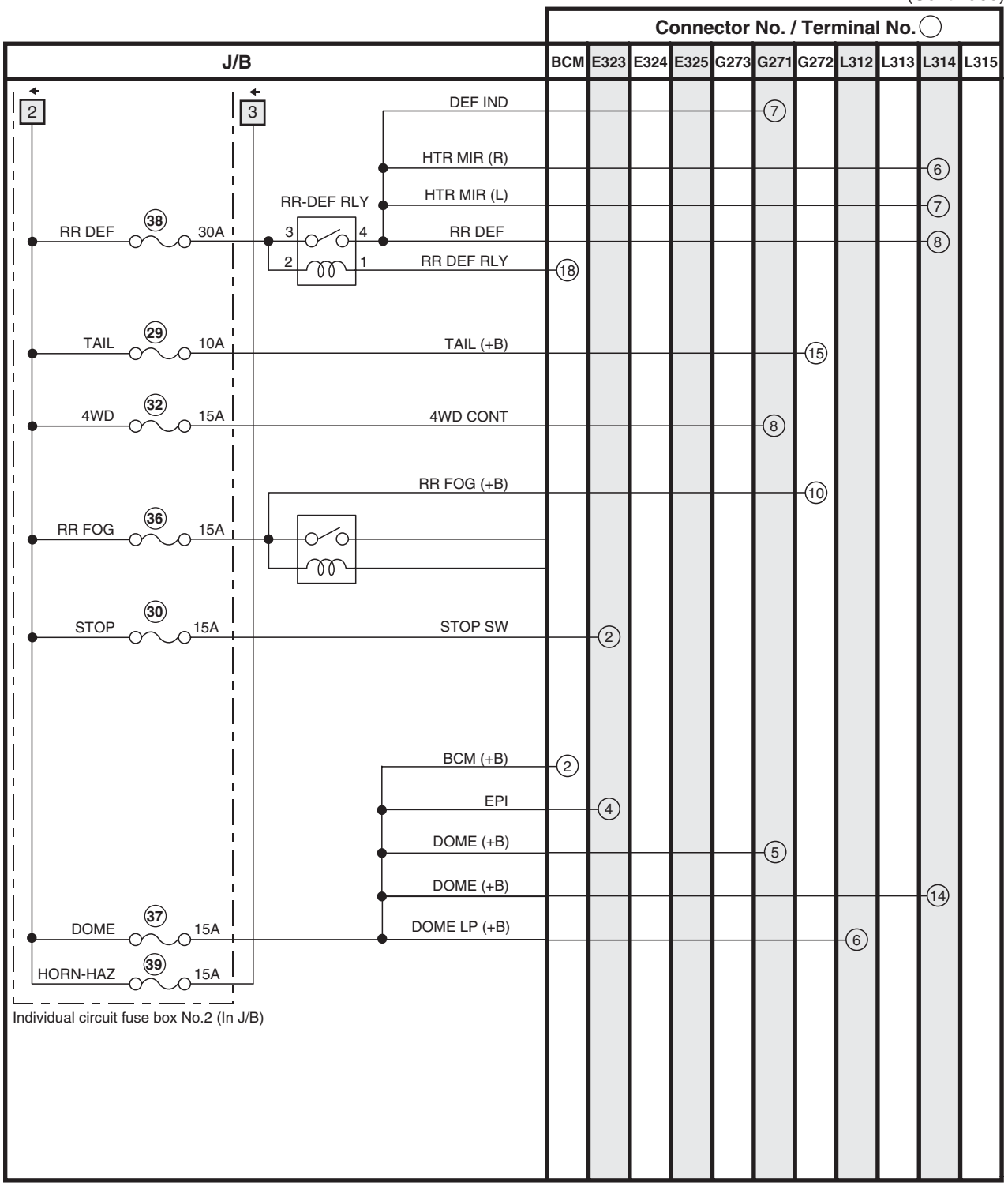

(Continued)

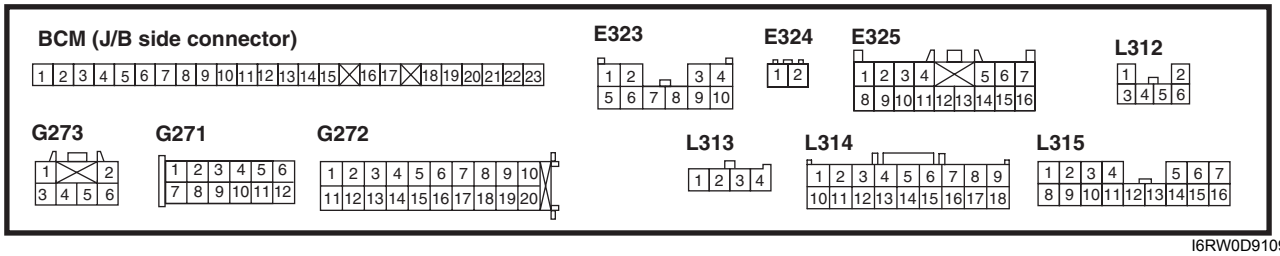

I6RW0D910905-01

(Continued)

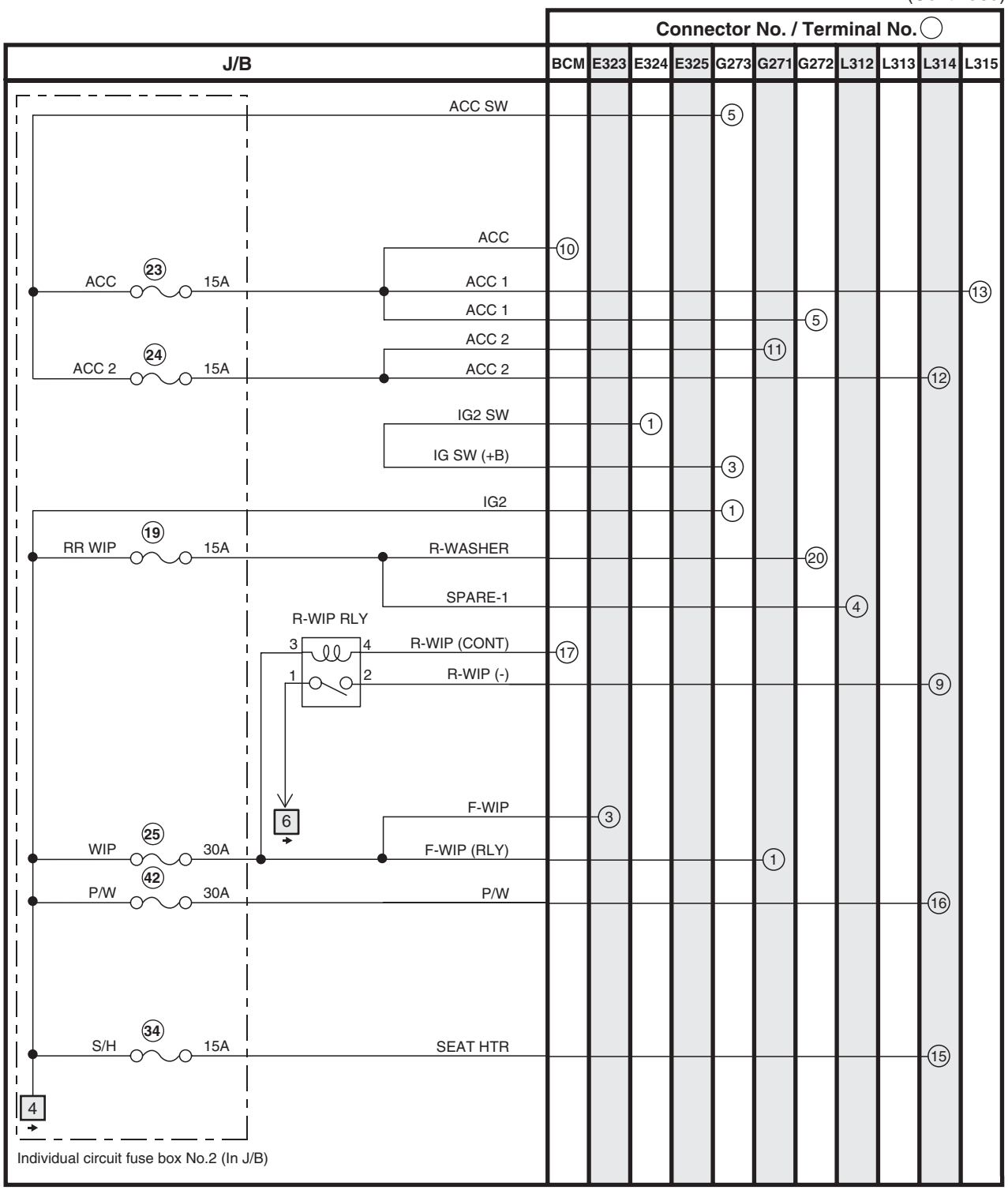

(Continued)

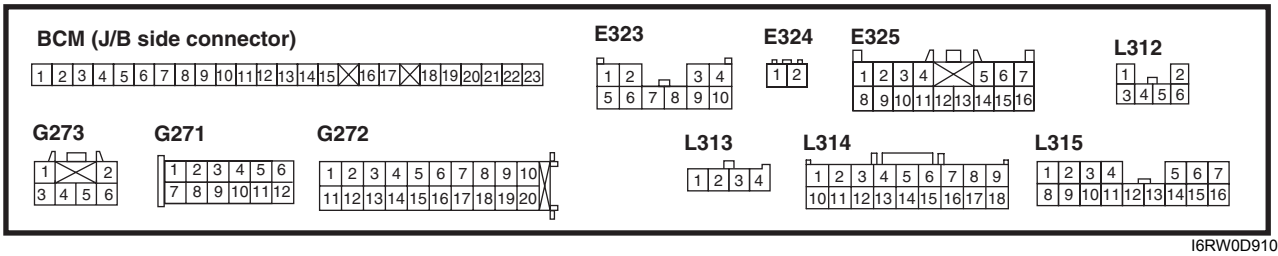

I6RW0D910906-01

(Continued)

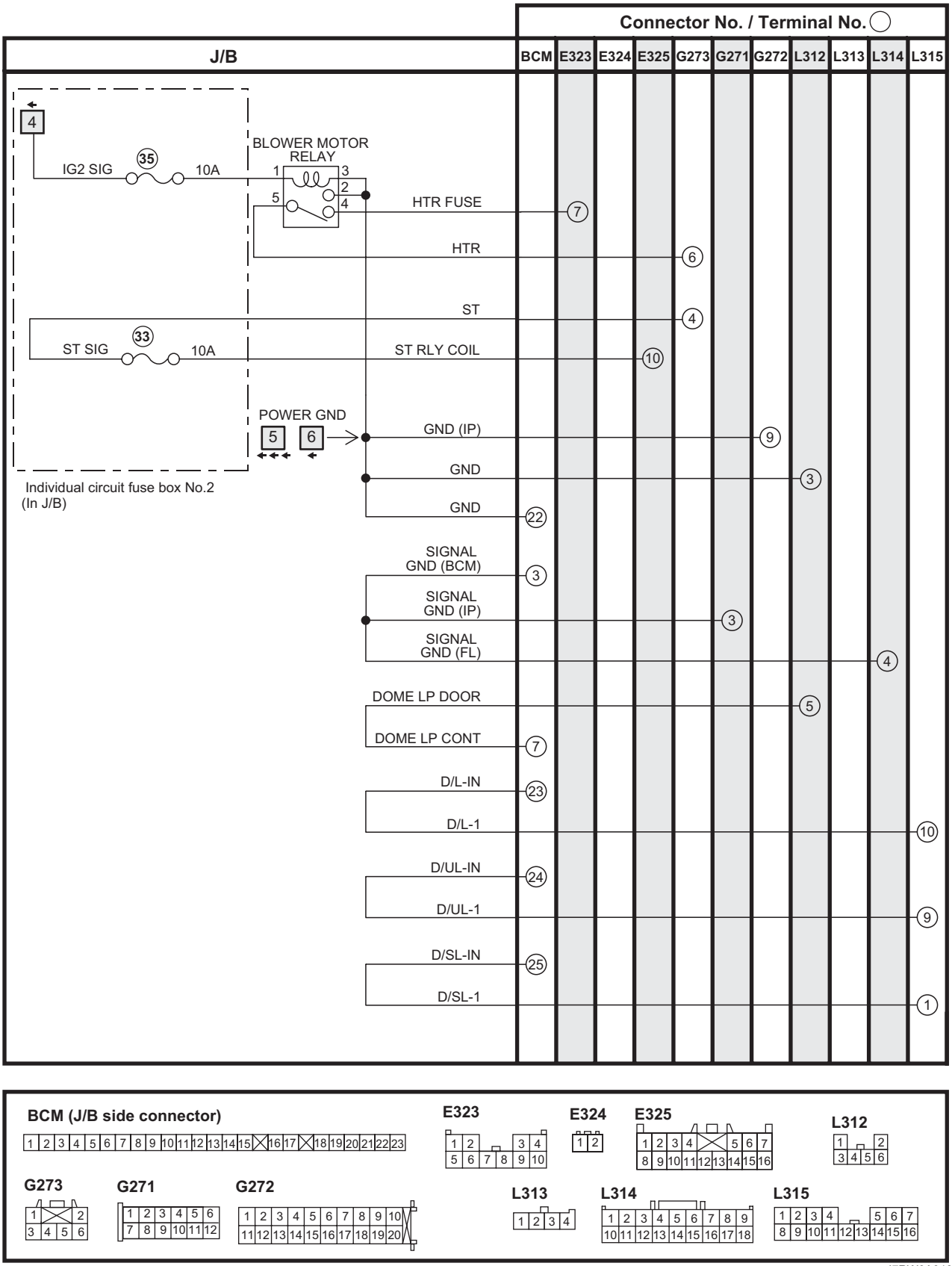

I7RW0A910965-01

Junction Block Inner Circuit (Overview (Taiwan))

S7RW0A910D010

Abbreviations

Abbreviation	Full term	Abbreviation	Full term
AS	Assistant (Front passenger)	LP	Lamp
CTR	Center	O/H	Over head
DR	Driver	R/B	Relay box
F-L	Front L	R-L	Rear L
F-R	Front R	R-R	Rear R
FR	Front	RR	Rear
INP	Instrument panel	S/H	Seat heater
LEV	(Headlight) leveling		

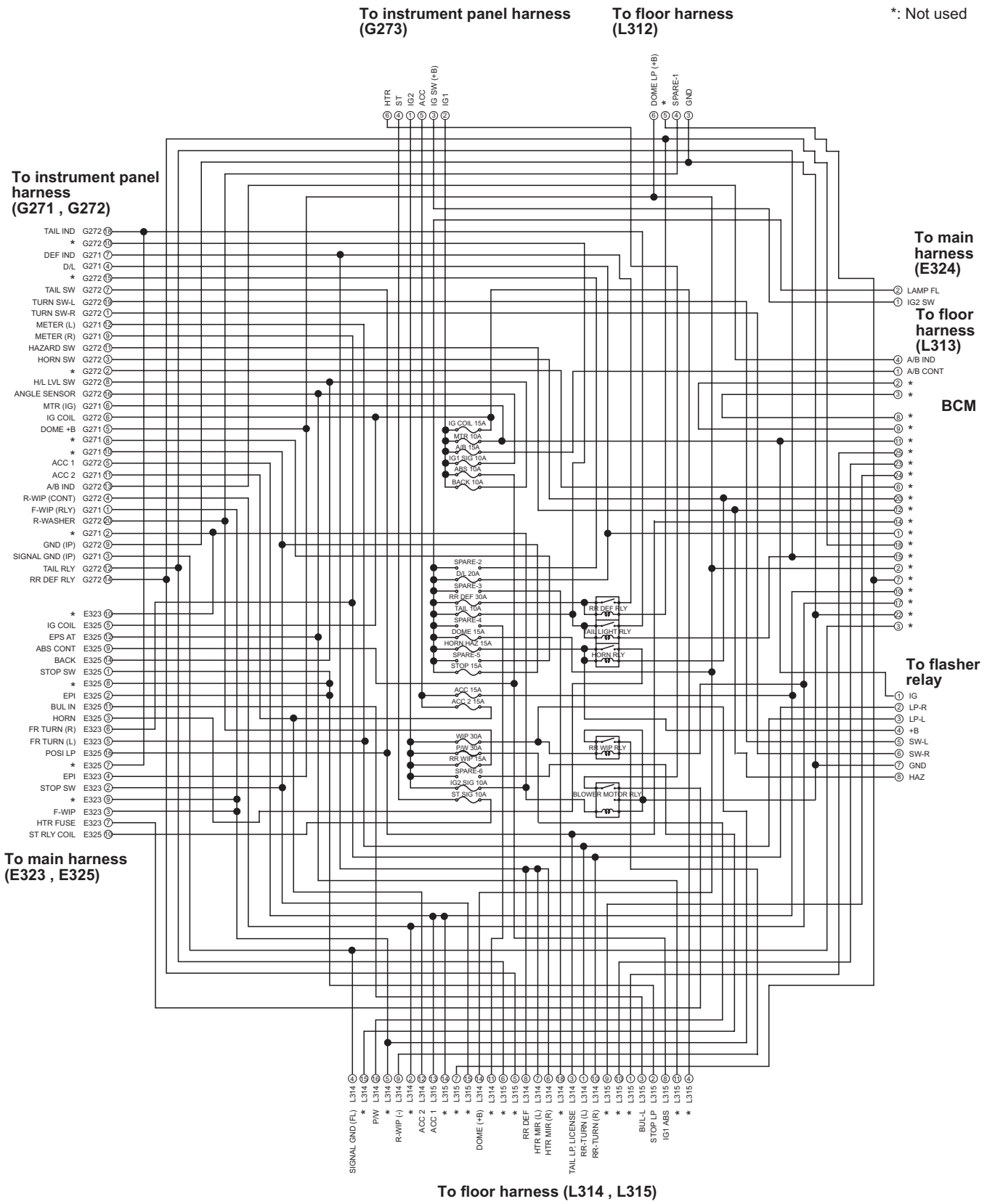

I7RW0A910966-01

Junction Block Inner Circuit (Detail (Taiwan))

S7RW0A910D011

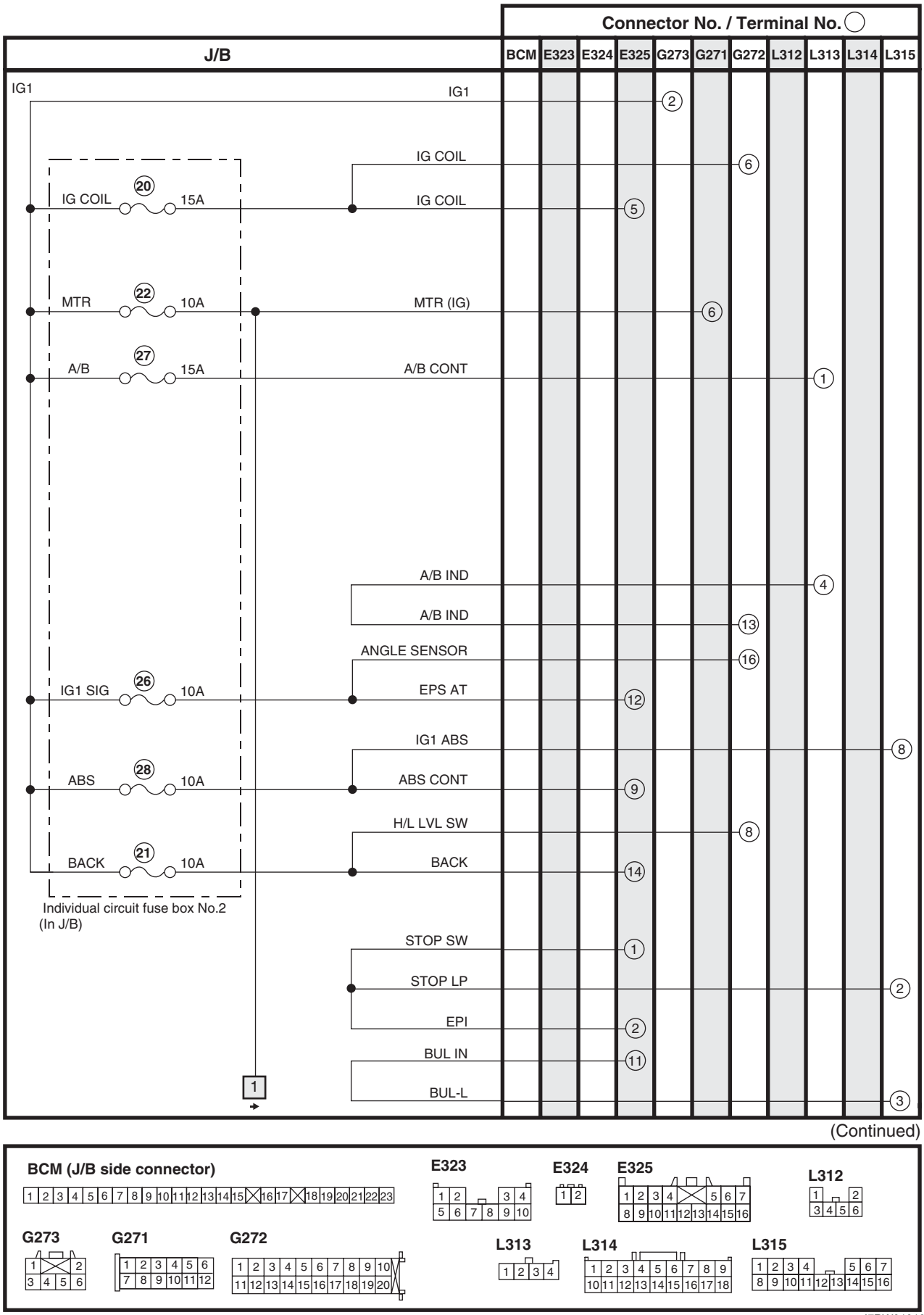

(Continued)

I7RW01910916-04

(Continued)

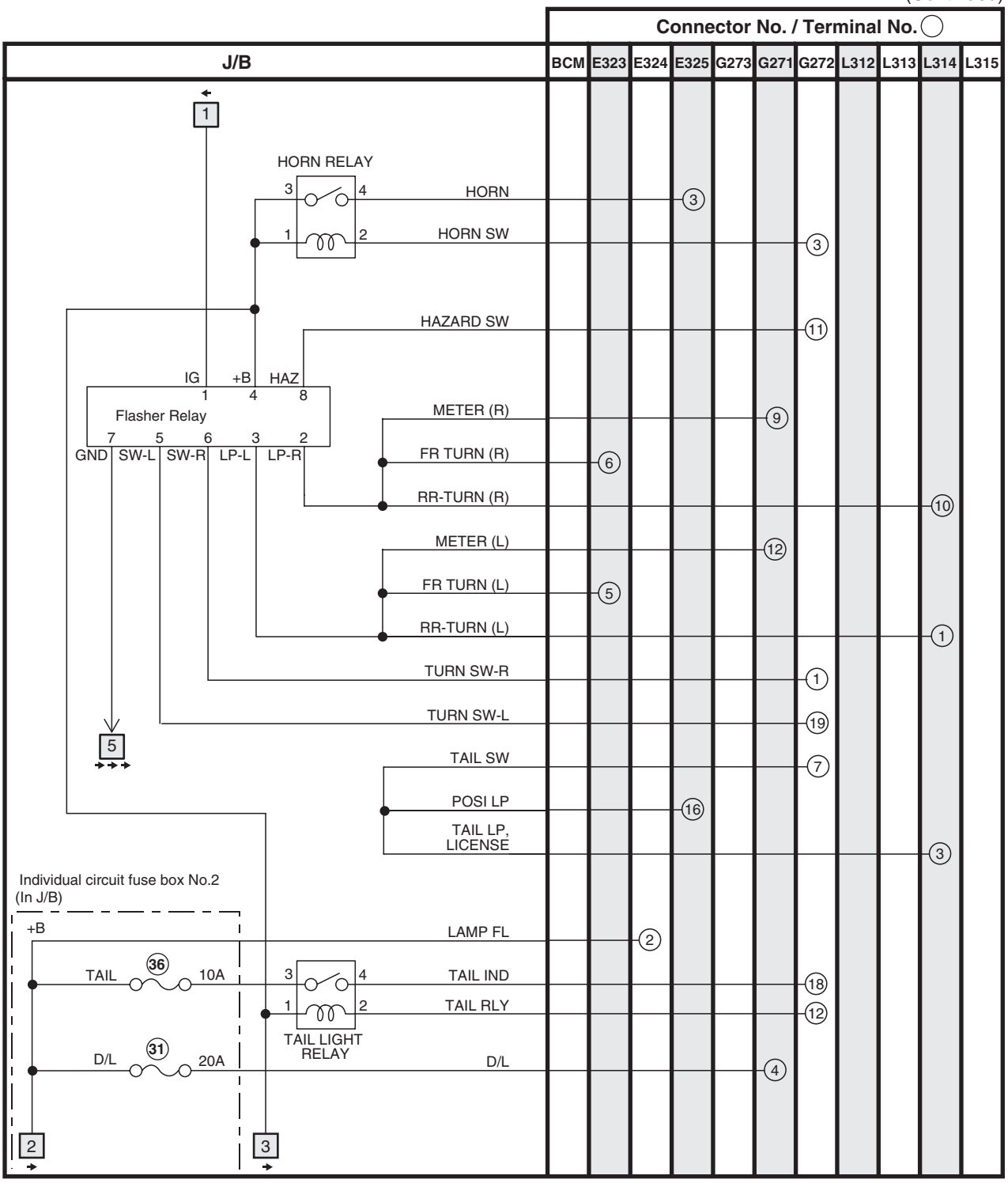

(Continued)

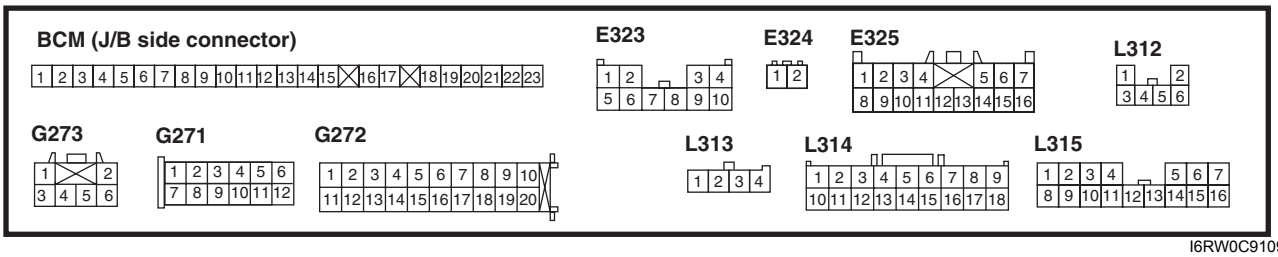

I6RW0C910929-01

(Continued)

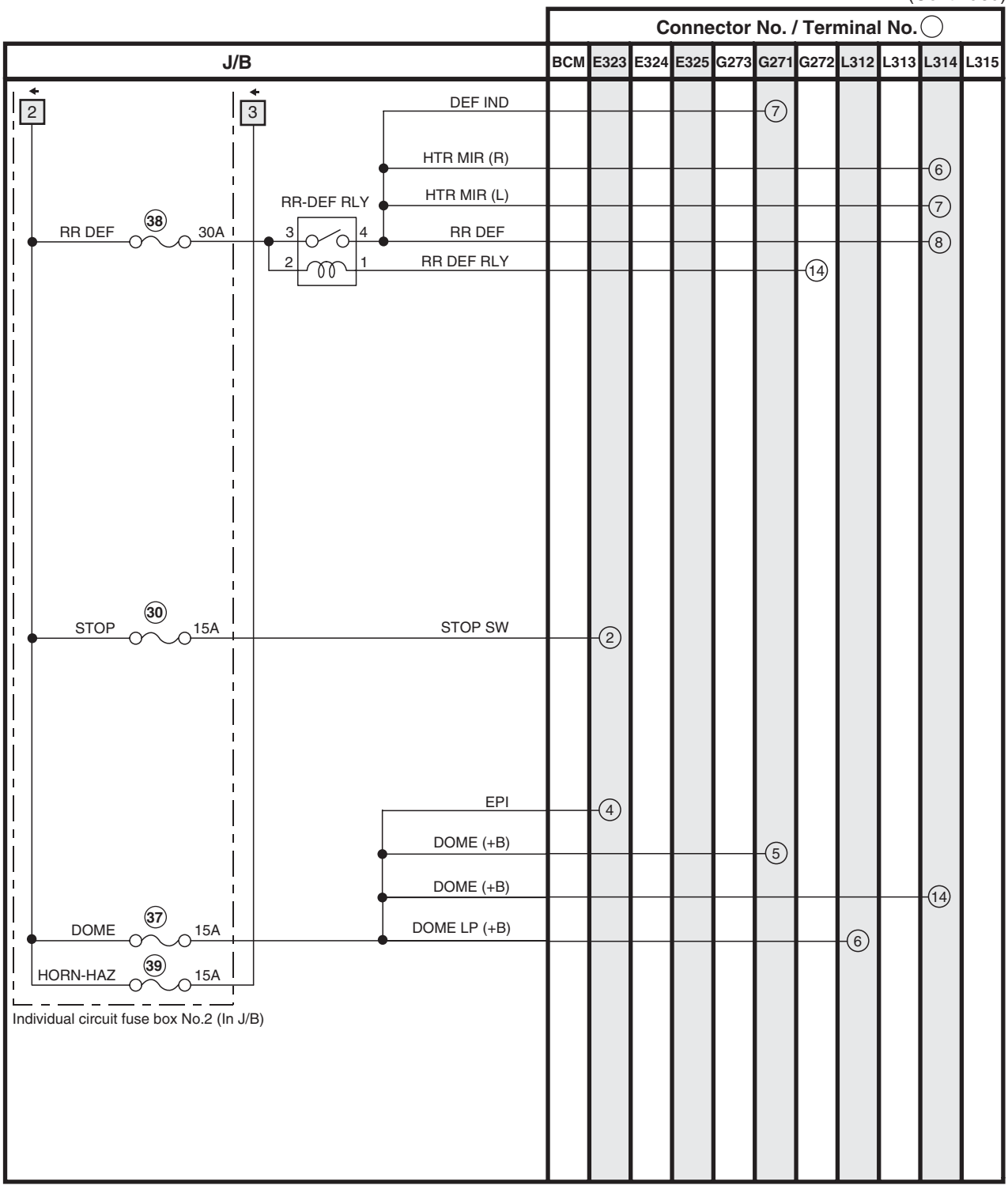

(Continued)

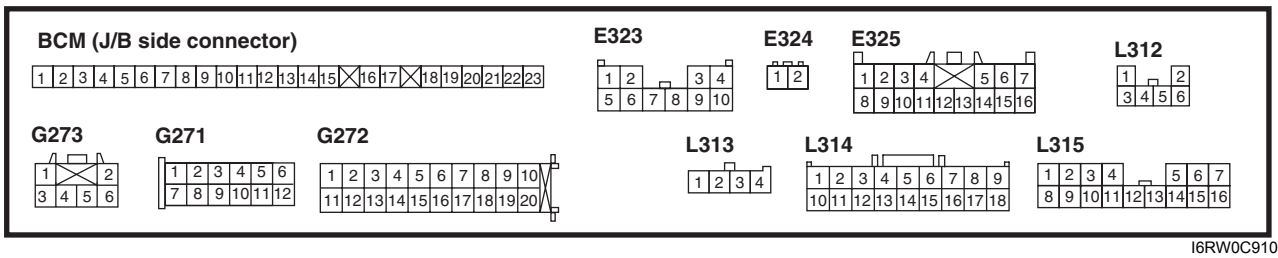

I6RW0C910930-02

(Continued)

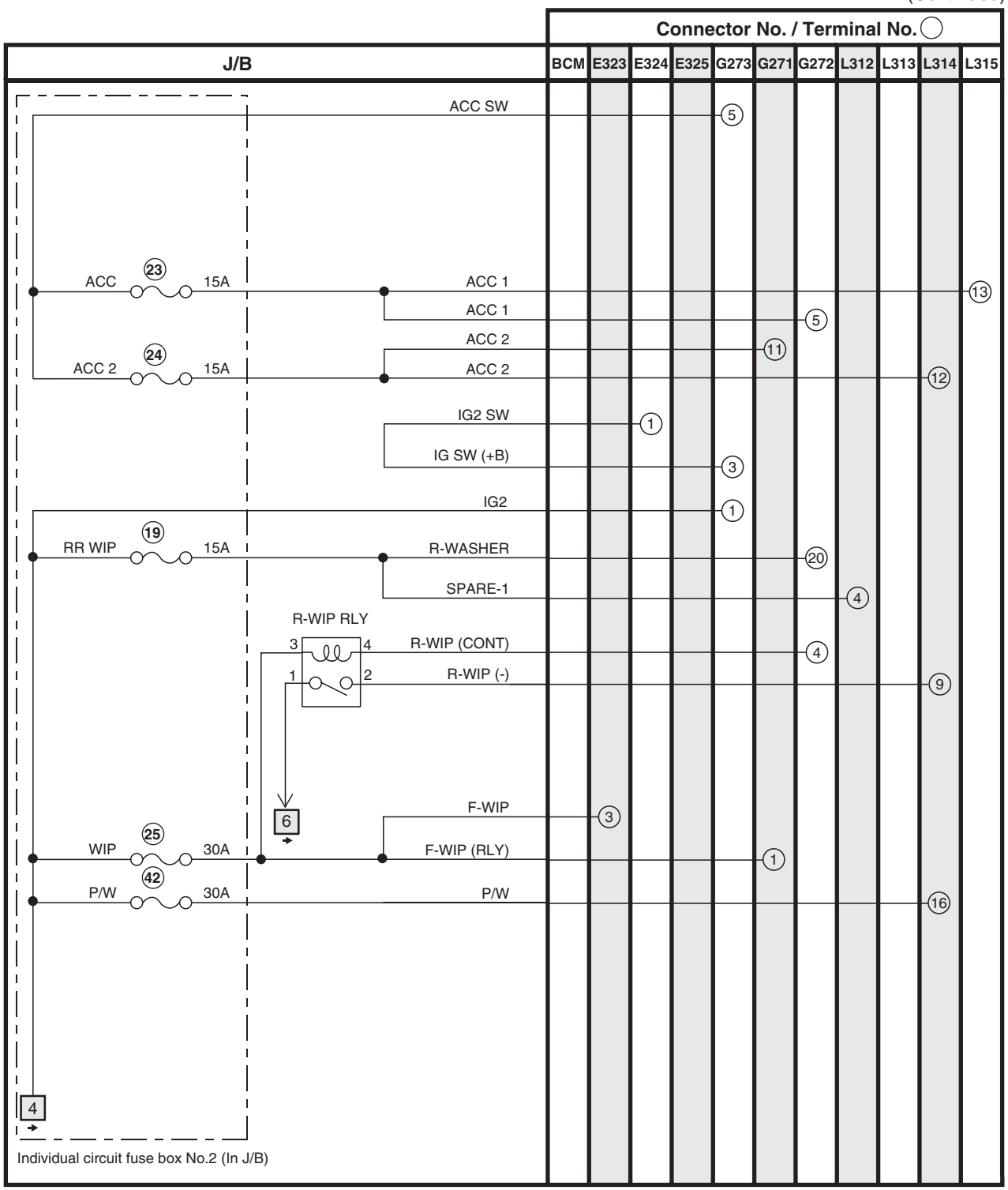

(Continued)

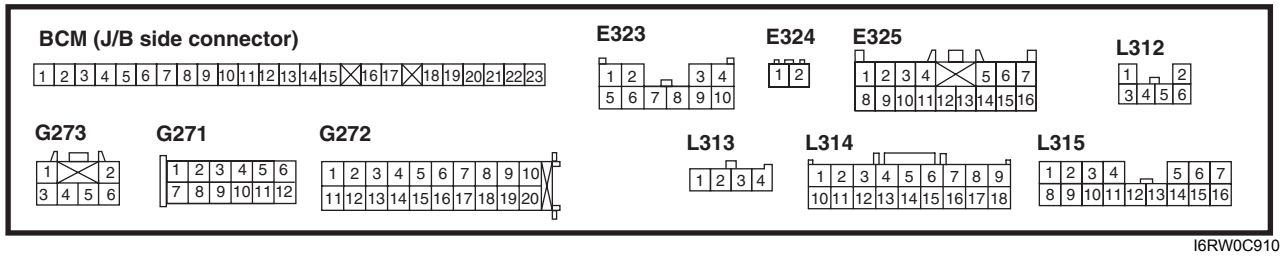

I6RW0C910931-01

(Continued)

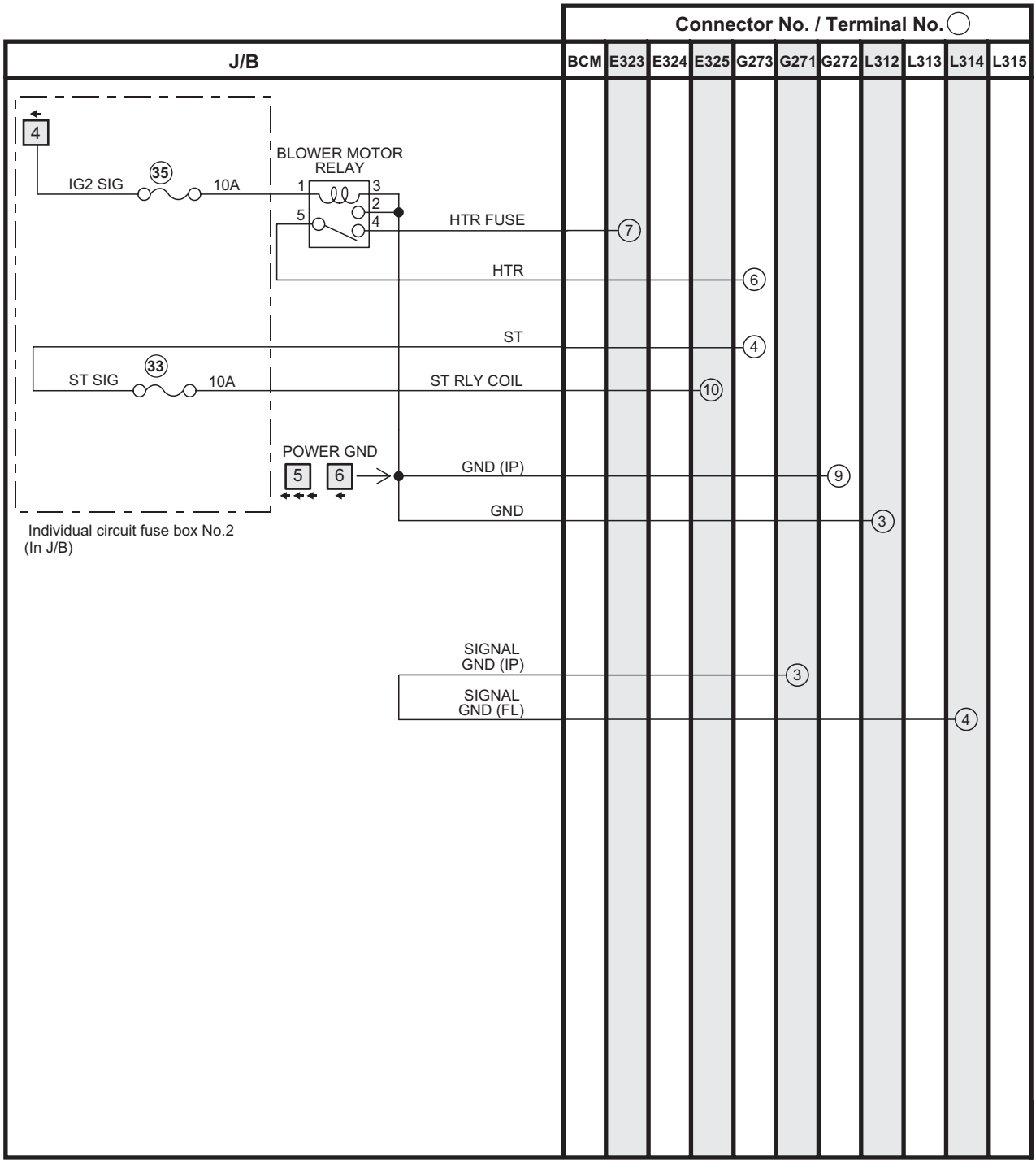

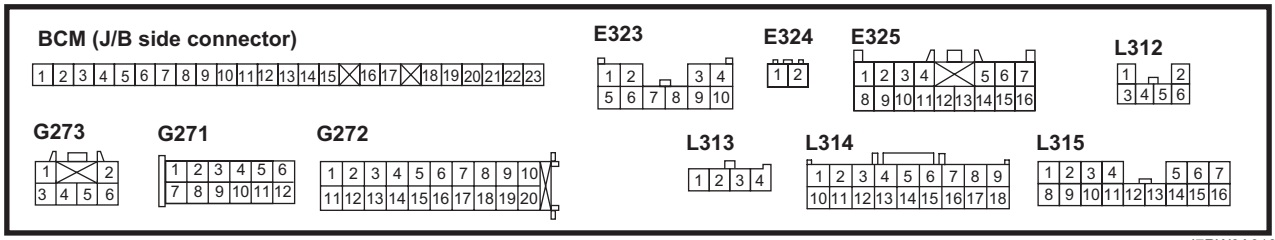

I7RW0A910967-01

System Circuit Diagram

System Circuit Diagram

S7RW0A910E001

Refer to “A-1 Cranking System Circuit Diagram”.
Refer to “A-2 Charging System Circuit Diagram”.
Refer to “A-3 Ignition System Circuit Diagram (M15A engine, M16A engine)”.
Refer to “A-3 Ignition System Circuit Diagram (J20A engine)”.
Refer to “A-4 Cooling System Circuit Diagram (M15A engine, M16A engine)”.
Refer to “A-4 Cooling System Circuit Diagram (J20A engine)”.
Refer to “A-5 Engine and A/C Control System Circuit Diagram (M15A engine)”.
Refer to “A-5 Engine and A/C Control System Circuit Diagram (M16A engine)”.
Refer to “A-5 Engine and A/C Control System Circuit Diagram (J20A engine)”.
Refer to “A-6 A/T Control System Circuit Diagram”.
Refer to “A-7 Immobilizer System Circuit Diagram”.
Refer to “A-8 Body Control System Circuit Diagram (Except Taiwan)”.
Refer to “A-8 Body Control System Circuit Diagram (Taiwan)”.
Refer to “A-10 4WD Control System (Except Taiwan)”
Refer to “B-1 Windshield Wiper and Washer Circuit Diagram”.
Refer to “B-2 Rear Wiper and Washer Circuit Diagram (Except Taiwan)”.
Refer to “B-2 Rear Wiper and Washer Circuit Diagram (Taiwan)”.
Refer to “B-3 Rear Defogger Circuit Diagram (Hatchback (Except Taiwan))”.
Refer to “B-3 Rear Defogger Circuit Diagram (Hatchback (Taiwan))”.
Refer to “B-3 Rear Defogger Circuit Diagram (Sedan)”.
Refer to “B-4 Power Window Circuit Diagram”.
Refer to “B-5 Power Door Lock Circuit Diagram (Except Taiwan)”.
Refer to “B-5 Power Door Lock Circuit Diagram (Taiwan)”.
Refer to “B-6 Power Mirror Circuit Diagram (Hatchback (Except Taiwan))”.
Refer to “B-6 Power Mirror Circuit Diagram (Hatchback (Taiwan))”.
Refer to “B-6 Power Mirror Circuit Diagram (Sedan (Except Taiwan))”.
Refer to “B-6 Power Mirror Circuit Diagram (Sedan (Taiwan))”.
Refer to “B-7 Horn Circuit Diagram”.
Refer to “B-8 Seat Heater Circuit Diagram”.
Refer to “B-9 Keyless Start System Circuit Diagram”
Refer to “C-1 Combination Meter Circuit Diagram (Meter)”.
Refer to “C-2 Combination Meter Circuit Diagram (Indicator)”.
Refer to “C-3 Combination Meter Circuit Diagram (Warning Light)”.
Refer to “D-1 Headlight System Circuit Diagram (Except Taiwan)”.
Refer to “D-1 Headlight System Circuit Diagram (Taiwan)”.
Refer to “D-2 Position, Tail and Licence Plate Light System Circuit Diagram (Hatchback (Except Taiwan))”.
Refer to “D-2 Position, Tail and Licence Plate Light System Circuit Diagram (Sedan (Except Taiwan))”.
Refer to “D-2 Position, Tail and Licence Plate Light System Circuit Diagram (Hatchback (Taiwan))”.
Refer to “D-2 Position, Tail and Licence Plate Light System Circuit Diagram (Sedan (Taiwan))”.
Refer to “D-3 Front Fog Light System Circuit Diagram (Except Taiwan)”.
Refer to “D-3 Front Fog Light System Circuit Diagram (Taiwan)”.
Refer to “D-4 Illumination Light System Circuit Diagram (Except Taiwan)”.
Refer to “D-4 Illumination Light System Circuit Diagram (Taiwan)”.
Refer to “D-5 Interior Light System Circuit Diagram (Hatchback (Except Taiwan))”.
Refer to “D-5 Interior Light System Circuit Diagram (Hatchback (Taiwan))”.
Refer to “D-5 Interior Light System Circuit Diagram (Sedan (Except Taiwan))”.
Refer to “D-5 Interior Light System Circuit Diagram (Sedan (Taiwan))”.
Refer to “D-6 Turn Signal and Hazard Warning Light System Circuit Diagram (Hatchback (Except Taiwan))”.
Refer to “D-6 Turn Signal and Hazard Warning Light System Circuit Diagram (Sedan (Except Taiwan))”.
Refer to “D-6 Turn Signal and Hazard Warning Light System Circuit Diagram (Hatchback (Taiwan))”.
Refer to “D-6 Turn Signal and Hazard Warning Light System Circuit Diagram (Sedan (Taiwan))”.
Refer to “D-7 Brake Light System Circuit Diagram (Hatchback)”.
Refer to “D-7 Brake Light System Circuit Diagram (Sedan)”.
Refer to “D-8 Back-Up Light System Circuit Diagram (Hatchback)”.
Refer to “D-8 Back-Up Light System Circuit Diagram (Sedan)”.
Refer to “D-9 Headlight Beam Leveling System Circuit Diagram (Manual Leveling)”.

Refer to “D-10 Rear Fog Light Circuit Diagram (Hatchback)”.
Refer to “D-10 Rear Fog Light Circuit Diagram (Sedan)”.
Refer to “E-1 Heater System Circuit Diagram”.
Refer to “E-2 Auto A/C System Circuit Diagram”.
Refer to “F-1 Air-Bag System Circuit Diagram (4ch)”.
Refer to “F-1 Air-Bag System Circuit Diagram (8ch)”.
Refer to “F-2 Anti-Lock Brake System Circuit Diagram”.
Refer to “F-3 Electronic Stability Program System Circuit Diagram”.
Refer to “F-4 Power Steering System Circuit Diagram”.
Refer to “G-1 Audio System Circuit Diagram”.
Refer to “G-2 Multi Information Display / Accessory Socket System Circuit Diagram”.
Refer to “G-4 Navigation System Circuit Diagram”.

A-1 Cranking System Circuit Diagram

S7RW0A910E002

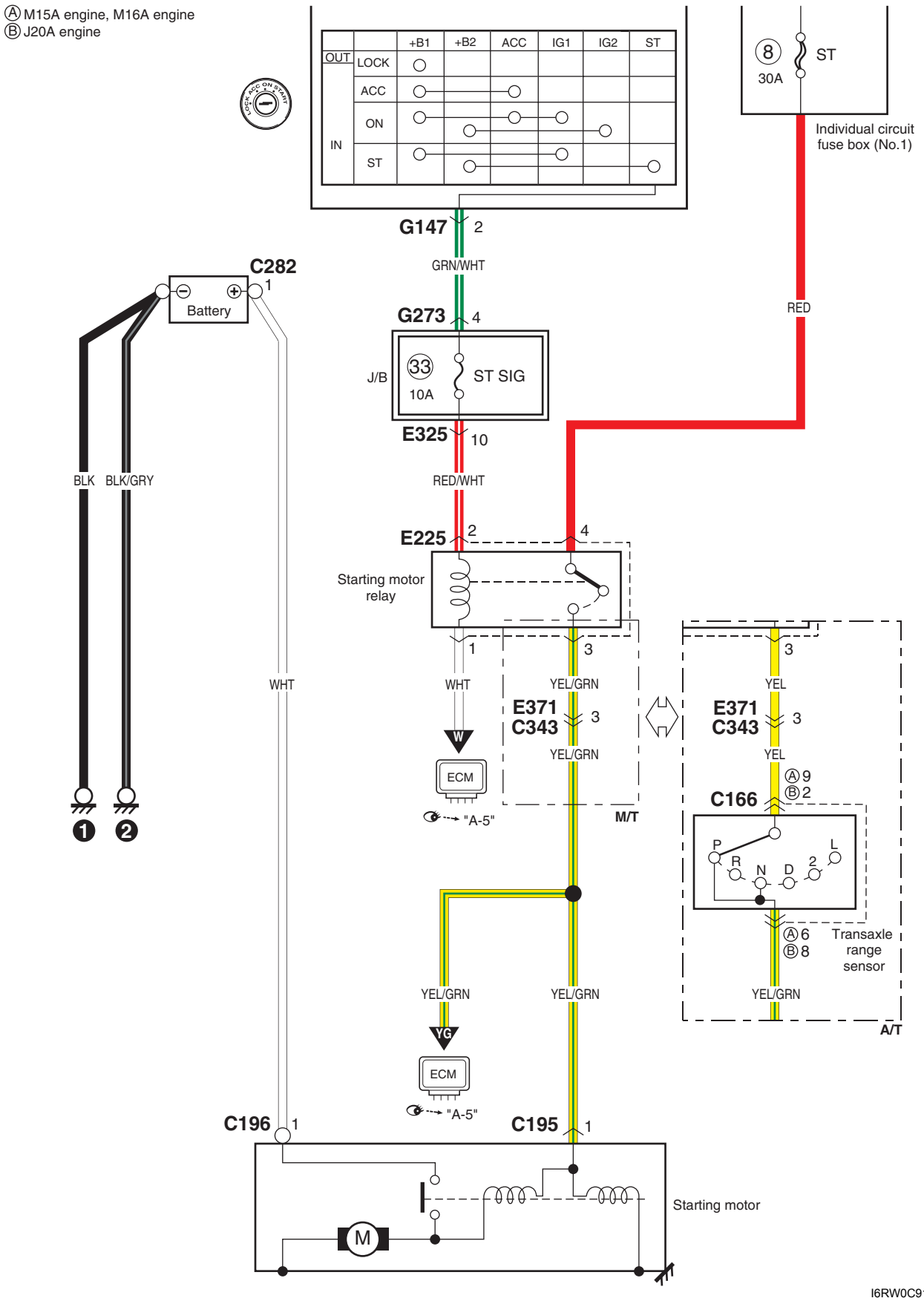

I6RW0C910933-01

A-2 Charging System Circuit Diagram

S7RW0A910E003

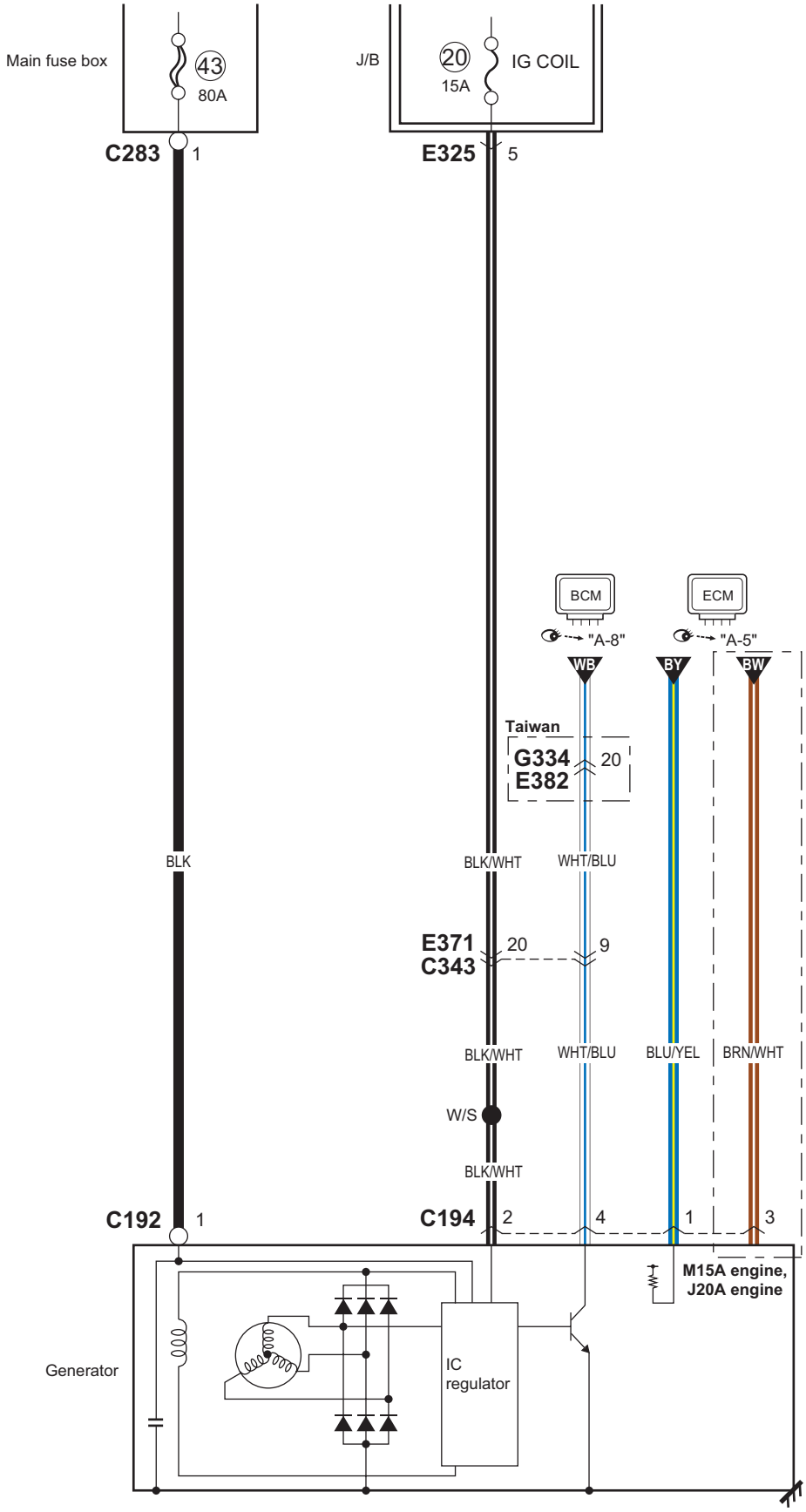

I7RW0A910968-02

A-3 Ignition System Circuit Diagram (M15A engine, M16A engine)

S7RW0A910E004

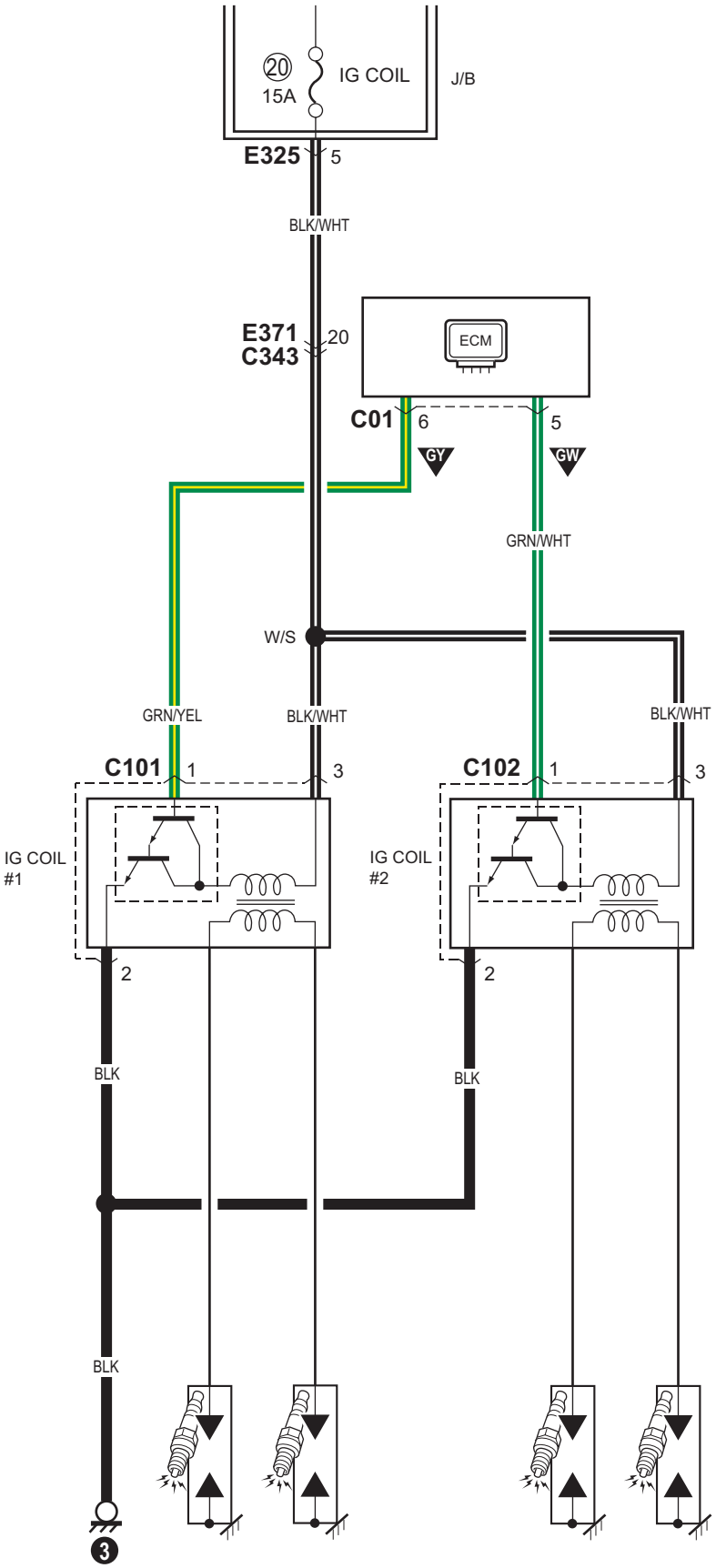

I7RW0A910969-02

A-3 Ignition System Circuit Diagram (J20A engine)

S7RW0A910E005

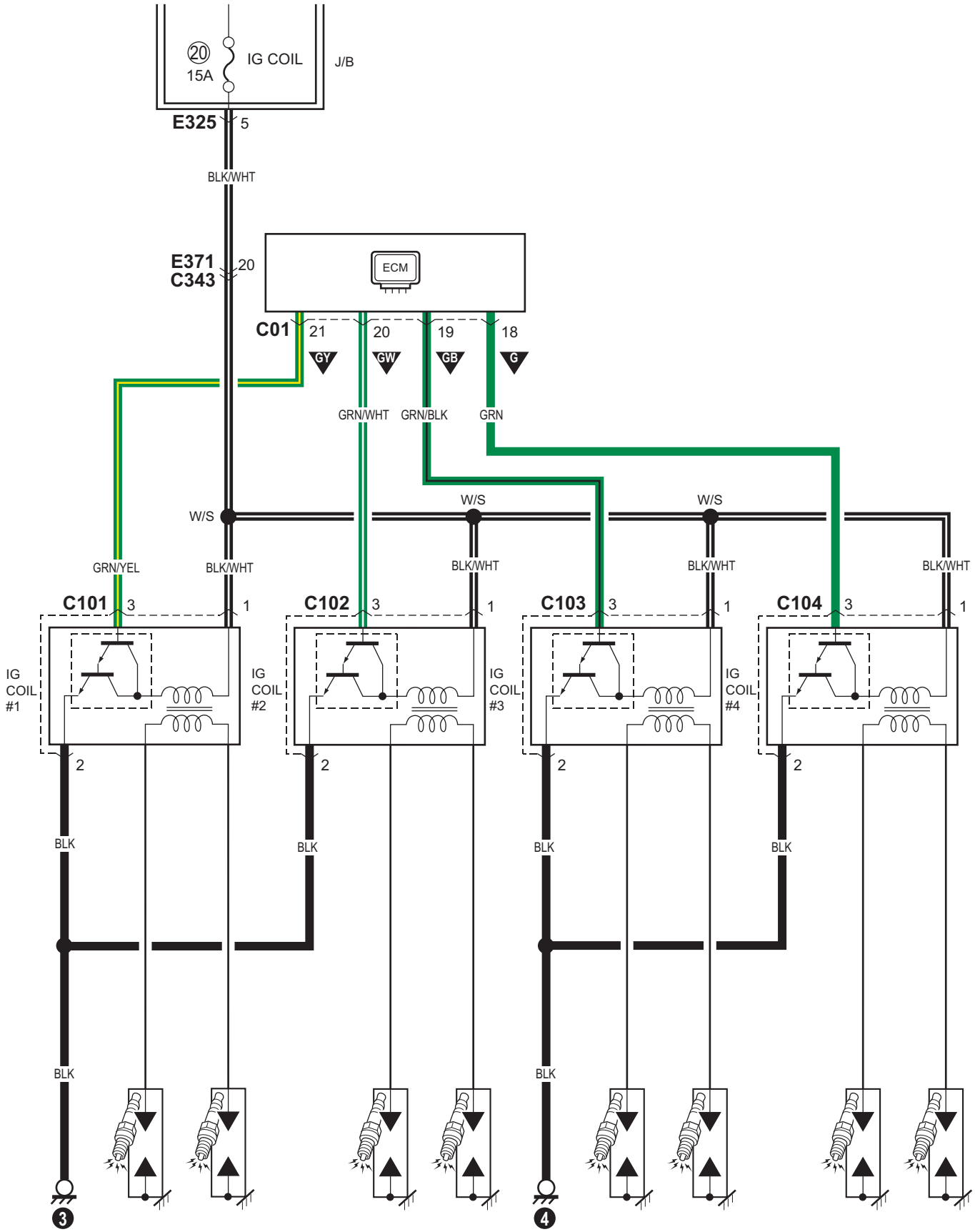

I7RW0A910970-03

A-4 Cooling System Circuit Diagram (M15A engine, M16A engine)

S7RW0A910E006

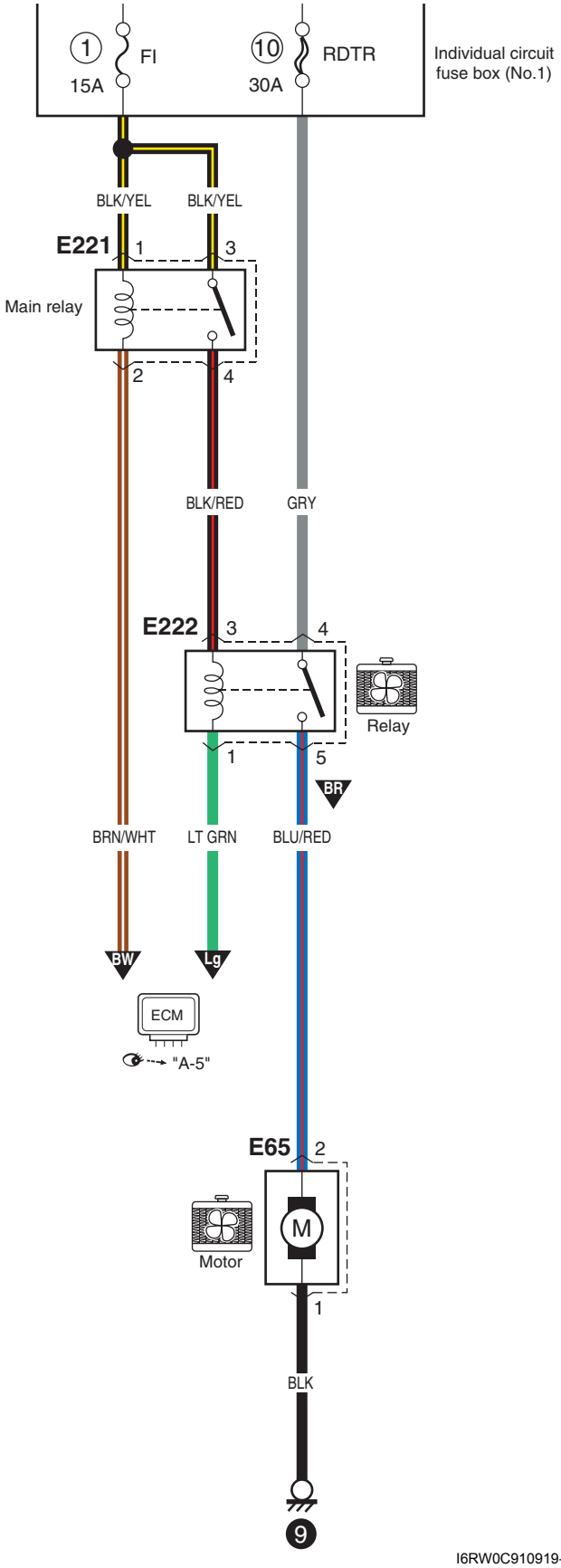

I6RW0C910919-01

A-4 Cooling System Circuit Diagram (J20A engine)

S7RW0A910E007

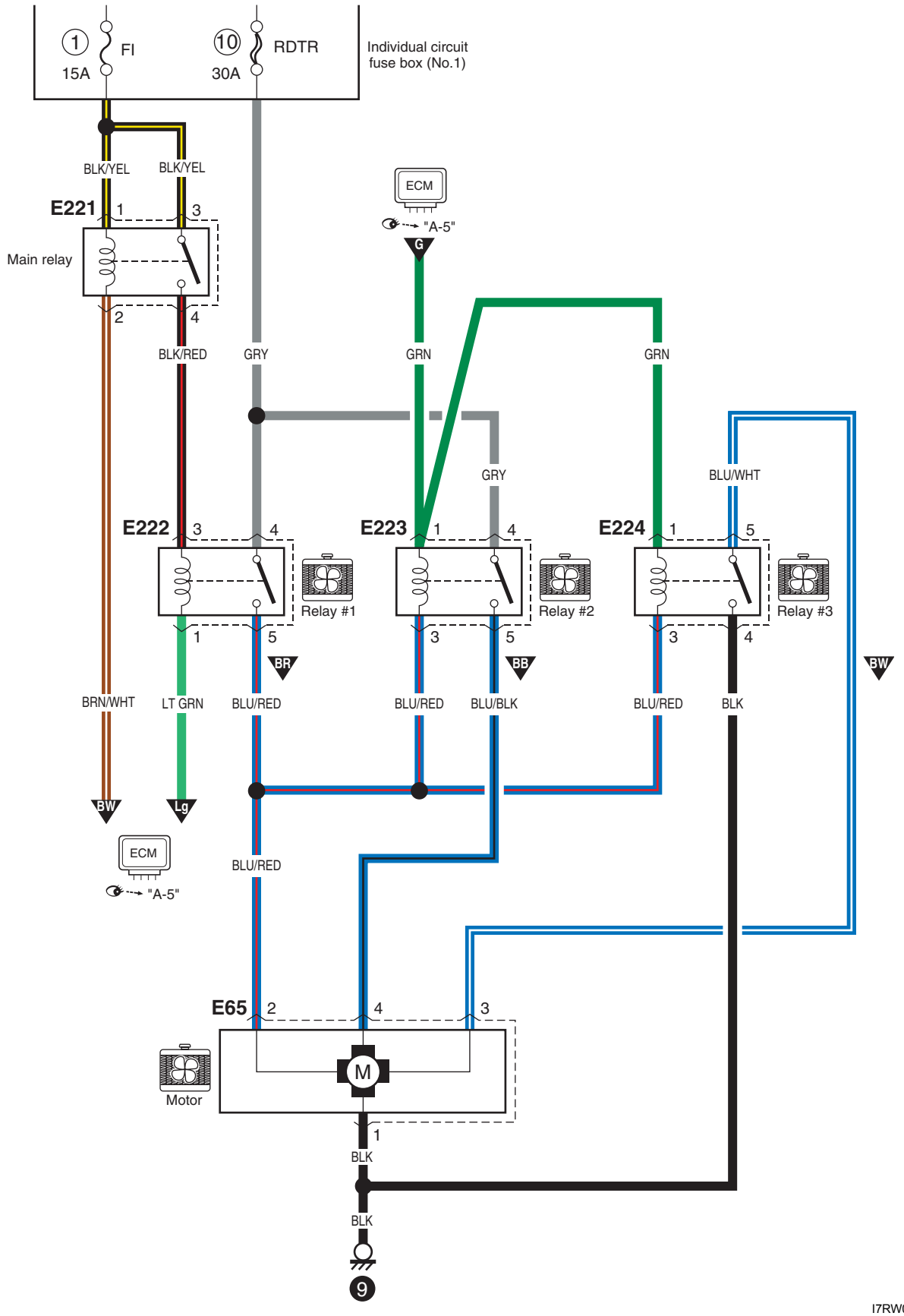

I7RW01910924-02

A-5 Engine and A/C Control System Circuit Diagram (M15A engine)

S7RW0A910E008

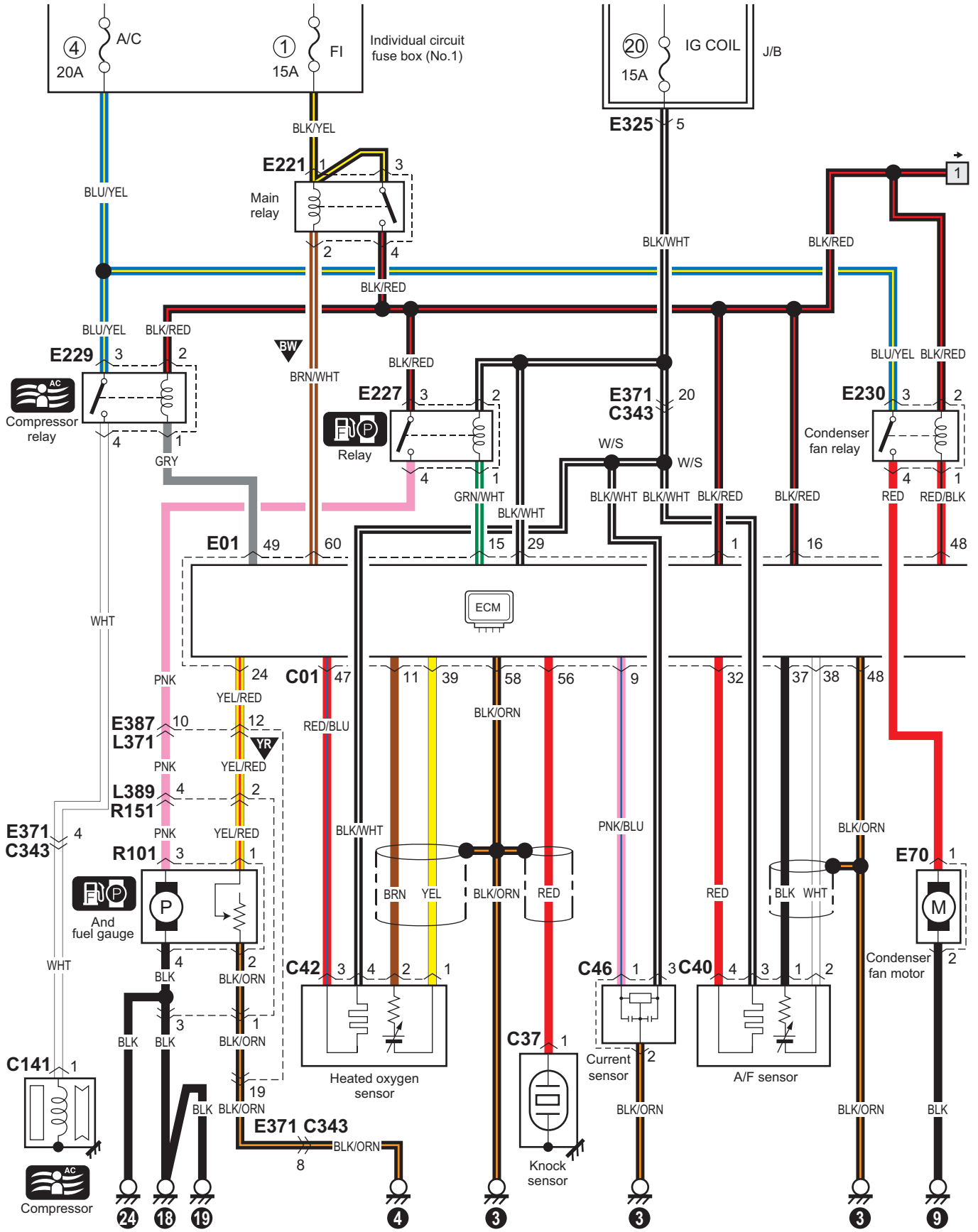

I7RW0A910910-03

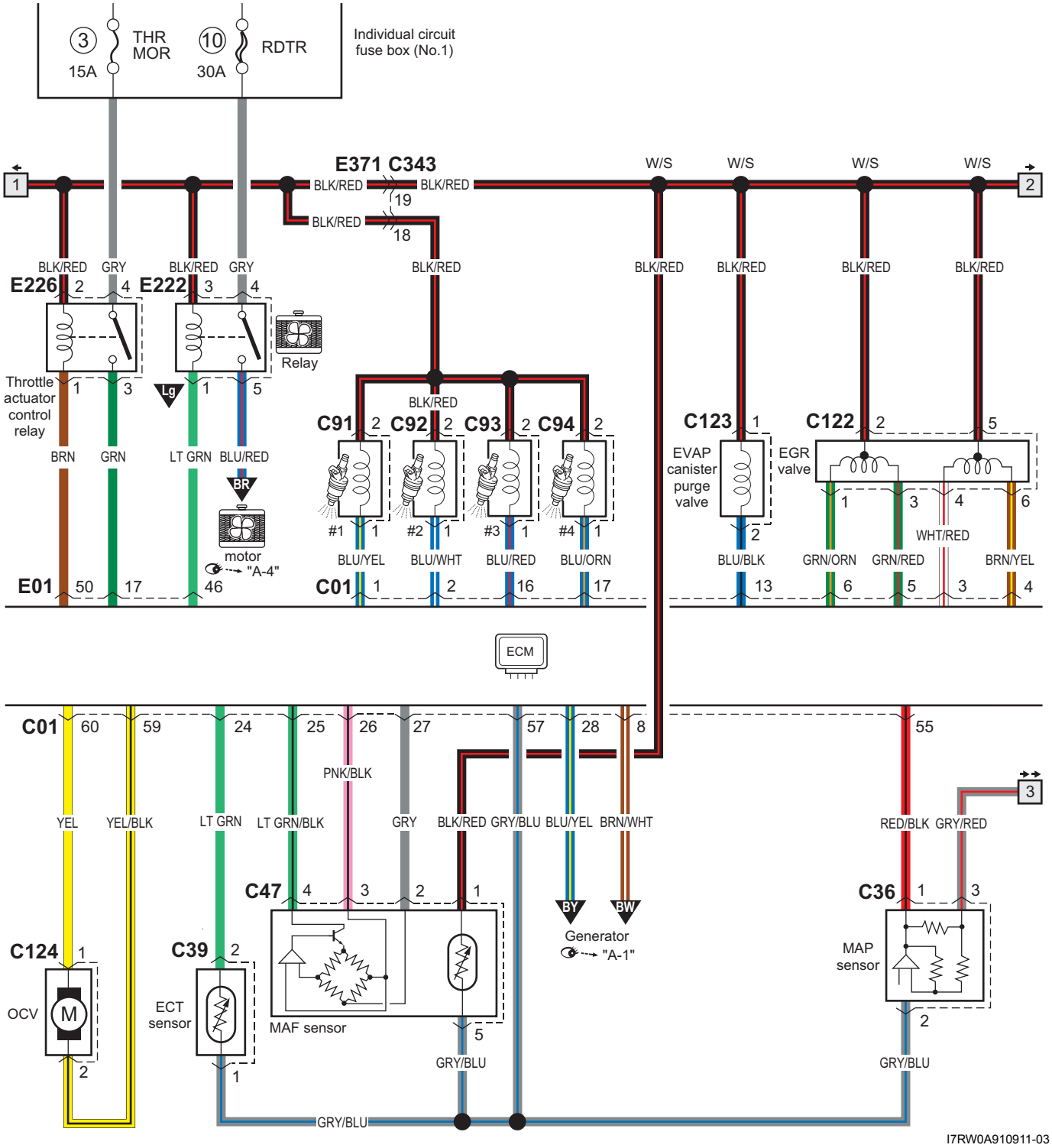
3
THR MOR
15A
10
RDTR
30A
Individual circuit fuse box (No.1)
1
2
E371 C343
BLK/RED
19
18
W/S
BLK/RED
GRY
E226
E222
Relay
Throttle actuator control relay
Lg
BRN
GRN
LT GRN
BLU/RED
BR
motor
"A-4"
E01
50
17
46
C91
C92
C93
C94
#1
#2
#3
#4
BLU/YEL
BLU/WHT
BLU/RED
BLU/ORN
C01
16
C123
EVAP canister purge valve
BLU/BLK
13
C122
EGR valve
GRN/ORN
GRN/RED
WHT/RED
BRN/YEL
ECM
YEL
YEL/BLK
LT GRN/BLK
PNK/BLK
BLU/YEL
BRN/WHT
RED/BLK
GRY/RED
C124
OCV
M
C39
ECT sensor
C47
MAF sensor
GRY/BLU
BY
BW
Generator
"A-1"
C36
MAP sensor
I7RW0A910911-03

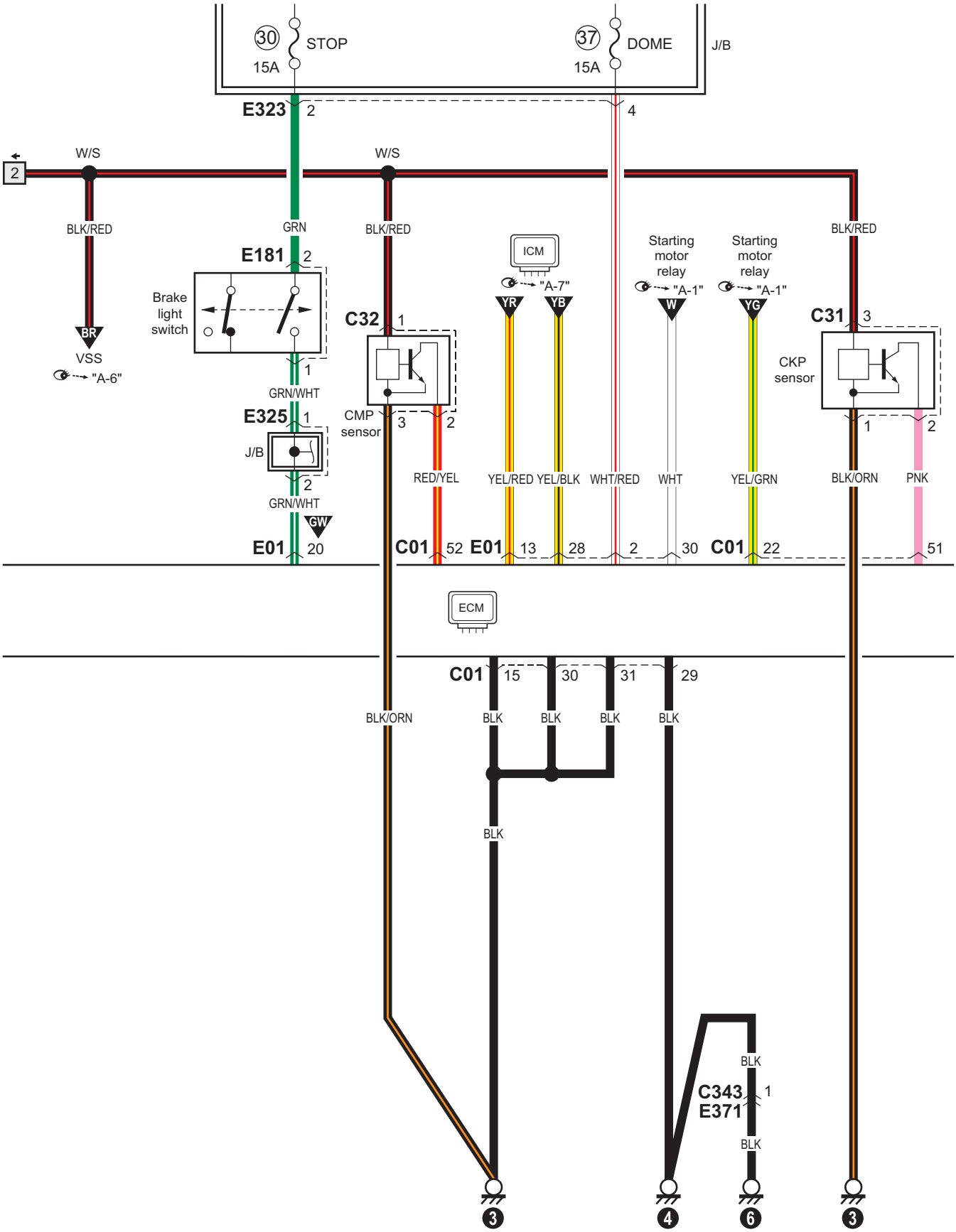

I7RW0A910912-03

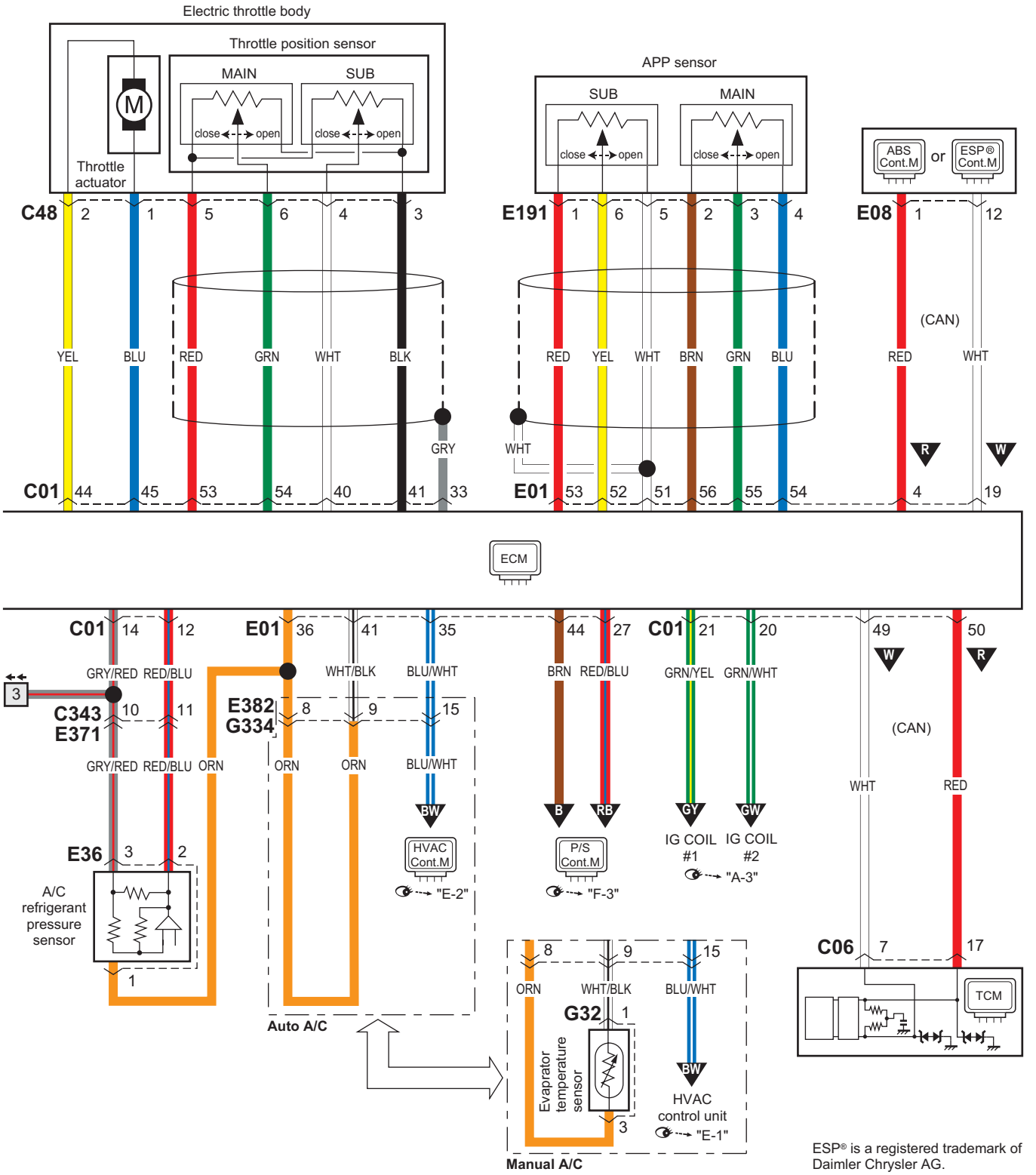

ESP® is a registered trademark of Daimler Chrysler AG.

I7RW0A910913-03

A-5 Engine and A/C Control System Circuit Diagram (M16A engine)

S7RW0A910E009

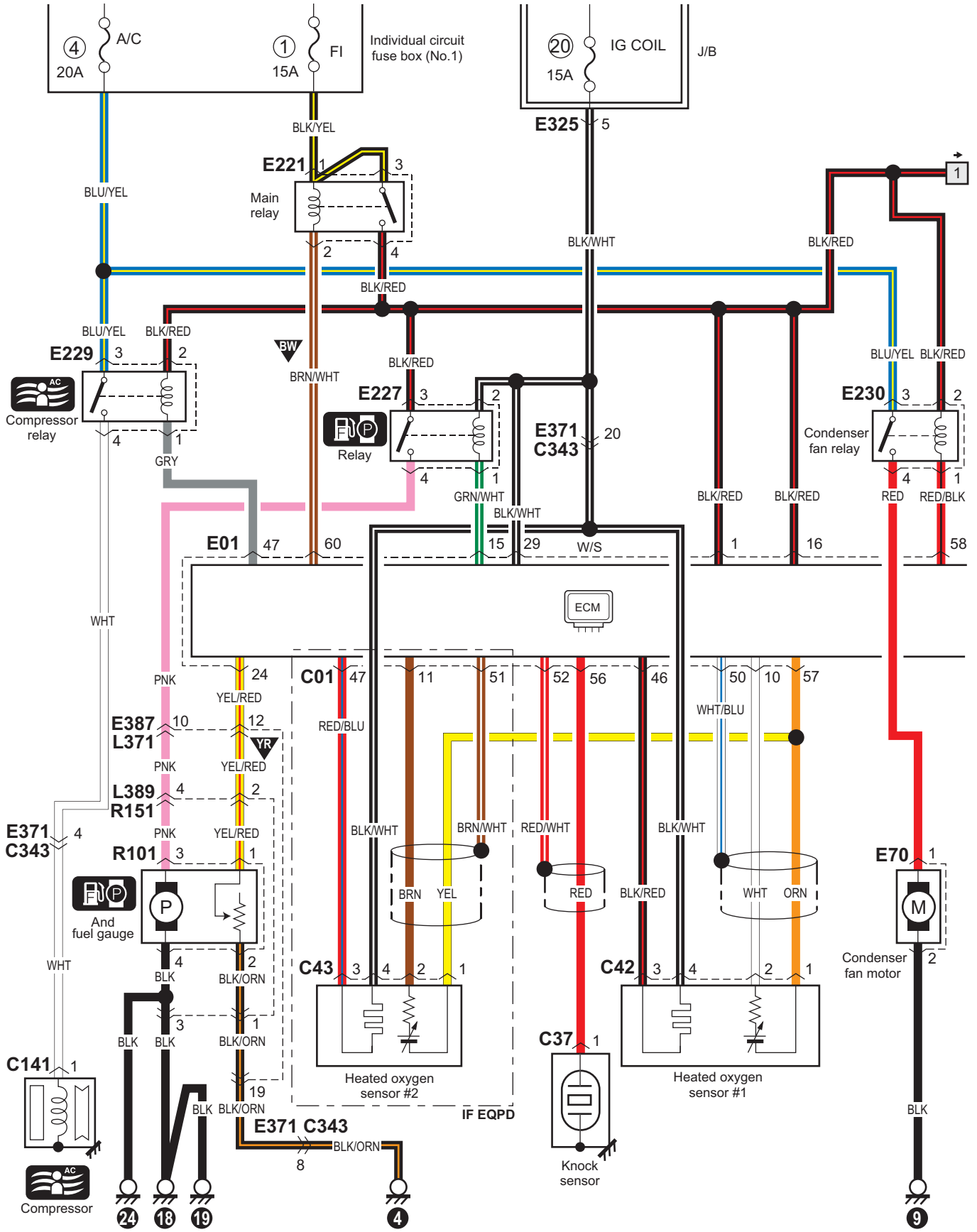

I7RW0A910914-04

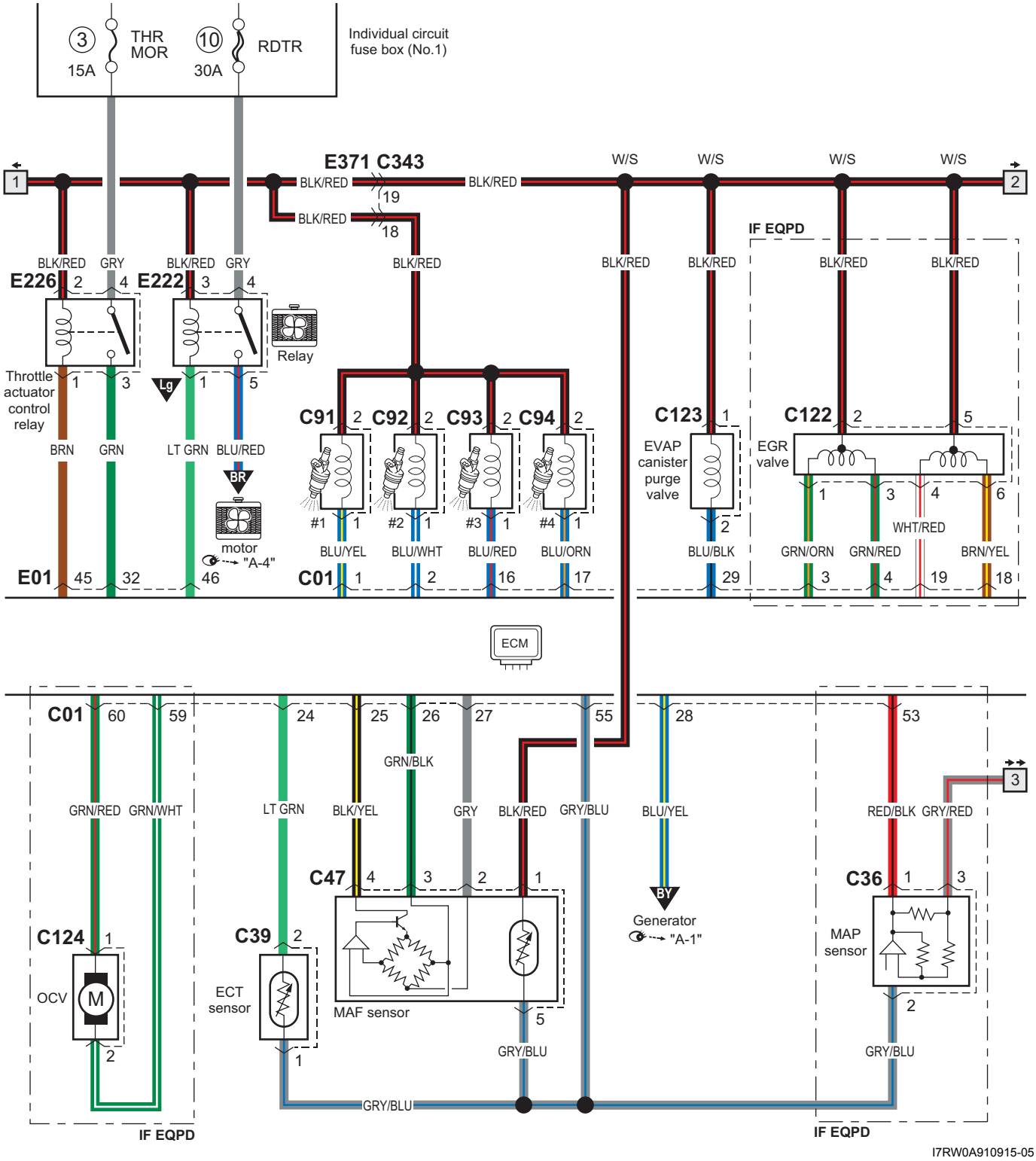
3
THR
MOR
15A
10
RDTR
30A
Individual circuit
fuse box (No.1)
1
2
E371 C343
BLK/RED
19
18
W/S
IF EQPD
E226
E222
GRY
Relay
Throttle
actuator
control
relay
Lg
BRN
GRN
LT GRN
BLU/RED
BR
motor
"A-4"
E01
45
32
46
C91
C92
C93
C94
#1
#2
#3
#4
BLU/YEL
BLU/WHT
BLU/RED
BLU/ORN
C01
C123
EVAP
canister
purge
valve
BLU/BLK
29
C122
EGR
valve
GRN/ORN
GRN/RED
WHT/RED
BRN/YEL
ECM
60
59
24
25
26
27
55
28
53
GRN/BLK
GRN/RED
GRN/WHT
LT GRN
BLK/YEL
GRY
BLK/RED
GRY/BLU
BLU/YEL
RED/BLK
GRY/RED
C124
OCV
M
C39
ECT
sensor
C47
MAF sensor
BY
Generator
"A-1"
C36
MAP
sensor
IF EQPD
I7RW0A910915-05

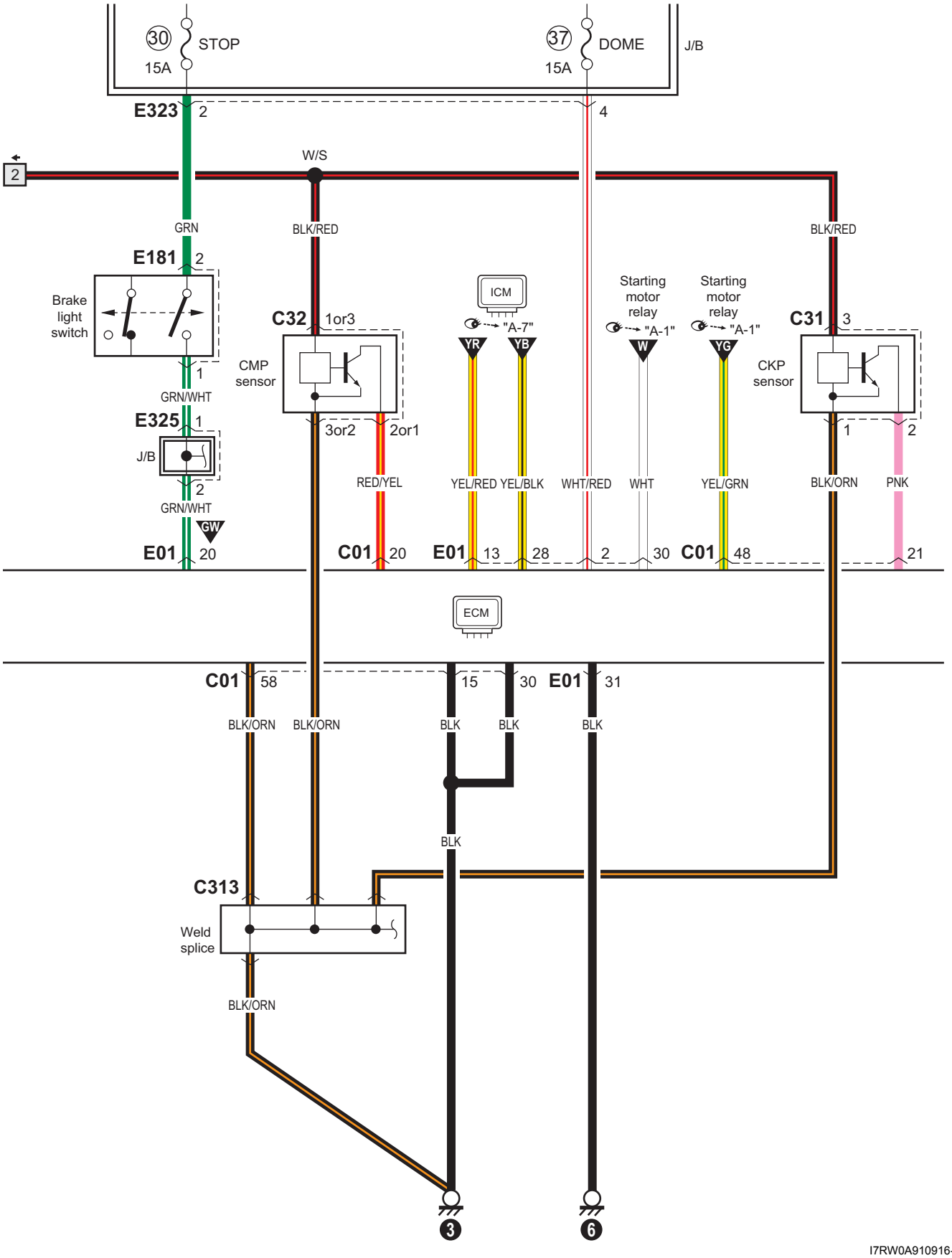

I7RW0A910916-03

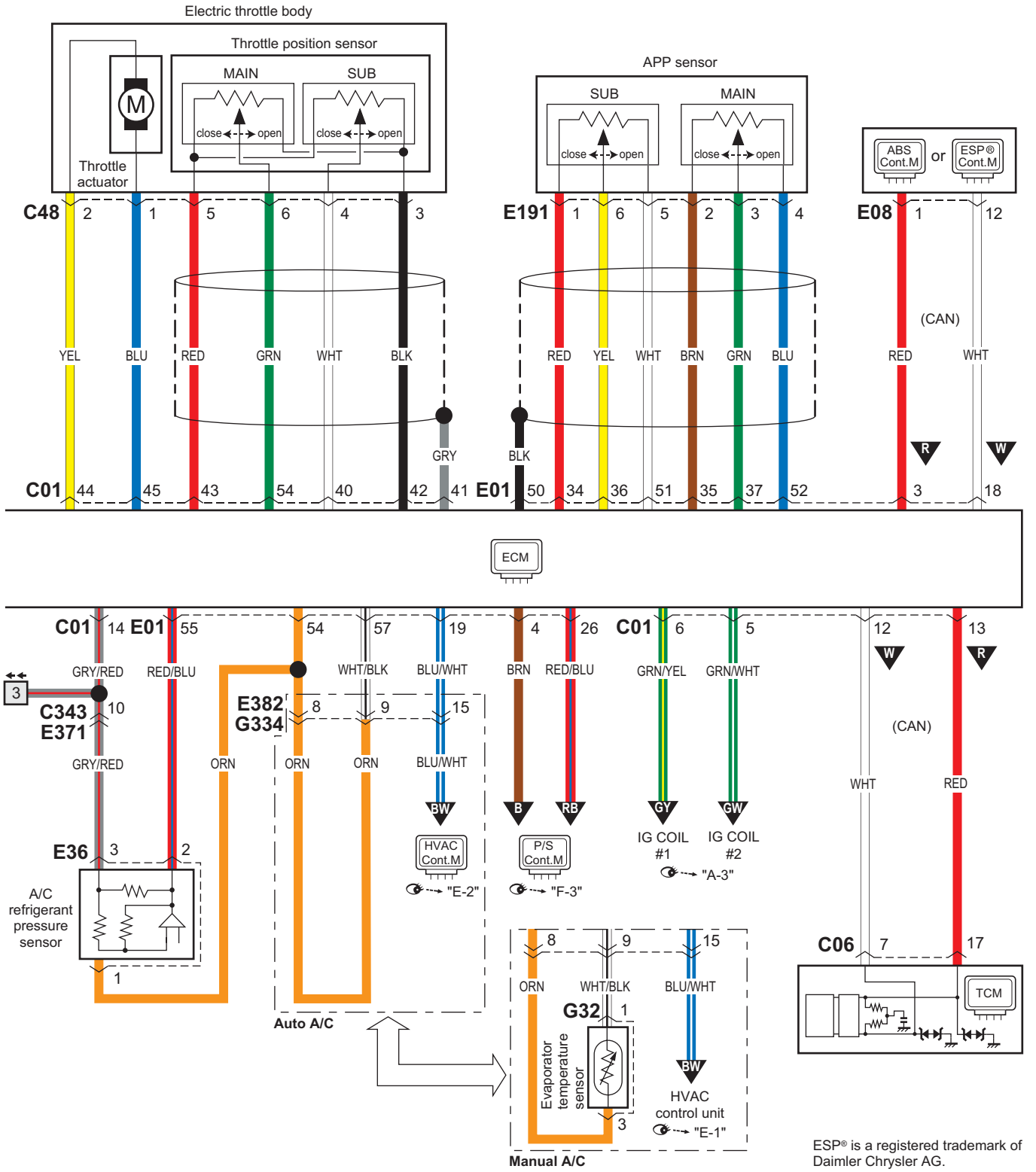

ESP® is a registered trademark of Daimler Chrysler AG.

I7RW0A910917-03

A-5 Engine and A/C Control System Circuit Diagram (J20A engine)

S7RW0A910E010

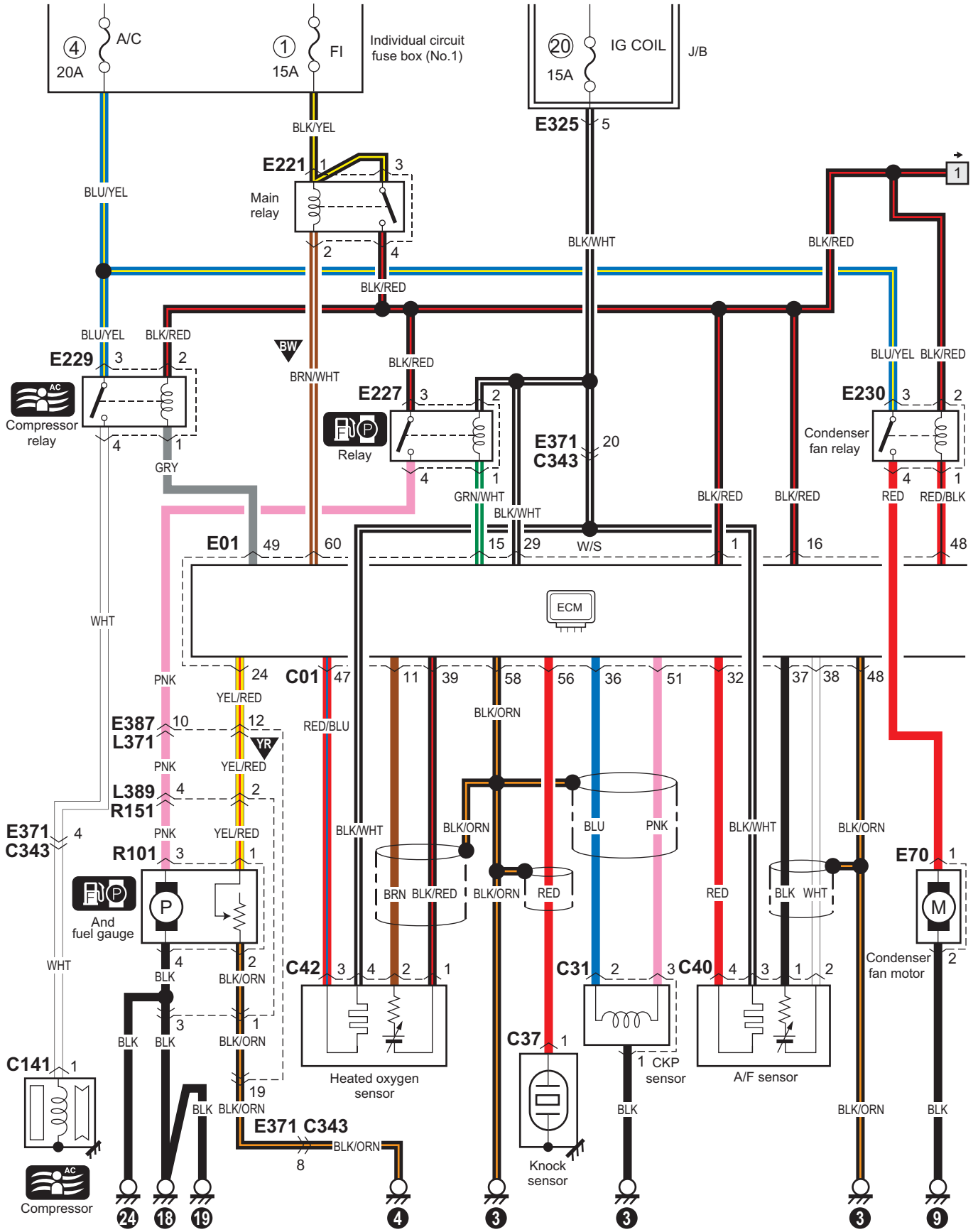

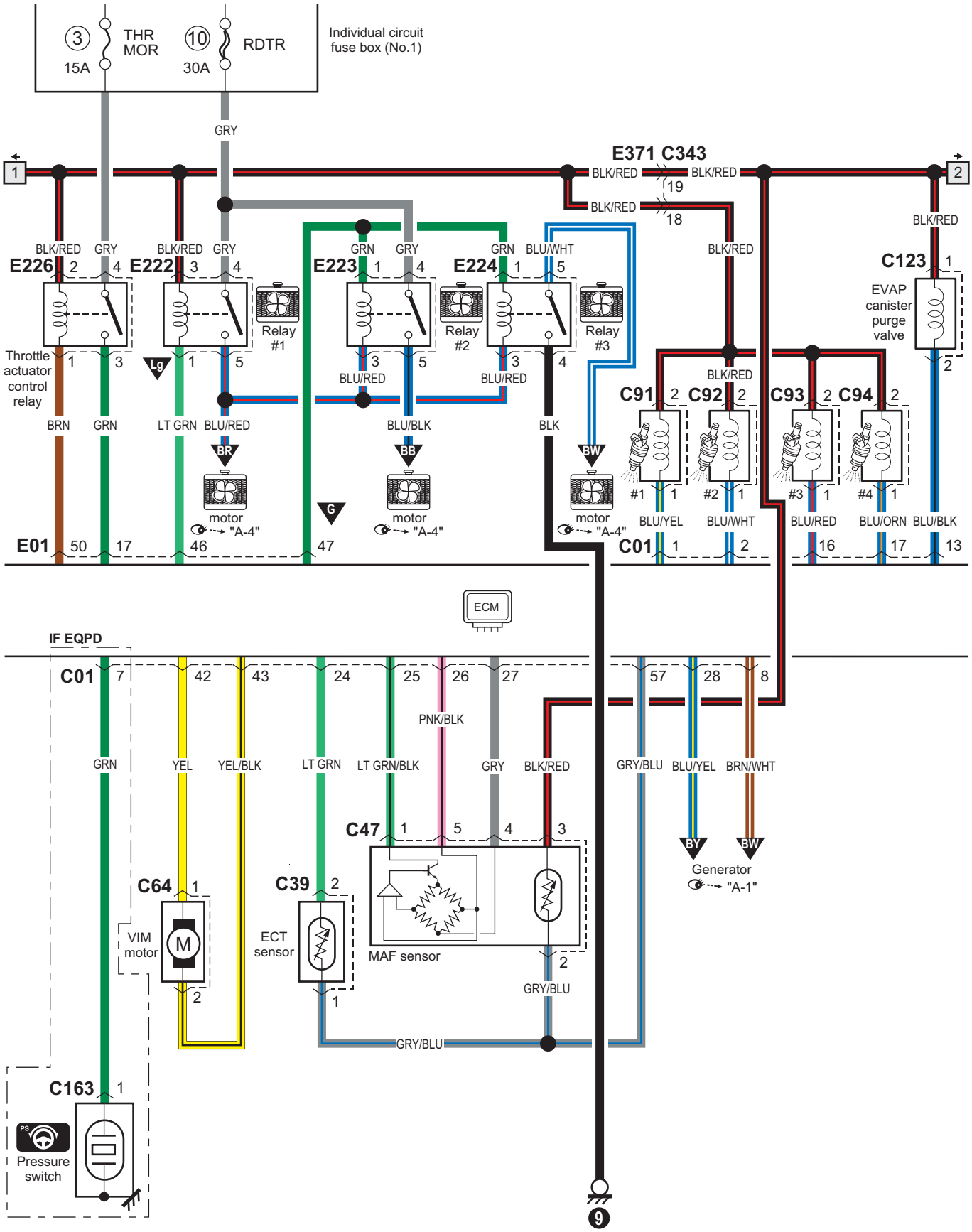

I7RW0A910919-04

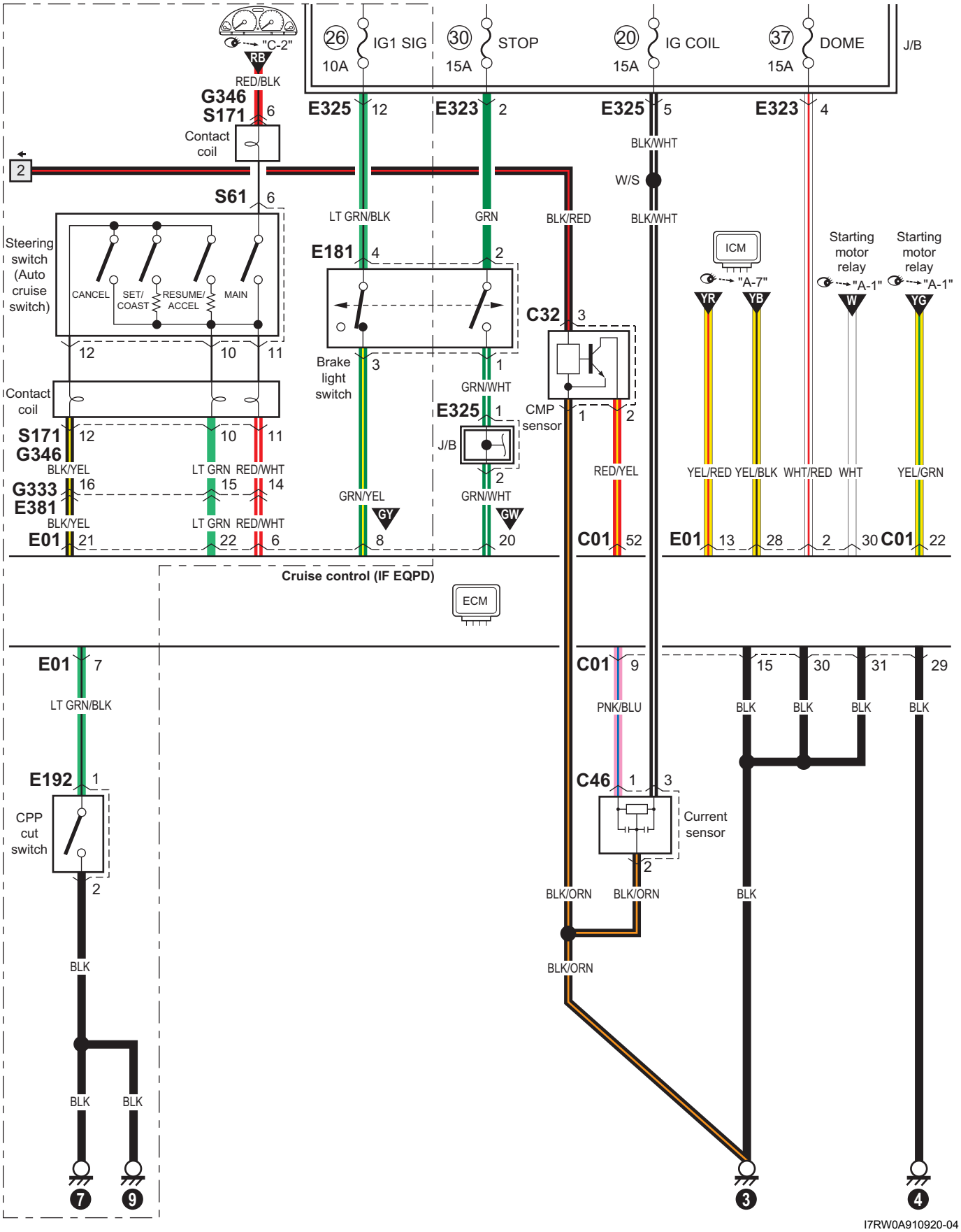

I7RW0A910920-04

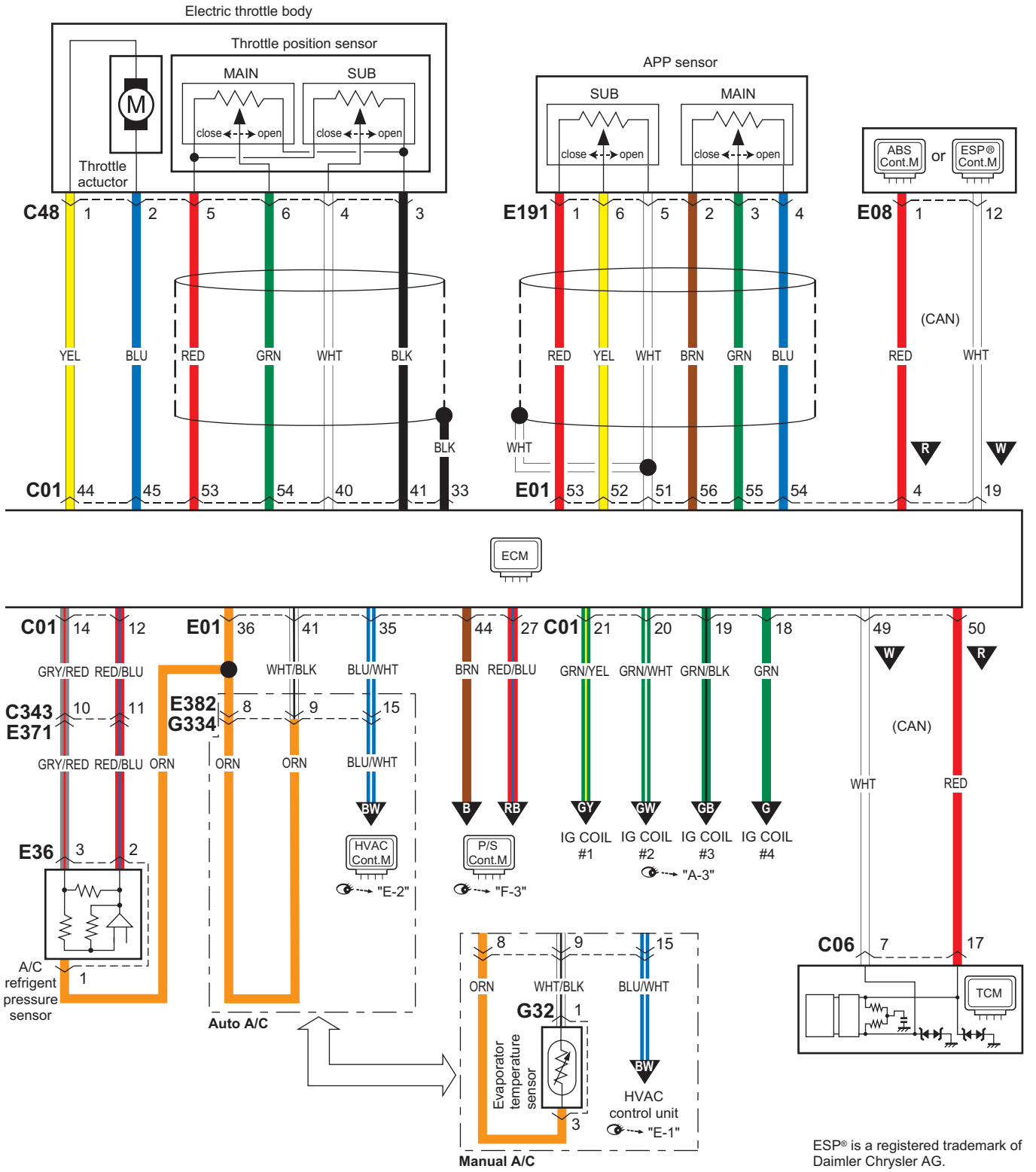

ESP® is a registered trademark of Daimler Chrysler AG.

I7RW0A910921-03

A-6 A/T Control System Circuit Diagram

S7RW0A910E011

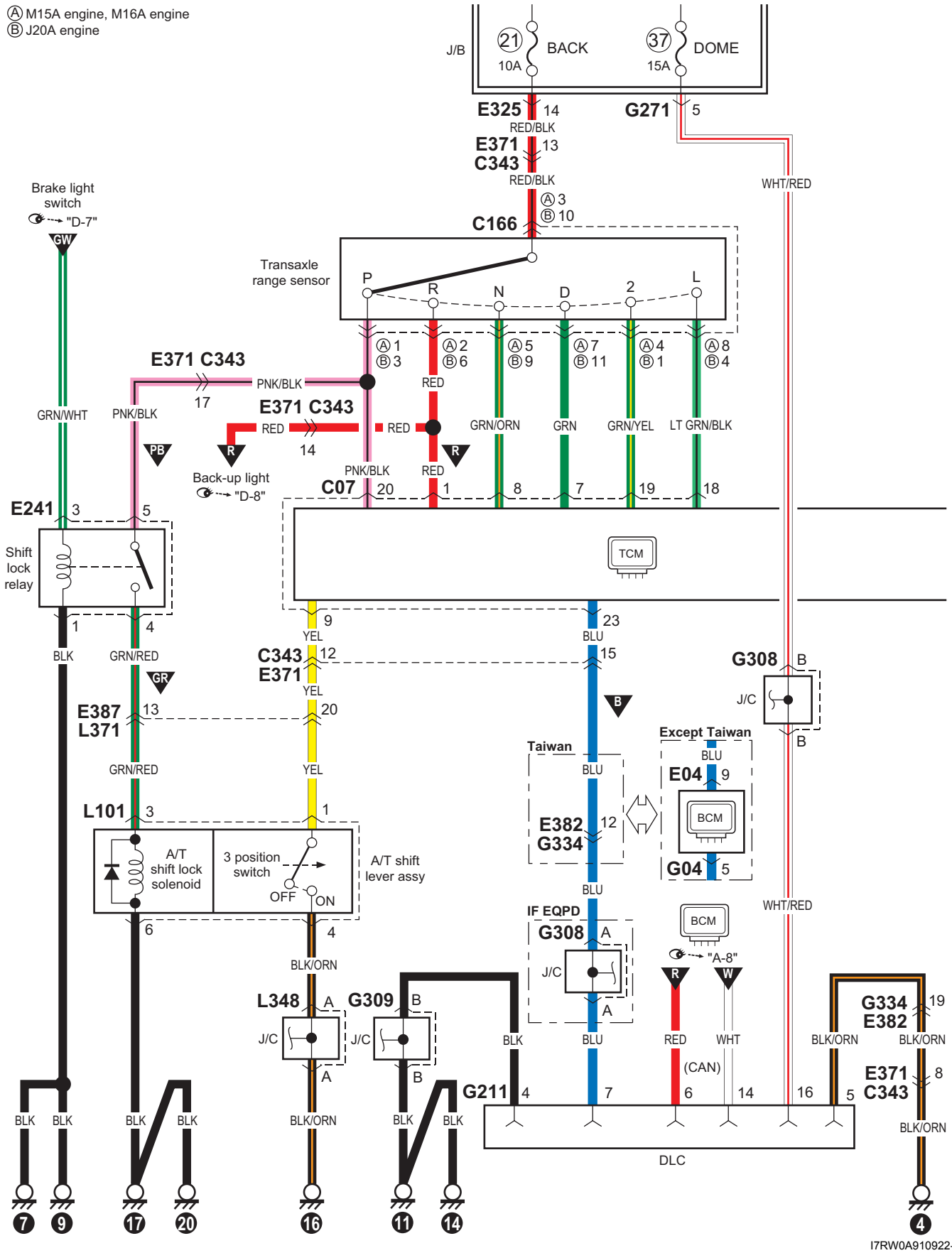

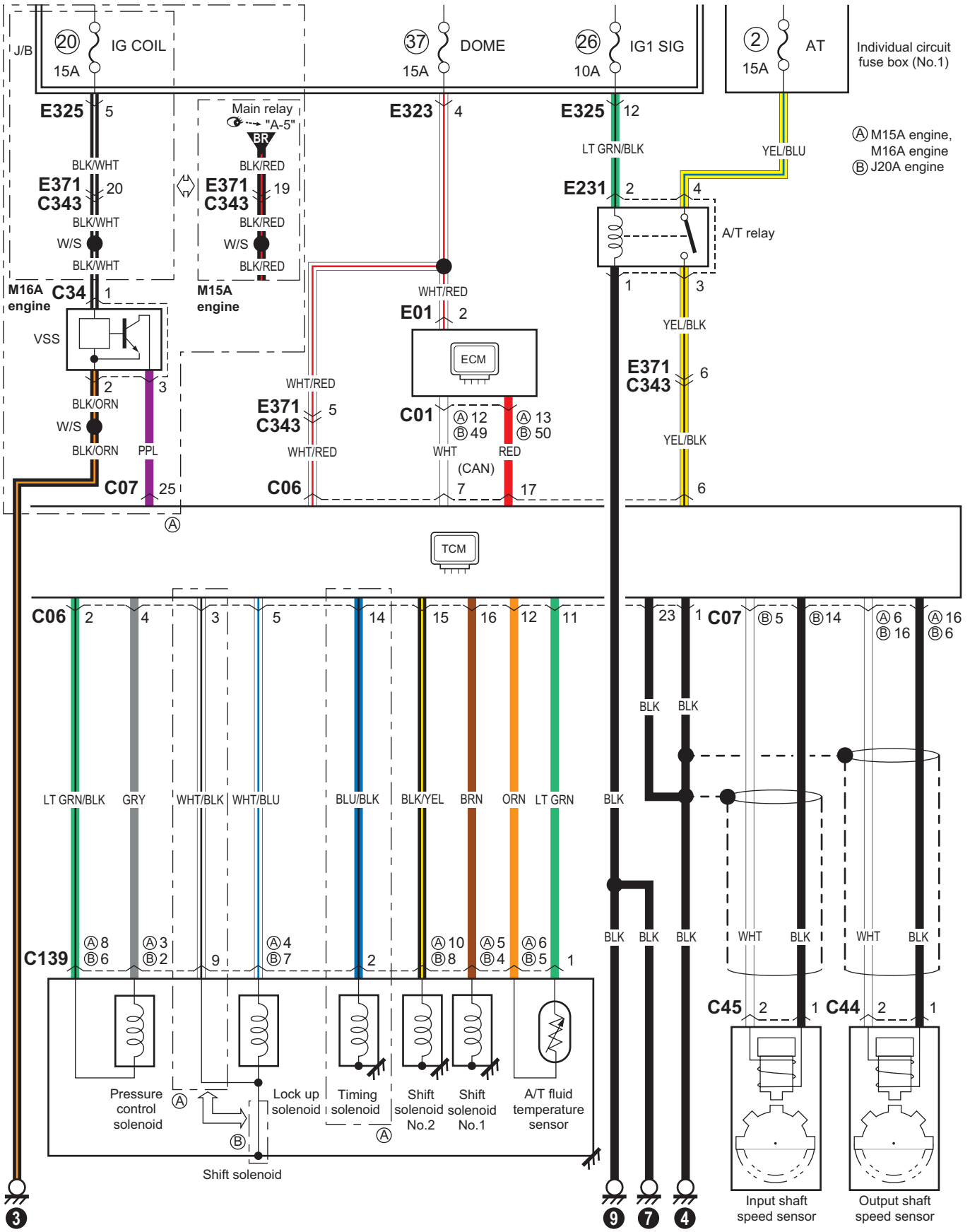
J/B
20
IG COIL
15A
37
DOME
15A
26
IG1 SIG
10A
2
AT
15A
Individual circuit fuse box (No.1)
Ⓐ M15A engine, M16A engine
Ⓑ J20A engine
E325
5
BLK/WHT
E371
C343
20
BLK/WHT
W/S
BLK/WHT
M16A engine
C34
1
VSS
2
3
BLK/ORN
W/S
BLK/ORN
PPL
C07
25
Ⓐ
Main relay
"A-5"
BR
BLK/RED
E371
C343
19
BLK/RED
W/S
BLK/RED
M15A engine
E323
4
WHT/RED
E01
2
ECM
WHT/RED
E371
C343
5
WHT/RED
C06
C01
Ⓐ 12
Ⓑ 49
Ⓐ 13
Ⓑ 50
WHT
RED
(CAN)
7
17
E325
12
LT GRN/BLK
E231
2
4
A/T relay
1
3
YEL/BLU
YEL/BLK
E371
C343
6
YEL/BLK
6
TCM
C06
2
4
3
5
14
15
16
12
11
23
1
C07
Ⓑ 5
Ⓑ 14
Ⓐ 6
Ⓑ 16
Ⓐ 16
Ⓑ 6
LT GRN/BLK
GRY
WHT/BLK
WHT/BLU
BLU/BLK
BLK/YEL
BRN
ORN
LT GRN
BLK
BLK
BLK
C139
Ⓐ 8
Ⓑ 6
Ⓐ 3
Ⓑ 2
9
Ⓐ 4
Ⓑ 7
2
Ⓐ 10
Ⓑ 8
Ⓐ 5
Ⓑ 4
Ⓐ 6
Ⓑ 5
1
BLK
BLK
BLK
WHT
BLK
WHT
BLK
C45
2
1
C44
2
1
Pressure control solenoid
Ⓐ
Lock up solenoid
Timing solenoid
Ⓐ
Shift solenoid No.2
Shift solenoid No.1
A/T fluid temperature sensor
Ⓑ
Shift solenoid
Input shaft speed sensor
Output shaft speed sensor
3
9
7
4
I7RW0A910923-03

A-7 Immobilizer System Circuit Diagram

S7RW0A910E012

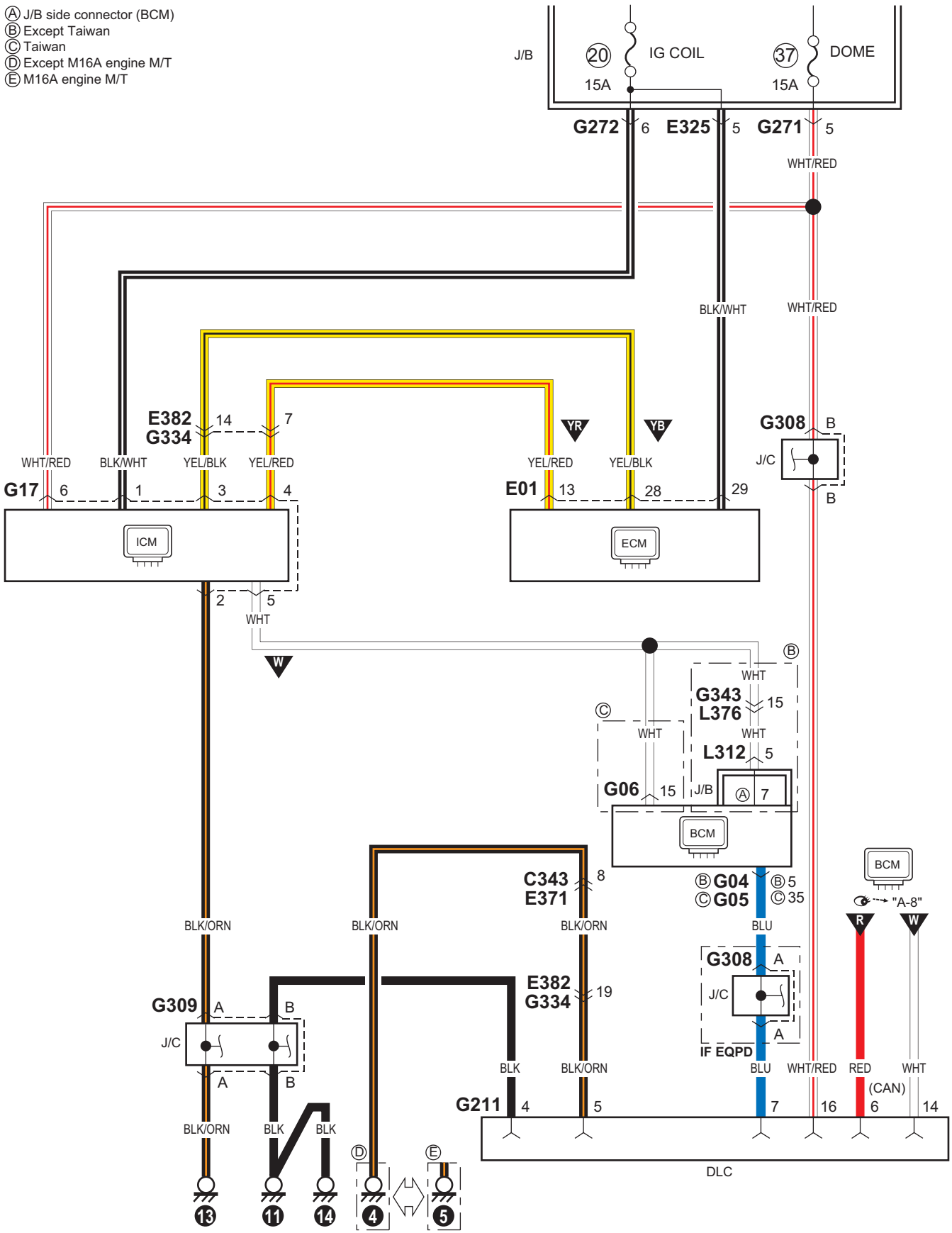

I7RW0A910924-03

A-8 Body Control System Circuit Diagram (Except Taiwan)

S7RW0A910E013

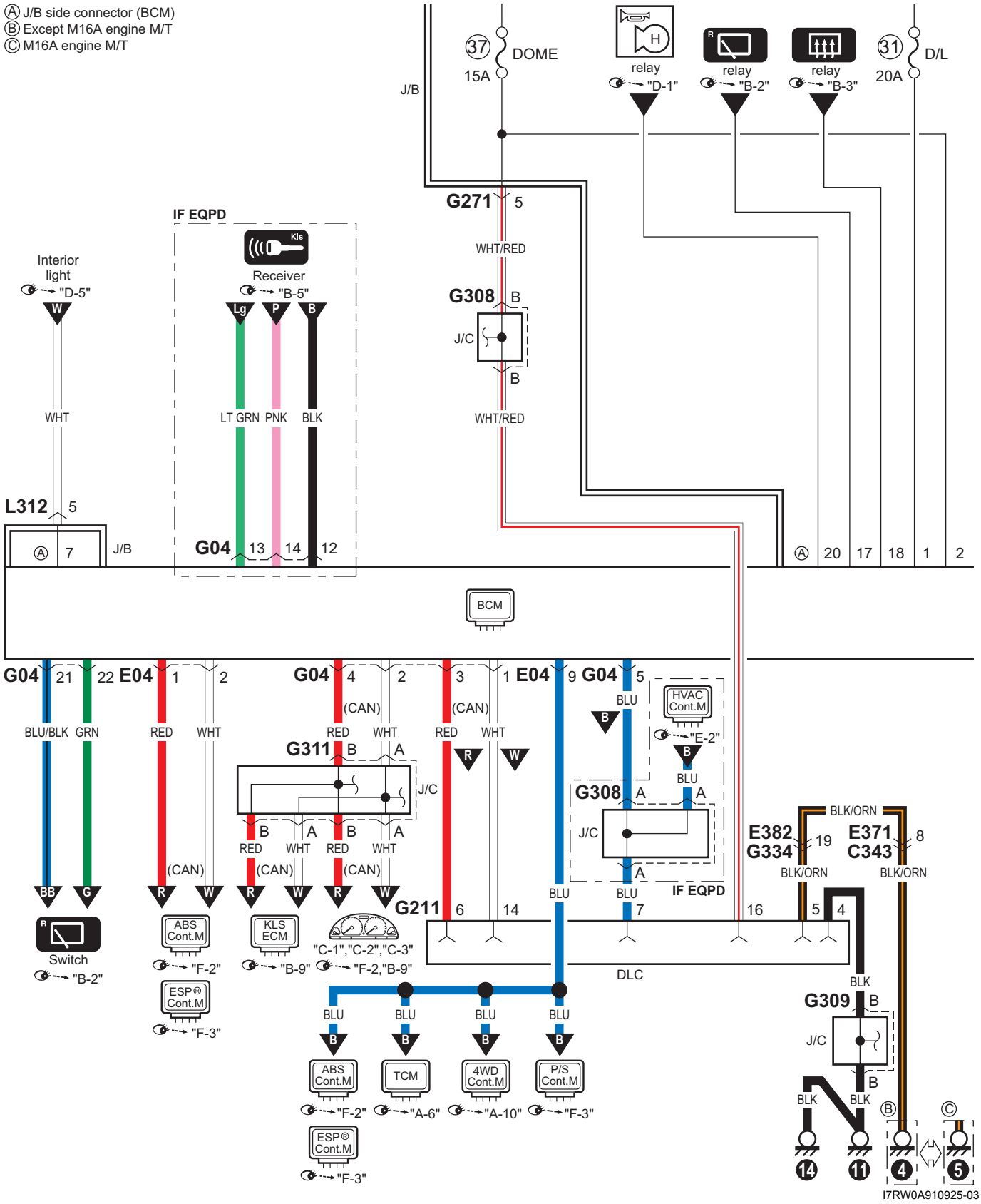

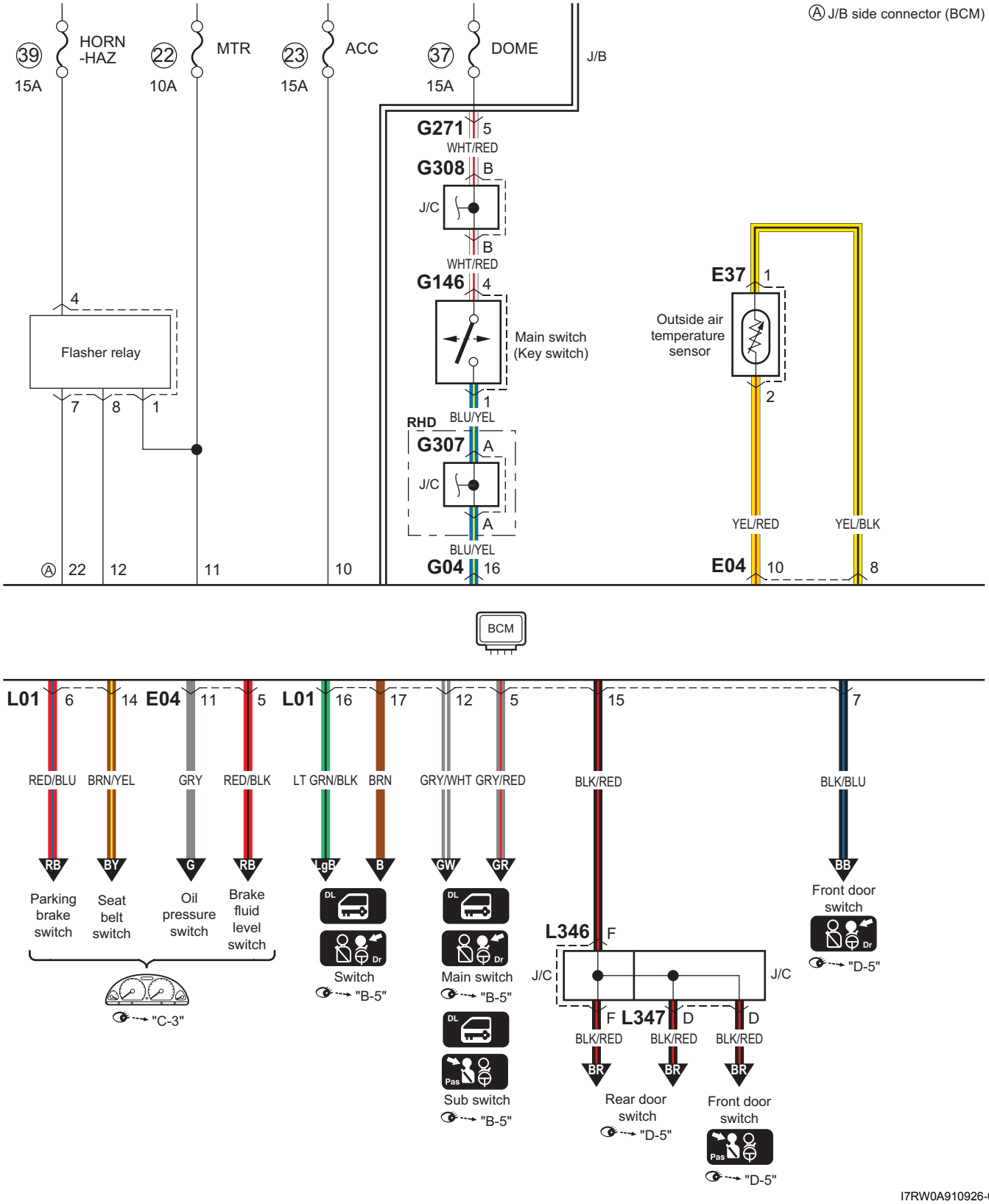
Ⓐ J/B side connector (BCM)
39 HORN -HAZ 15A
22 MTR 10A
23 ACC 15A
37 DOME 15A
J/B
G271 5
WHT/RED
G308 B
J/C
B
WHT/RED
G146 4
Main switch (Key switch)
1
RHD BLU/YEL
G307 A
J/C
A
BLU/YEL
G04 16
4
Flasher relay
7 8 1
Ⓐ 22 12 11 10
E37 1
Outside air temperature sensor
2
YEL/RED
YEL/BLK
E04 10 8
BCM
L01 6 14 E04 11 5 L01 16 17 12 5 15 7
RED/BLU BRN/YEL GRY RED/BLK LT GRN/BLK BRN GRY/WHT GRY/RED BLK/RED BLK/BLU
RB BY G RB LgB B GW GR BB
Parking brake switch
Seat belt switch
Oil pressure switch
Brake fluid level switch
"C-3"
Switch
"B-5"
Main switch
"B-5"
Sub switch
"B-5"
L346 F
J/C
J/C
F L347 D D
BLK/RED BLK/RED BLK/RED
BR BR BR
Rear door switch
"D-5"
Front door switch
"D-5"
Front door switch
"D-5"
I7RW0A910926-03

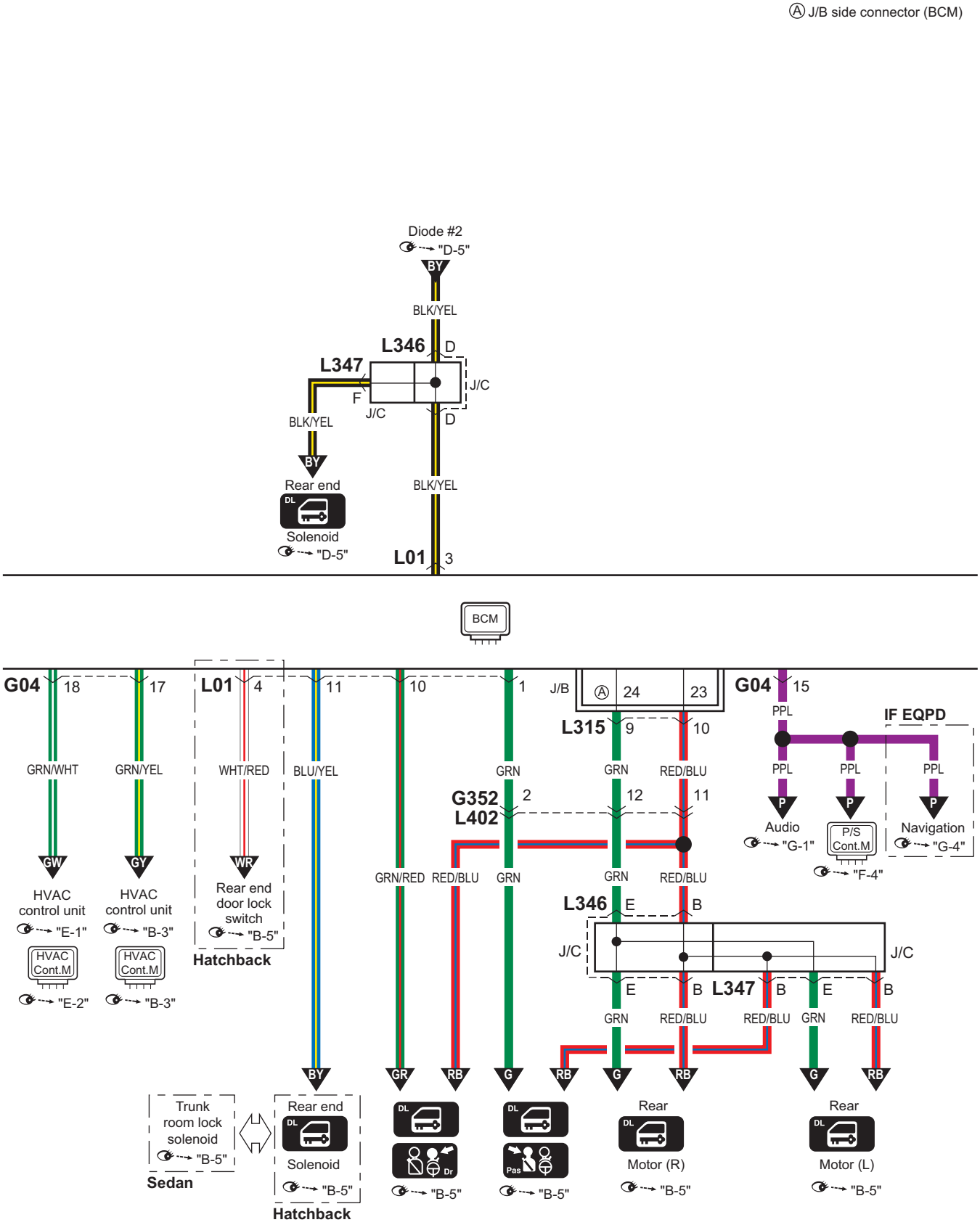
Ⓐ J/B side connector (BCM)
Diode #2
"D-5"
BY
BLK/YEL
L346
D
L347
F
J/C
BLK/YEL
J/C
D
BY
Rear end
BLK/YEL
DL
Solenoid
"D-5"
L01
3
BCM
G04
18
17
L01
4
11
10
1
J/B
Ⓐ
24
23
G04
15
L315
9
10
IF EQPD
GRN/WHT
GRN/YEL
WHT/RED
BLU/YEL
GRN
GRN
RED/BLU
PPL
PPL
PPL
PPL
G352
L402
2
12
11
P
P
P
Audio
"G-1"
P/S
Cont.M
"F-4"
Navigation
"G-4"
GW
GY
WR
GRN/RED
RED/BLU
GRN
GRN
RED/BLU
HVAC
control unit
"E-1"
HVAC
control unit
"B-3"
Rear end
door lock
switch
"B-5"
Hatchback
L346
E
B
HVAC
Cont.M
"E-2"
HVAC
Cont.M
"B-3"
J/C
J/C
E
B
L347
B
E
B
GRN
RED/BLU
RED/BLU
GRN
RED/BLU
BY
GR
RB
G
RB
G
RB
G
RB
Trunk
room lock
solenoid
"B-5"
Sedan
Rear end
DL
Solenoid
"B-5"
Hatchback
DL
Dr
"B-5"
DL
Pas
"B-5"
Rear
DL
Motor (R)
"B-5"
Rear
DL
Motor (L)
"B-5"
I7RW0A910927-04

Ⓐ J/B side connector (BCM)

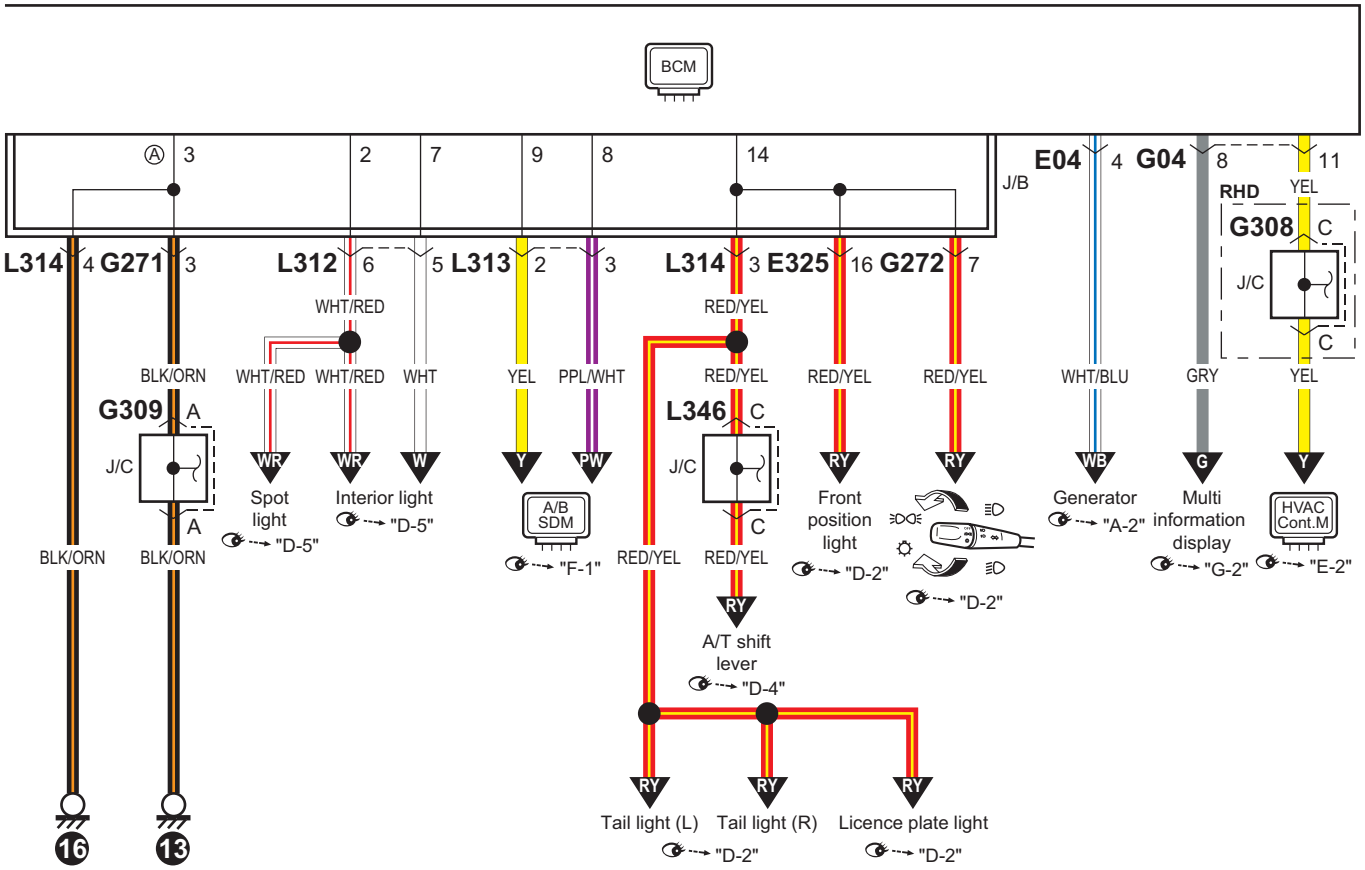

I7RW0A910928-03

A-8 Body Control System Circuit Diagram (Taiwan)

S7RW0A910E014

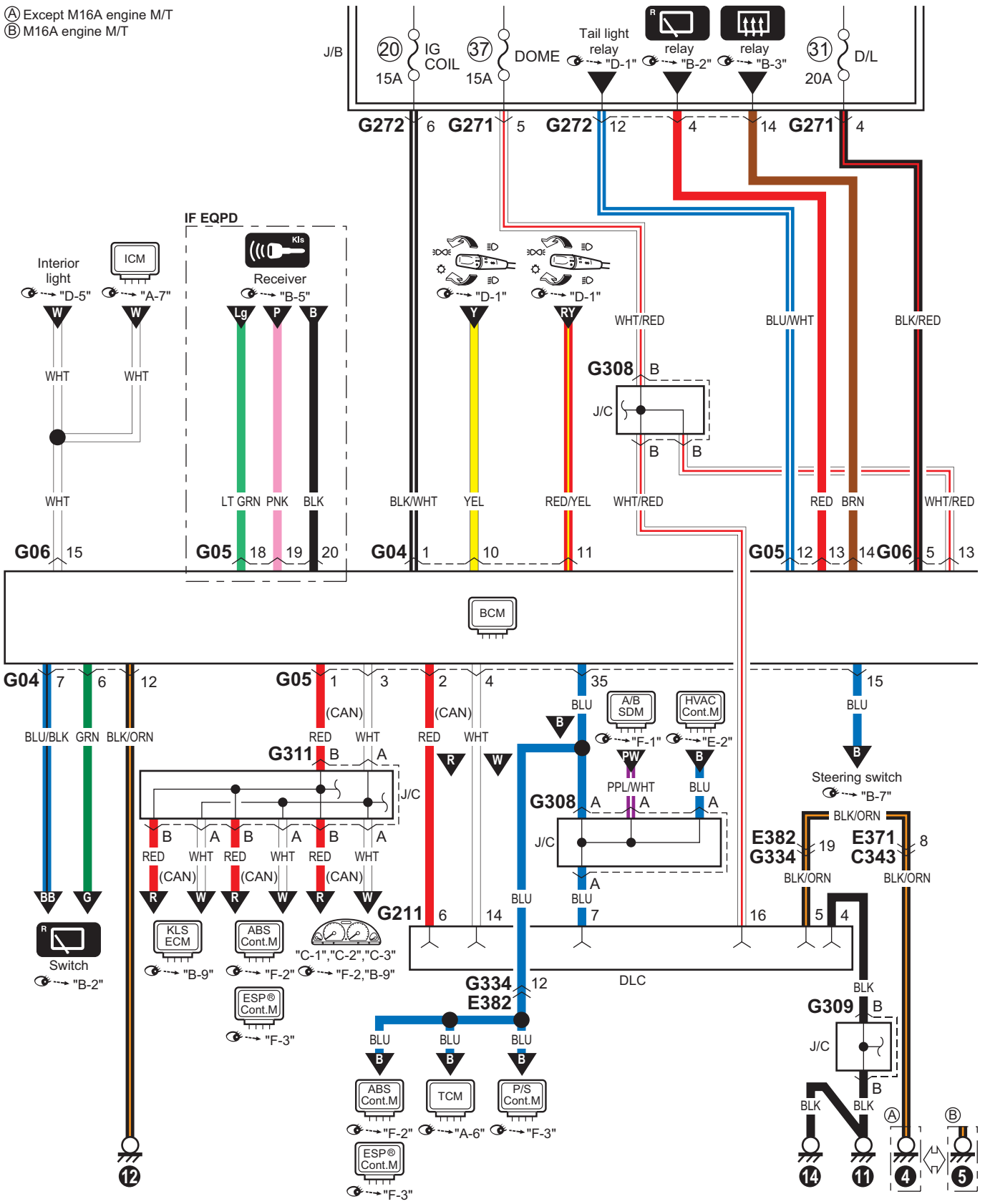

I7RW0A910929-03

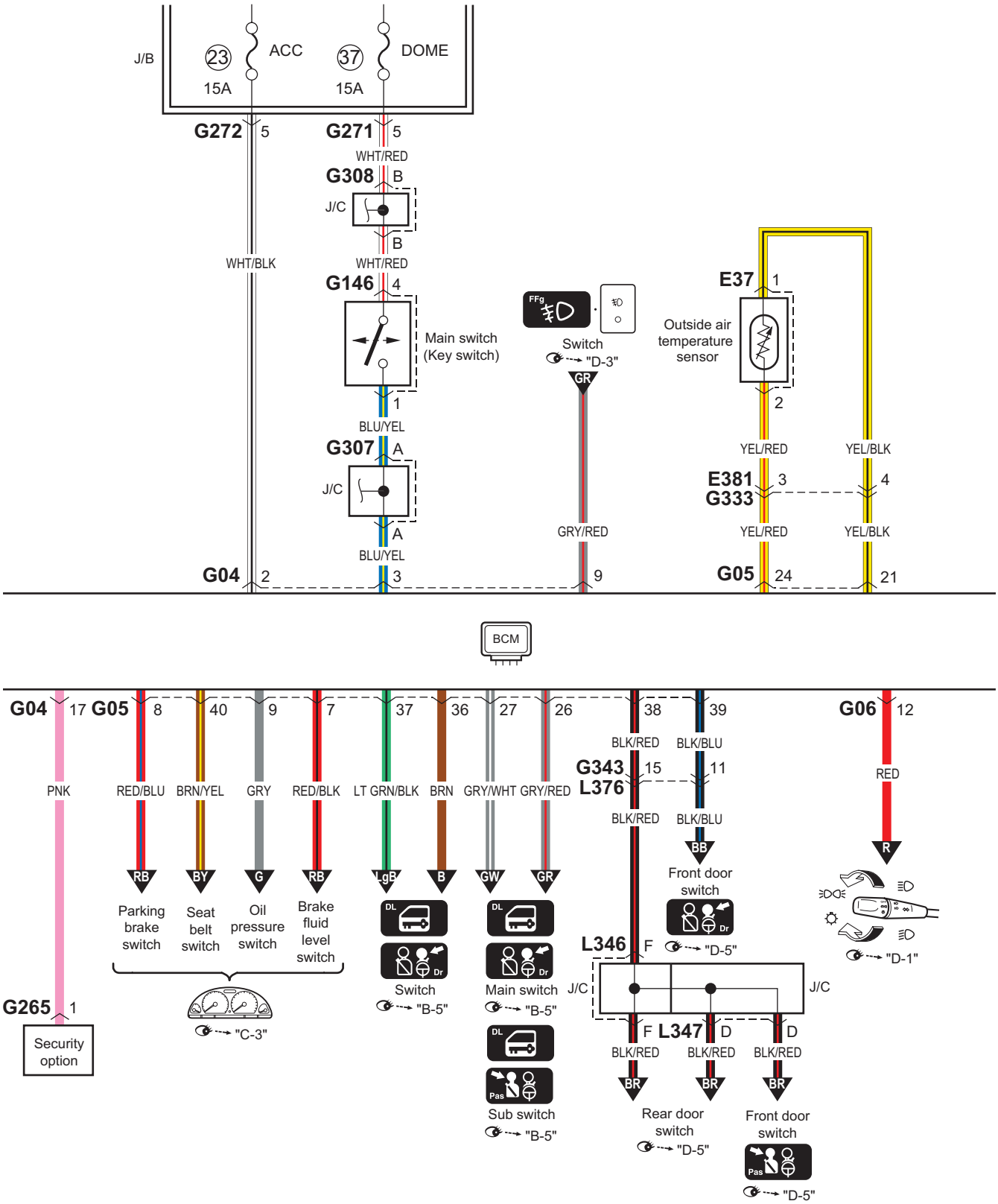

I7RW0A910930-04

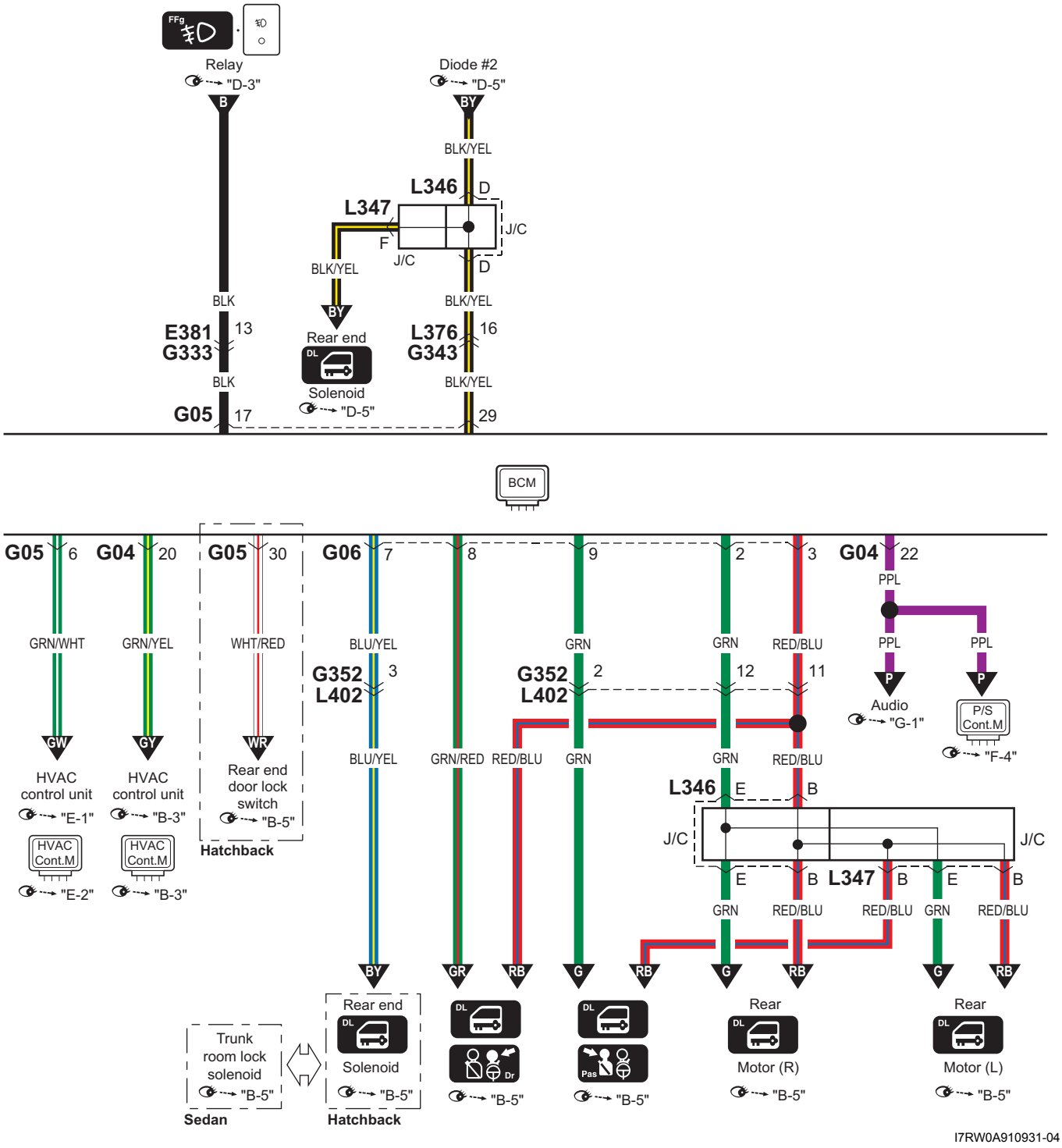

I7RW0A910931-04

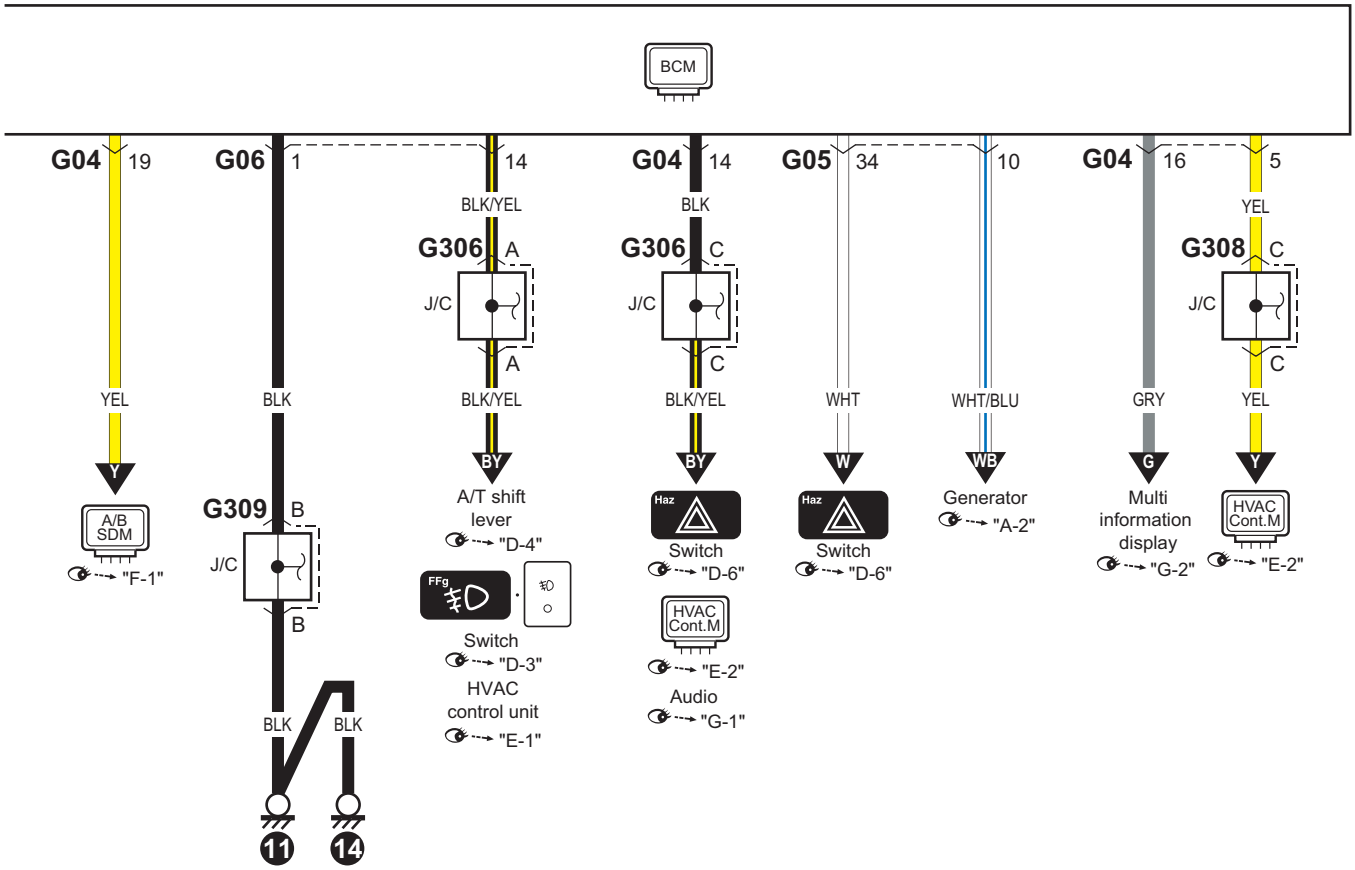

I7RW0A910932-03

A-10 4WD Control System (Except Taiwan)

S7RW0A910E015

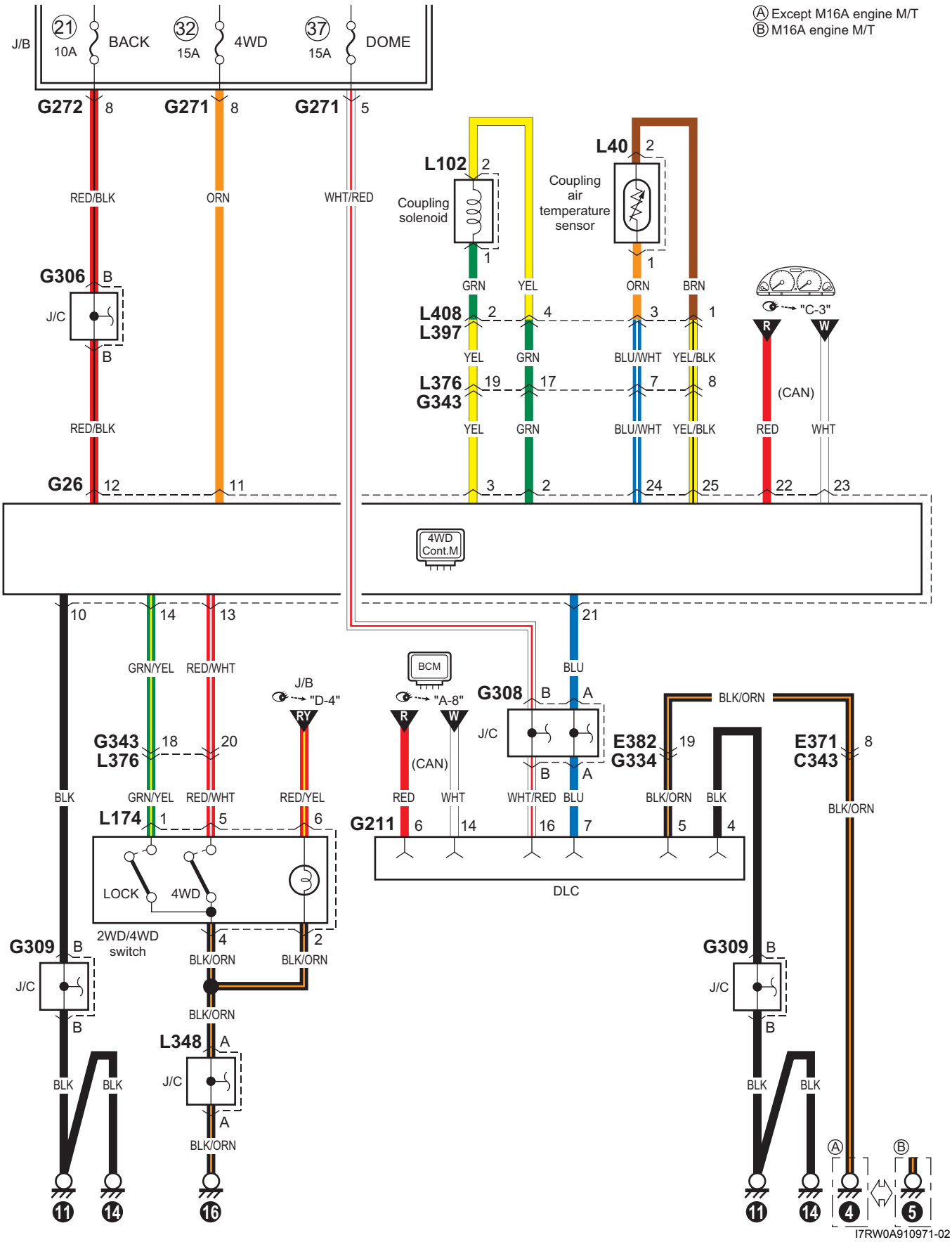

B-1 Windshield Wiper and Washer Circuit Diagram

S7RW0A910E016

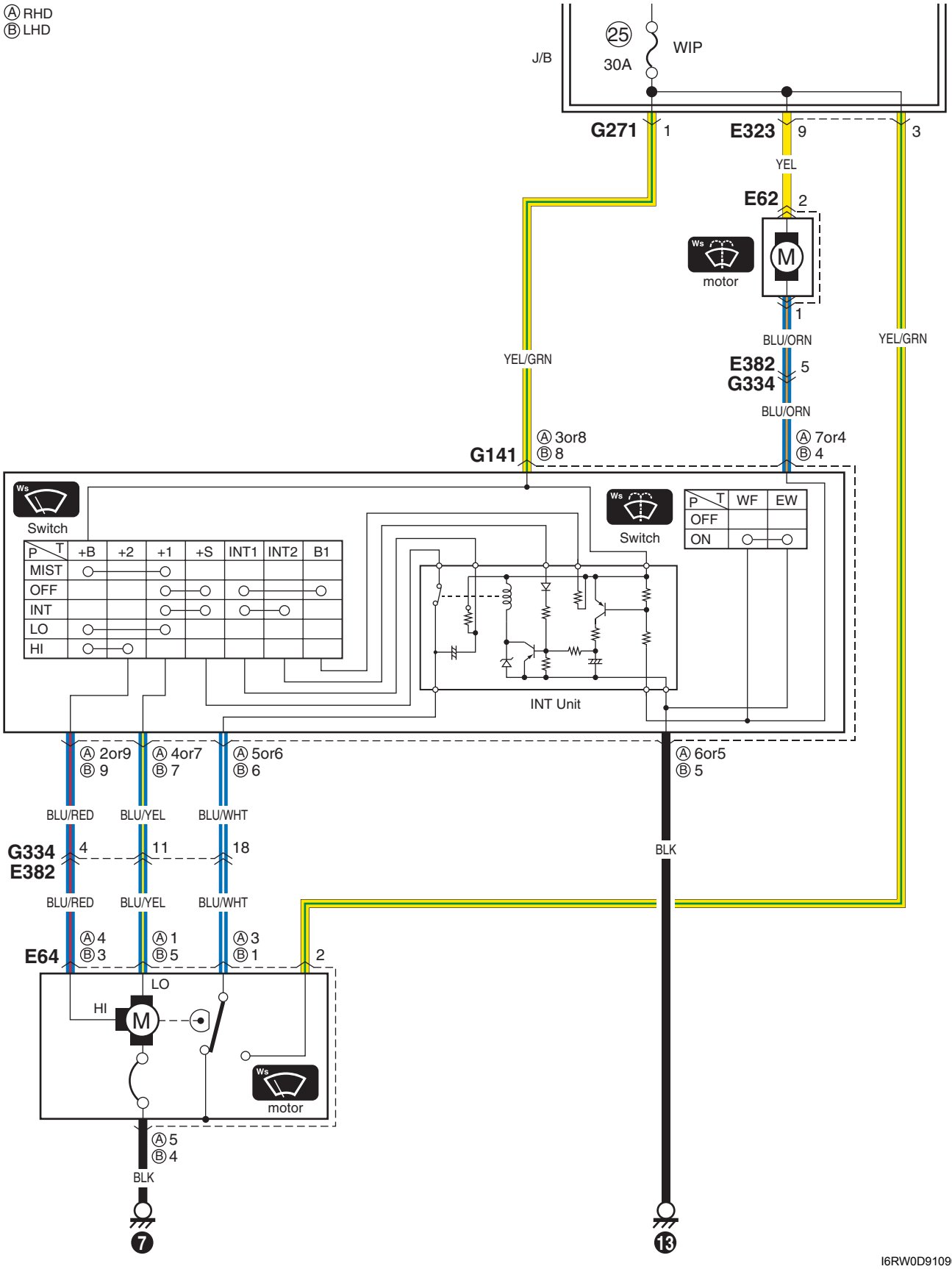

I6RW0D910909-02

B-2 Rear Wiper and Washer Circuit Diagram (Except Taiwan)

S7RW0A910E017

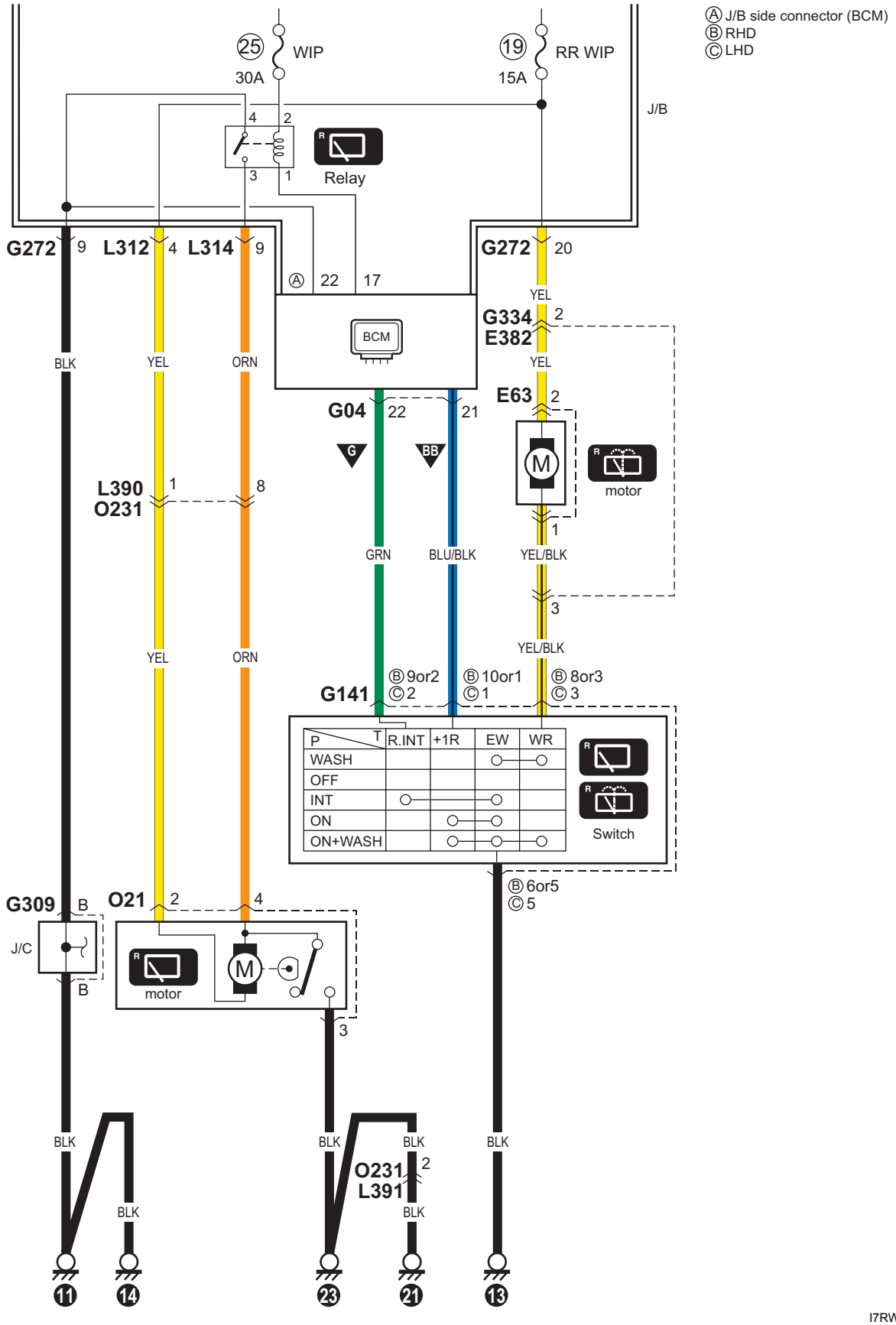

I7RW0A910972-03

B-2 Rear Wiper and Washer Circuit Diagram (Taiwan)

S7RW0A910E018

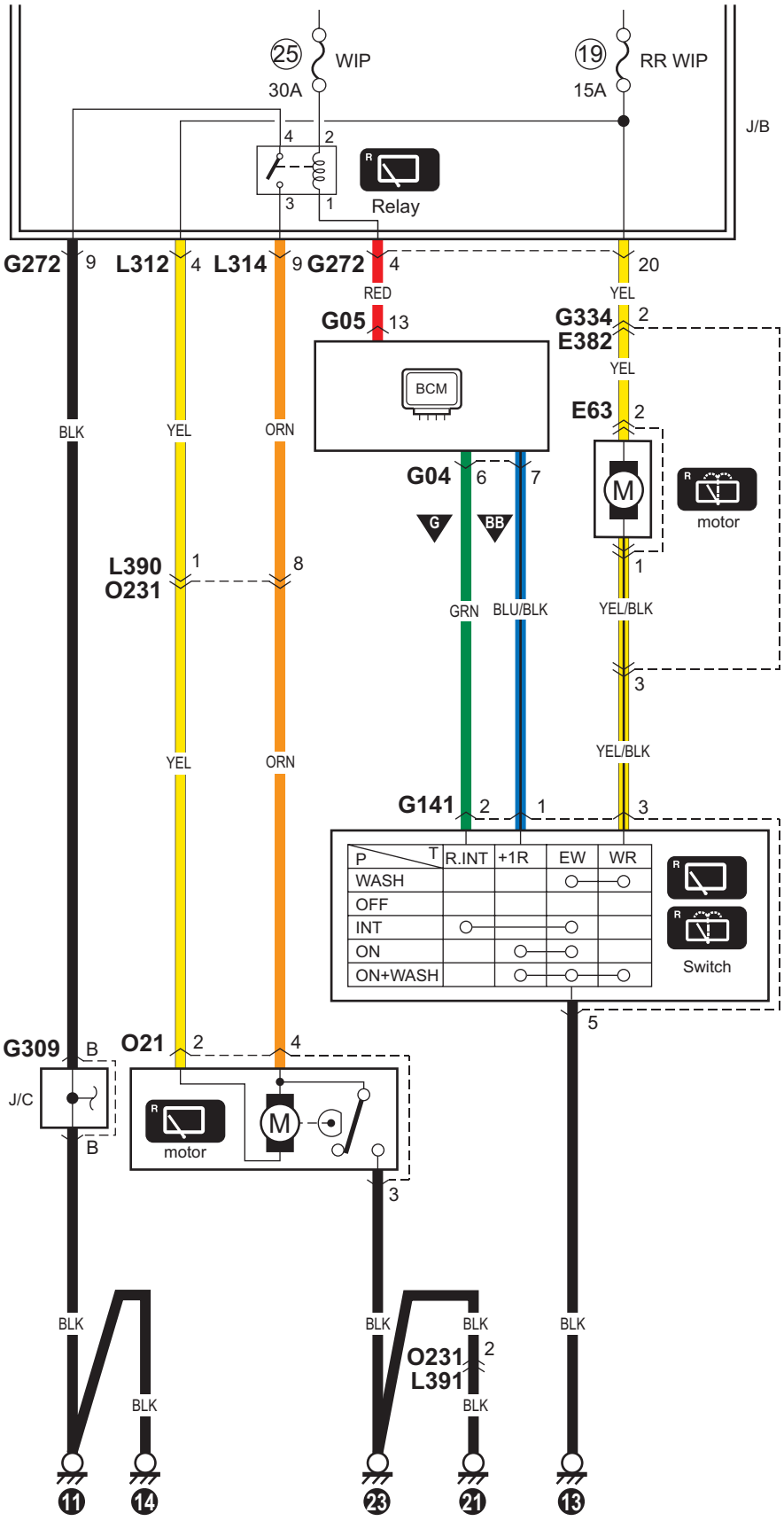

I7RW0A910973-02

B-3 Rear Defogger Circuit Diagram (Hatchback (Except Taiwan))

S7RW0A910E019

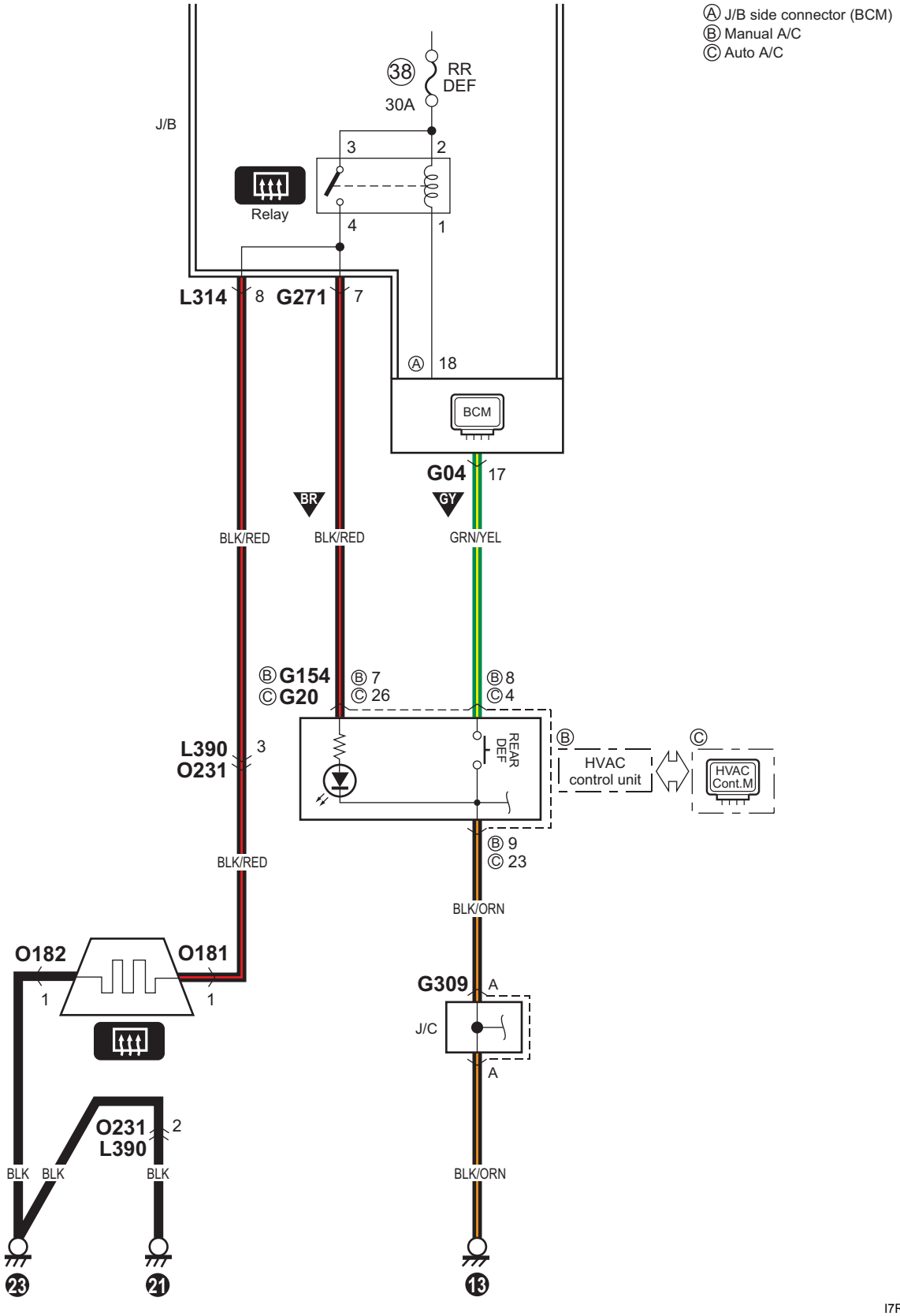

I7RW0A910974-02

B-3 Rear Defogger Circuit Diagram (Hatchback (Taiwan))

S7RW0A910E020

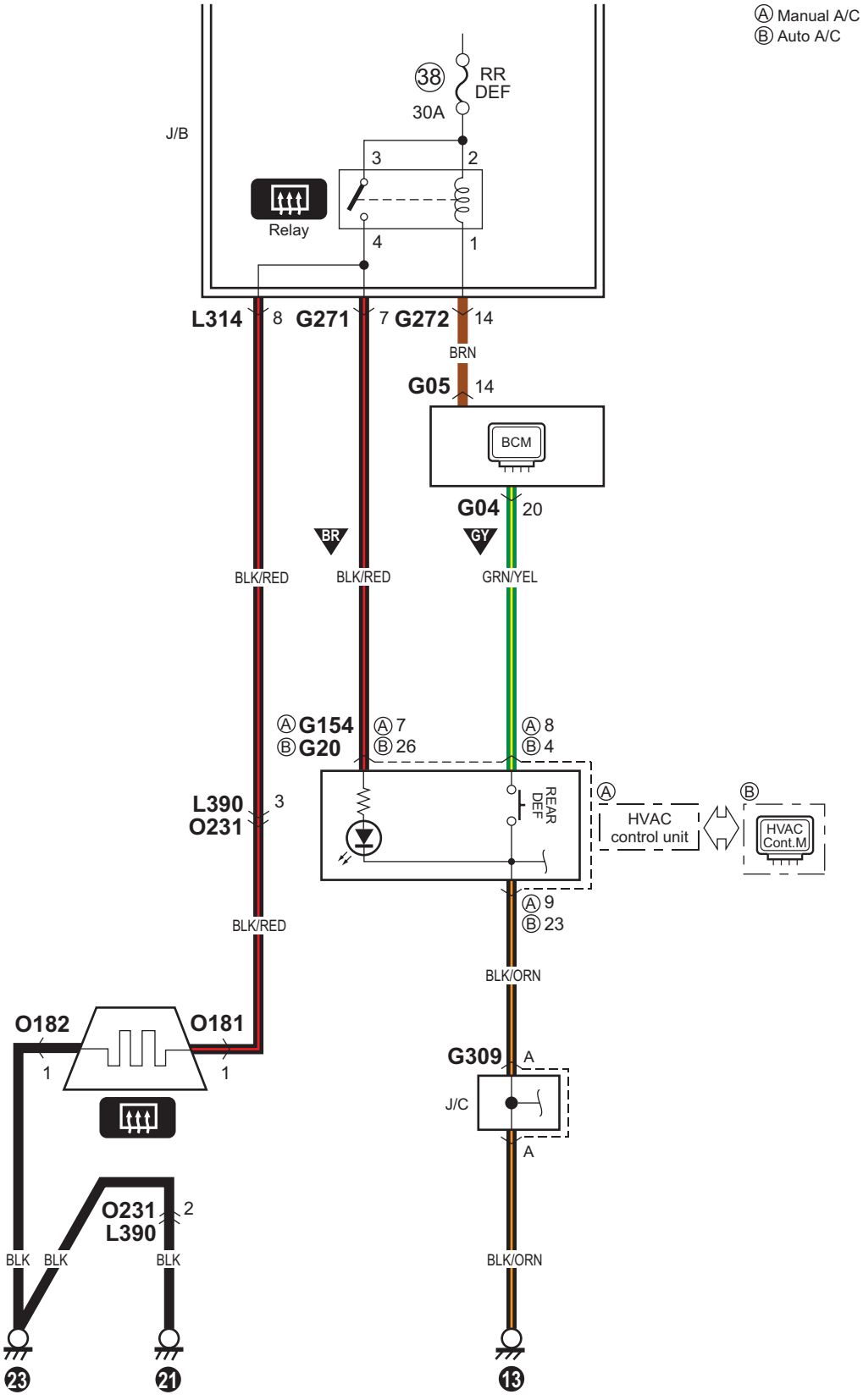

I7RW0A910975-02

B-3 Rear Defogger Circuit Diagram (Sedan)

S7RW0A910E057

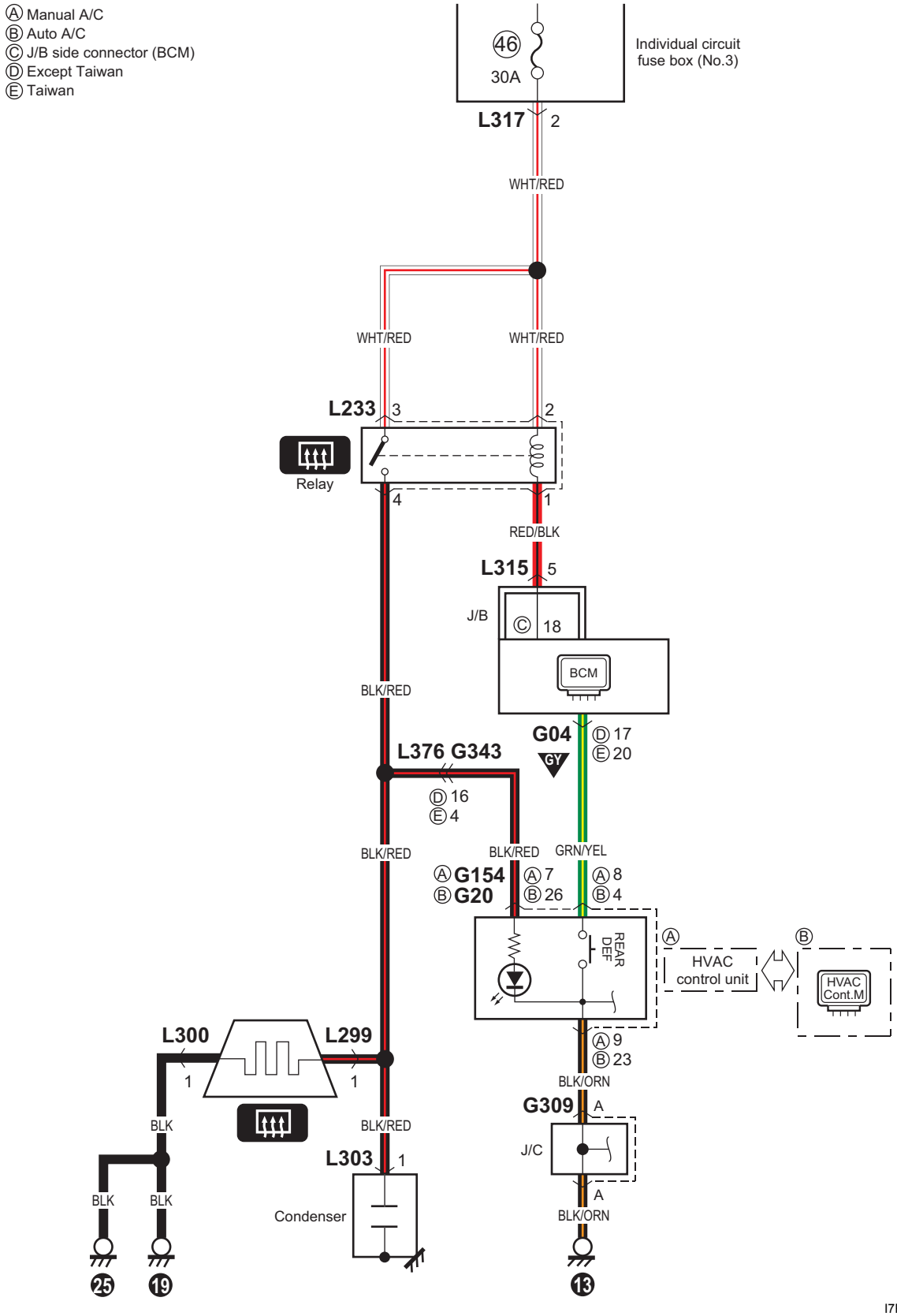

I7RW0A910976-04

B-4 Power Window Circuit Diagram

S7RW0A910E021

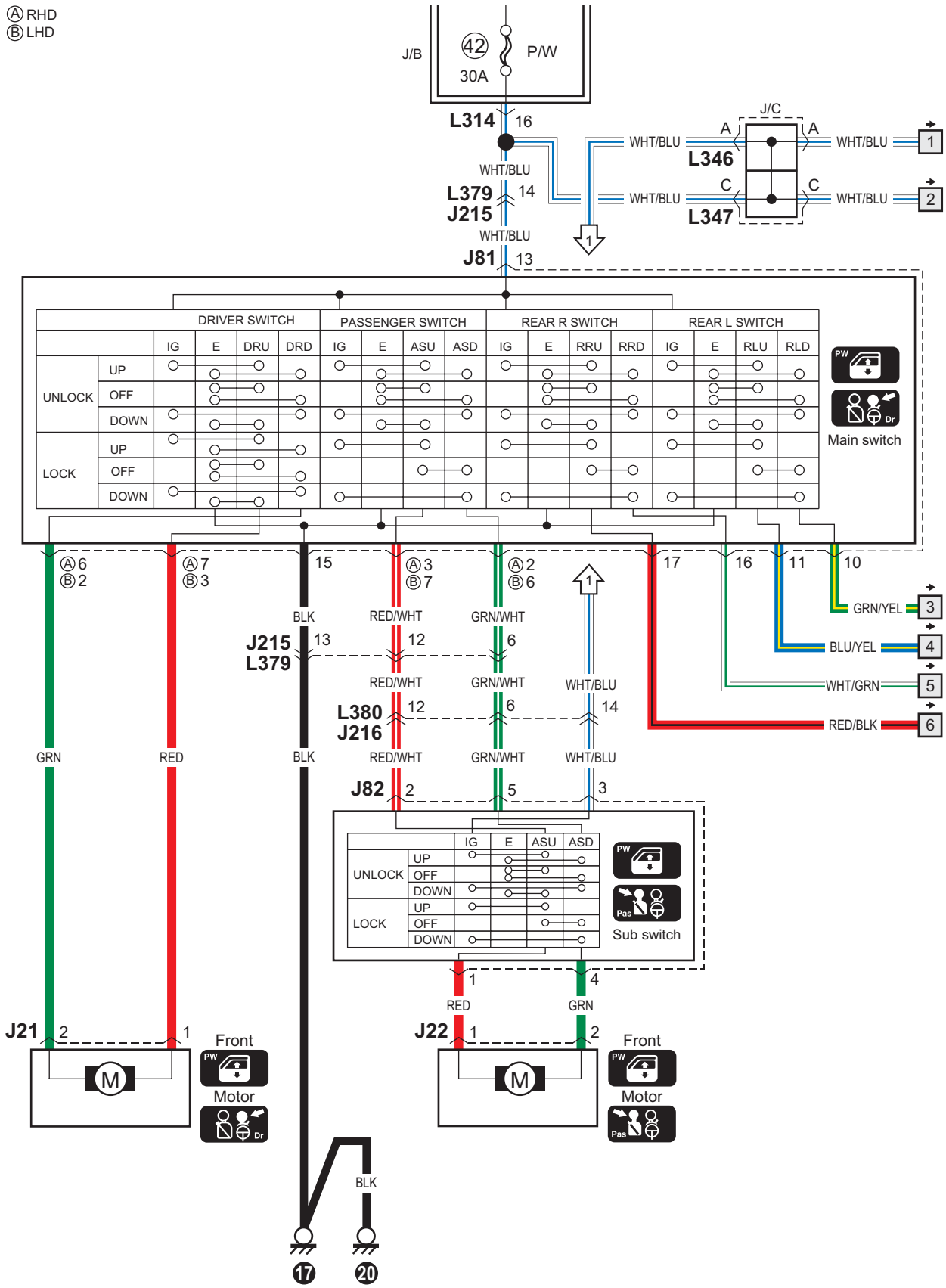

I7RW0A910933-02

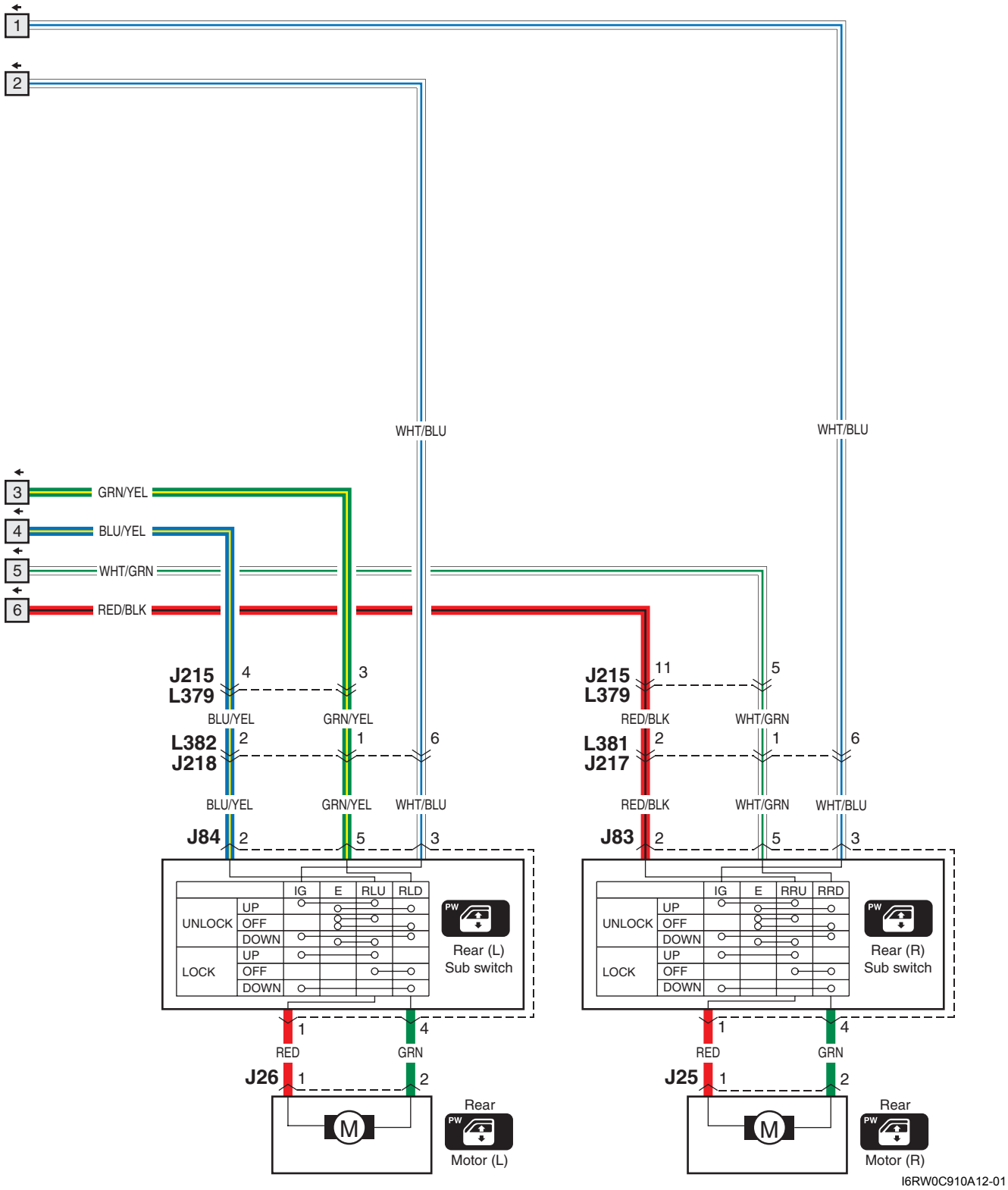

I6RW0C910A12-01

B-5 Power Door Lock Circuit Diagram (Except Taiwan)

S7RW0A910E022

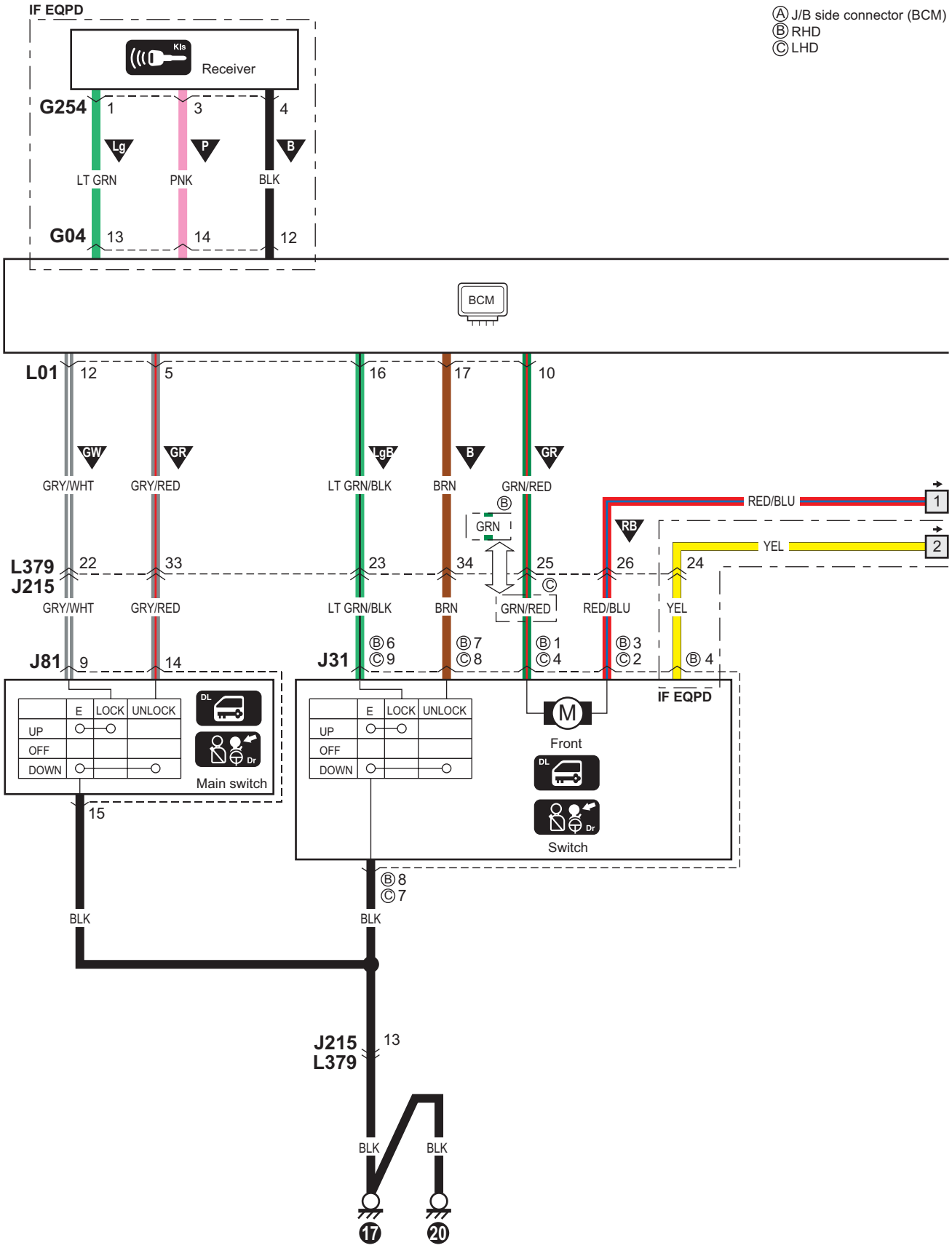

I7RW0A910977-02

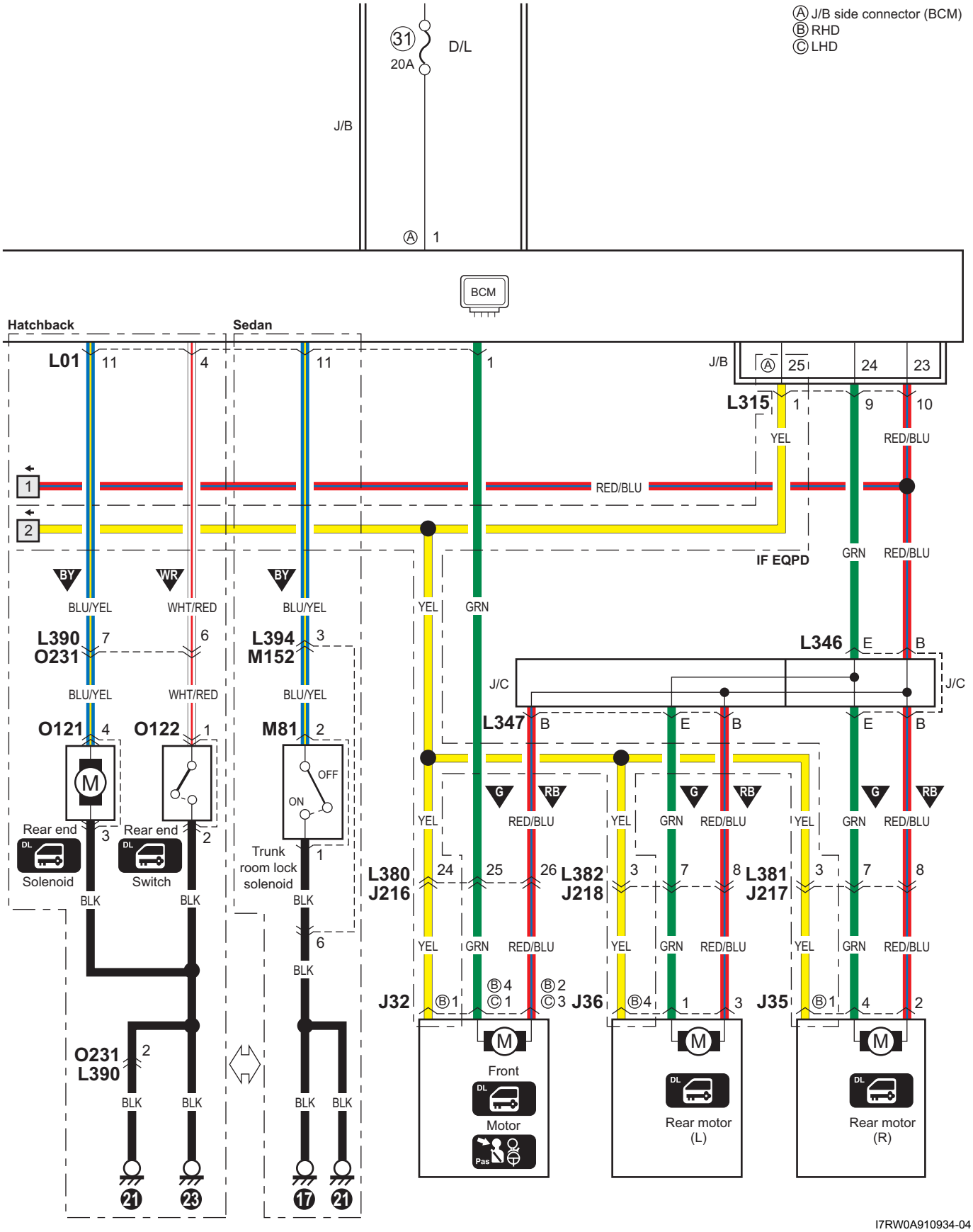

I7RW0A910934-04

B-5 Power Door Lock Circuit Diagram (Taiwan)

S7RW0A910E023

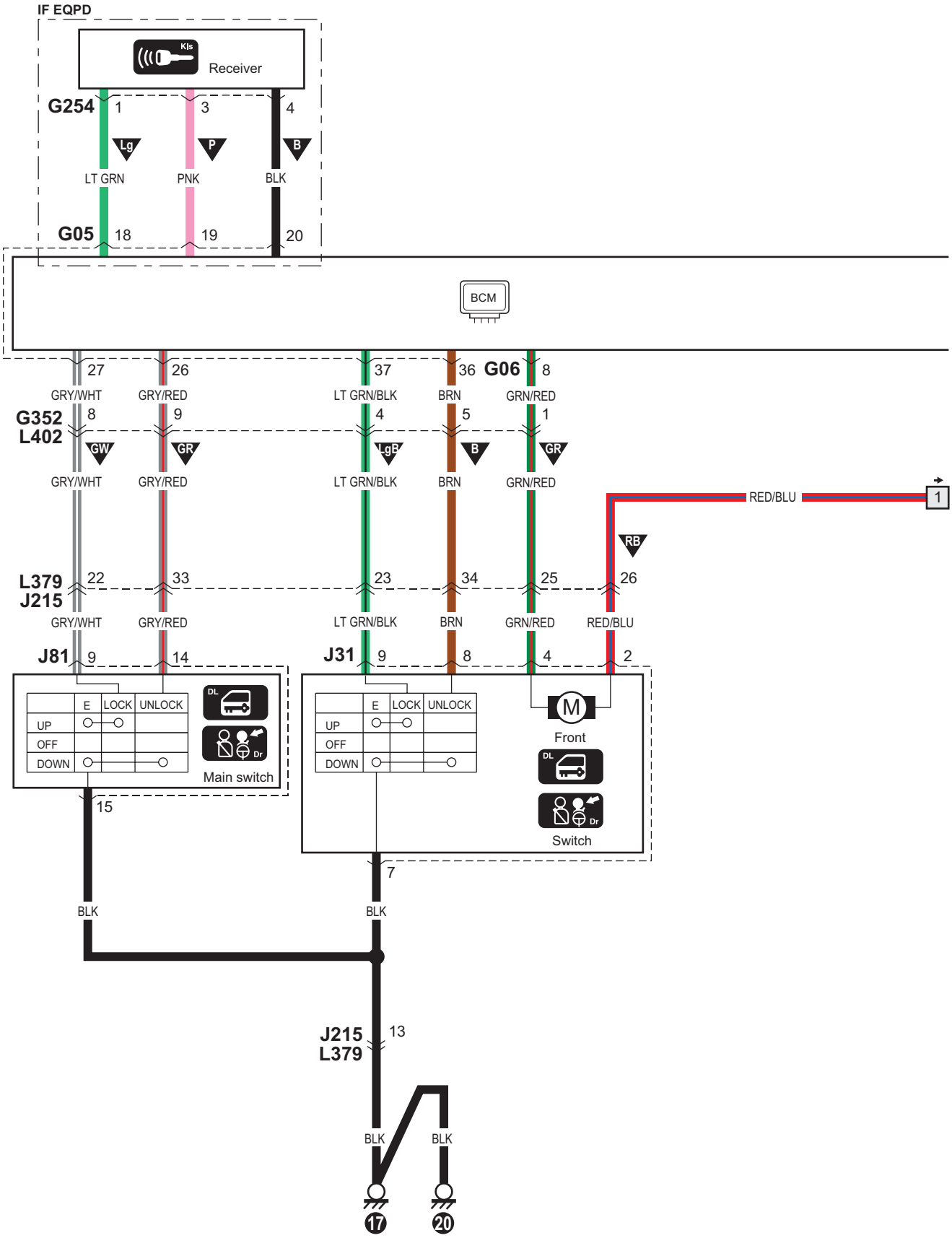

I7RW0A910978-03

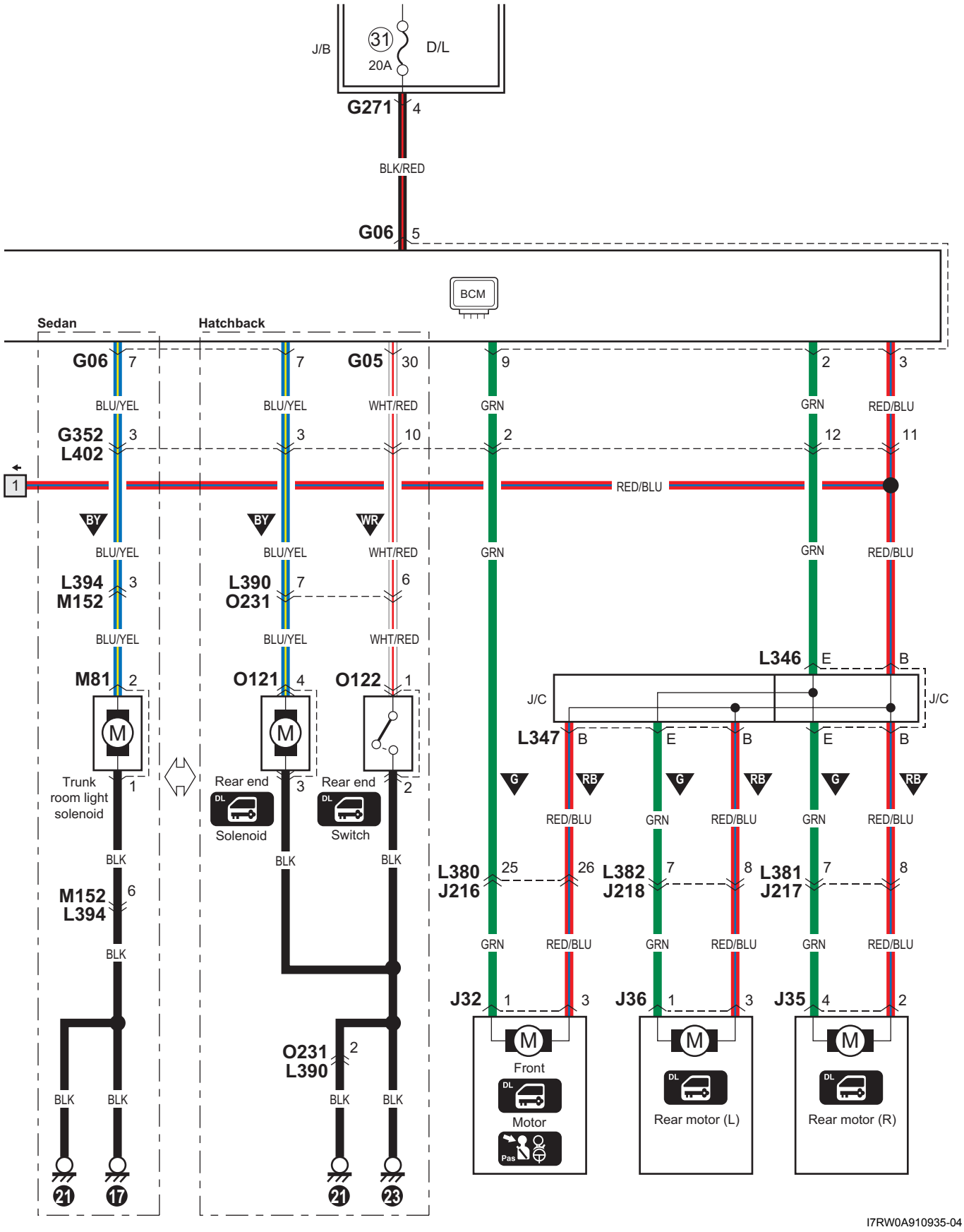
J/B
31
20A
D/L
G271
4
BLK/RED
G06
5
BCM
Sedan
Hatchback
G06
7
BLU/YEL
G352
L402
3
1
BY
BLU/YEL
L394
M152
3
BLU/YEL
M81
2
M
Trunk
room light
solenoid
1
BLK
M152
L394
6
BLK
BLK
BLK
21
17
7
BLU/YEL
3
BY
BLU/YEL
L390
O231
7
BLU/YEL
O121
4
M
Rear end
DL
Solenoid
3
BLK
O231
L390
2
BLK
BLK
21
G05
30
WHT/RED
10
WR
WHT/RED
6
WHT/RED
O122
1
Rear end
DL
Switch
2
BLK
BLK
23
9
GRN
2
GRN
GRN
L346
E
B
J/C
J/C
L347
B
E
B
E
B
G
RB
G
RB
G
RB
RED/BLU
GRN
RED/BLU
GRN
RED/BLU
L380
J216
25
26
L382
J218
7
8
L381
J217
7
8
GRN
RED/BLU
GRN
RED/BLU
GRN
RED/BLU
J32
1
3
J36
1
3
J35
4
2
M
Front
DL
Motor
Pas
M
DL
Rear motor (L)
M
DL
Rear motor (R)
2
3
GRN
RED/BLU
12
11
RED/BLU
GRN
RED/BLU
I7RW0A910935-04

B-6 Power Mirror Circuit Diagram (Hatchback (Except Taiwan))

S7RW0A910E024

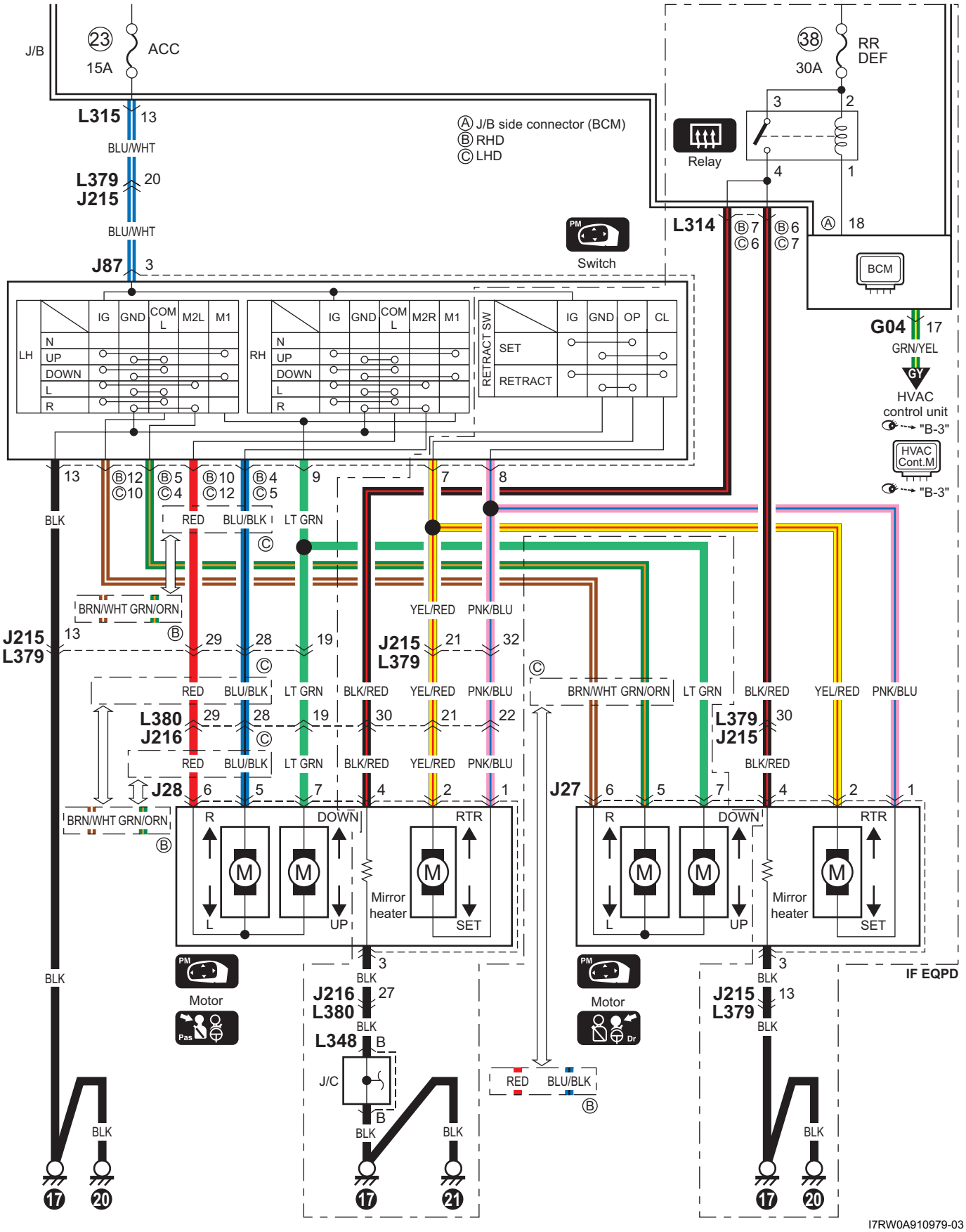

B-6 Power Mirror Circuit Diagram (Hatchback (Taiwan))

S7RW0A910E025

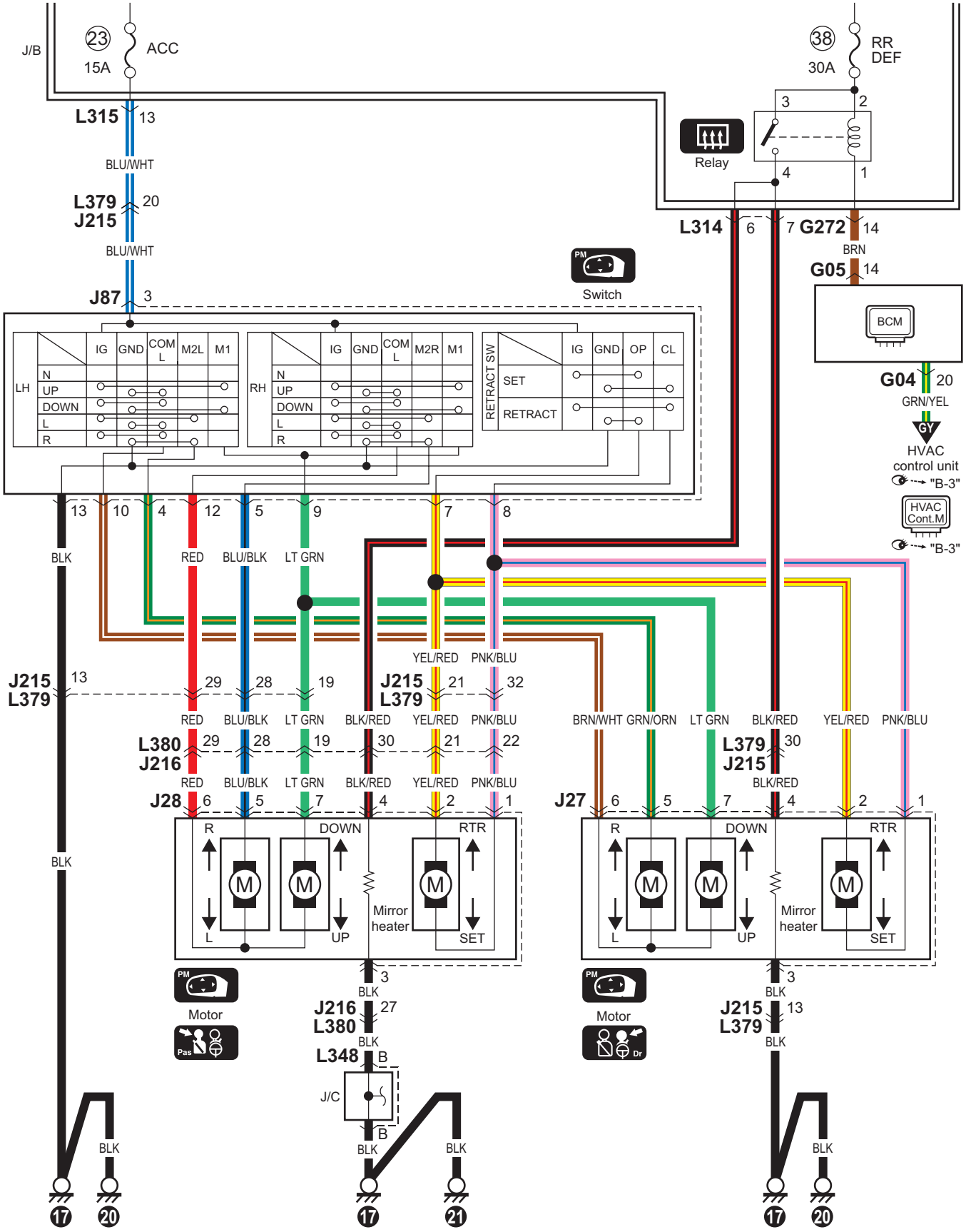

I7RW0A910980-03

B-6 Power Mirror Circuit Diagram (Sedan (Except Taiwan))

S7RW0A910E068

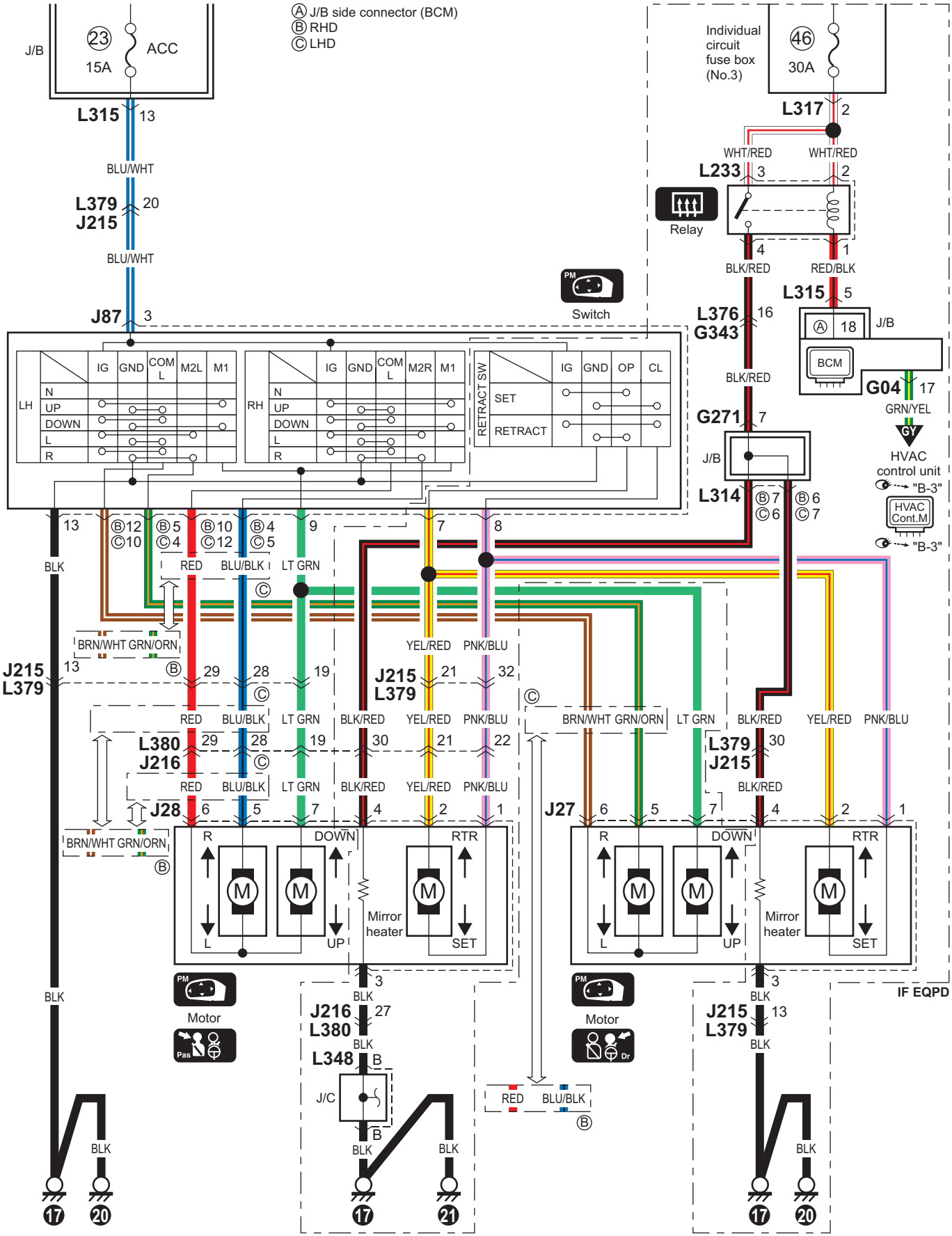

I7RW0A910A01-03

B-6 Power Mirror Circuit Diagram (Sedan (Taiwan))

S7RW0A910E069

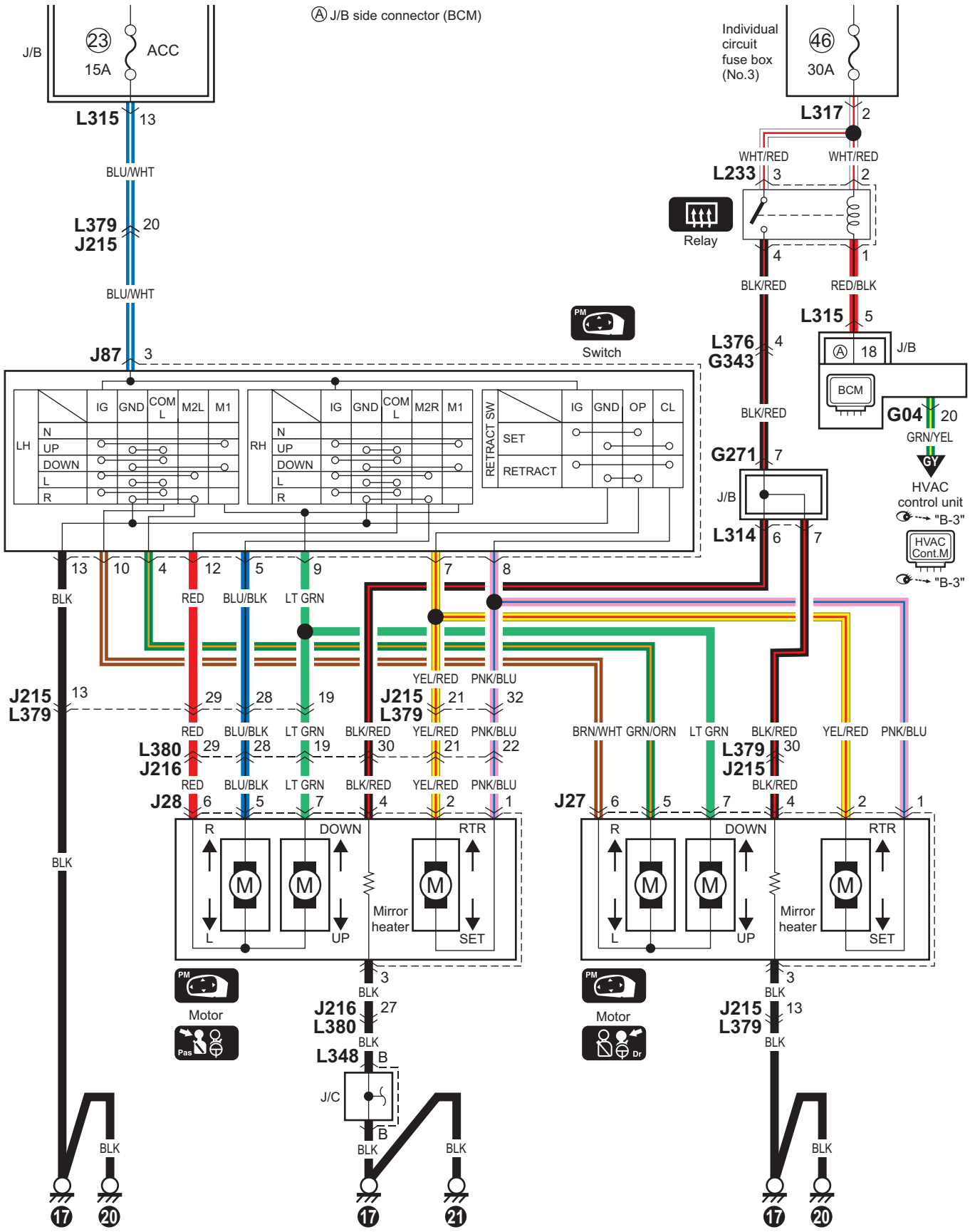

I7RW0A910A02-03

B-7 Horn Circuit Diagram

S7RW0A910E026

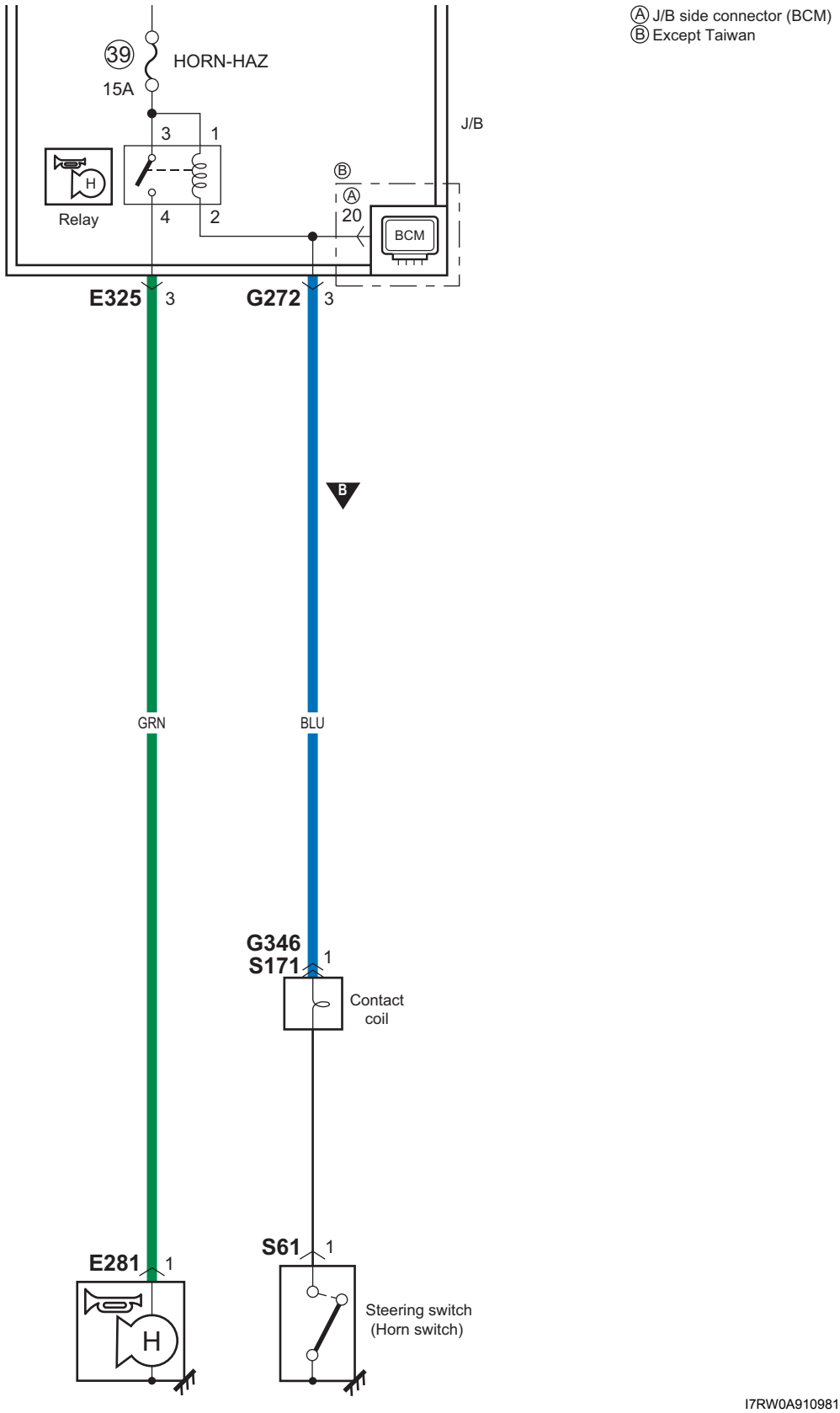

I7RW0A910981-02

B-8 Seat Heater Circuit Diagram

S7RW0A910E027

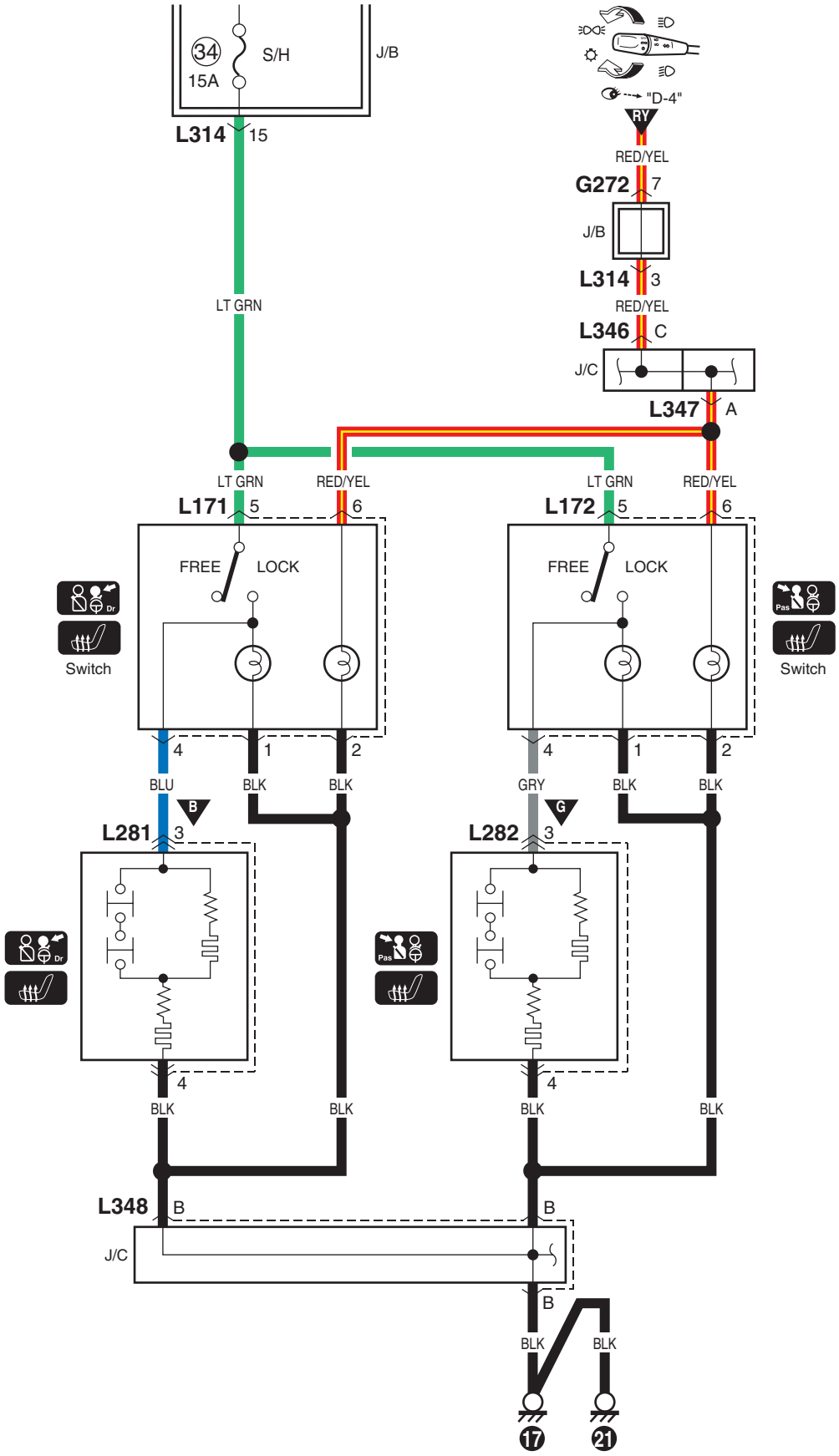

I6RW0D910913-01

B-9 Keyless Start System Circuit Diagram

S7RW0A910E028

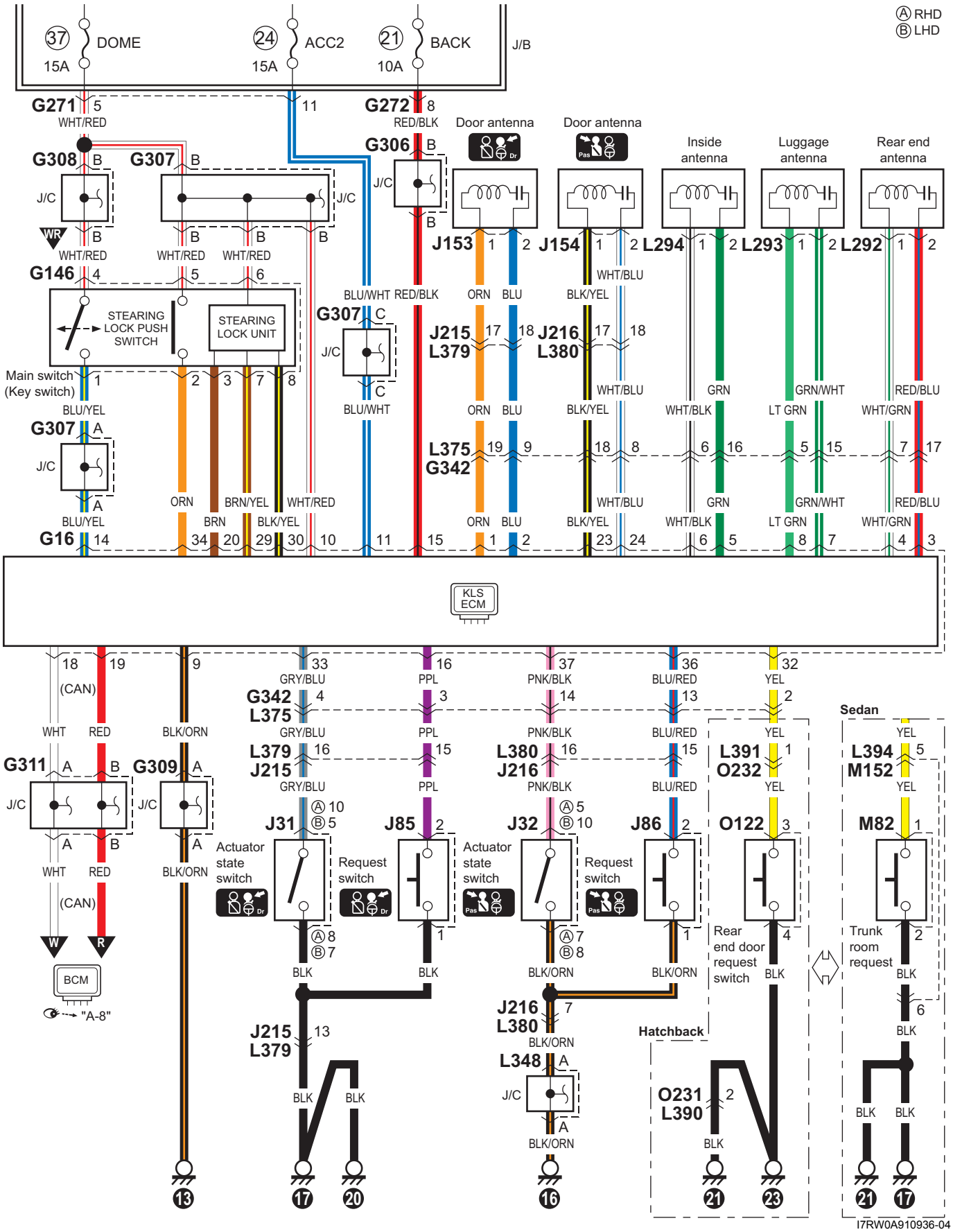

C-1 Combination Meter Circuit Diagram (Meter)

S7RW0A910E029

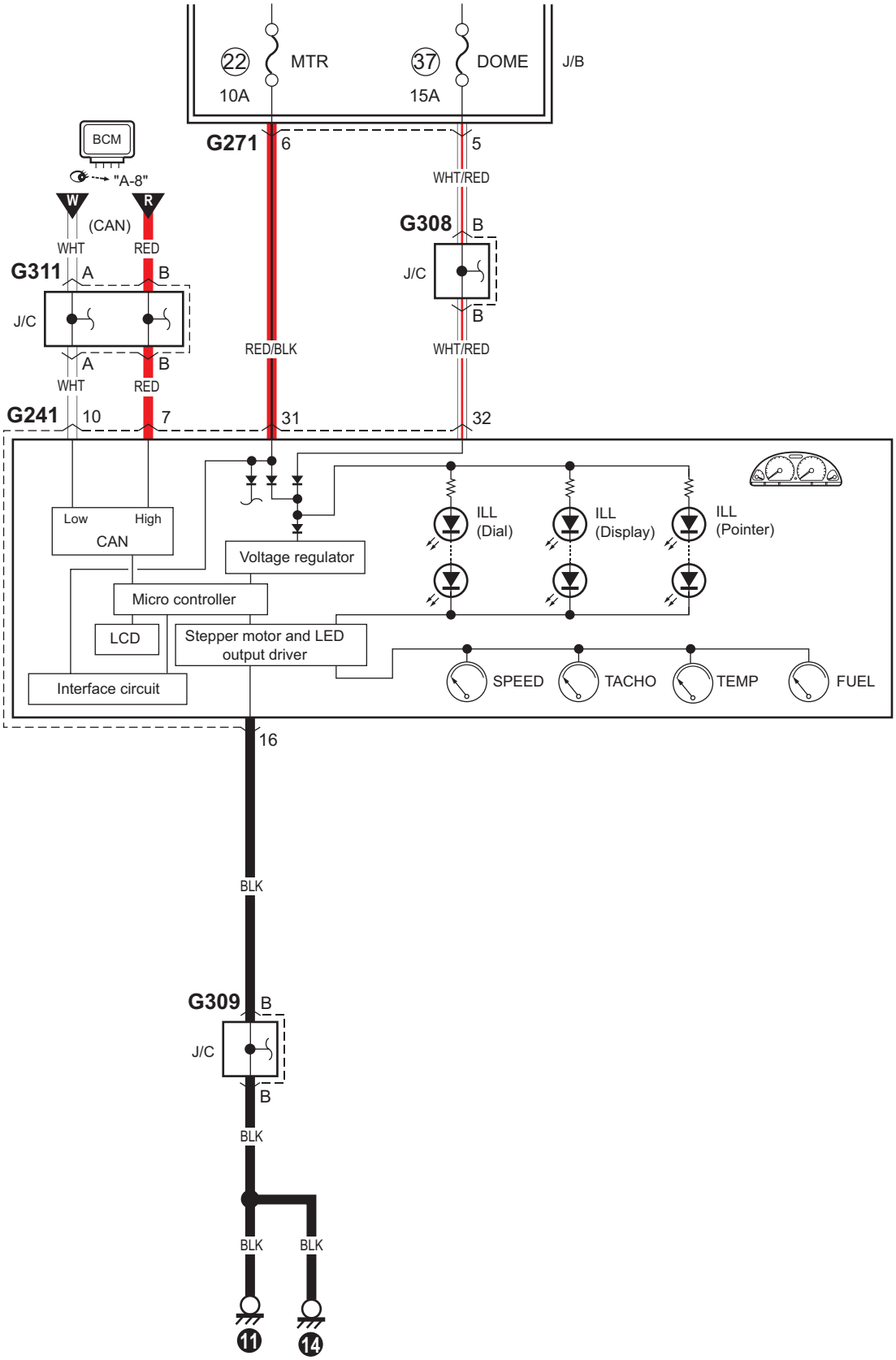

I7RW0A910937-03

C-2 Combination Meter Circuit Diagram (Indicator)

S7RW0A910E030

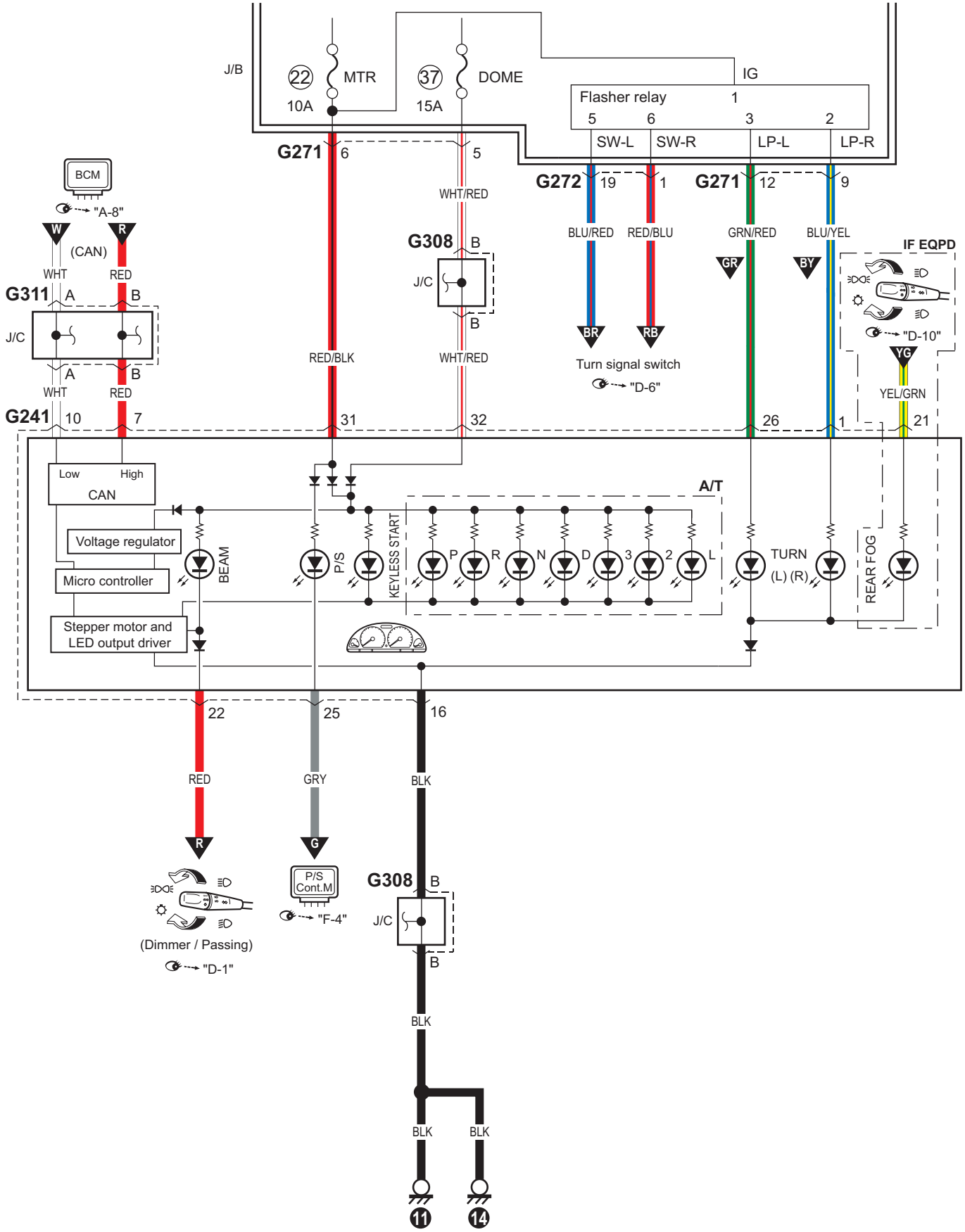

I7RW0A910938-03

C-3 Combination Meter Circuit Diagram (Warning Light)

S7RW0A910E031

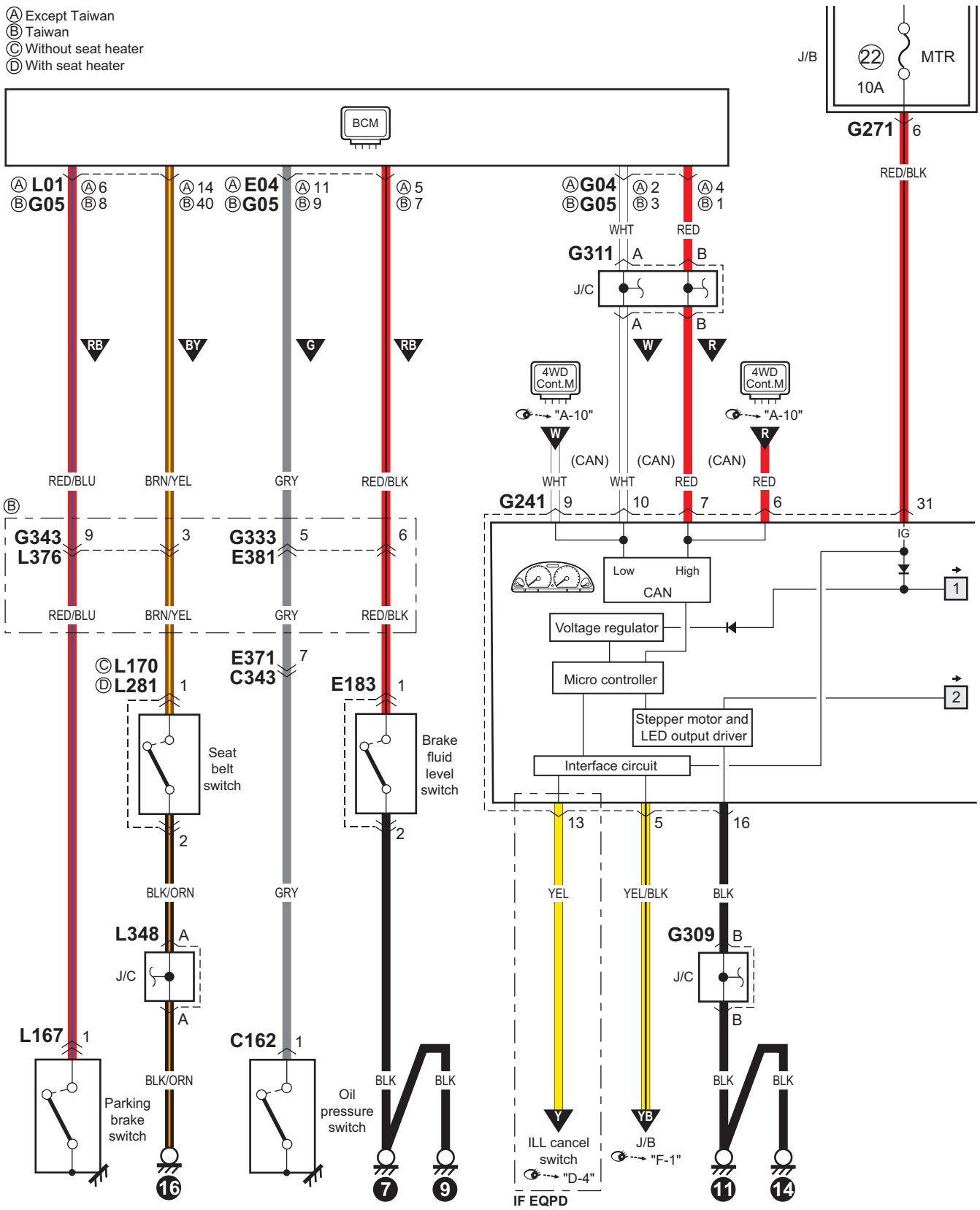

I7RW0A910939-03

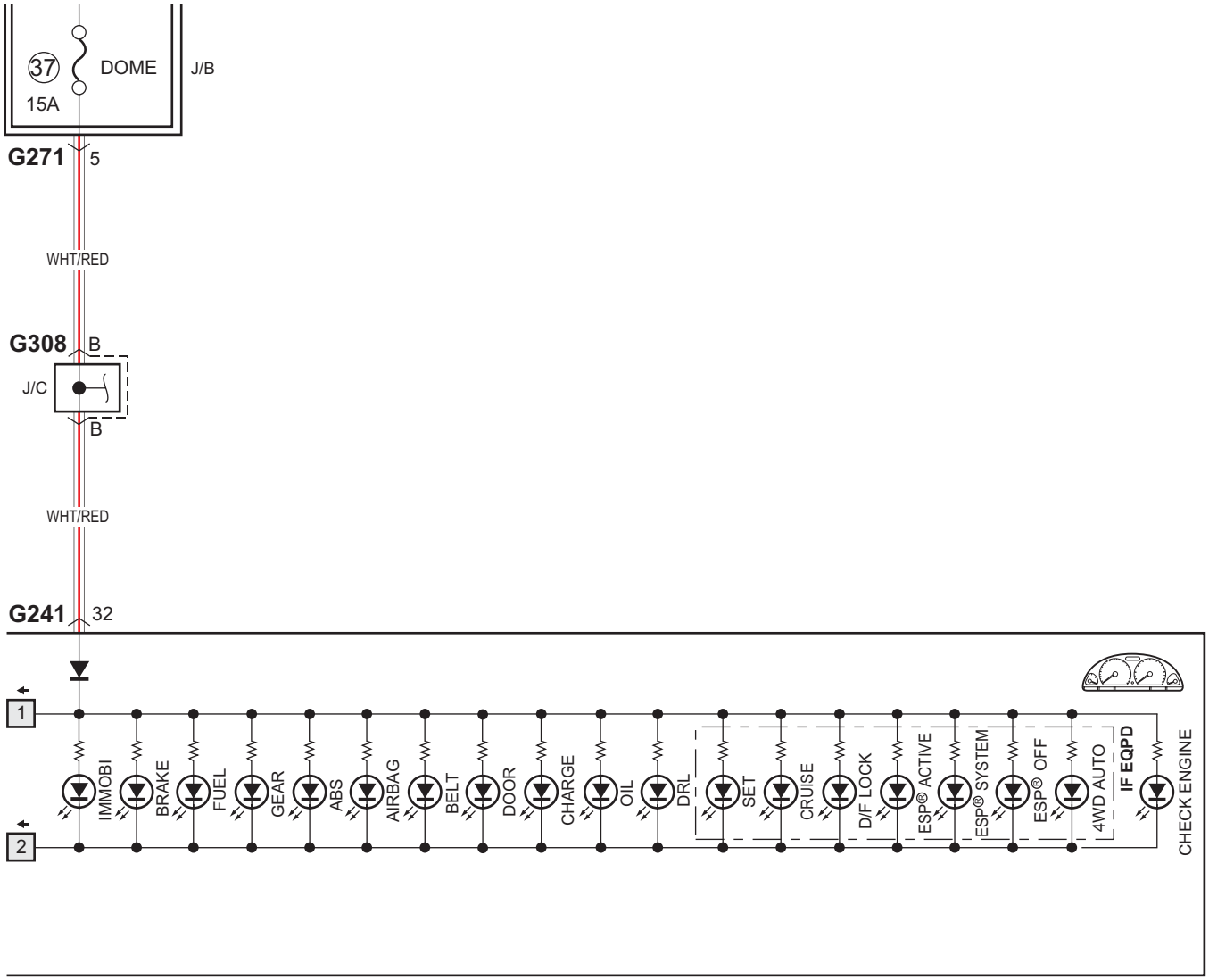

ESP® is a registered trademark of Daimler Chrysler AG.

I7RW0A910940-03

D-1 Headlight System Circuit Diagram (Except Taiwan)

S7RW0A910E032

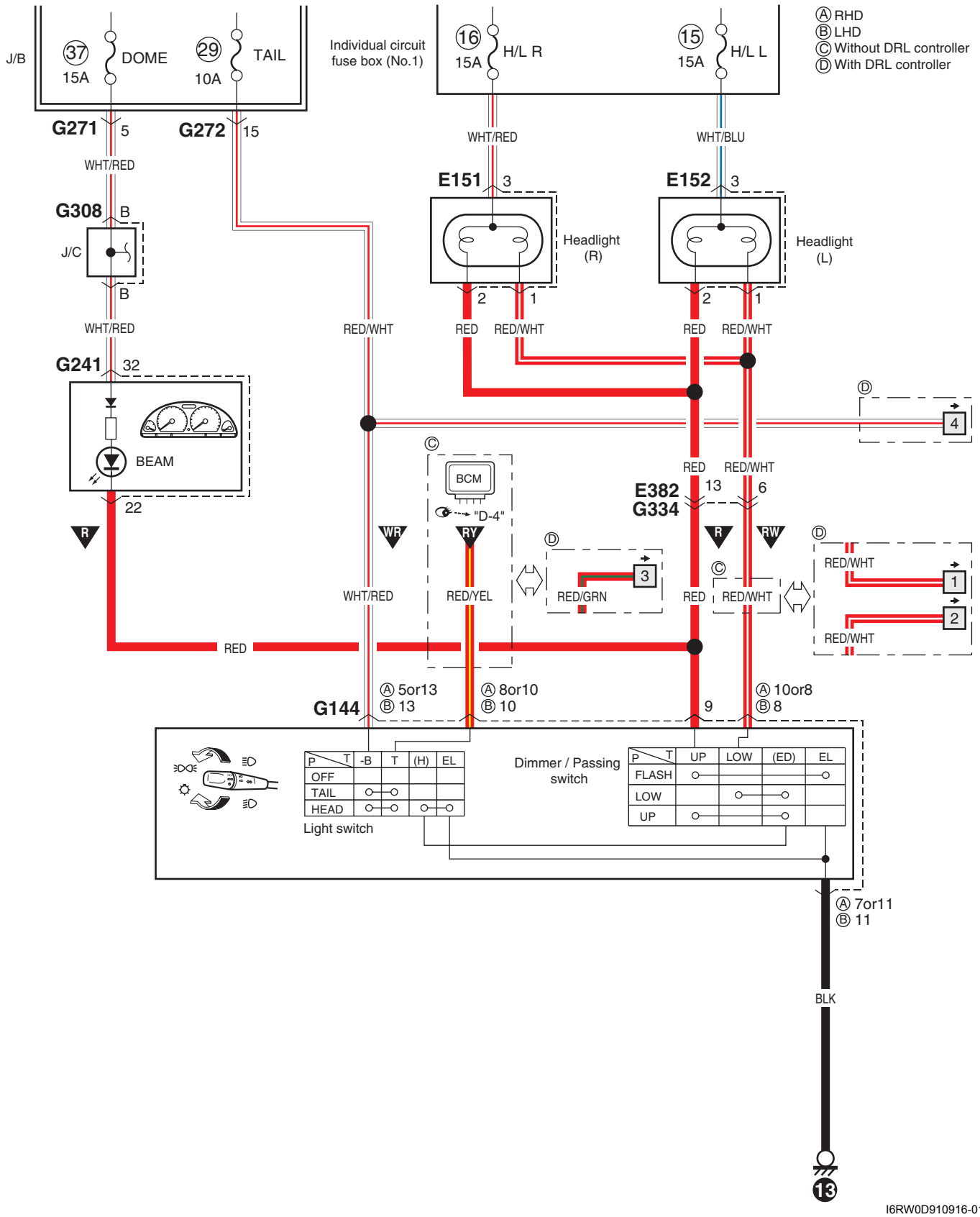

I6RW0D910916-01

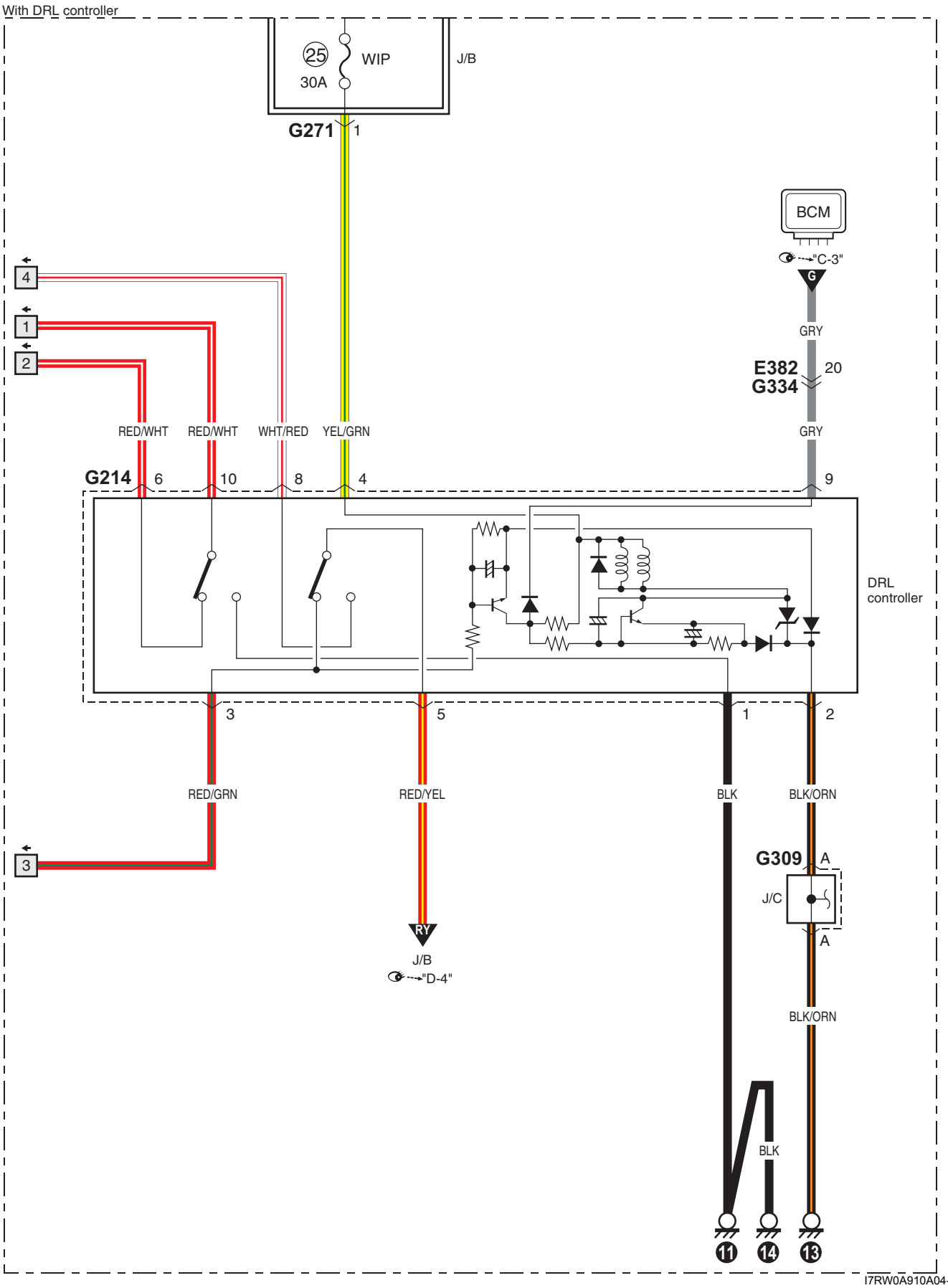

I7RW0A910A04-01

D-1 Headlight System Circuit Diagram (Taiwan)

S7RW0A910E033

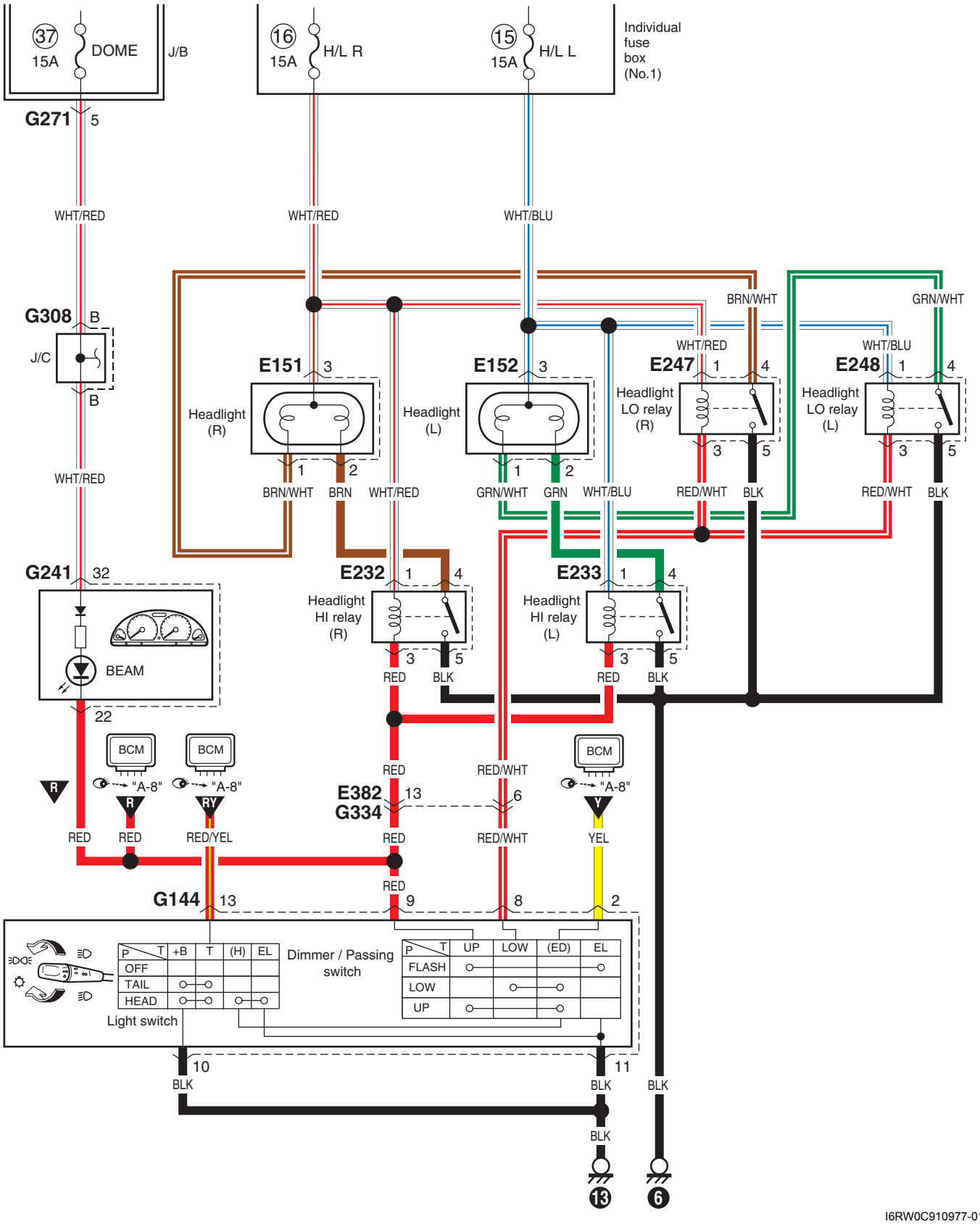

I6RW0C910977-01

D-2 Position, Tail and Licence Plate Light System Circuit Diagram (Hatchback (Except Taiwan))

S7RW0A910E034

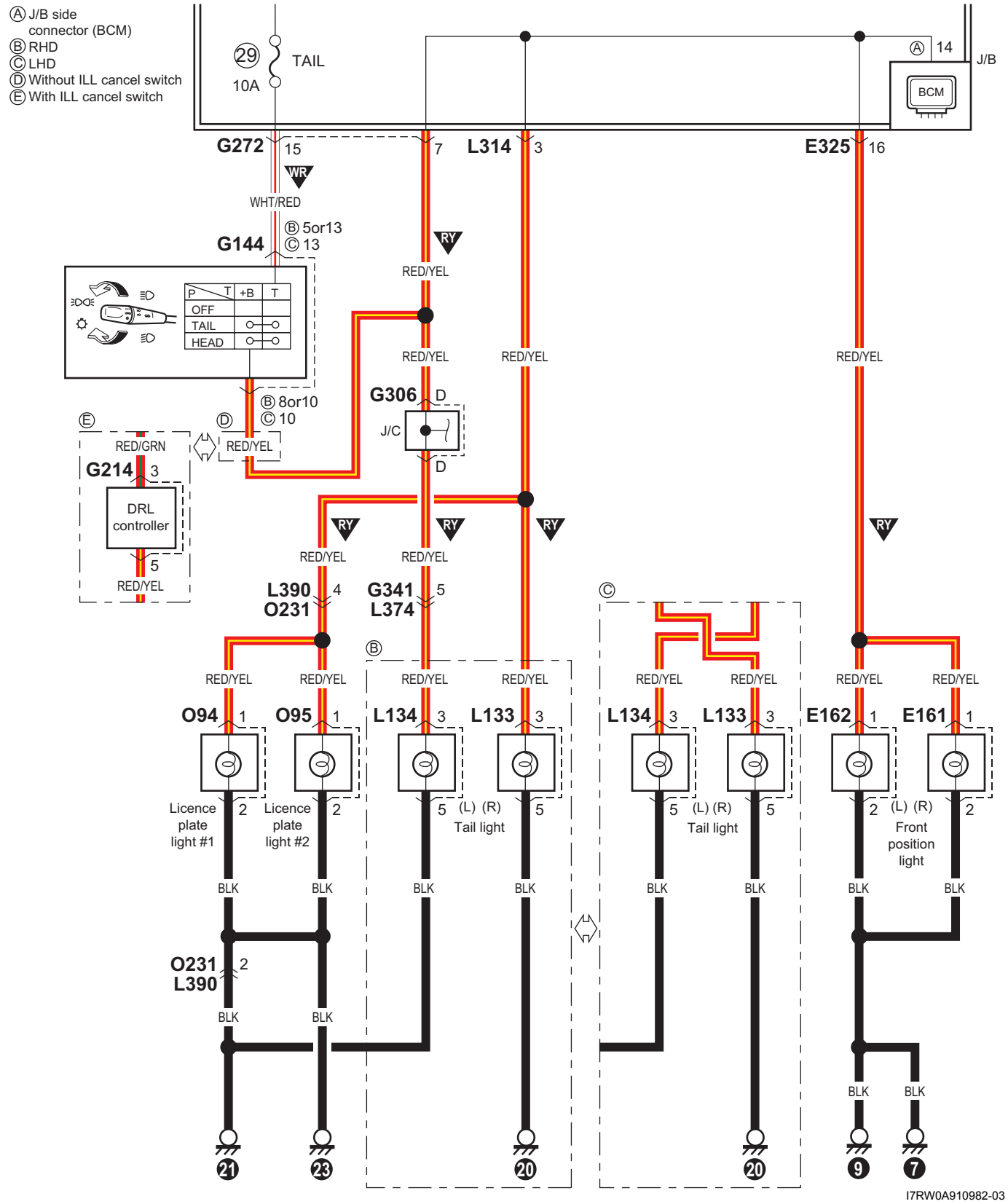

D-2 Position, Tail and Licence Plate Light System Circuit Diagram (Sedan (Except Taiwan))

S7RW0A910E064

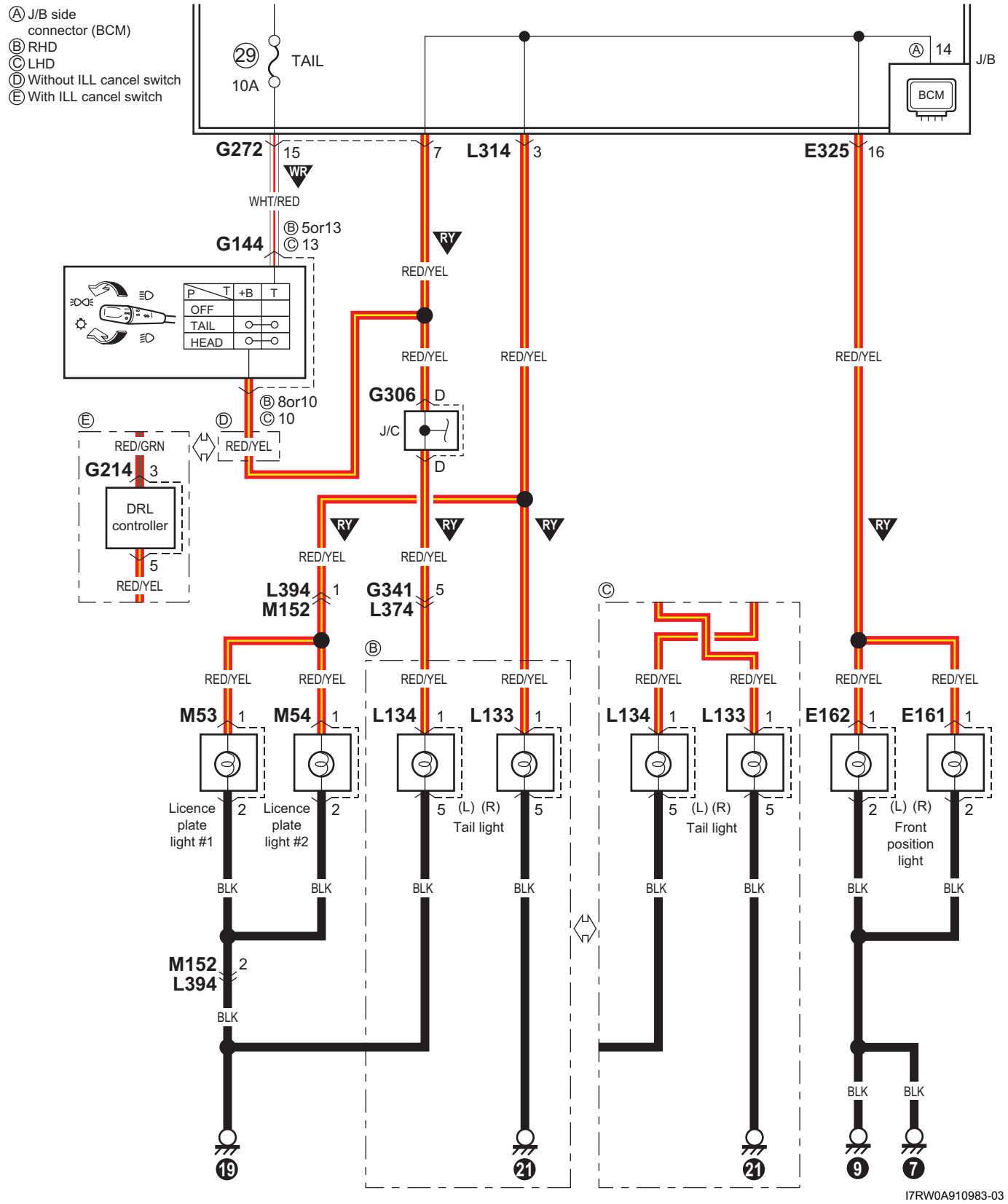

I7RW0A910983-03

D-2 Position, Tail and Licence Plate Light System Circuit Diagram (Hatchback (Taiwan))

S7RW0A910E035

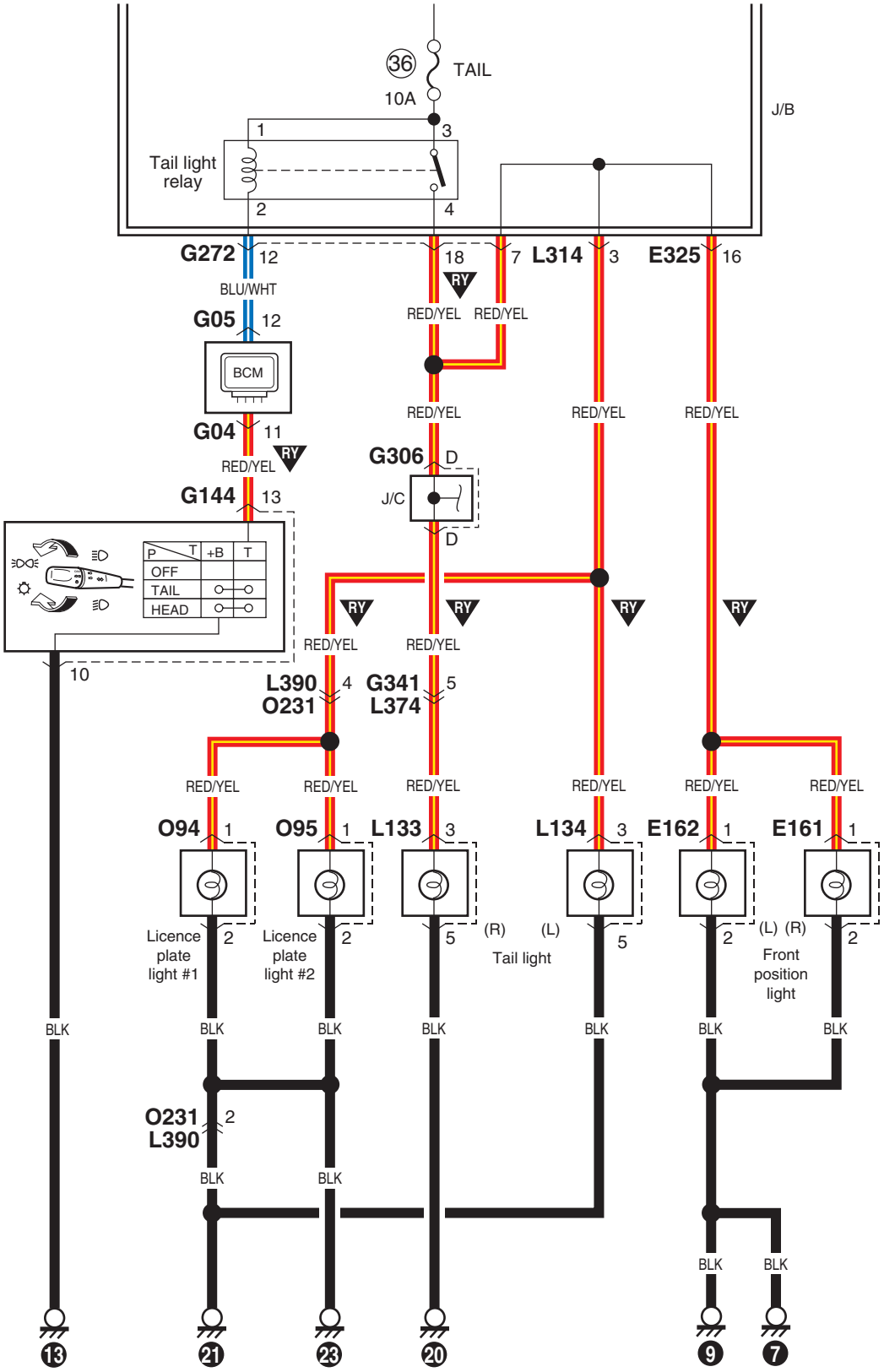

I6RW0C910980-01

D-2 Position, Tail and Licence Plate Light System Circuit Diagram (Sedan (Taiwan))

S7RW0A910E058

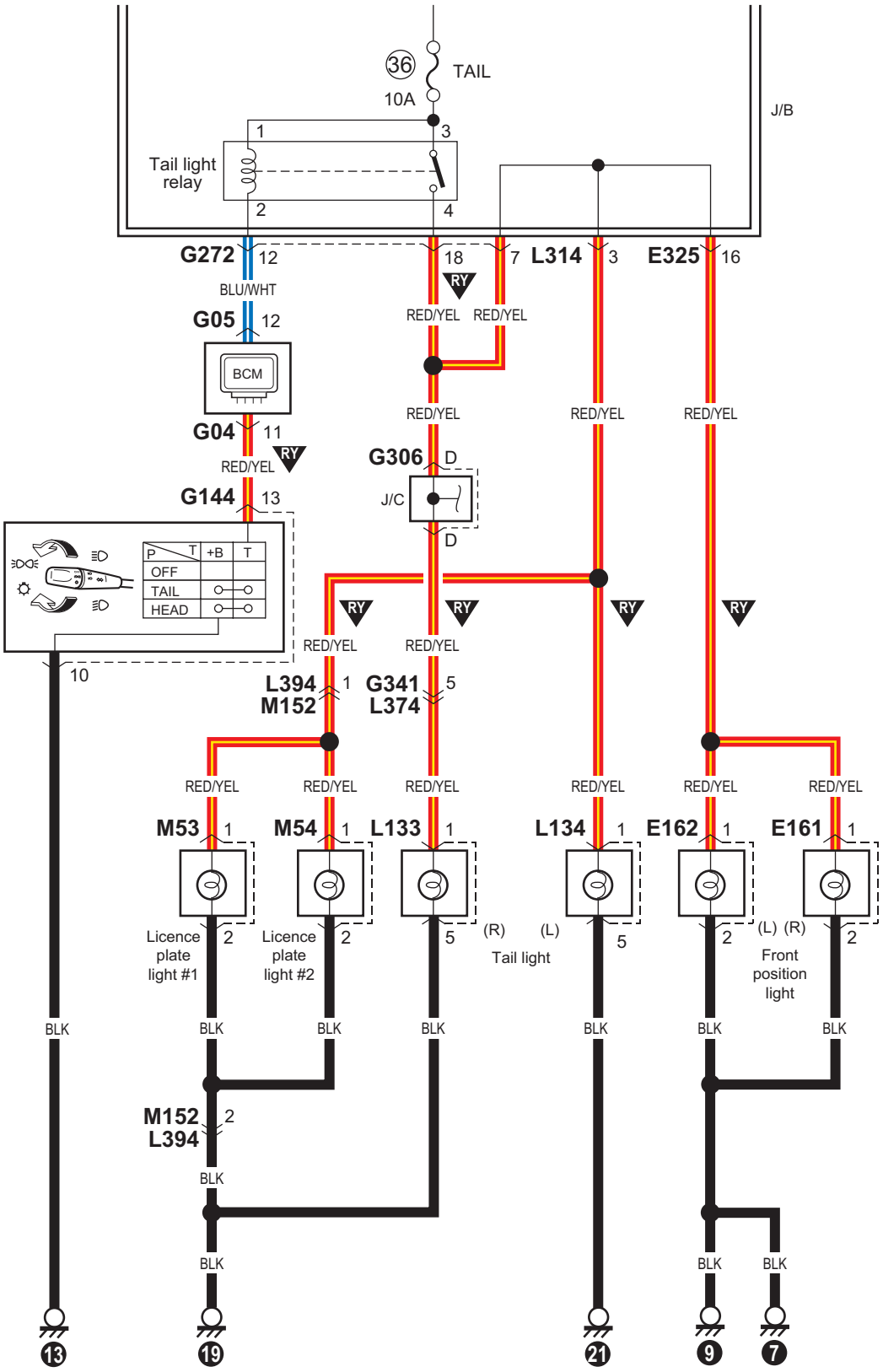

I7RW0A910941-02

D-3 Front Fog Light System Circuit Diagram (Except Taiwan)

S7RW0A910E036

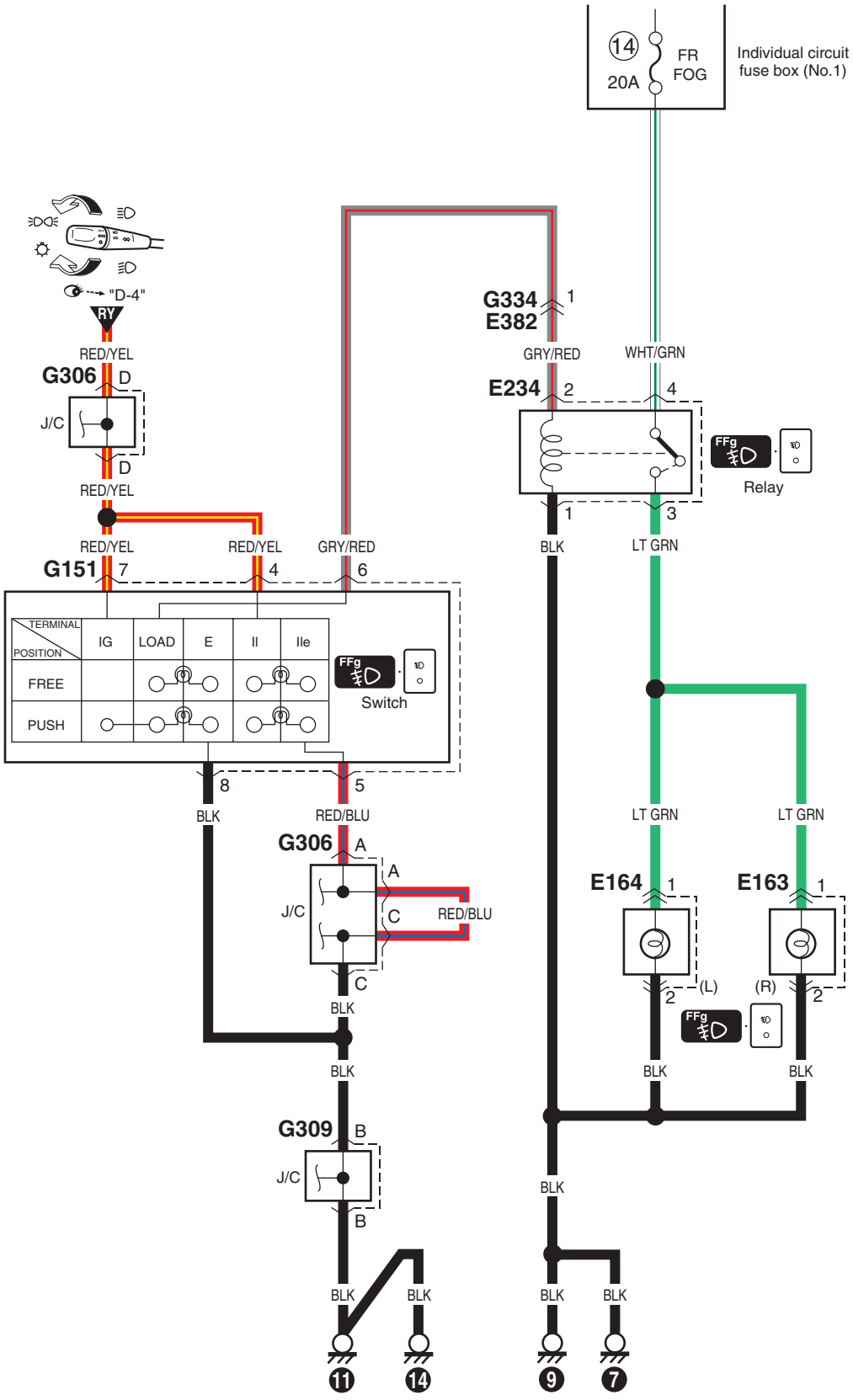

I6RW0C910983-01

D-3 Front Fog Light System Circuit Diagram (Taiwan)

S7RW0A910E037

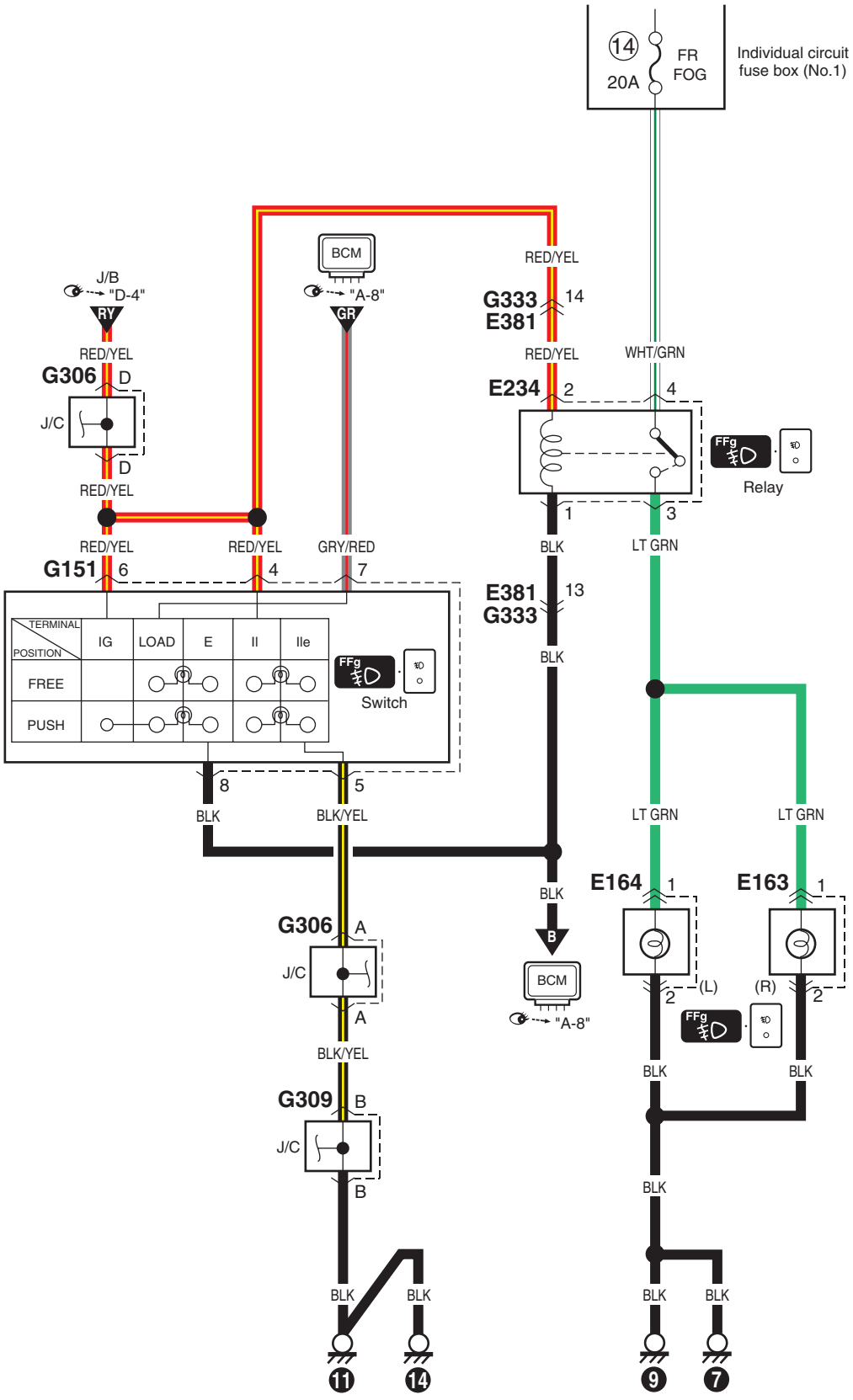

I6RW0C910982-01

D-4 Illumination Light System Circuit Diagram (Except Taiwan)

S7RW0A910E038

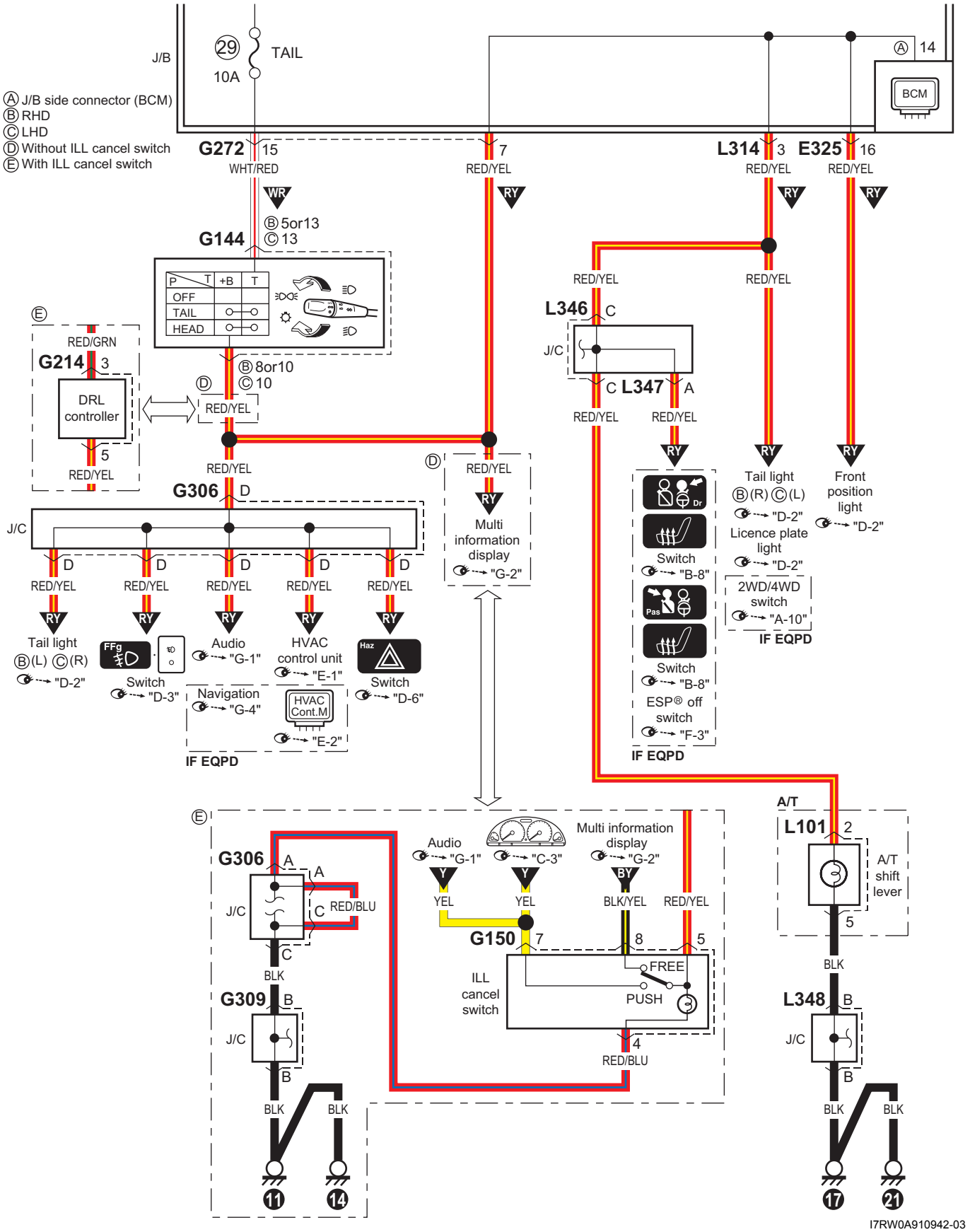

I7RW0A910942-03

D-4 Illumination Light System Circuit Diagram (Taiwan)

S7RW0A910E039

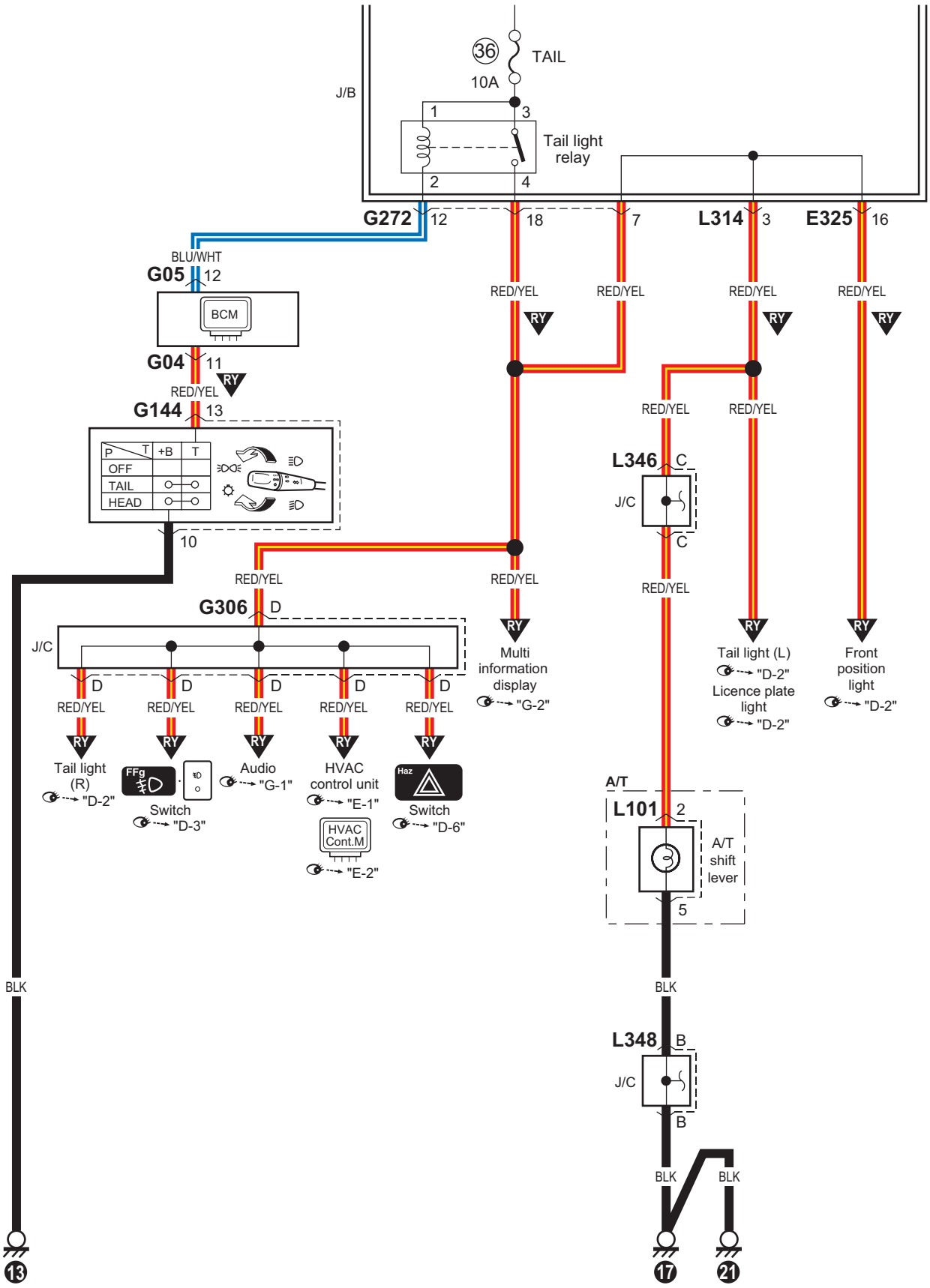

I7RW0A910984-02

D-5 Interior Light System Circuit Diagram (Hatchback (Except Taiwan))

S7RW0A910E040

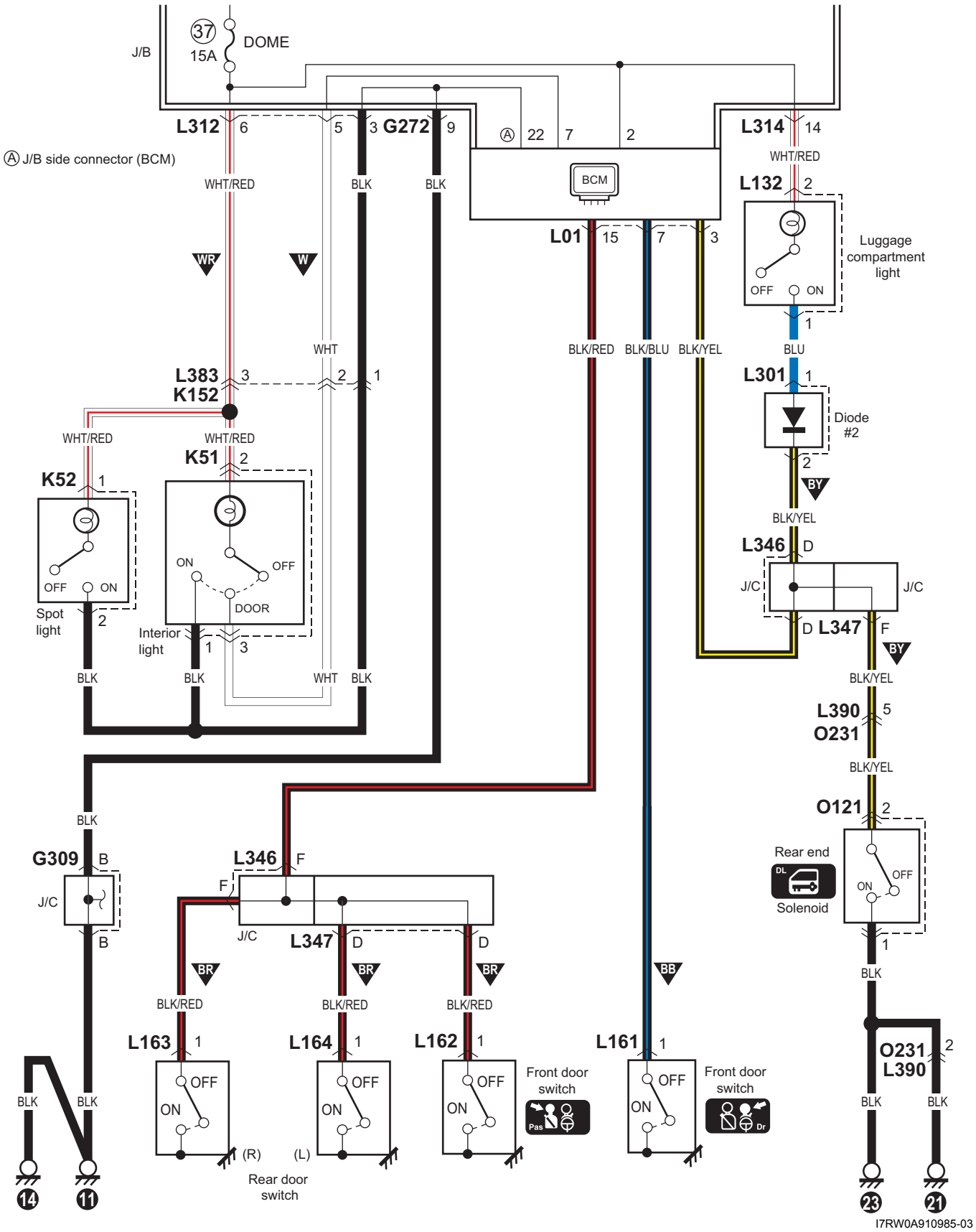

D-5 Interior Light System Circuit Diagram (Hatchback (Taiwan))

S7RW0A910E041

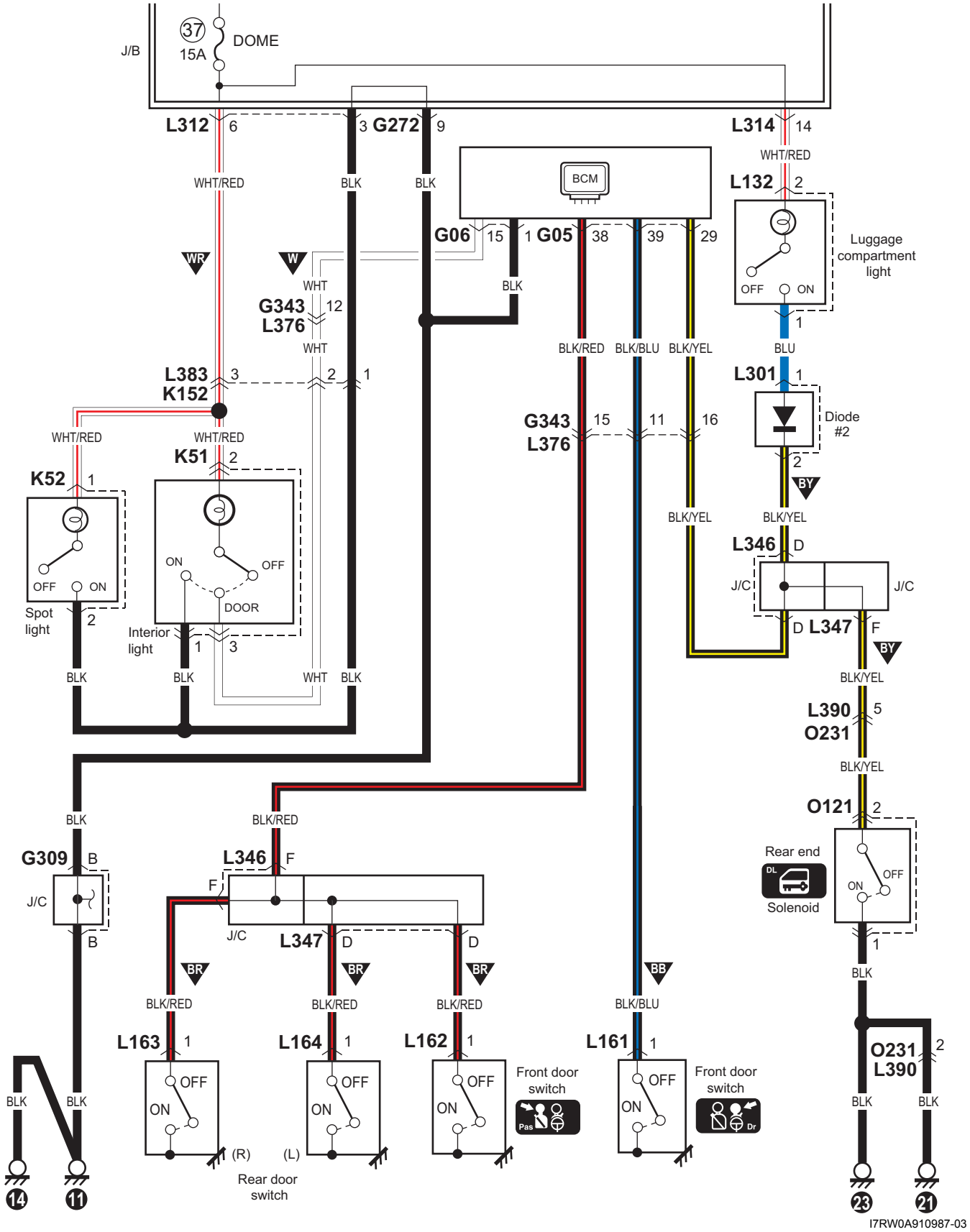

D-5 Interior Light System Circuit Diagram (Sedan (Except Taiwan))

S7RW0A910E065

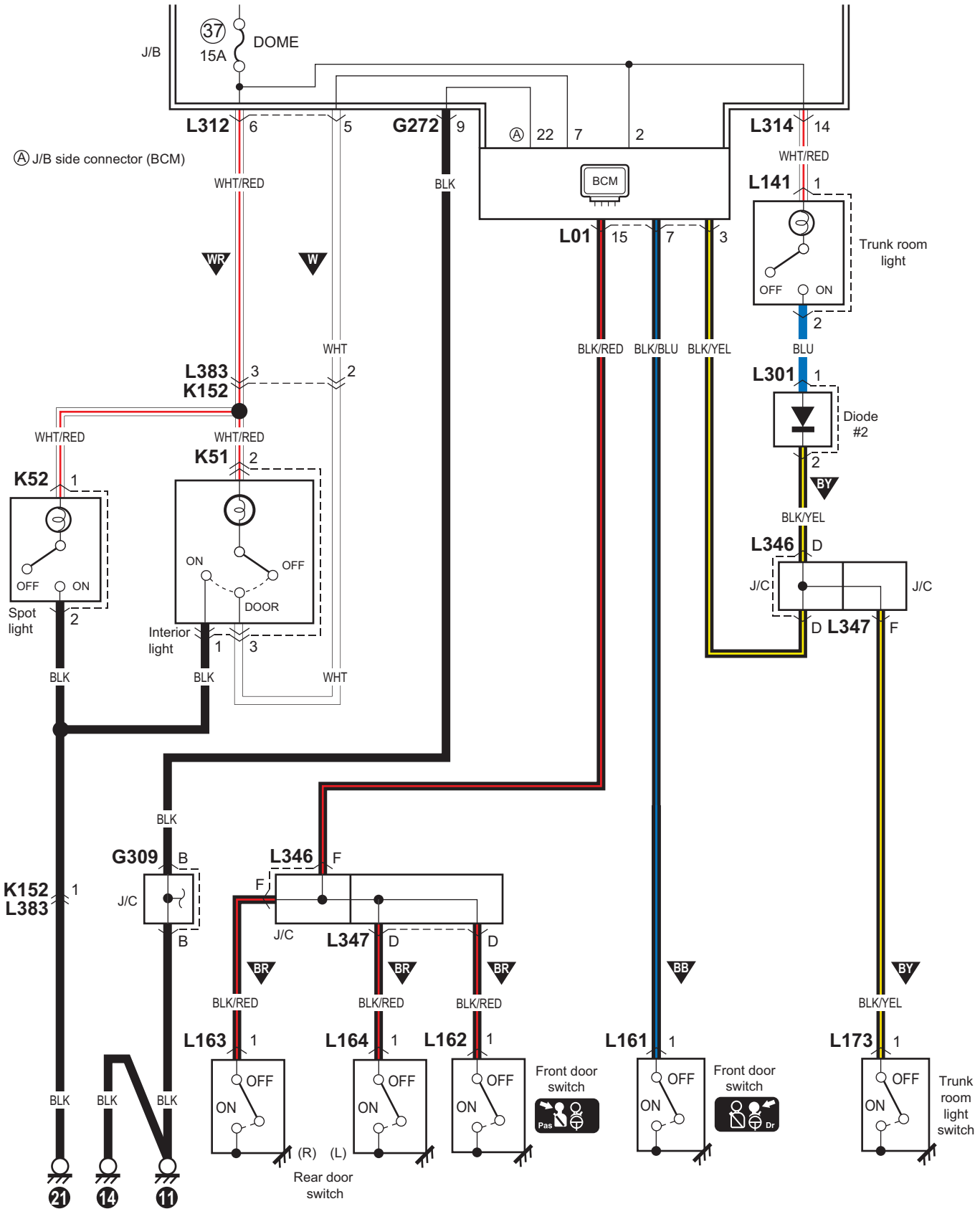

I7RW0A910986-04

D-5 Interior Light System Circuit Diagram (Sedan (Taiwan))

S7RW0A910E059

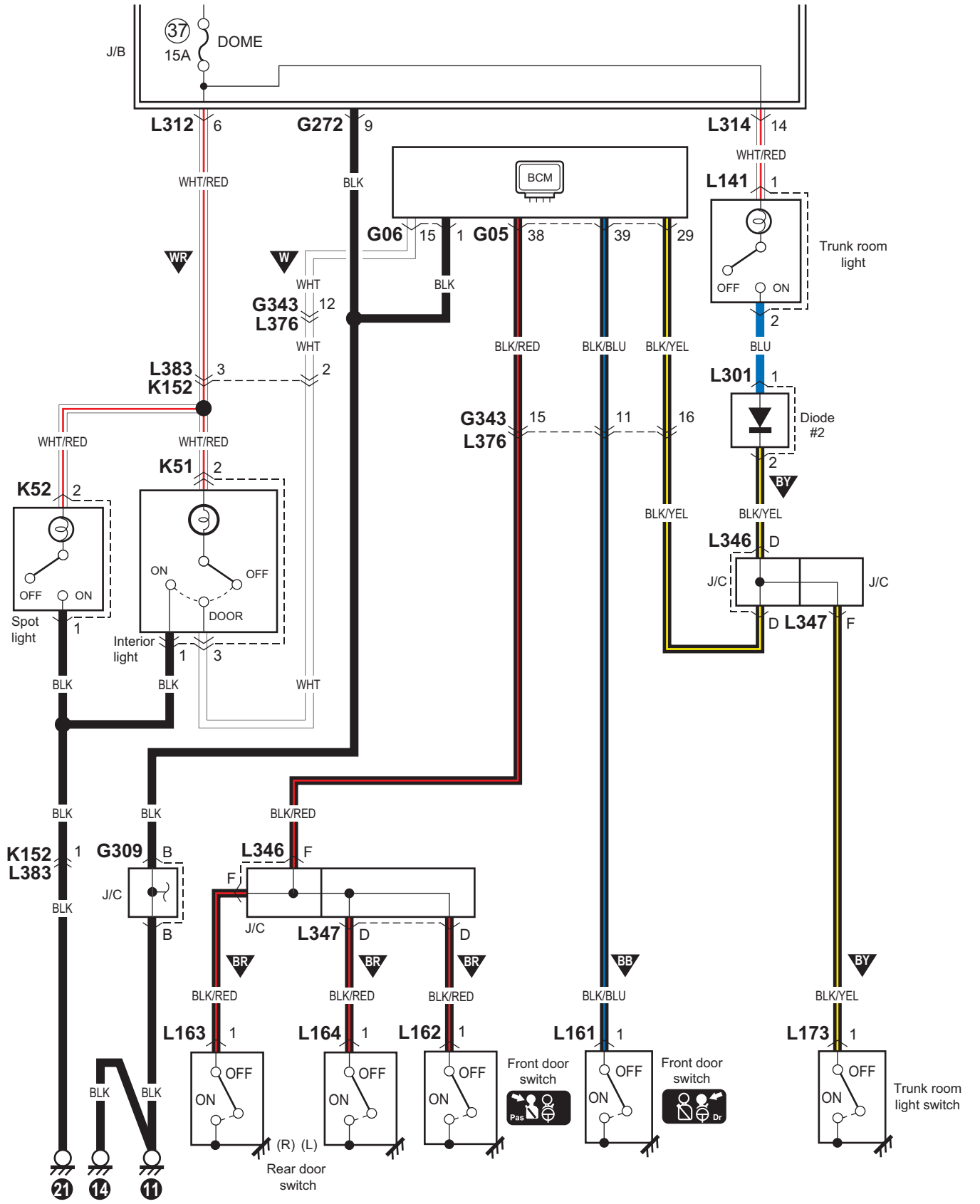

I7RW0A910943-04

D-6 Turn Signal and Hazard Warning Light System Circuit Diagram (Hatchback (Except Taiwan))

S7RW0A910E042

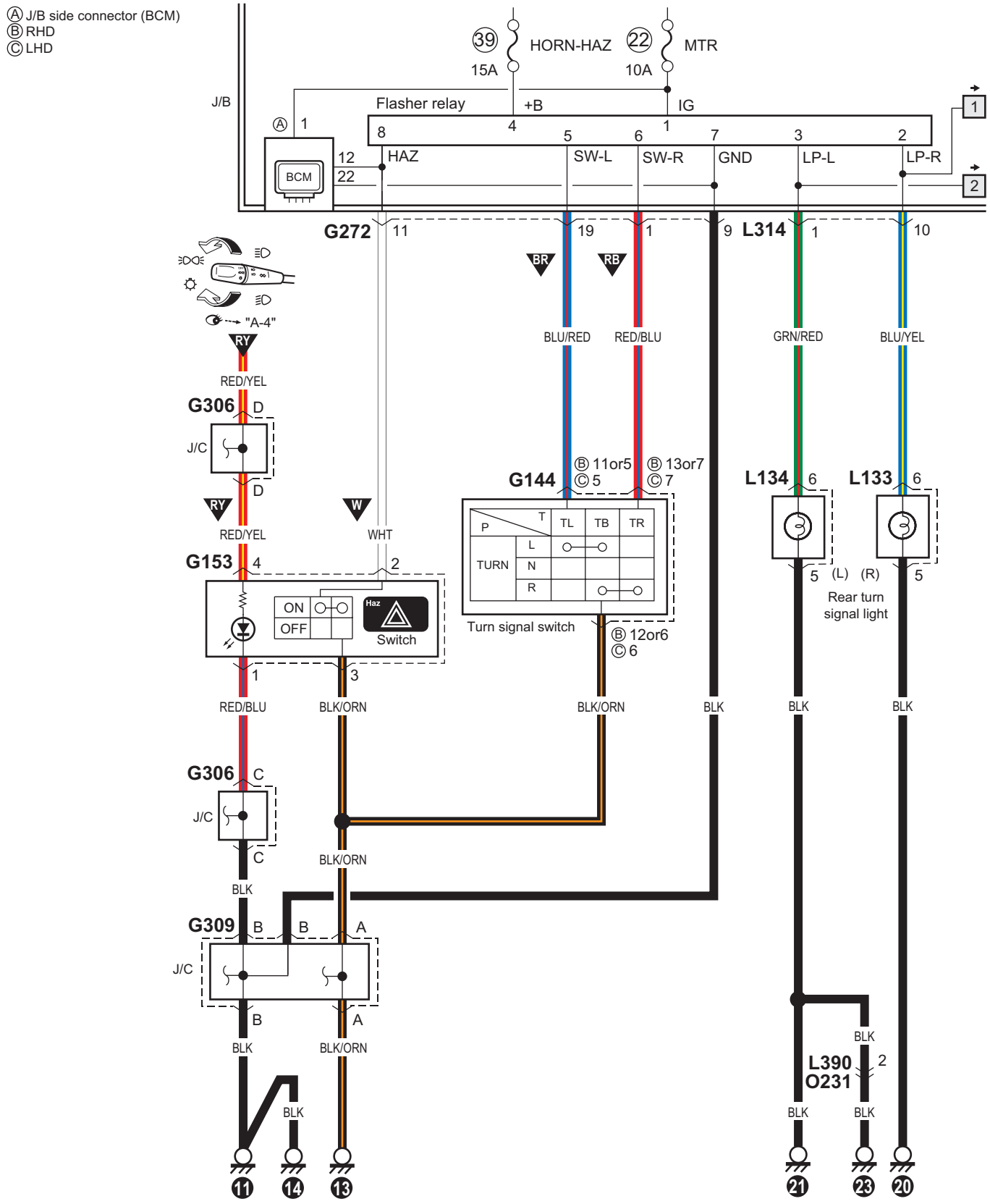

I7RW0A910988-02

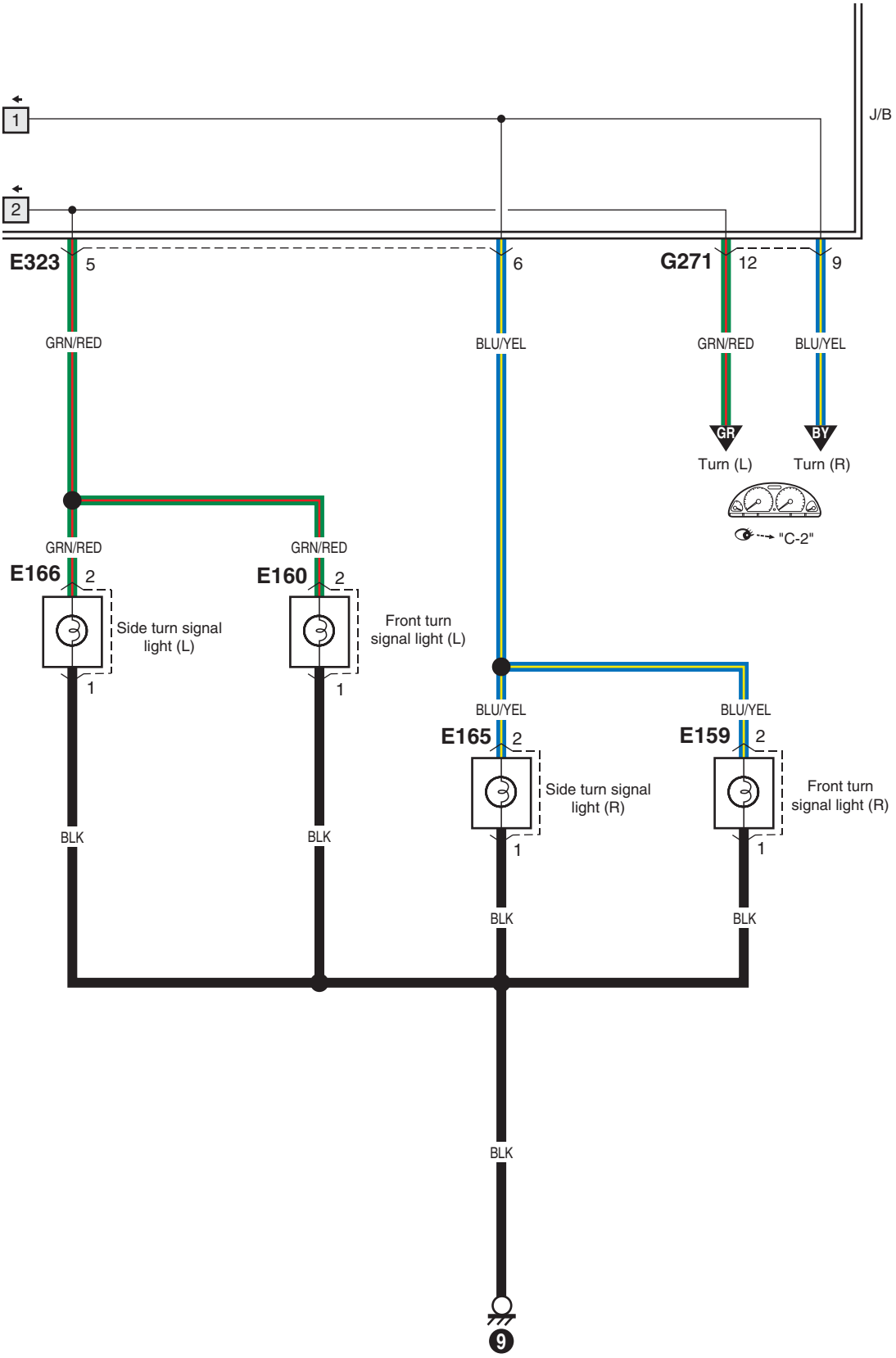

I6RW0C910989-01

D-6 Turn Signal and Hazard Warning Light System Circuit Diagram (Sedan (Except Taiwan))

S7RW0A910E066

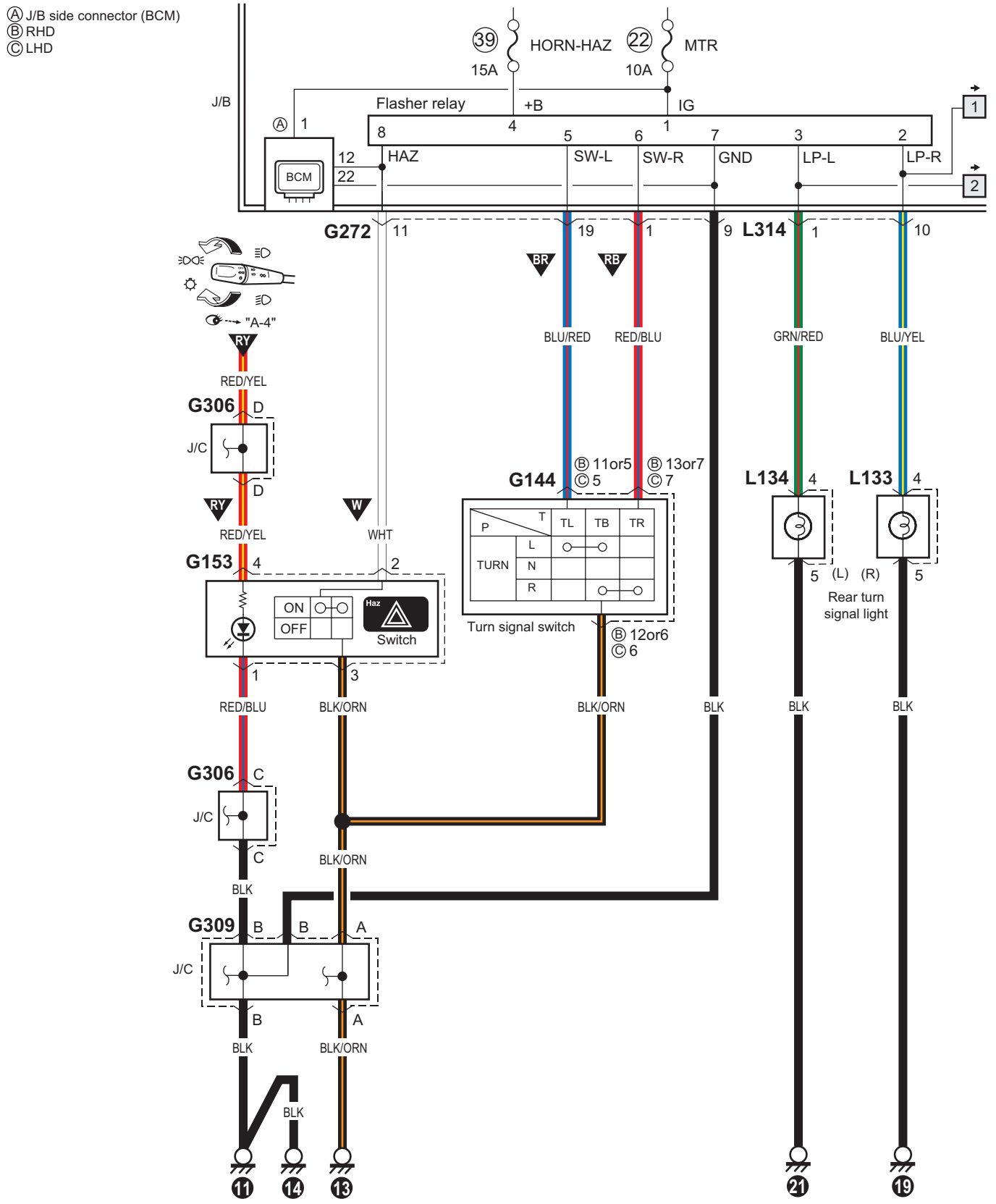

I7RW0A910989-02

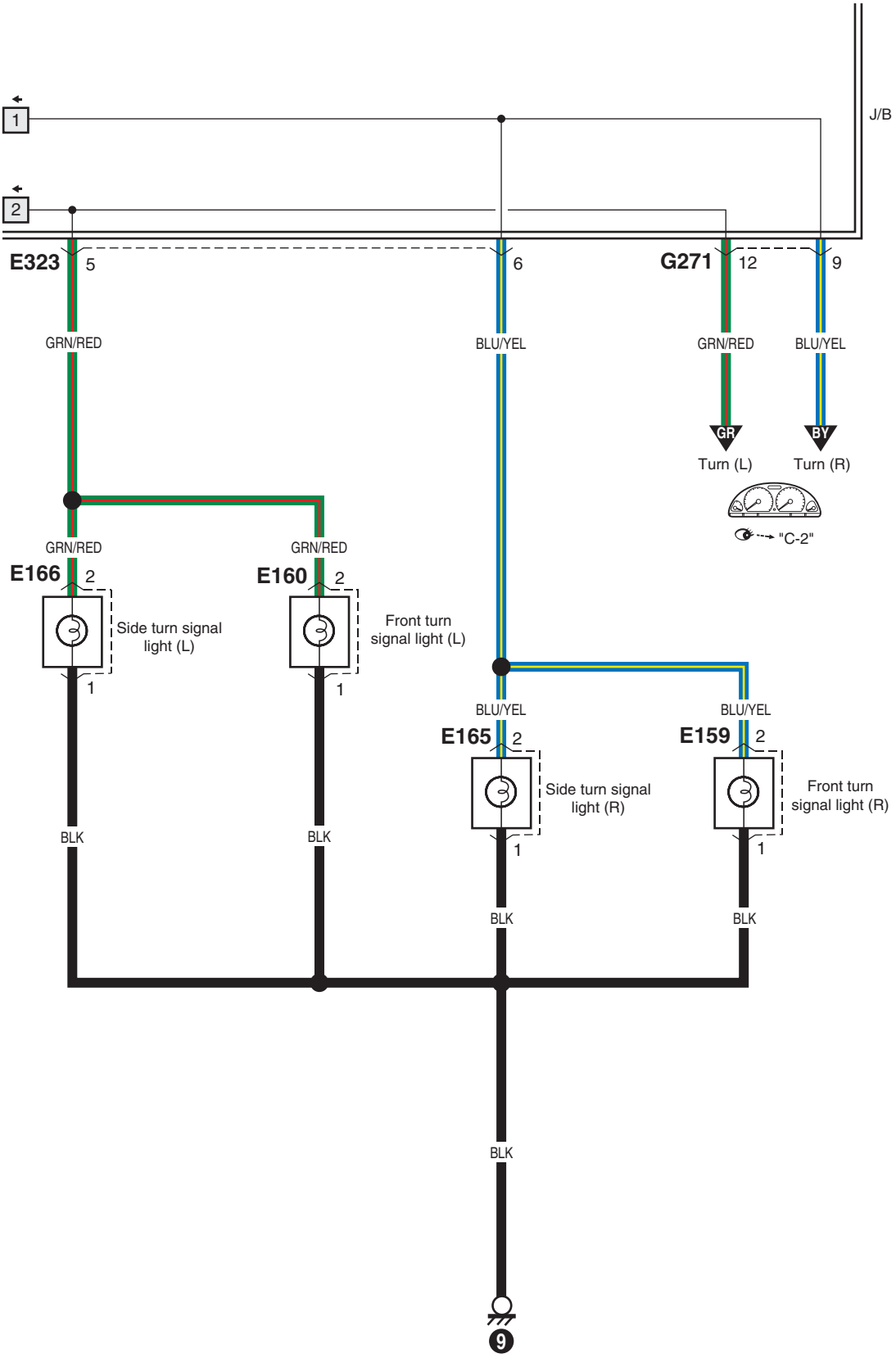

I6RW0C910989-01

D-6 Turn Signal and Hazard Warning Light System Circuit Diagram (Hatchback (Taiwan))

S7RW0A910E043

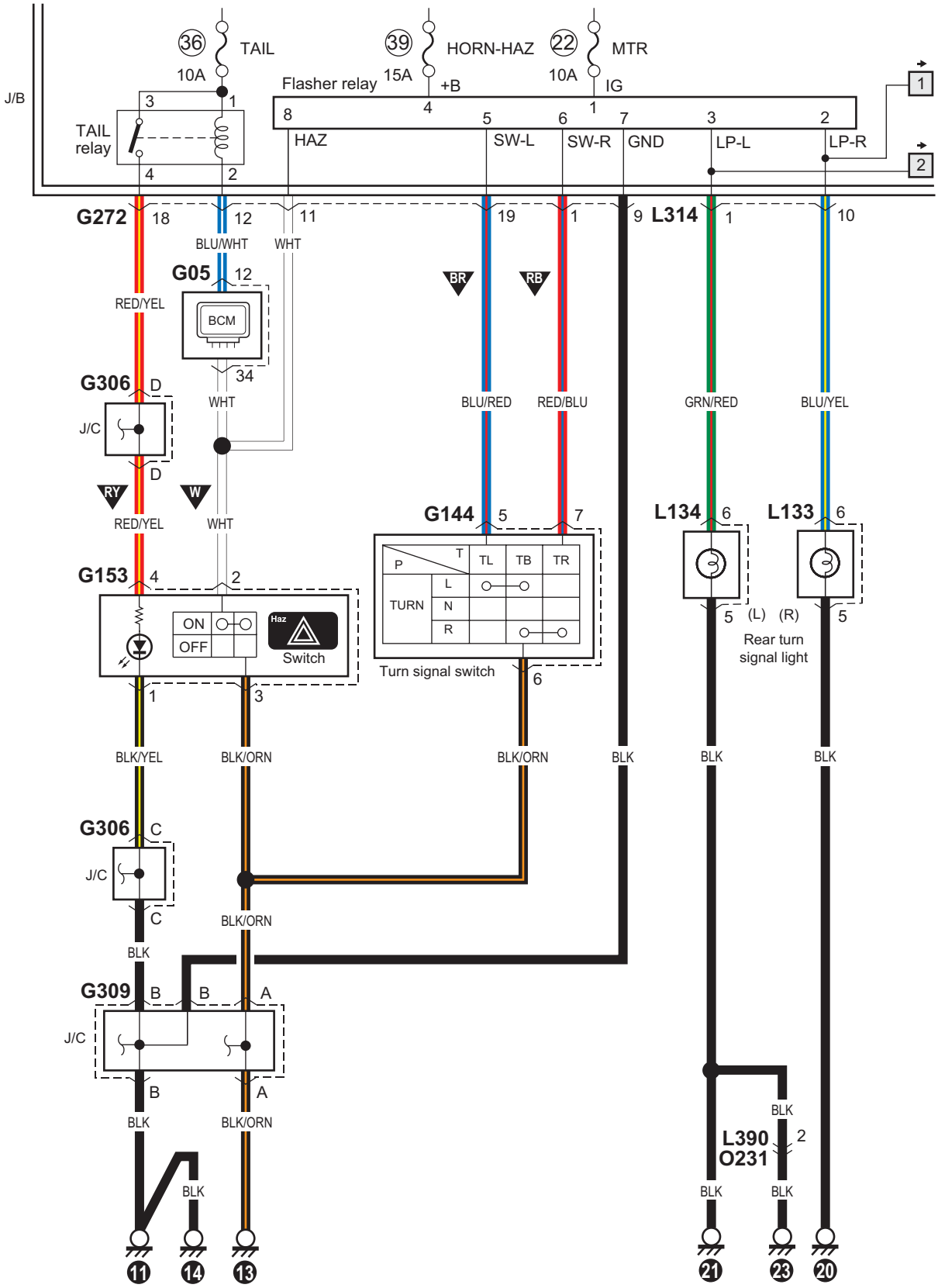

I7RW0A910990-02

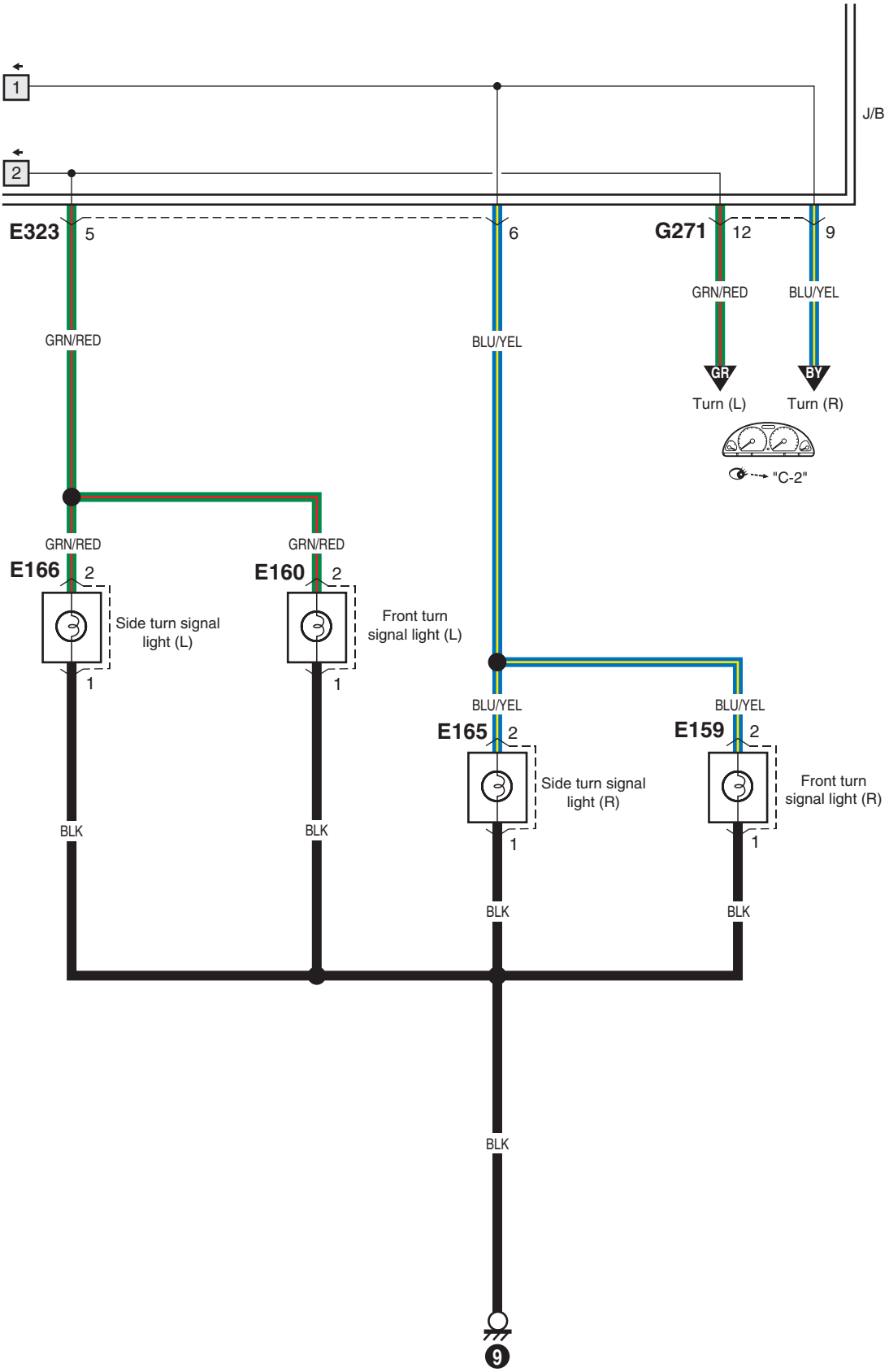

I6RW0C910991-01

D-6 Turn Signal and Hazard Warning Light System Circuit Diagram (Sedan (Taiwan))

S7RW0A910E060

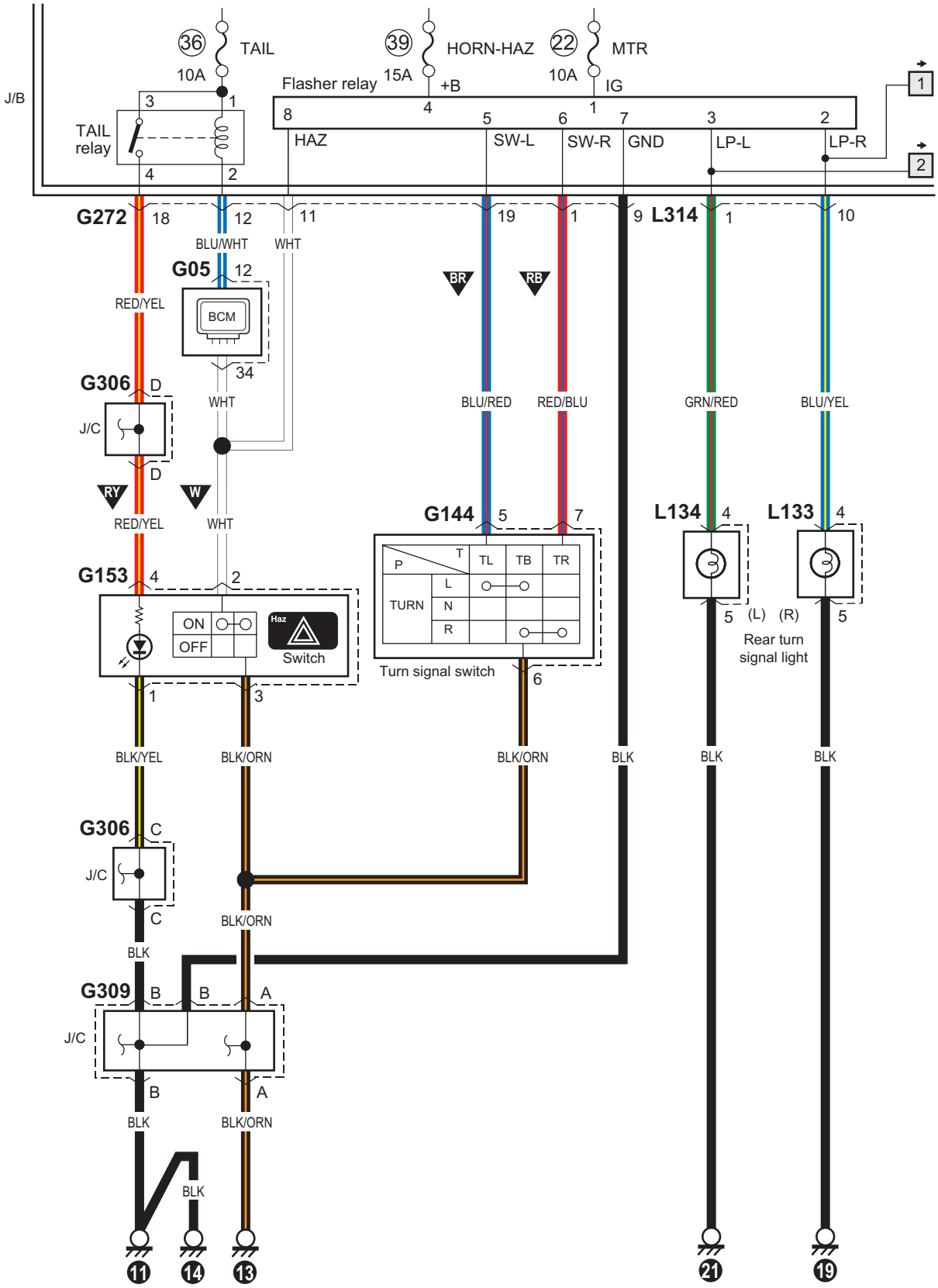

I7RW0A910944-03

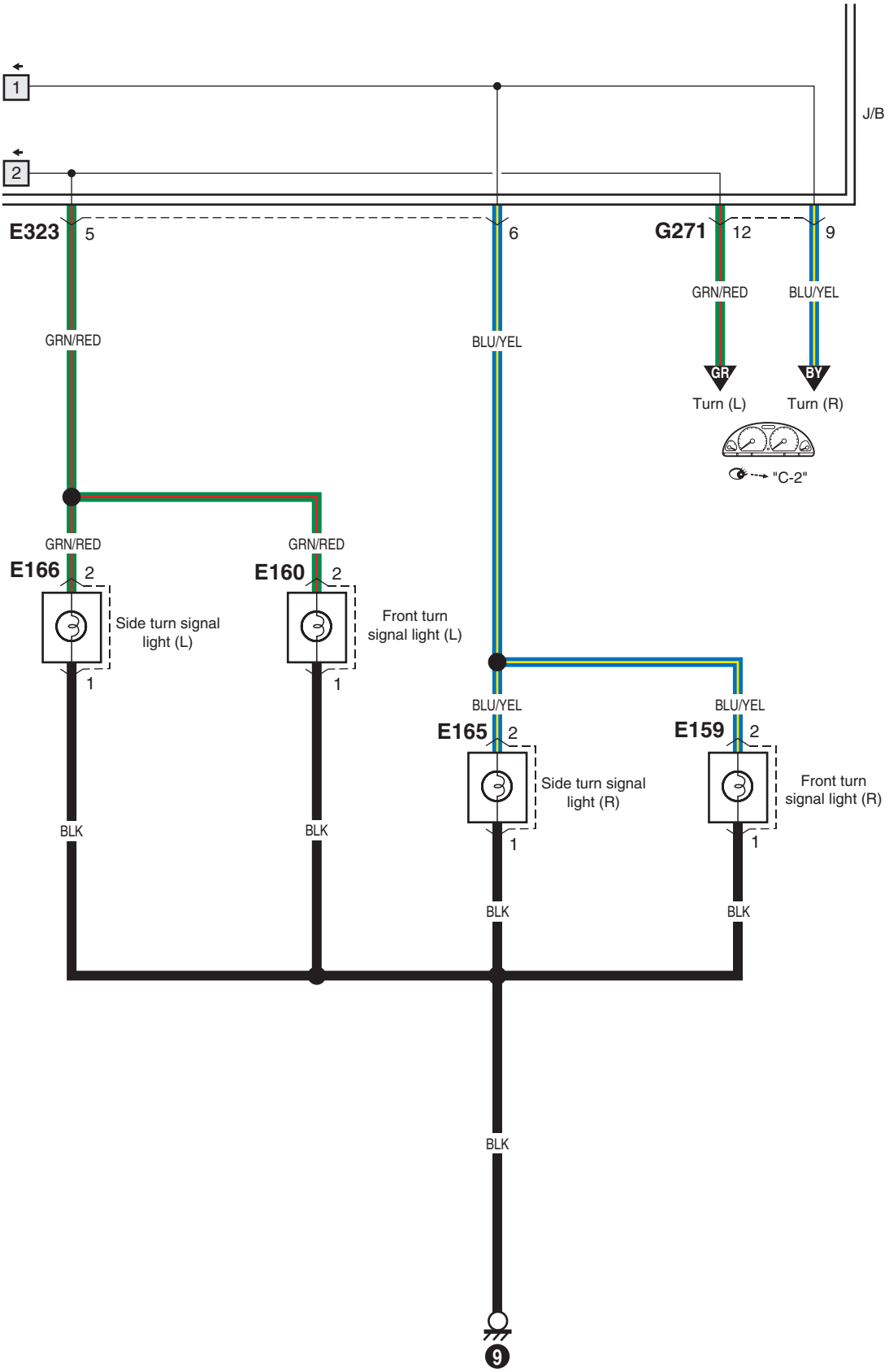

I6RW0C910991-01

D-7 Brake Light System Circuit Diagram (Hatchback)

S7RW0A910E044

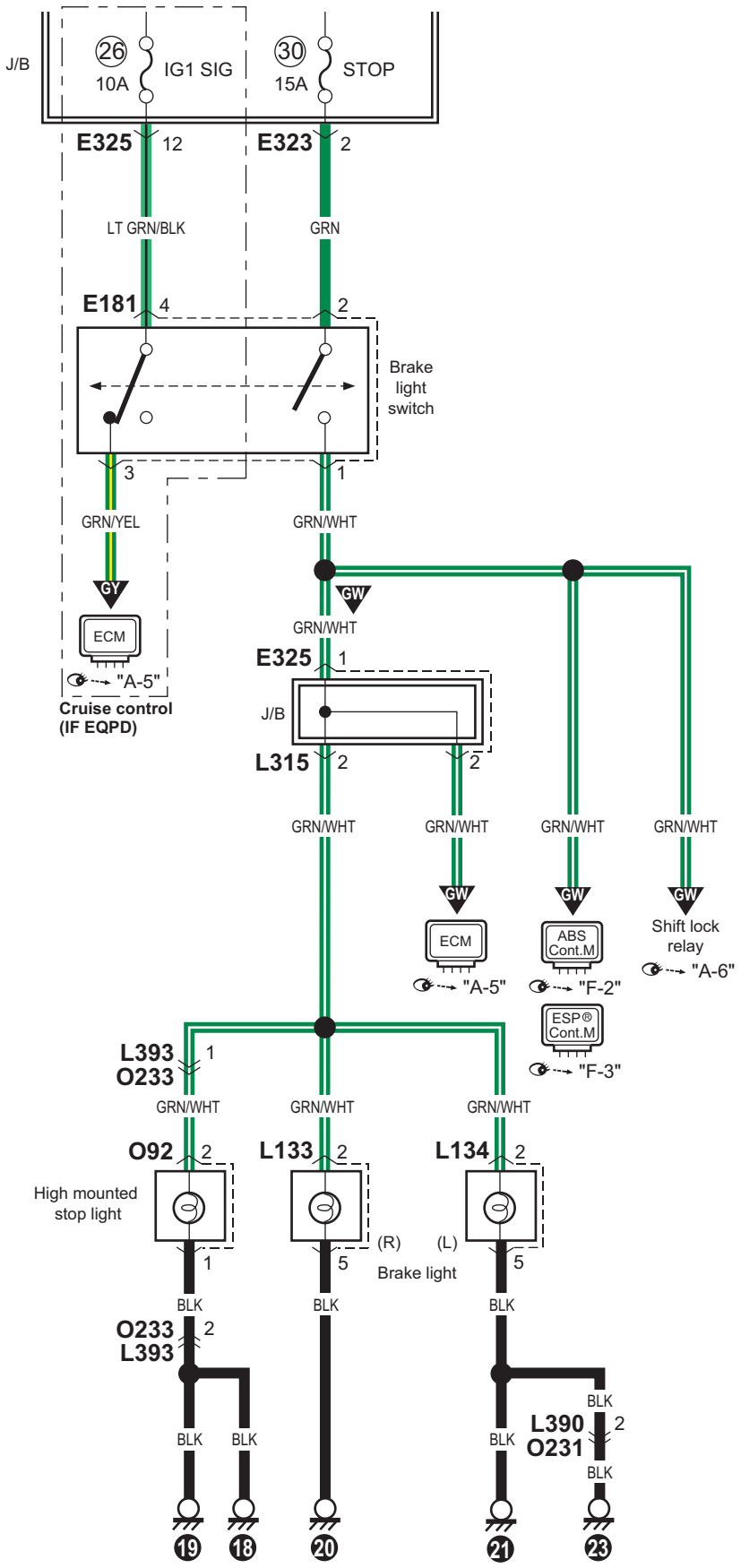

I7RW0A910945-01

D-7 Brake Light System Circuit Diagram (Sedan)

S7RW0A910E061

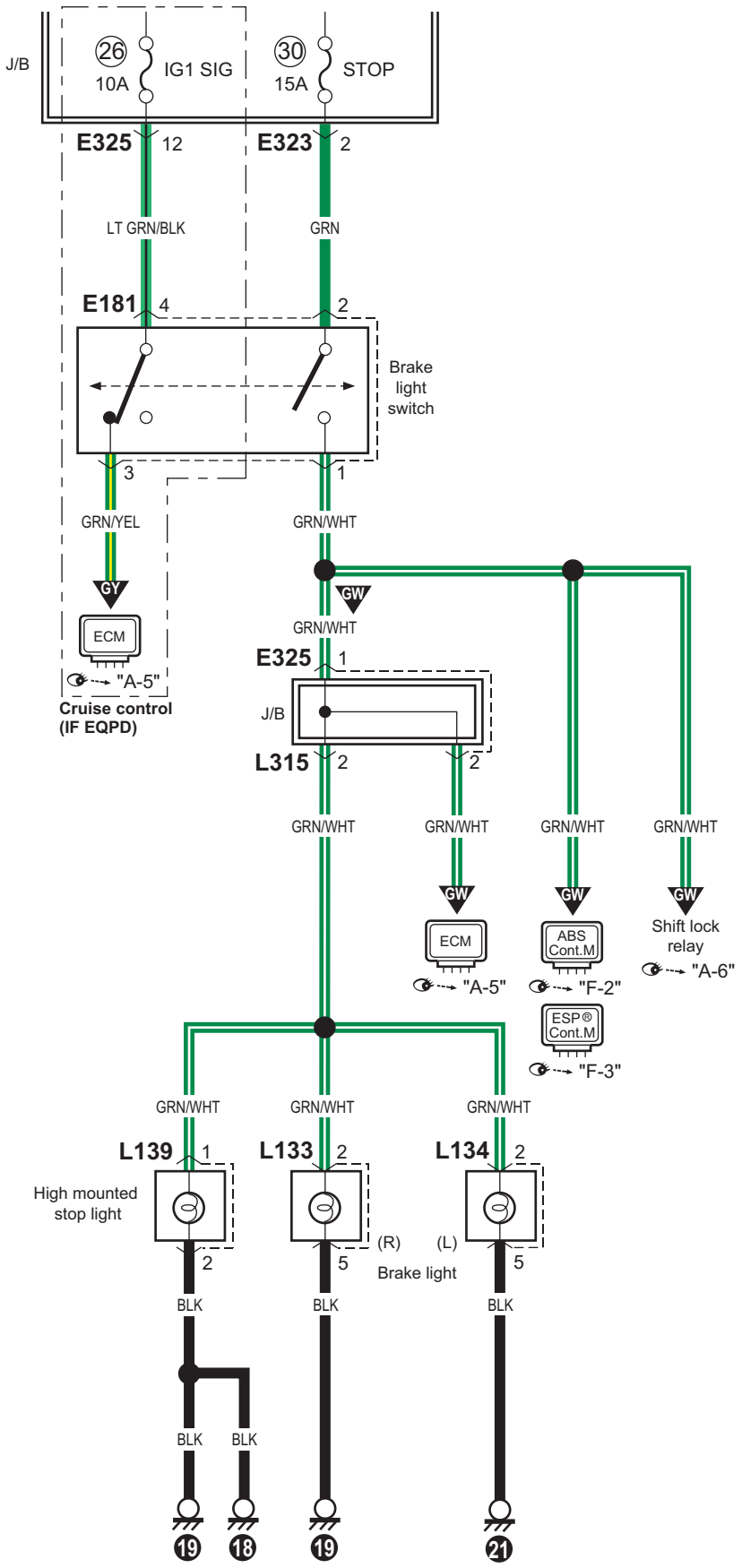

I7RW0A910946-01

D-8 Back-Up Light System Circuit Diagram (Hatchback)

S7RW0A910E045

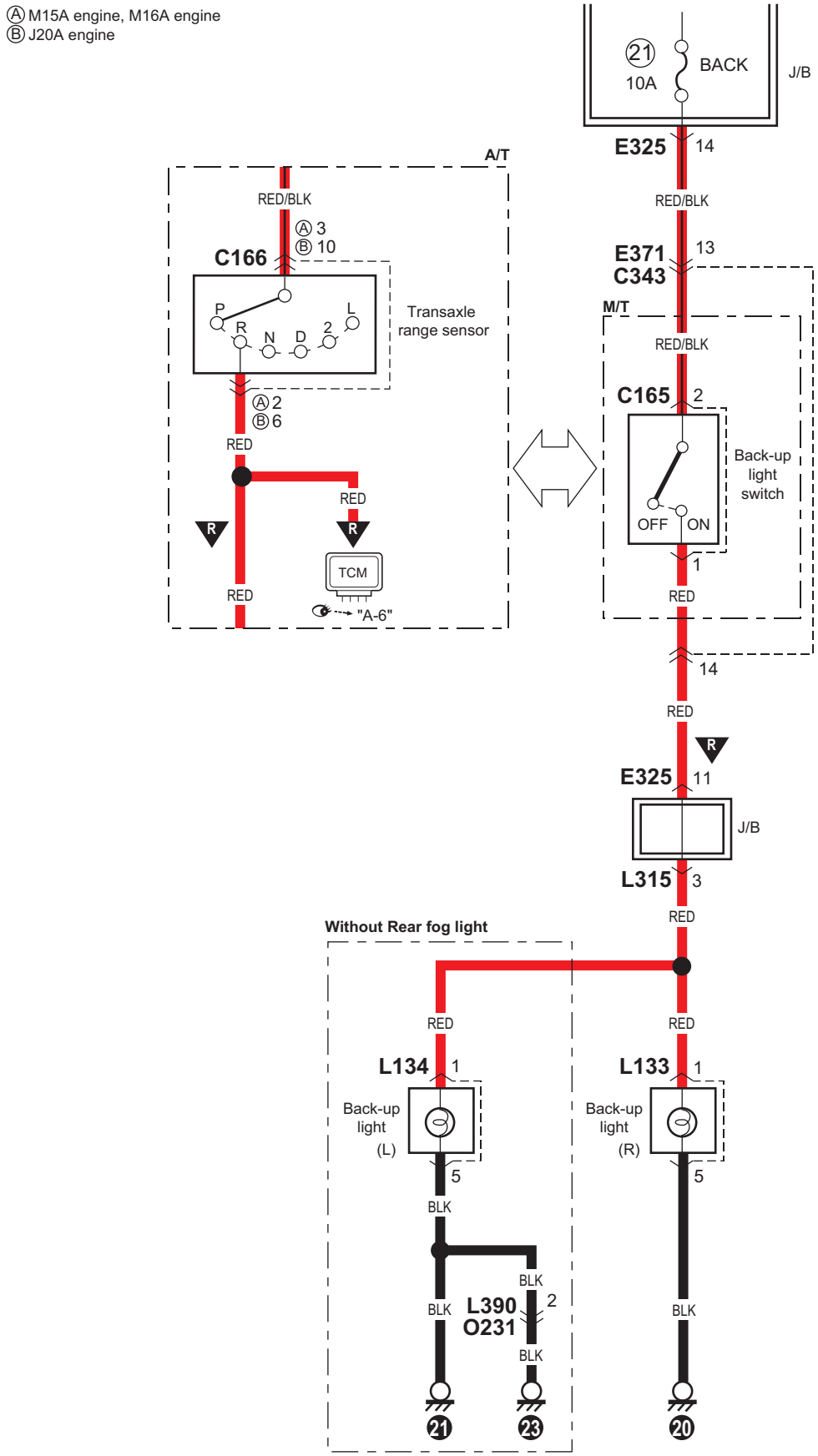

I7RW0A910A05-02

D-8 Back-Up Light System Circuit Diagram (Sedan)

S7RW0A910E062

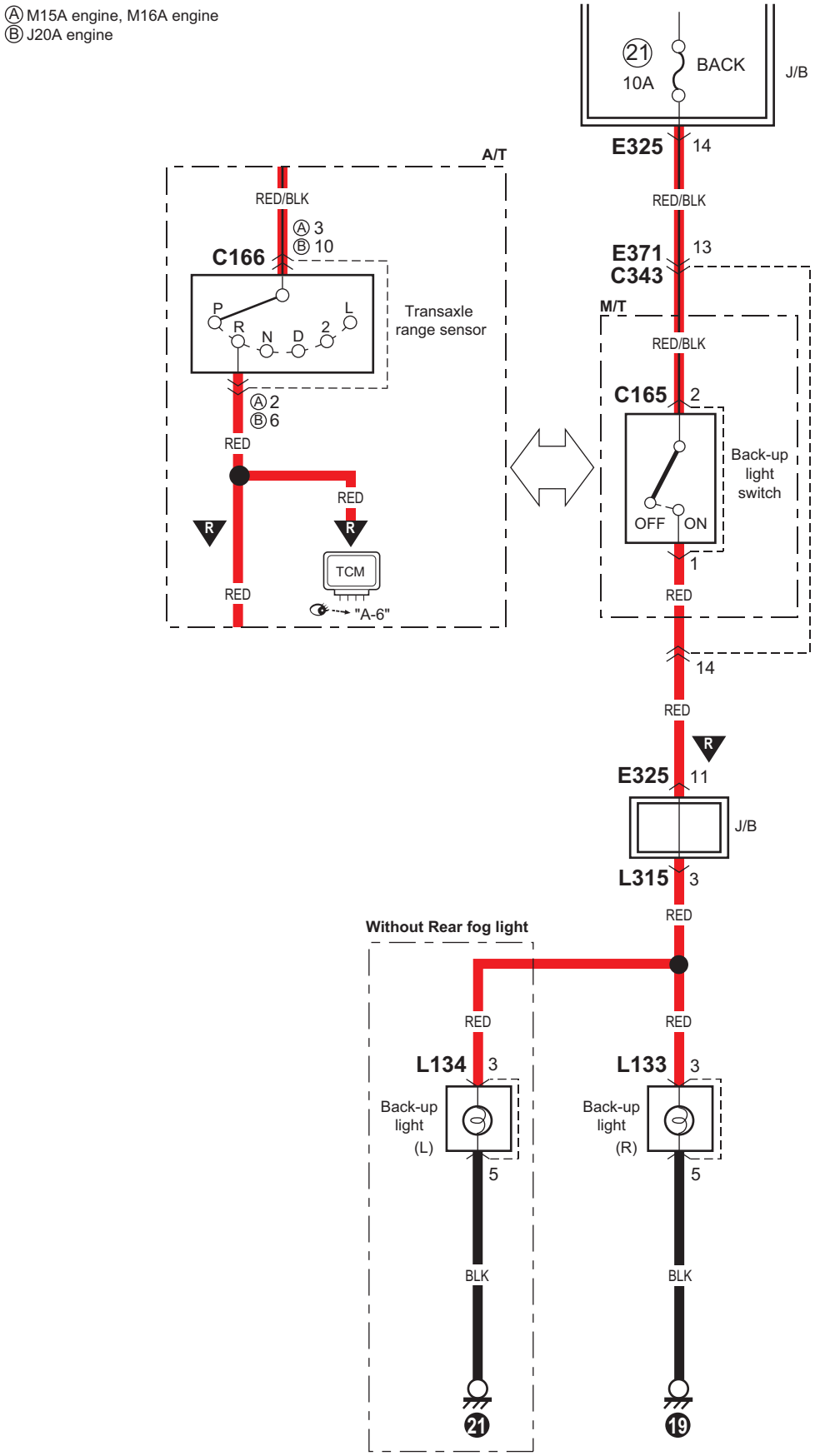

I7RW0A910947-04

D-9 Headlight Beam Leveling System Circuit Diagram (Manual Leveling)

S7RW0A910E046

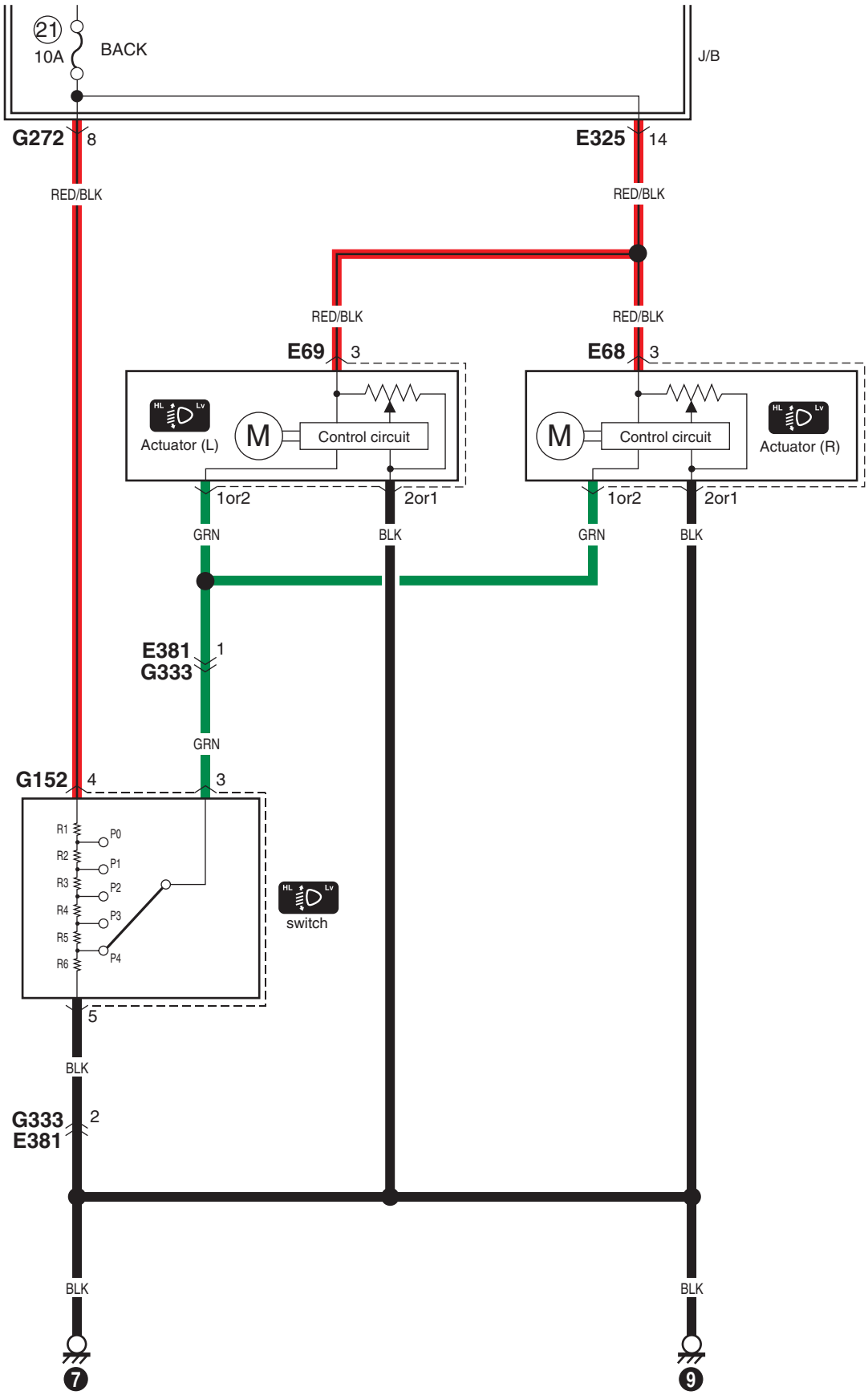

I6RW0D910921-01

D-10 Rear Fog Light Circuit Diagram (Hatchback)

S7RW0A910E047

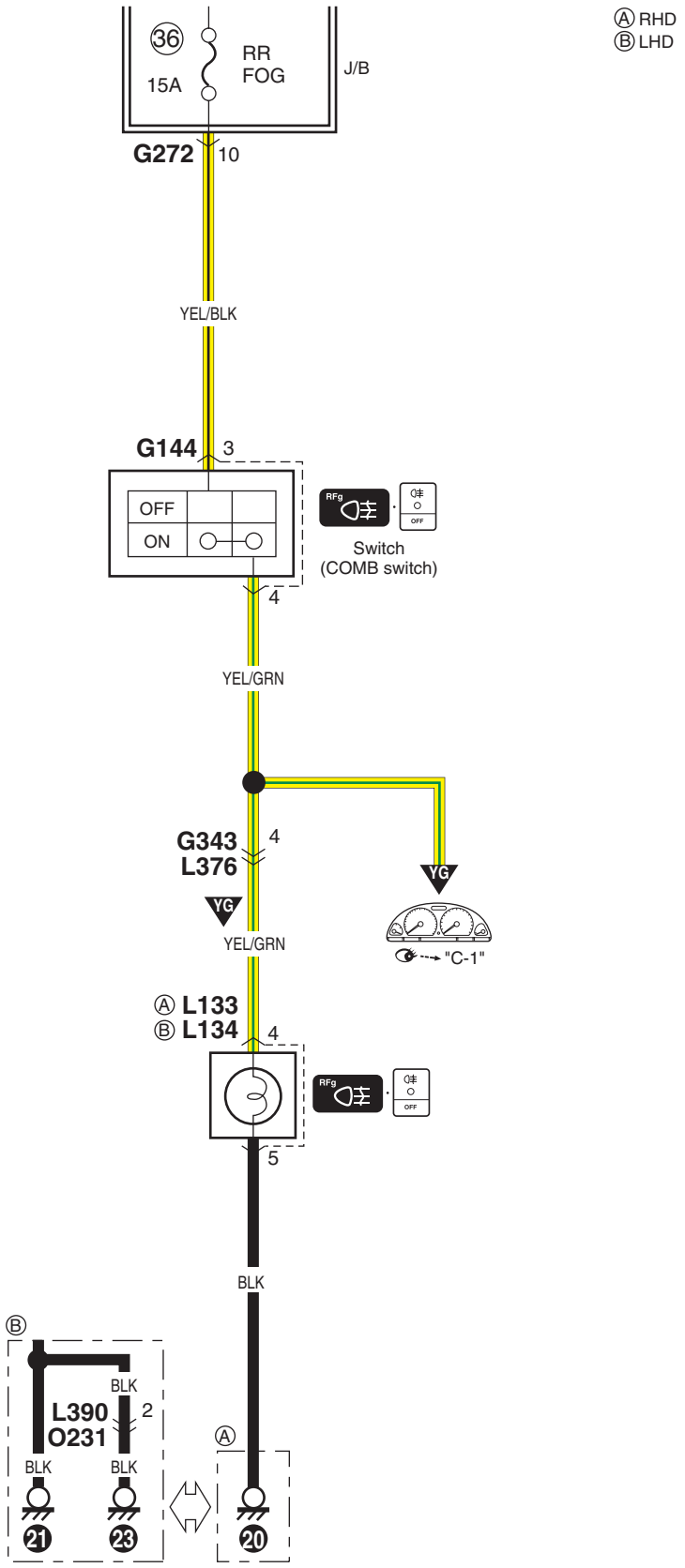

I6RW0D910922-03

D-10 Rear Fog Light Circuit Diagram (Sedan)

S7RW0A910E067

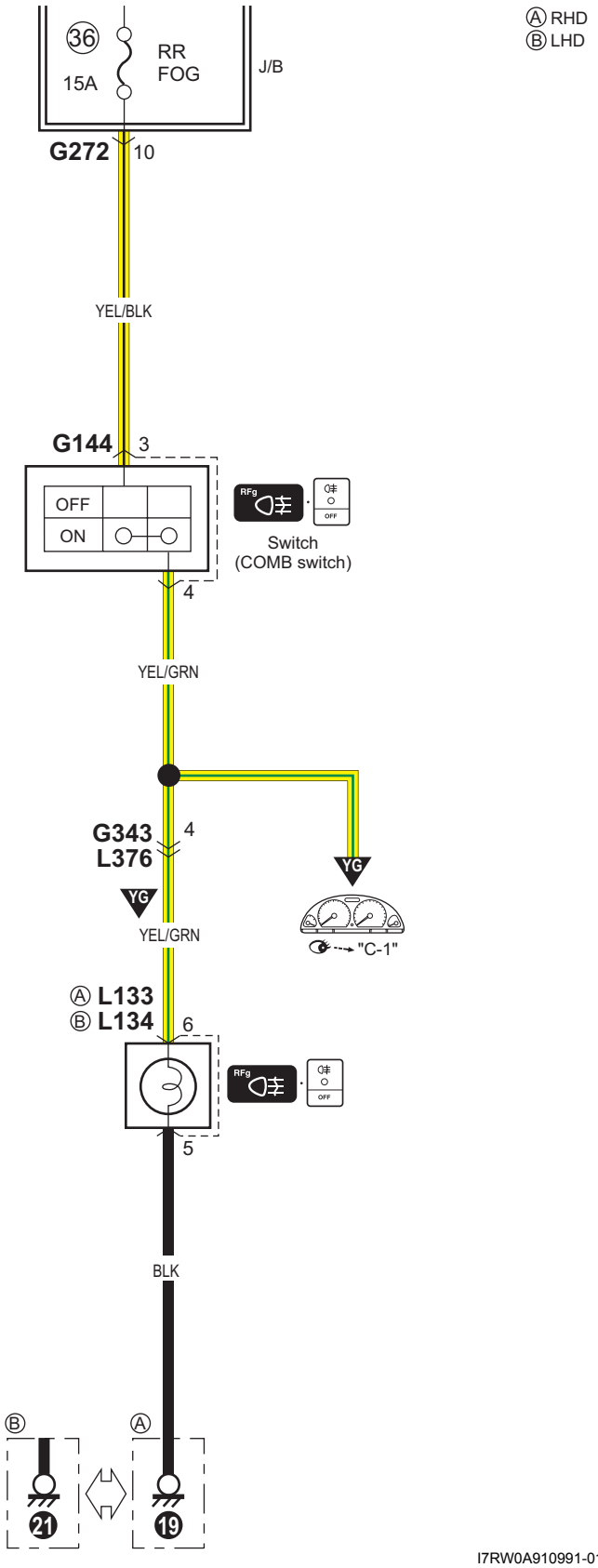

I7RW0A910991-01

E-1 Heater System Circuit Diagram

S7RW0A910E048

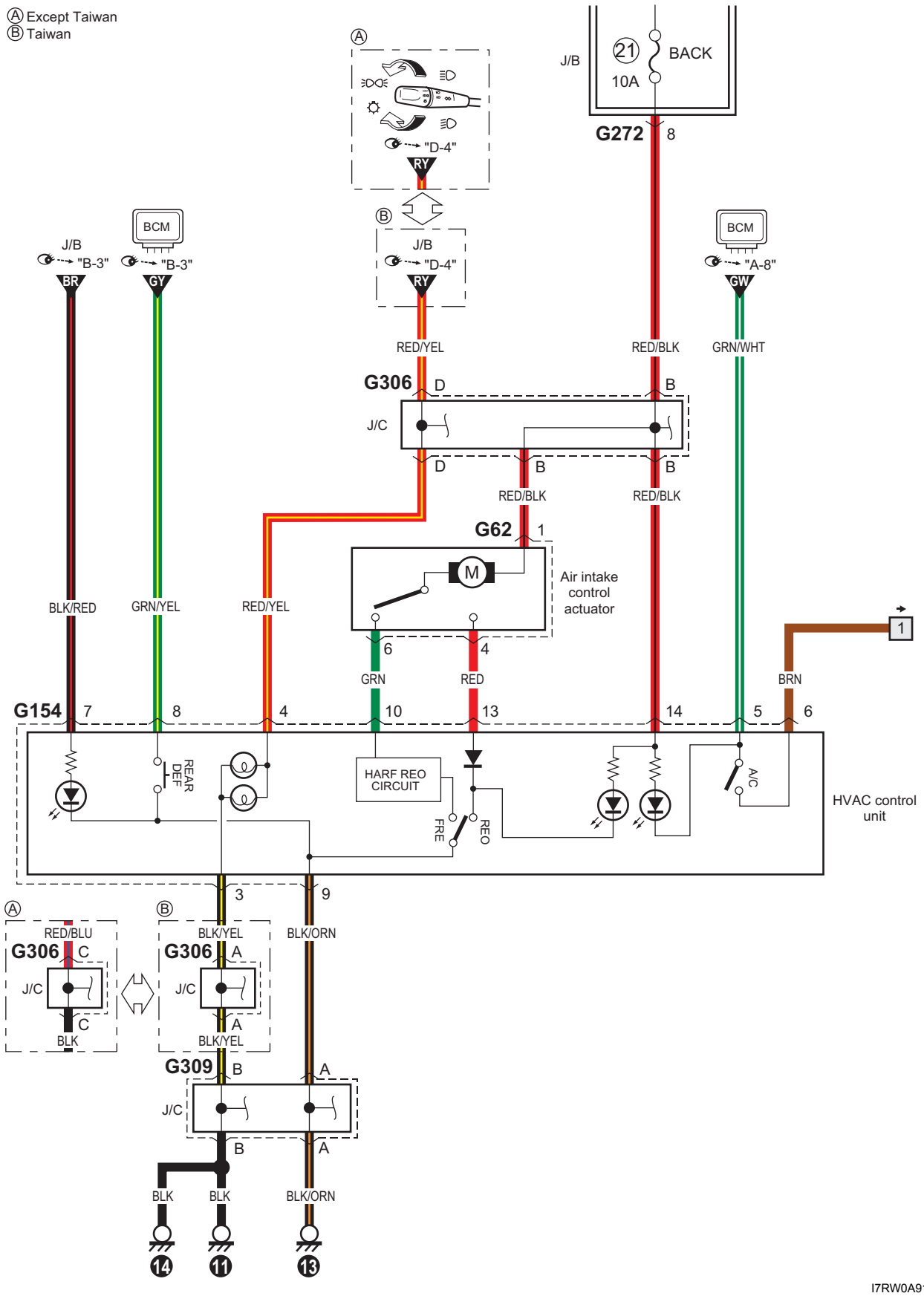

I7RW0A910992-01

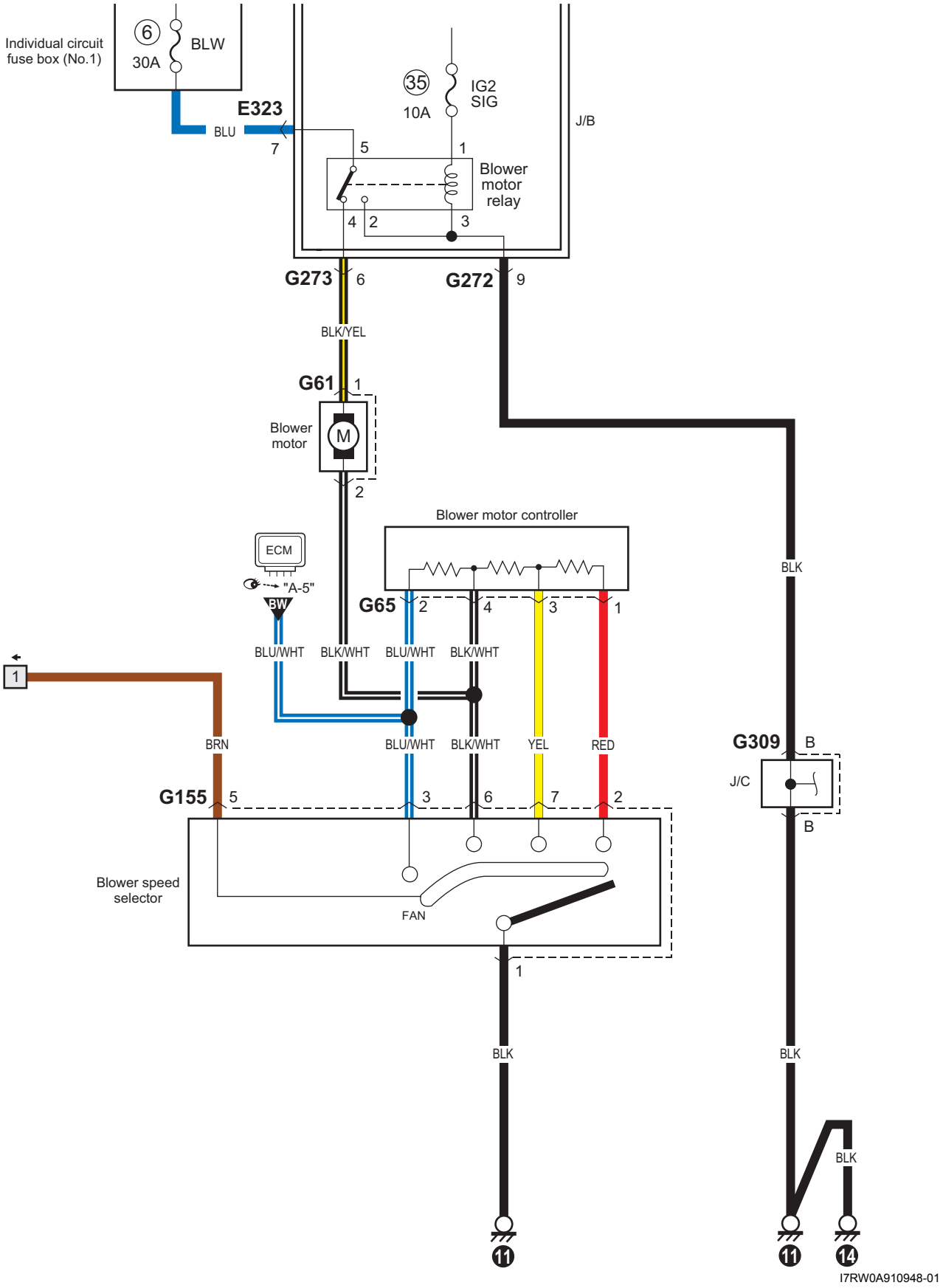
Individual circuit fuse box (No.1)
6
30A
BLW
E323
BLU
7
35
10A
IG2 SIG
J/B
5
1
Blower motor relay
4
2
3
G273
6
G272
9
BLK/YEL
G61
1
Blower motor
M
2
Blower motor controller
ECM
"A-5"
BW
G65
2
4
3
1
BLU/WHT
BLK/WHT
BLU/WHT
BLK/WHT
BLK
1
BRN
BLU/WHT
BLK/WHT
YEL
RED
G309
B
J/C
B
G155
5
3
6
7
2
Blower speed selector
FAN
1
BLK
BLK
BLK
11
11
14
I7RW0A910948-01

E-2 Auto A/C System Circuit Diagram

S7RW0A910E049

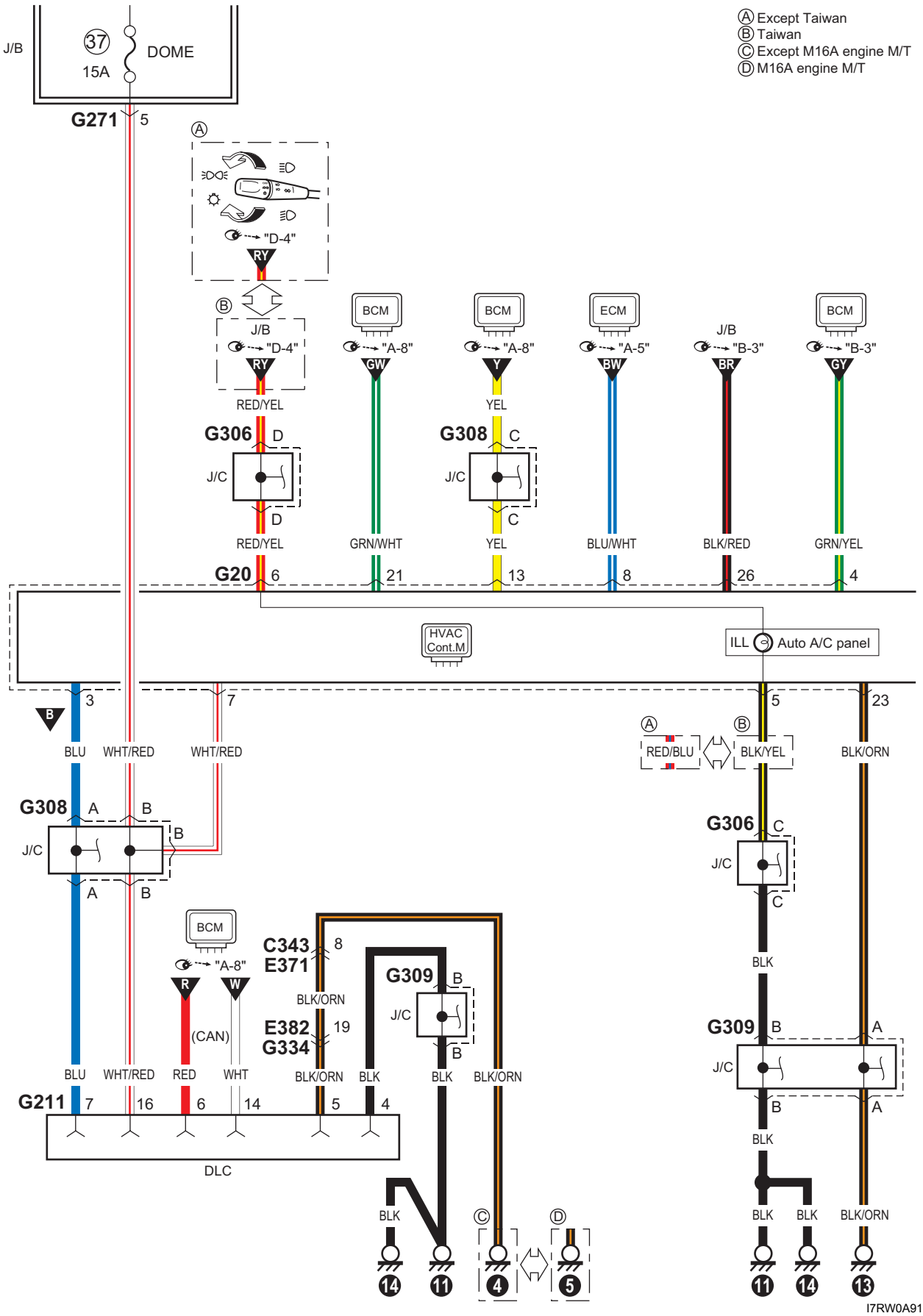

I7RW0A910993-03

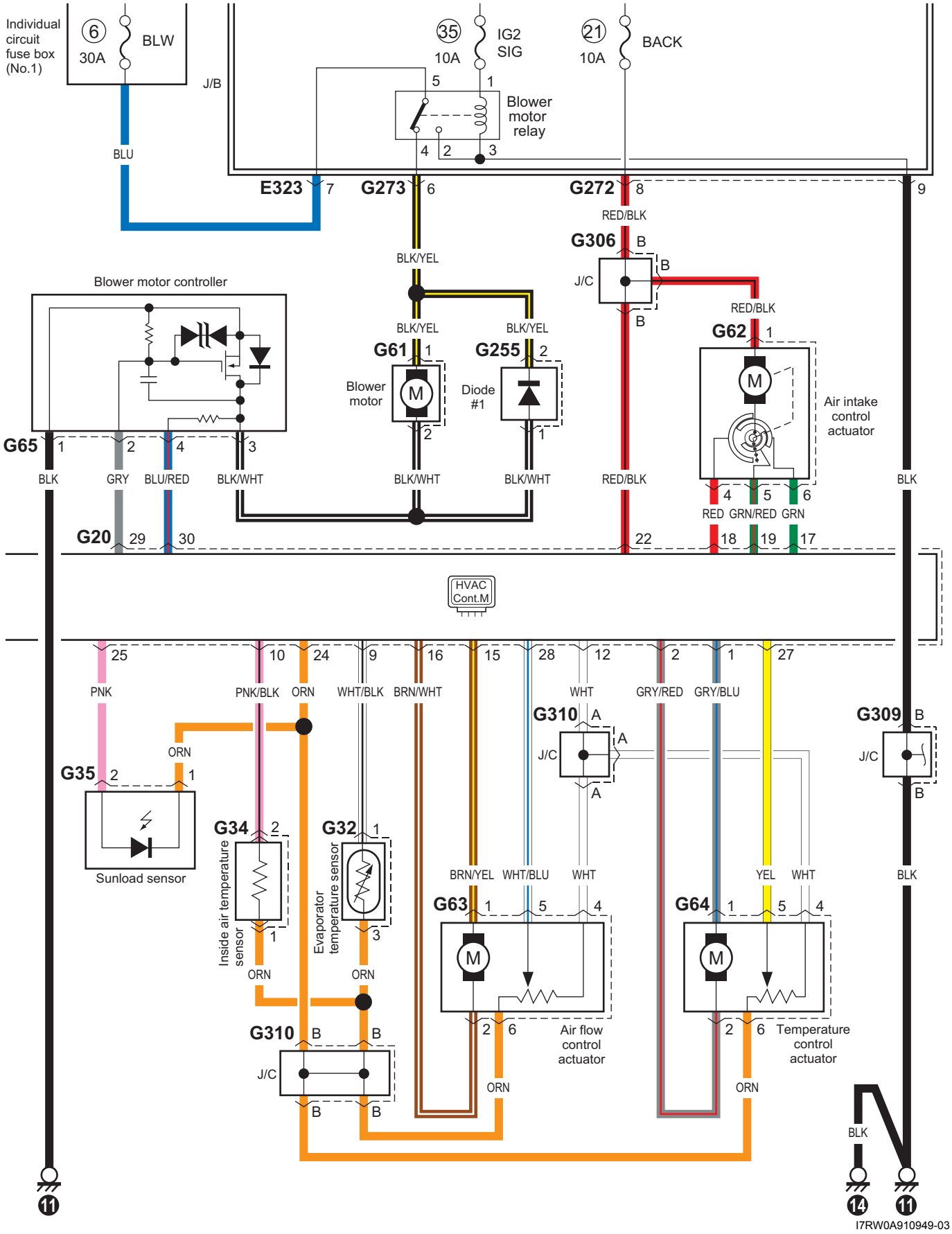
Individual circuit fuse box (No.1)
6
30A
BLW
BLU
J/B
35
10A
IG2 SIG
21
10A
BACK
Blower motor relay
E323
G273
G272
RED/BLK
G306
J/C
BLK/YEL
Blower motor controller
G61
Blower motor
G255
Diode #1
G62
Air intake control actuator
G65
BLK
GRY
BLU/RED
BLK/WHT
RED/BLK
RED
GRN/RED
GRN
G20
HVAC Cont.M
PNK
PNK/BLK
ORN
WHT/BLK
BRN/WHT
WHT
GRY/RED
GRY/BLU
G310
G309
G35
Sunload sensor
G34
Inside air temperature sensor
G32
Evaporator temperature sensor
BRN/YEL
WHT/BLU
YEL
G63
G64
Air flow control actuator
Temperature control actuator
11
14
I7RW0A910949-03

F-1 Air-Bag System Circuit Diagram (4ch)

S7RW0A910E050

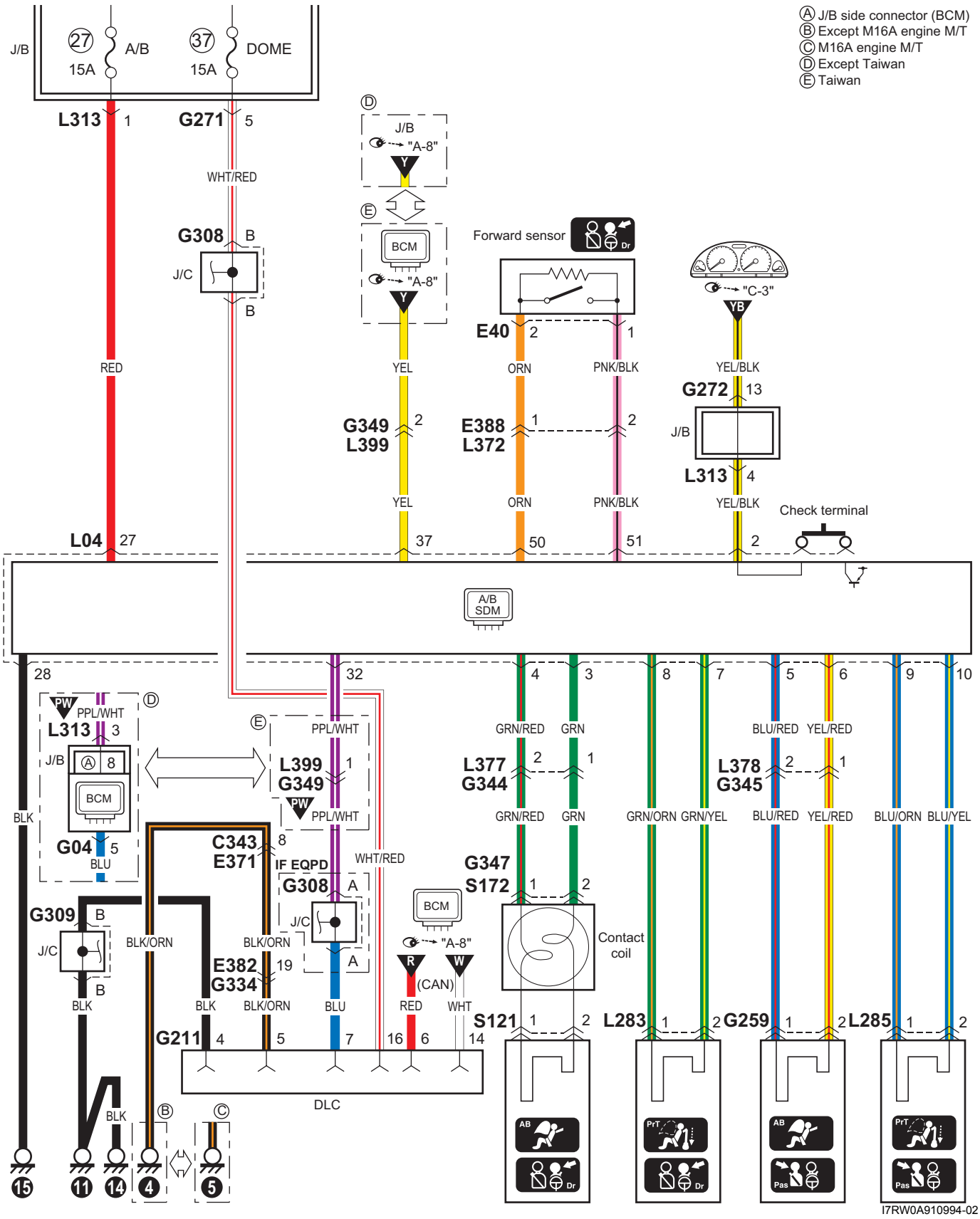

I7RW0A910994-02

F-1 Air-Bag System Circuit Diagram (8ch)

S7RW0A910E051

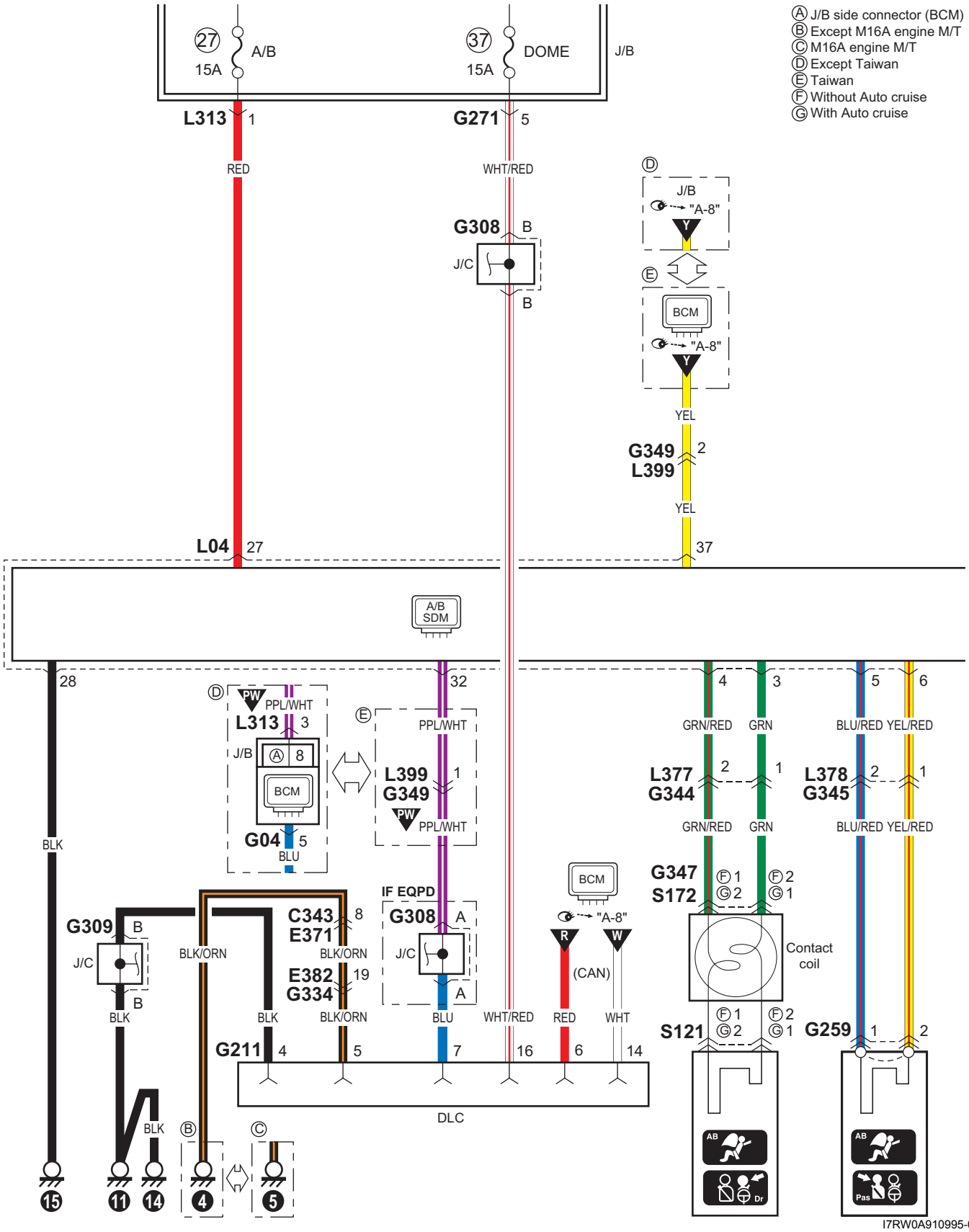

I7RW0A910995-02

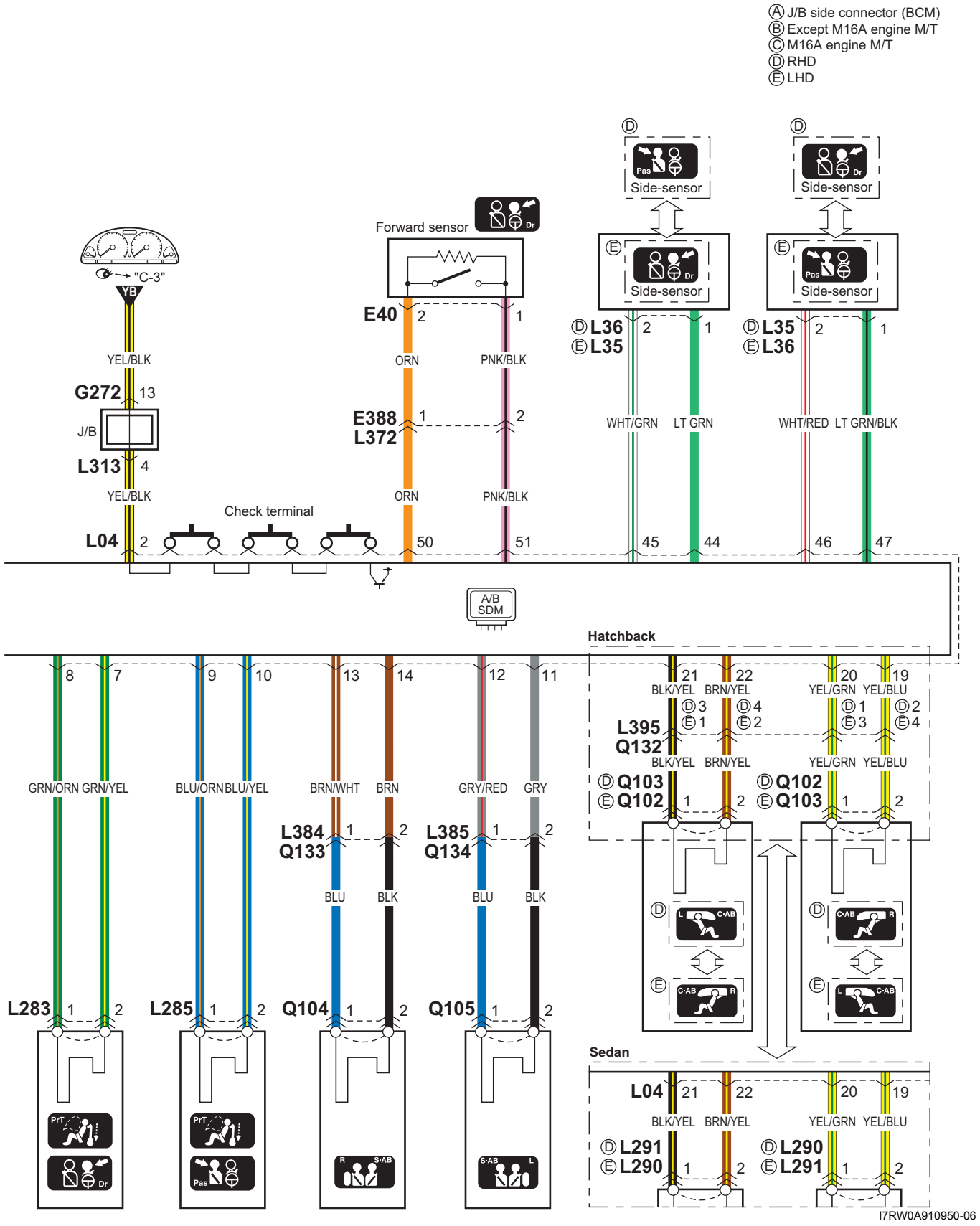
Ⓐ J/B side connector (BCM)
Ⓑ Except M16A engine M/T
Ⓒ M16A engine M/T
Ⓓ RHD
Ⓔ LHD
Side-sensor
Forward sensor
"C-3"
YB
YEL/BLK
G272
13
J/B
L313
4
YEL/BLK
L04
2
Check terminal
E40
2
1
ORN
PNK/BLK
E388
L372
1
2
ORN
PNK/BLK
50
51
Ⓓ L36
Ⓔ L35
2
1
WHT/GRN
LT GRN
45
44
Ⓓ L35
Ⓔ L36
2
1
WHT/RED
LT GRN/BLK
46
47
A/B SDM
Hatchback
8
7
9
10
13
14
12
11
GRN/ORN
GRN/YEL
BLU/ORN
BLU/YEL
BRN/WHT
BRN
GRY/RED
GRY
L384
Q133
L385
Q134
BLU
BLK
BLU
BLK
L283
L285
Q104
Q105
21
22
20
19
BLK/YEL
BRN/YEL
YEL/GRN
YEL/BLU
L395
Q132
Ⓓ Q103
Ⓔ Q102
Ⓓ Q102
Ⓔ Q103
Sedan
L04
Ⓓ L291
Ⓔ L290
Ⓓ L290
Ⓔ L291
I7RW0A910950-06

F-2 Anti-Lock Brake System Circuit Diagram

S7RW0A910E052

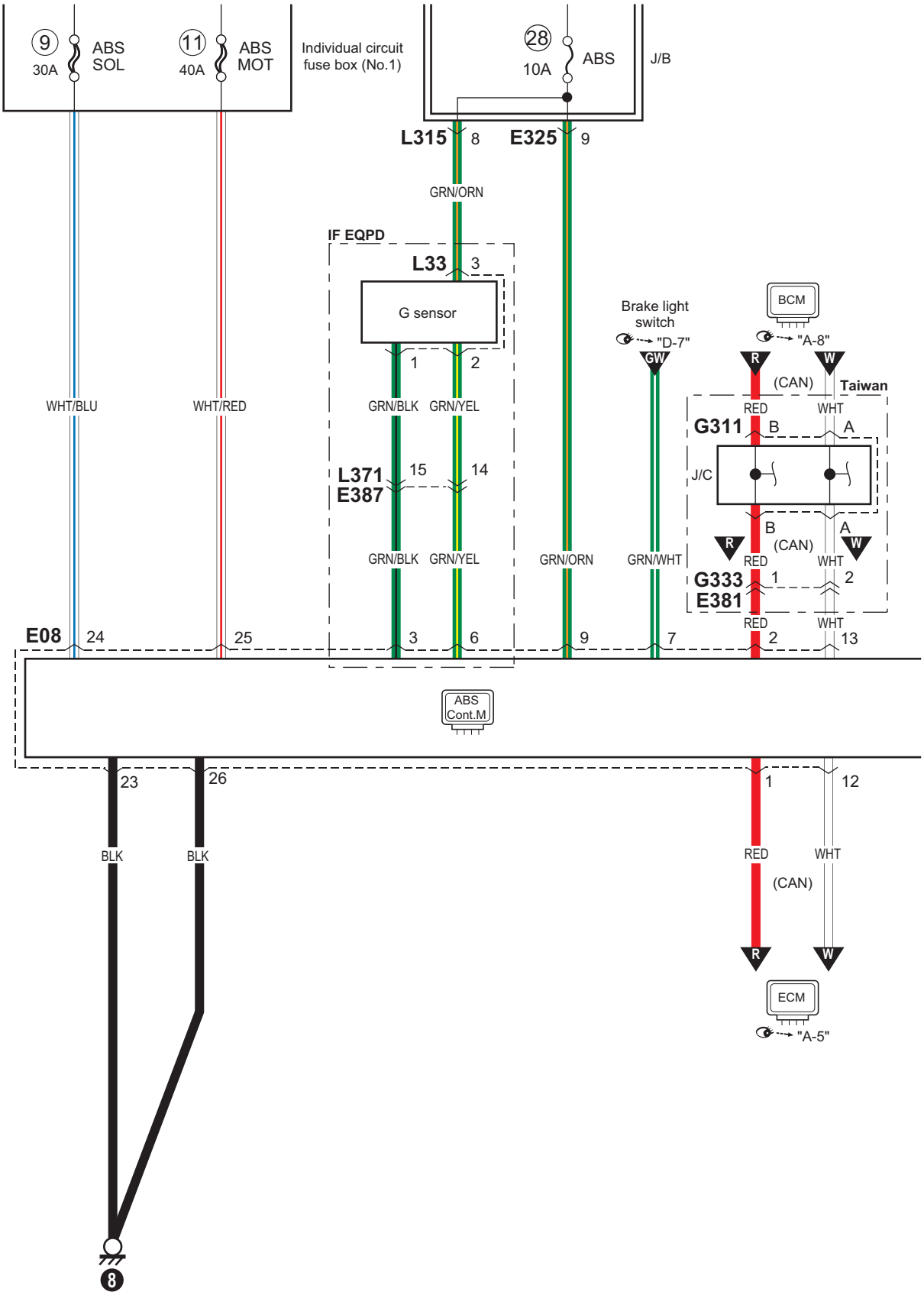

I7RW0A910996-02

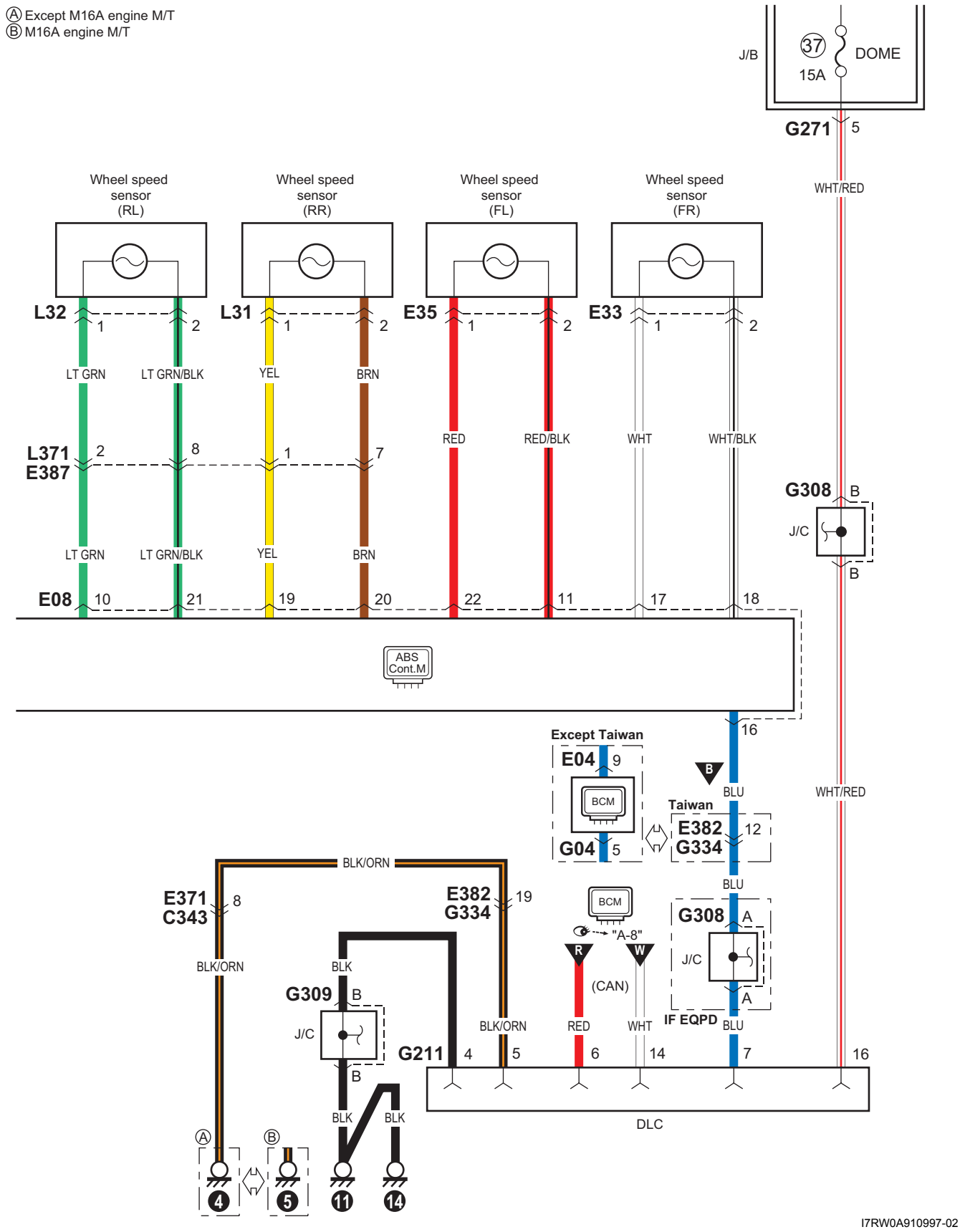
Ⓐ Except M16A engine M/T
Ⓑ M16A engine M/T
J/B
37
DOME
15A
G271
5
WHT/RED
Wheel speed sensor (RL)
Wheel speed sensor (RR)
Wheel speed sensor (FL)
Wheel speed sensor (FR)
L32
L31
E35
E33
LT GRN
LT GRN/BLK
YEL
BRN
RED
RED/BLK
WHT
WHT/BLK
L371
E387
G308
J/C
E08
ABS Cont.M
Except Taiwan
E04
BCM
G04
Taiwan
E382
G334
BLU
BLK/ORN
E371
C343
BLK
G309
G308
"A-8"
(CAN)
IF EQPD
G211
DLC
I7RW0A910997-02

F-3 Electronic Stability Program System Circuit Diagram

S7RW0A910E063

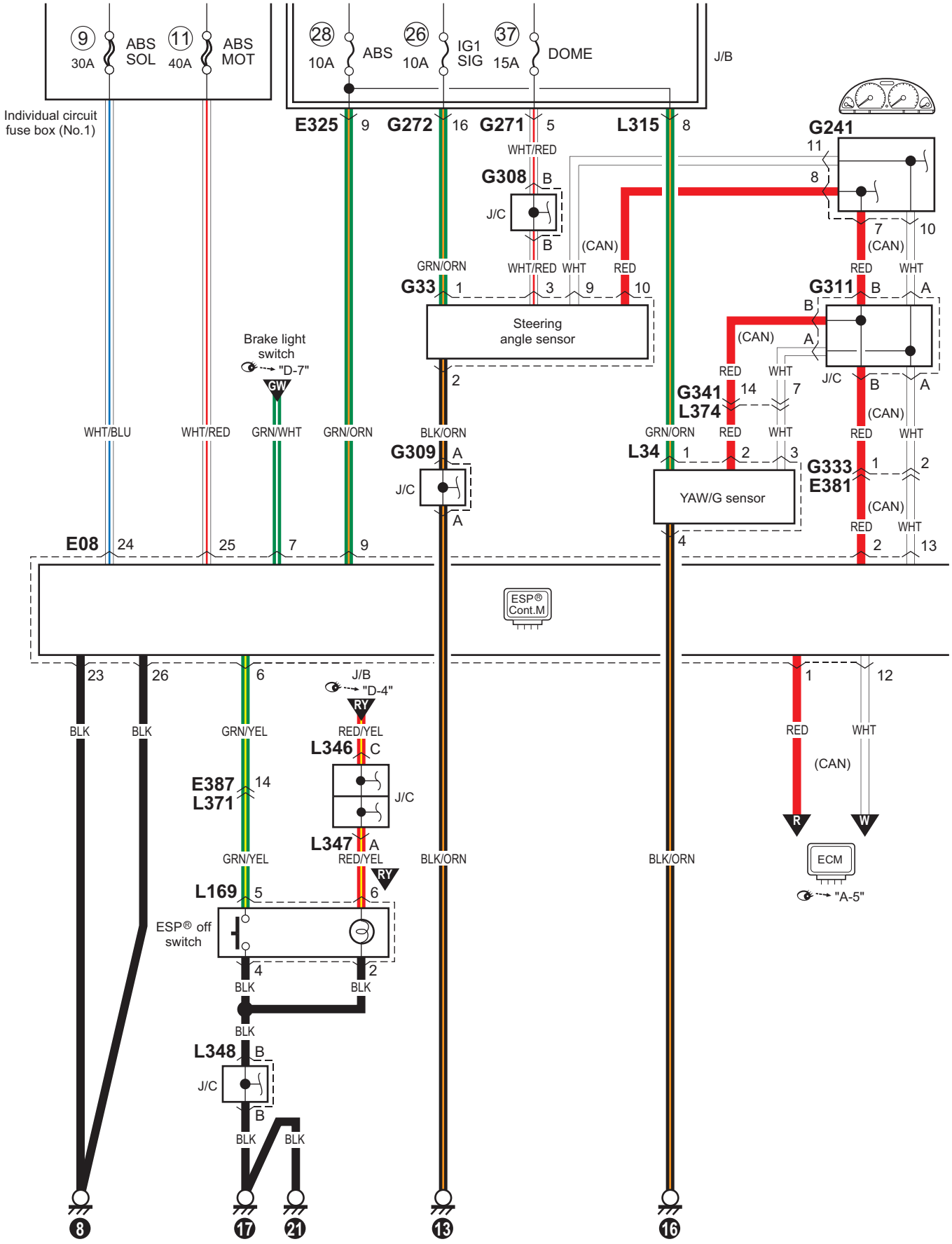

I7RW0A910951-03

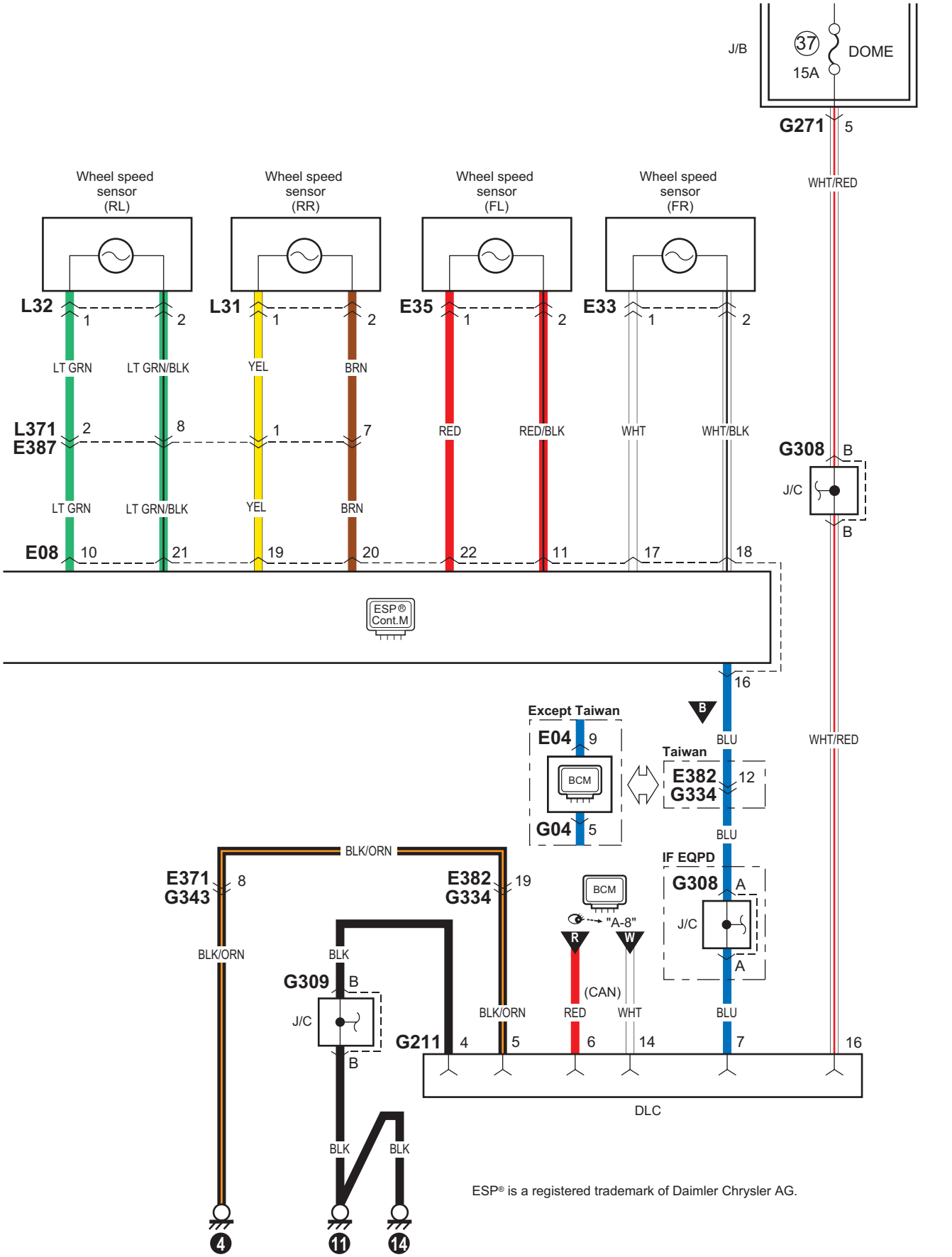
J/B
37
DOME
15A
G271
5
WHT/RED
Wheel speed sensor (RL)
Wheel speed sensor (RR)
Wheel speed sensor (FL)
Wheel speed sensor (FR)
L32
L31
E35
E33
LT GRN
LT GRN/BLK
YEL
BRN
RED
RED/BLK
WHT
WHT/BLK
L371
E387
E08
G308
J/C
ESP® Cont.M
16
BLU
Except Taiwan
E04
BCM
G04
Taiwan
E382
G334
IF EQPD
BLK/ORN
E371
G343
BLK
G309
"A-8"
(CAN)
G211
DLC
ESP® is a registered trademark of Daimler Chrysler AG.
I7RW0A910952-03

F-4 Power Steering System Circuit Diagram

S7RW0A910E053

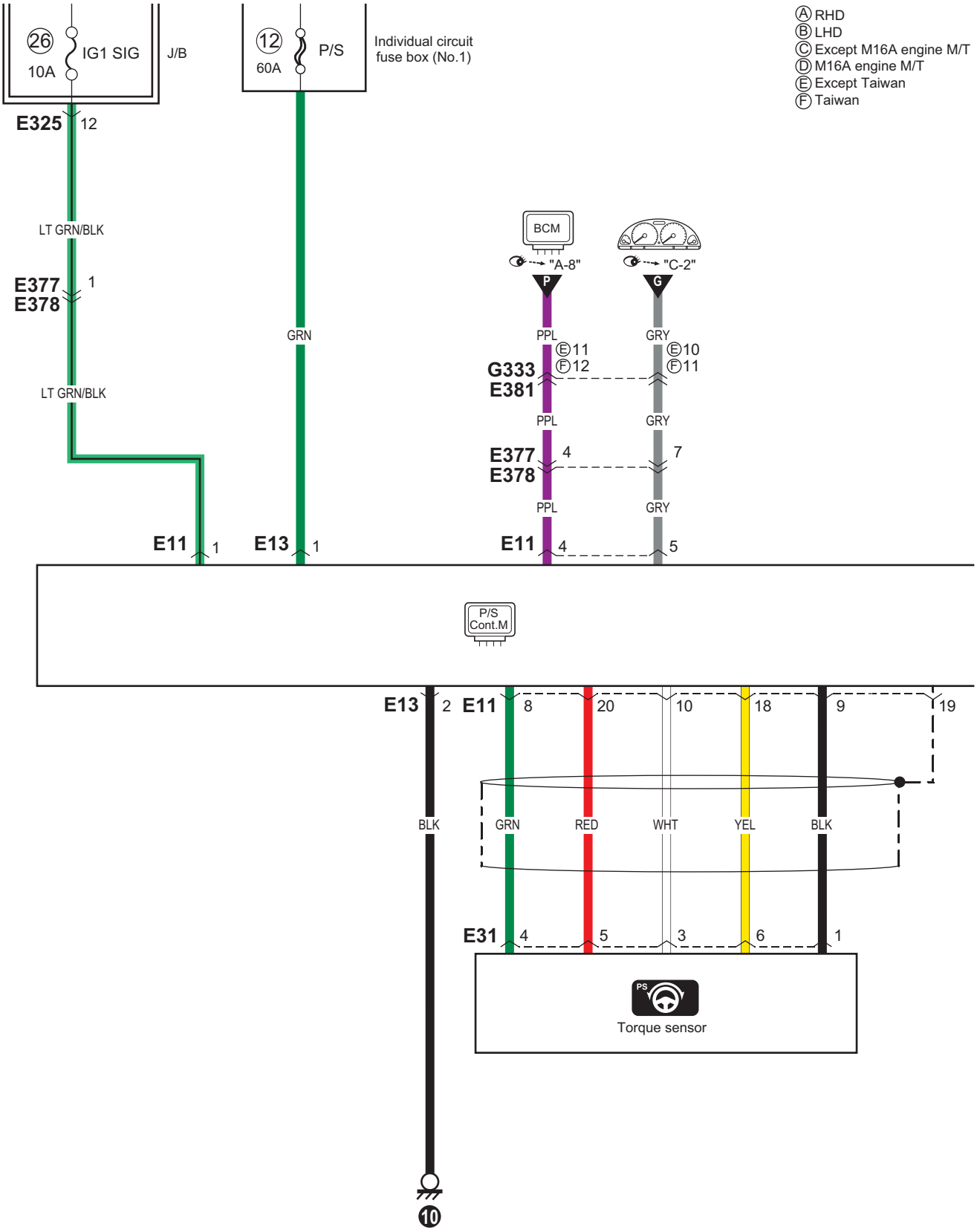

I7RW0A910998-02

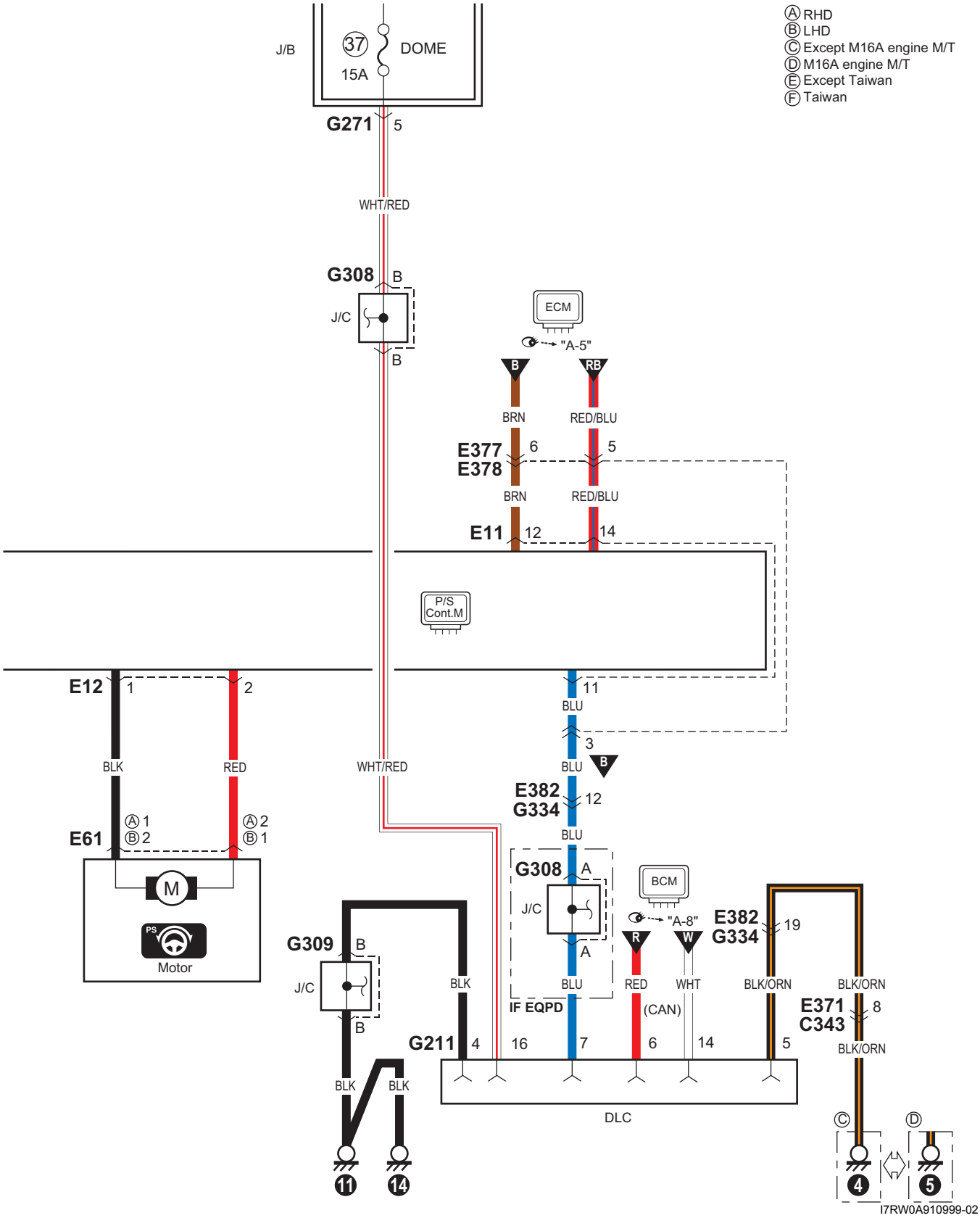
Ⓐ RHD
Ⓑ LHD
Ⓒ Except M16A engine M/T
Ⓓ M16A engine M/T
Ⓔ Except Taiwan
Ⓕ Taiwan
J/B
37
DOME
15A
G271
5
WHT/RED
G308
B
J/C
B
ECM
"A-5"
B
RB
BRN
RED/BLU
E377
E378
6
5
BRN
RED/BLU
E11
12
14
P/S
Cont.M
E12
1
2
BLK
RED
WHT/RED
11
BLU
3
BLU
B
E382
G334
12
BLU
E61
Ⓐ 1
Ⓑ 2
Ⓐ 2
Ⓑ 1
M
PS
Motor
G308
A
J/C
A
BLU
IF EQPD
BCM
"A-8"
R
W
RED
WHT
(CAN)
E382
G334
19
BLK/ORN
BLK/ORN
E371
C343
8
BLK/ORN
G309
B
J/C
B
BLK
G211
4
16
7
6
14
5
DLC
BLK
BLK
11
14
Ⓒ
Ⓓ
4
5
I7RW0A910999-02

G-1 Audio System Circuit Diagram

S7RW0A910E054

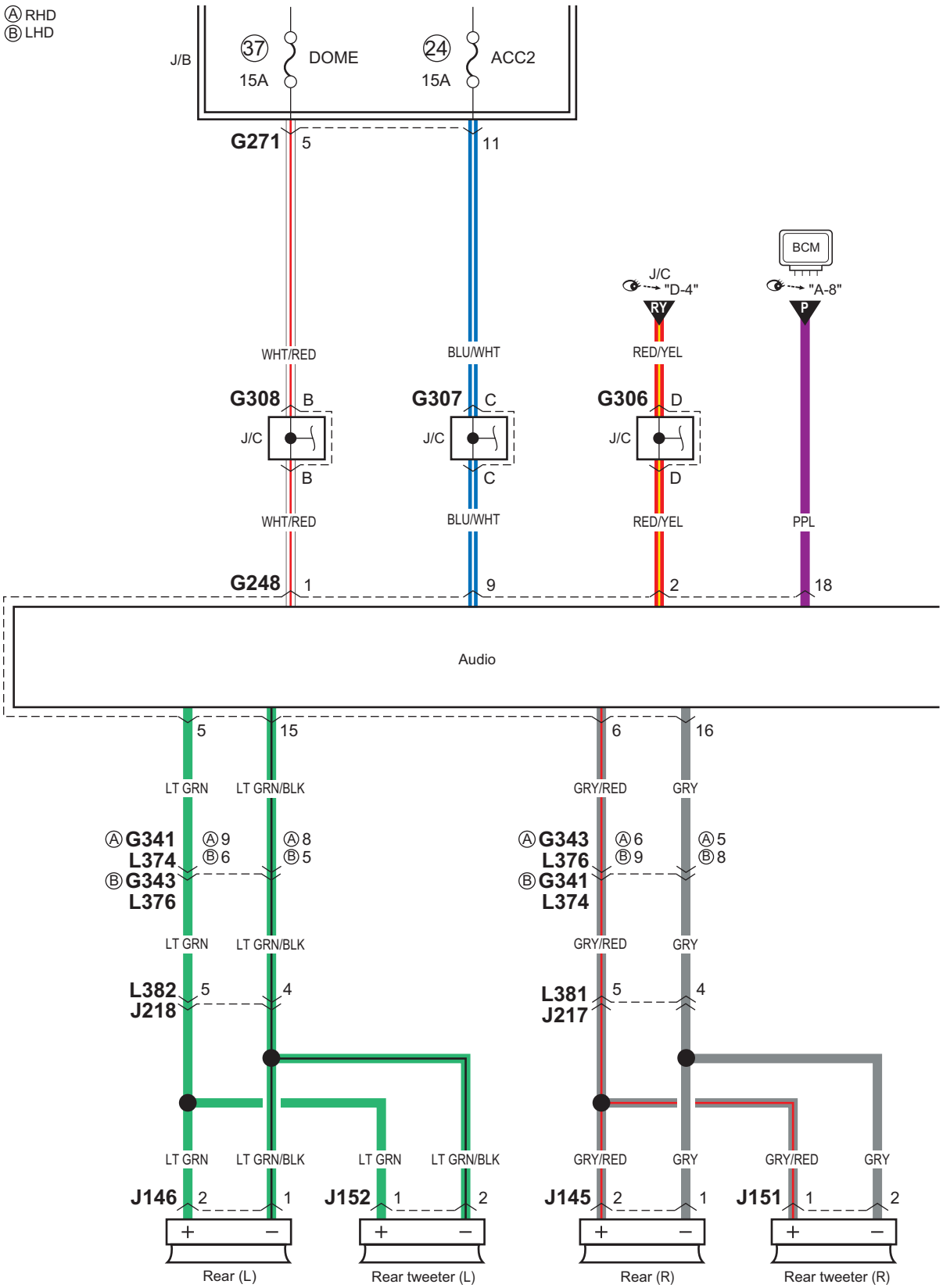

I7RW0A910953-02

Ⓐ RHD
Ⓑ LHD
Ⓒ Without Auto cruise
Ⓓ With Auto cruise
Ⓔ Except Taiwan
Ⓕ Taiwan
Ⓖ Without ILL cancel switch
Ⓗ With ILL cancel switch

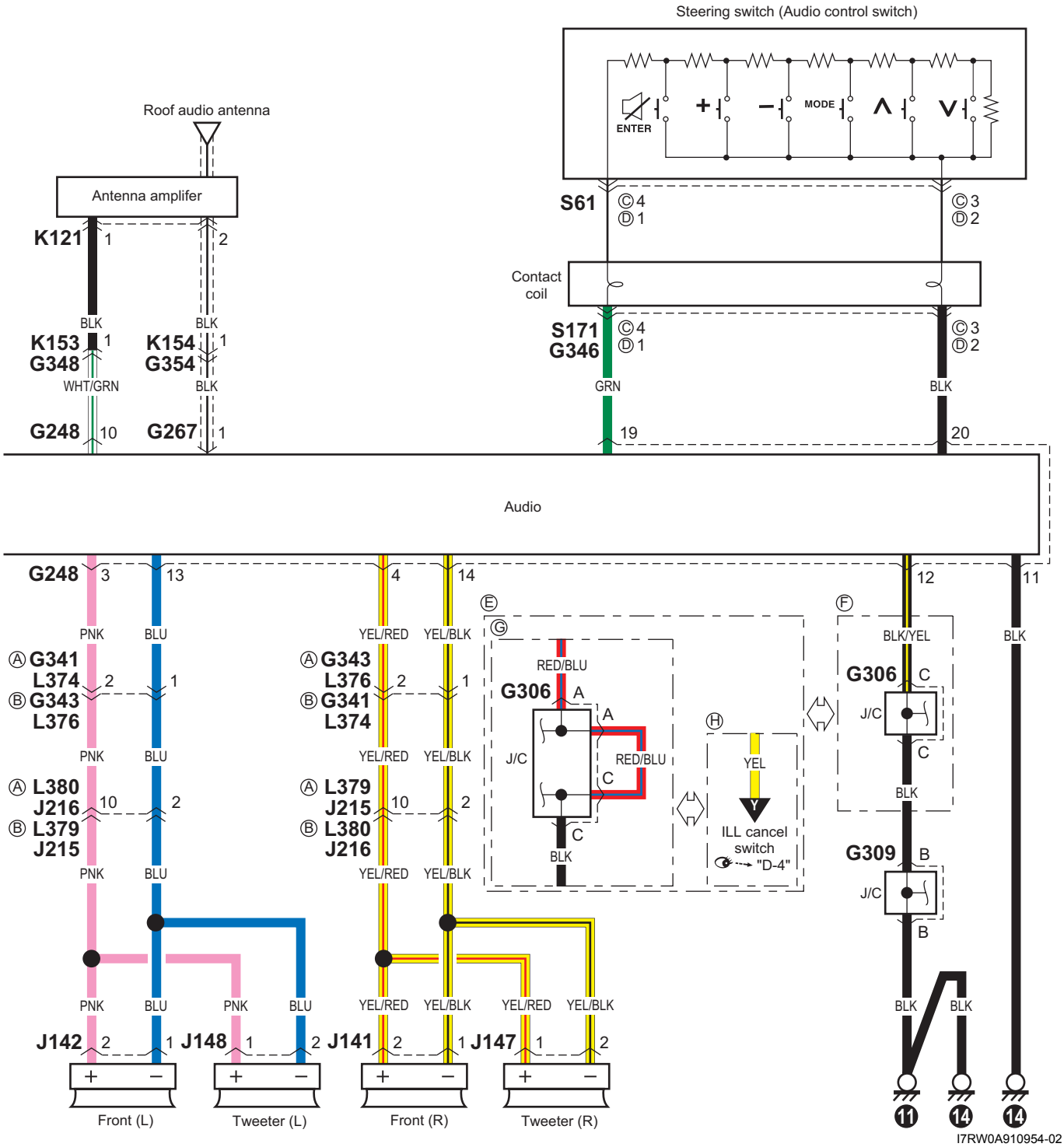

G-2 Multi Information Display / Accessory Socket System Circuit Diagram

S7RW0A910E055

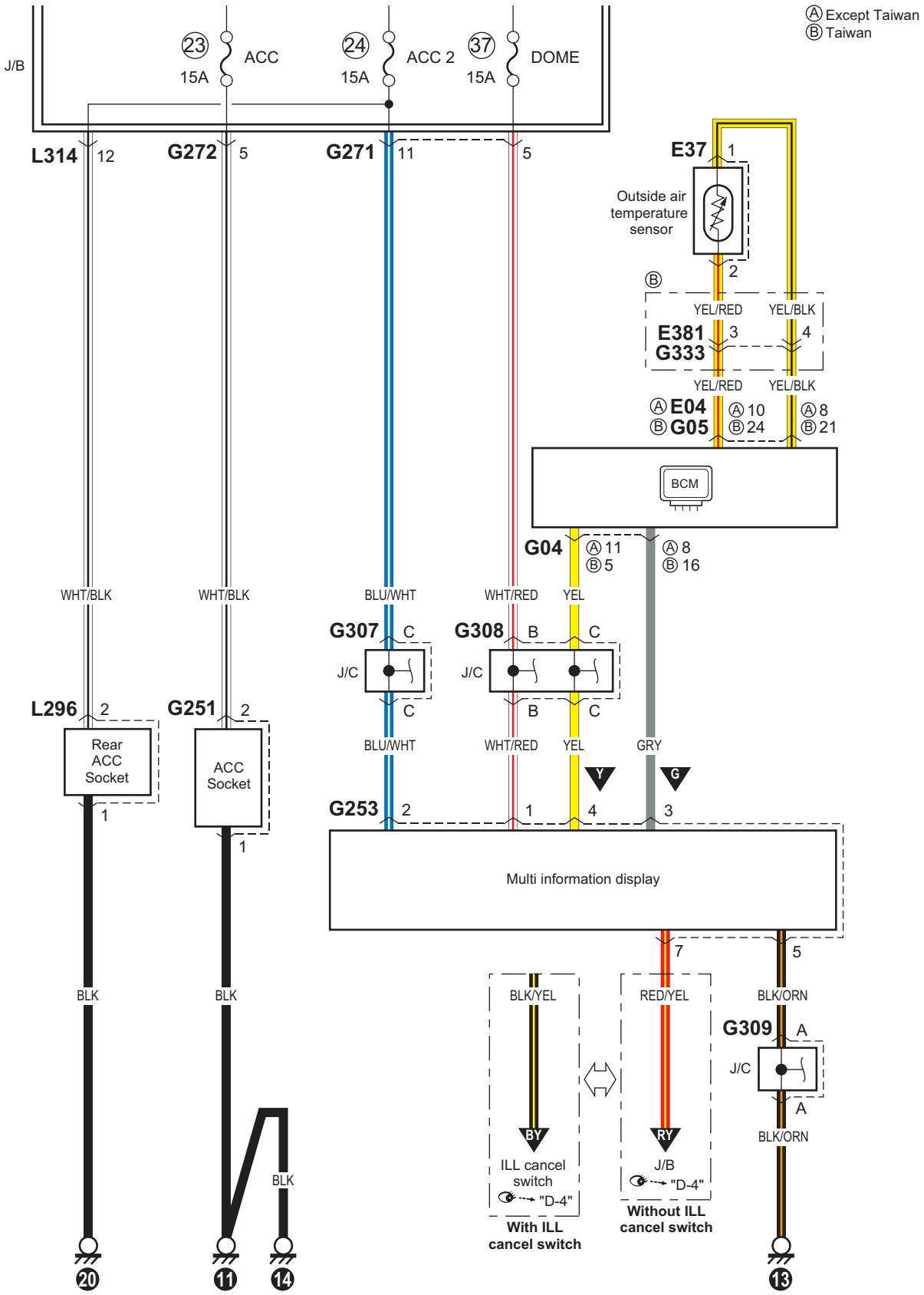

I7RW0A910955-03

G-4 Navigation System Circuit Diagram

S7RW0A910E056

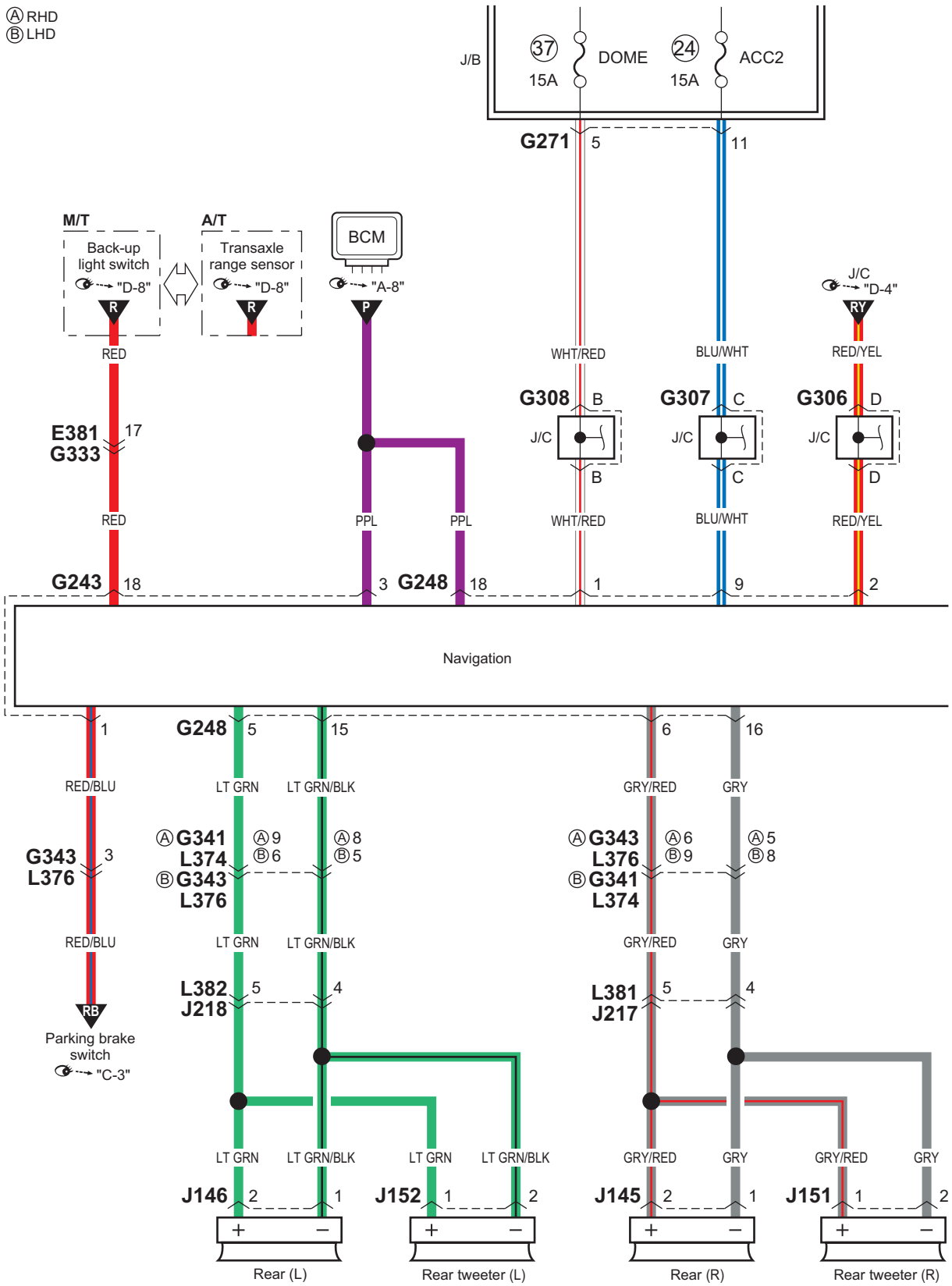

I7RW0A910956-02

Ⓐ RHD
Ⓑ LHD
Ⓒ Except Taiwan
Ⓓ Taiwan
Ⓔ Without ILL cancel switch
Ⓕ With ILL cancel switch

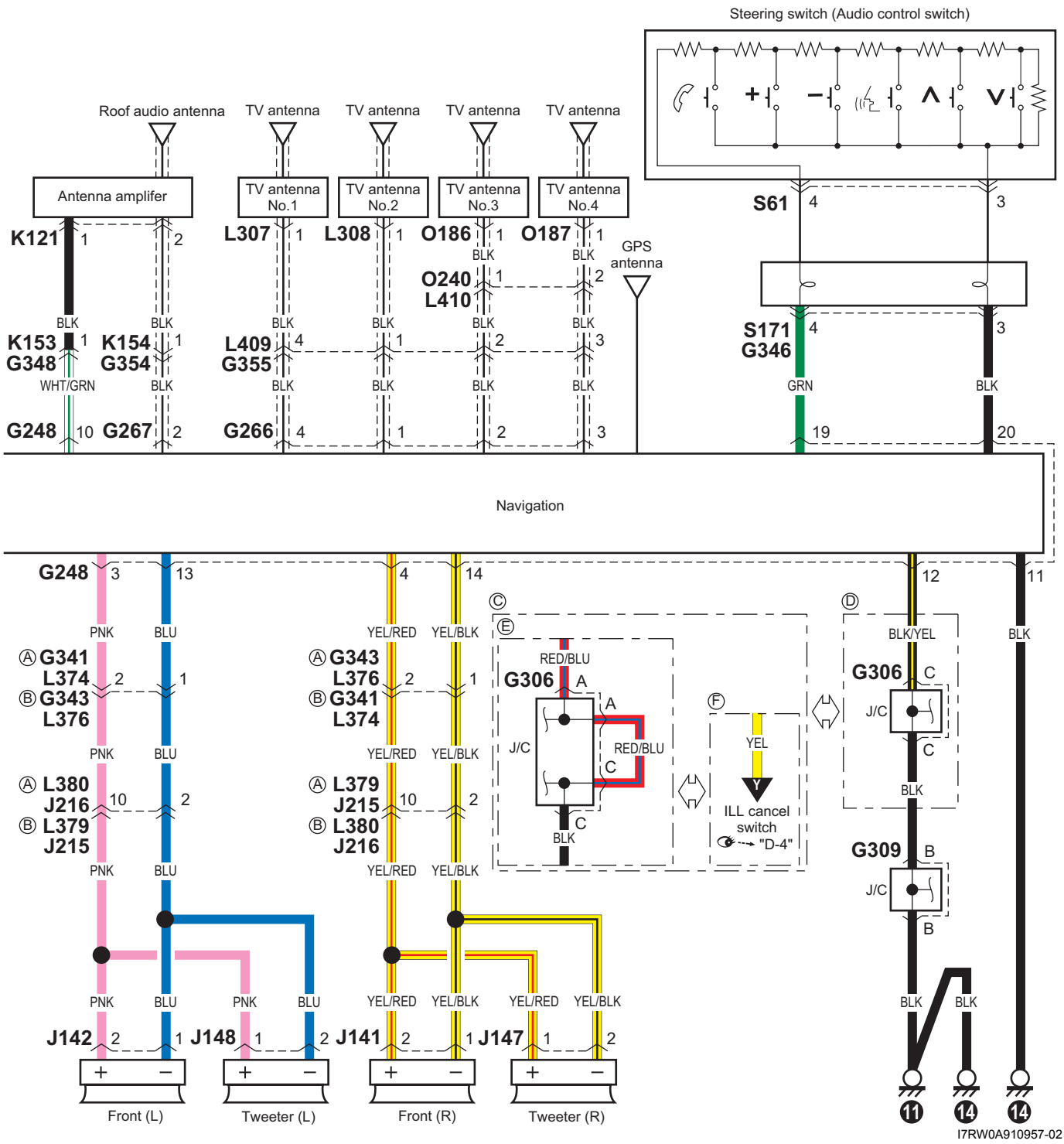

List of Connector

List of Connectors

S7RW0A910F001

Refer to “C Connector”.
Refer to “E Connector”.
Refer to “G Connector”.
Refer to “J Connector”.
Refer to “K Connector”.
Refer to “L Connector”.
Refer to “M Connector (Sedan)”.
Refer to “O Connector (Hatchback)”.
Refer to “Q Connector (8ch)”.
Refer to “R Connector”.
Refer to “S Connector”.

C Connector

S7RW0A910F002

C01 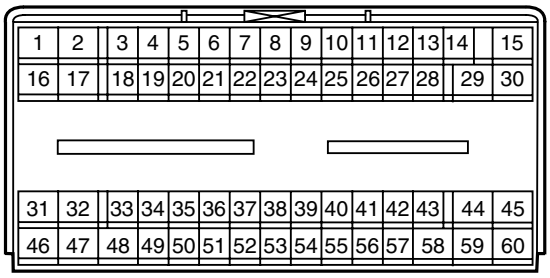 MCONF600002-01		C06 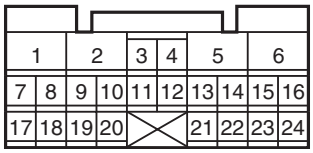 MCONF240020-01 A/T		
C07 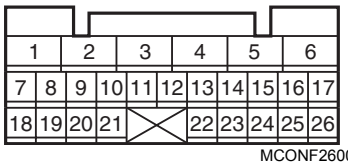 MCONF260020-01 A/T	C31 MCONF030103-02 M15A engine, M16A engine	C31 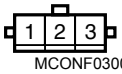 MCONF030038-01 J20A engine	C32 MCONF030123-01 With OCV	C32 MCONF030103-02 Without OCV
C32 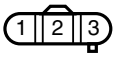 MCONF030053-01 J20A engine	C34 MCONF030103-02 A/T	C36 MCONF030030-01 M15A engine, M16A engine	C37 MCONF010054-01	C39 MCONF020042-01	C40 MCONF040102-02 M15A engine
C40 MCONF040024-01 J20A engine	C42 MCONF040024-01 M15A engine	C42 MCONF040102-02 M16A engine, J20A engine	C43 MCONF040024-01 M16A engine	C44 MCONF020150-01 A/T	C45 MCONF020150-01 J20A engine A/T
C46 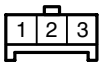 MCONF030040-01 M15A engine, J20A engine	C47 MCONF050025-01 M15A engine, M16A engine	C47 MCONF050050-01 J20A engine	C48 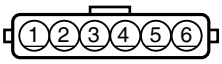 MCONF060068-01		C64 MCONF020150-01 J20A engine

C91 MCONF020266-01	C92 MCONF020266-01	C93 MCONF020266-01	C94 MCONF020266-01	C101 MCONF030055-01 M15A engine, M16A engine	C101 MCONF030103-02 J20A engine
C102 MCONF030055-01 M15A engine, M16A engine	C102 MCONF030103-02 J20A engine	C103 MCONF030103-02 J20A engine	C104 MCONF030103-02 J20A engine	C122 MCONF060018-01 IF EQPD	C123 MCONF020042-01 M15A engine, M16A engine
C123 MCONF020150-01 J20A engine	C124 MCONM020033-01 IF EQPD	C139 MCONF100049-01 M15A engine A/T, M16A engine A/T	C139 MCONF080028-02 J20A engine A/T	C141 MCONF010076-01	C162 MCONF010030-01
C163 MCONF010001-01 J20A engine	C165 MCONF020176-01 M/T	C166 MCONF090011-01 M15A engine A/T, M16A engine A/T	C166 MCONF110011-02 J20A engine A/T	C192 MCONF010057-03	C194 MCONF040127-01
C195 MCONF010021-01	C196 MCONF010057-03	C282 MCONF010078-01	C283 MCONF010074-01	C343 (TO E371) MCONF200011-01	

E Connector

S7RW0A910F003

E01 MCONF600002-01	E04 MCONF140012-01 Except Taiwan	
E08 MCONF260018-01	E11 MCONF200029-01	E12 MCONF020204-01

E13 MCONF020185-01	E31 MCONF060052-01	E33 MCONM020033-01	E35 MCONM020033-01	E36 MCONF030062-01	E37 MCONF020200-01
E40 MCONF020199-01	E61 MCONF020205-01	E62 MCONF020008-01	E63 MCONF020008-01	E64 MCONF050027-01	E65 MCONF020183-01 M16A engine
E65 MCONF040130-01 J20A engine	E68 MCONF030128-01 IF EQPD	E69 MCONF030128-01 IF EQPD	E70 MCONF020183-01	E151 MCONF030101-01	E152 MCONF030101-01
E159 MCONF020289-01	E160 MCONF020289-01	E161 MCONF020013-01	E162 MCONF020013-01	E163 MCONF020162-01	E164 MCONF020162-01
E165 MCONF020196-01	E166 MCONF020196-01	E181 MCONF040045-01	E183 MCONF020115-01	E191 MCONF060068-01	
E192 MCONF020151-01 J20A engine	E221 MCONF040131-01	E222 MCONF050044-01	E223 MCONF050044-01 J20A engine	E224 MCONF050044-01 J20A engine	E225 MCONF040131-01
E226 MCONF040131-01	E227 MCONF040131-01	E229 MCONF040131-01	E230 MCONF040131-01	E231 MCONF040131-01 A/T	E232 MCONF050044-01 IF EQPD
E233 MCONF050044-01 IF EQPD	E234 MCONF040131-01	E241 MCONF050044-01 A/T	E247 MCONF050044-01 IF EQPD	E248 MCONF050044-01 IF EQPD	E281 MCONF010079-01
E311 MCONF020201-01	E312 MCONF020202-01	E323 MCONF100054-01	E324 MCONF020202-01	E325 MCONF160034-01	

E371 (TO C343)

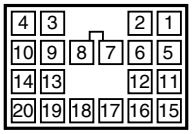

MCONM200005-01

E377 (TO E378)

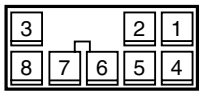

MCONM080012-01

E378 (TO E377)

MCONF080050-01

E381 (TO G333)

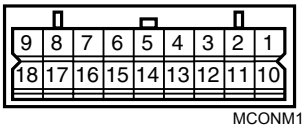

MCONM180001-01

E382 (TO G334)

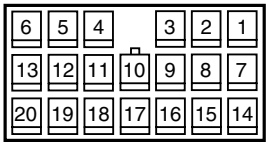

MCONM200004-01

E387 (TO L371)

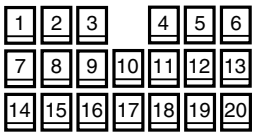

MCONF200008-01

E388 (TO L372)

MCONF020151-01

G Connector

S7RW0A910F004

G04

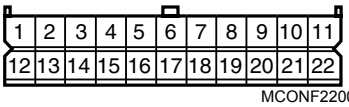

MCONF220009-01

Except Taiwan

G04

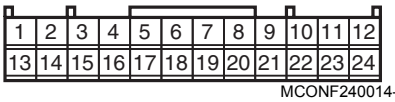

MCONF240014-01

Taiwan

G05

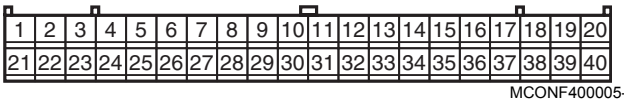

MCONF400005-01

Taiwan

G06

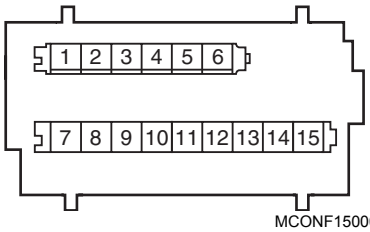

MCONF150005-01

Taiwan

G14

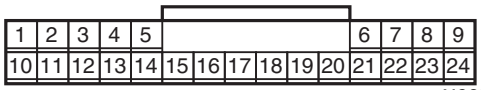

MCONF240015-01

IF EQPD

G16

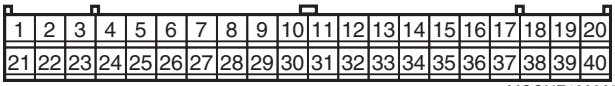

MCONF400005-01

IF EQPD

G17

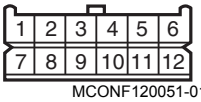

MCONF120051-01

G20

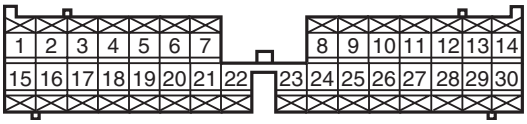

MCONF300004-01

Auto A/C

G26

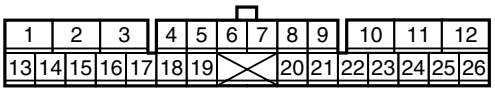

MCONF260010-01

IF EQPD

G32

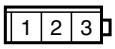

MCONF030078-01

G33

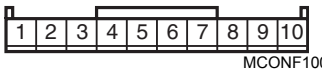

MCONF100064-01

IF EQPD

G34

MCONF020111-01

Auto A/C

G35

MCONF020111-01

Auto A/C

G61

MCONF020008-01

G62

MCONF060093-01

G63

MCONF060093-01

Auto A/C

G64

MCONF060093-01

Auto A/C

G65

MCONF040009-01

Auto A/C

G65

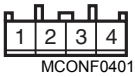

MCONF040142-01

Manual A/C

G141

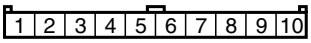

MCONF100038-01

G144

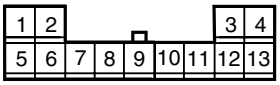

MCONF130010-01

G146

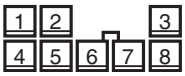

MCONF080050-01

G147

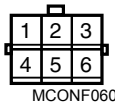

MCONF060063-01

G150

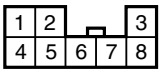

MCONF080002-01

IF EQPD

G151

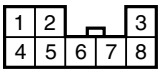

MCONF080002-01

G152

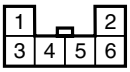

MCONF060025-01

IF EQPD

G153

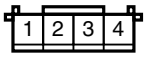

MCONF040098-01

G154

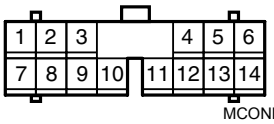

MCONF140018-01

Manual A/C

G155

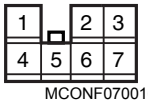

MCONF070016-01

Manual A/C

G211

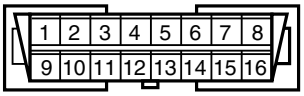

MCONF160023-01

G214

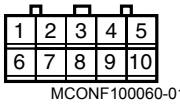

MCONF100060-01

IF EQPD

G241

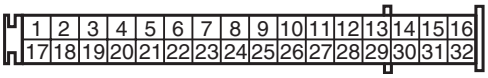

MCONF320015-01

G243

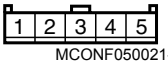

MCONF050021-01

IF EQPD

G248

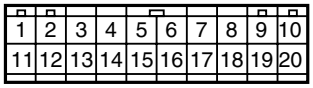

MCONF200012-01

G251

MCONF020304-01

G253

MCONF070004-01

G254

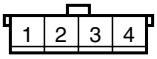

MCONF040096-01

IF EQPD

G255

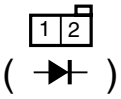

MCONF020147-01

Auto A/C

G259

MCONF020235-01

G265

MCONF010010-01

Taiwan

G266

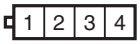

MCONF040146-01

IF EQPD

G267

MCONF020305-01

With Navigation

G267

MCONM010040-01

Without Navigation

G271

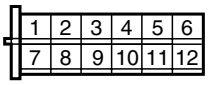

MCONF120028-01

G272

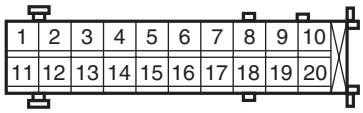

MCONF200020-01

G273

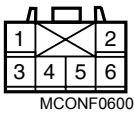

MCONF060064-01

G306

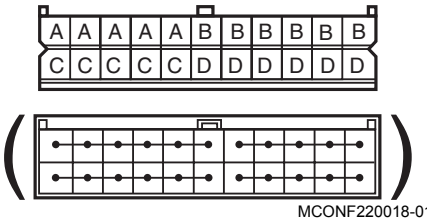

MCONF220018-01

G307

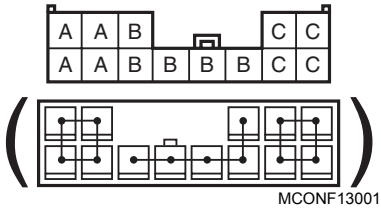

MCONF130019-01

IF EQPD

G308

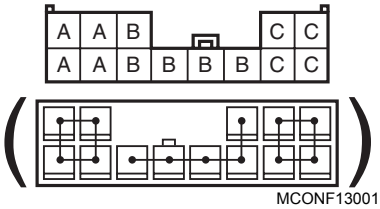

MCONF130019-01

G309

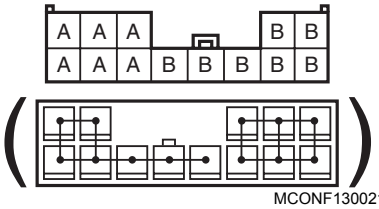

MCONF130021-01

G310 MCONF070023-01 Auto A/C	G311 MCONF130021-01	G333 (TO E381) MCONF180012-01	
G334 (TO E382) MCONF200008-01	G335 (TO E383) MCONF100060-01 IF EQPD	G341 (TO L374) MCONM140005-02	
G342 (TO L375) MCONM200008-01 IF EQPD	G343 (TO L376) MCONM200005-01	G344 (TO L377) MCONM020065-01	G345 (TO L378) MCONM020065-01
G346 (TO S171) MCONF120052-01 With auto cruise	G346 (TO S171) MCONF060080-01 Without auto cruise	G347 (TO S172) MCONF040099-01 With auto cruise	G347 (TO S172) MCONF020212-01 Without auto cruise
G348 (TO K153) MCONM010017-01	G349 (TO L399) MCONF020151-01 Taiwan	G352 (TO L402) MCONM140005-02 IF EQPD	G354 (TO K154) MCONF010046-01
G355 (TO L409) MCONM040035-01 IF EQPD			

J Connector

S7RW0A910F005

J21 MCONF020236-01 Type A	J21 MCONF060087-01 Type B	J22 MCONF020236-01	J25 MCONF020236-01	J26 MCONF020236-01	J27 MCONM070004-01
J28 MCONM070004-01	J31 MCONF100054-01	J32 MCONF100054-01	J35 MCONF100054-01	J36 MCONF100054-01	
J81 MCONF180006-01	J82 MCONF050001-01	J83 MCONF050001-01	J84 MCONF050001-01	J85 MCONM020016-01 IF EQPD	
J86 MCONM020016-01 IF EQPD	J87 MCONF130011-01	J141 MCONF020008-01	J142 MCONF020008-01	J145 MCONF020008-01	

J146	J147	J148	J151	J152	J153
1 2 MCONF020008-01	1 2 MCONF020159-01 IF EQPD	1 2 MCONF020159-01 IF EQPD	1 2 MCONF020159-01 IF EQPD	1 2 MCONF020159-01 IF EQPD	2 1 MCONM020018-01 IF EQPD
J154	J215 (L379)	J216 (L380)	J217 (TO L381)	J218 (TO L382)	
2 1 MCONM020018-01 IF EQPD	26 25 24 34 23 33 22 32 21 31 30 29 20 28 19 27 18 17 16 15 14 13 12 6 11 5 4 3 10 2 9 1 8 7 MCONM340003-02	26 25 24 34 23 33 22 32 21 31 30 29 20 28 19 27 18 17 16 15 14 13 12 6 11 5 4 3 10 2 9 1 8 7 MCONM340003-02	1 2 3 4 5 6 7 8 9 10 MCONF100060-01	1 2 3 4 5 6 7 8 9 10 MCONF100060-01	

K Connector

S7RW0A910F006

K51	K52	K121	K121	K152 (TO L383)	K152 (TO L383)
1 2 3 MCONF030134-01	1 2 MCONF020157-01	1 2 MCONM020068-01 Hatchback	2 1 MCONM020065-01 Sedan	3 2 1 MCONM030021-01 Hatchback	1 2 3 MCONF030134-01 Sedan
K153 (TO G348)	K154 (TO G354)				
1 MCONF010010-01	1 MCONM010040-01				

L Connector

S7RW0A910F007

L01	L04
1 2 3 4 5 6 7 8 9 10 11 12 13 14 15 16 17 18 MCONF180012-01 Except Taiwan	1 2 3 4 5 6 7 8 9 10 11 12 13 14 15 16 17 18 19 20 21 22 23 24 25 26 27 28 29 30 31 32 33 34 35 36 37 38 39 40 41 42 43 44 45 46 47 48 49 50 51 MCONF510001-01

L31 MCONM020066-01	L32 MCONM020066-01	L33 MCONF030123-01 IF EQPD	L34 MCONF040122-01 IF EQPD	L35 MCONF020210-01 8ch	L36 MCONF020210-01 8ch
L37 MCONM030023-01 IF EQPD	L40 MCONF020042-01 IF EQPD	L101 MCONF060044-01	L102 MCONM020058-01 IF EQPD	L132 MCONF020211-01 Hatchback	
L133 MCONF060044-01 Hatchback	L133 MCONM060012-01 Sedan	L134 MCONF060044-01 Hatchback	L134 MCONM060012-01 Sedan	L139 MCONF020013-01 Sedan	L141 MCONF020013-01 Sedan
L161 MCONF010100-01	L162 MCONF010100-01	L163 MCONF010100-01	L164 MCONF010100-01	L167 MCONF010021-01	L169 MCONF060025-01 IF EQPD
L170 MCONF020268-01	L171 MCONF060025-01 IF EQPD	L172 MCONF060025-01 IF EQPD	L173 MCONM010013-01 Sedan	L174 MCONF060025-01 IF EQPD	L233 MCONF050044-01 Sedan
L281 MCONF040132-01 IF EQPD	L282 MCONF040132-01 IF EQPD	L283 MCONF020209-01	L285 MCONF020209-01	L290 MCONF020207-01 Sedan	L291 MCONF020207-01 Sedan
L292 MCONF020266-01 IF EQPD	L293 MCONF020228-01 IF EQPD	L294 MCONF020228-01 IF EQPD	L296 MCONF020304-01 IF EQPD	L299 MCONF010021-01 Sedan	L300 MCONF010021-01 Sedan
L301 MCONF020147-01	L303 MCONM010004-01 Sedan	L307 MCONF010021-01 IF EQPD	MCONF010021-01 IF EQPD	L312 MCONF060078-01	L313 MCONF040033-01
L314 MCONF180013-01		L315 MCONF160014-01		L317 MCONF040156-01 Sedan	

L346

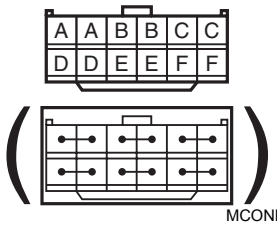

MCONF120055-01

L347

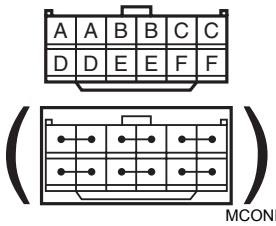

MCONF120055-01

L348

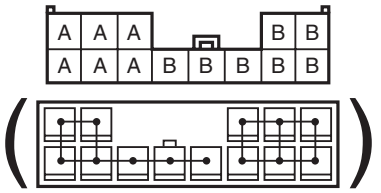

MCONF130021-01

L371 (TO E387)

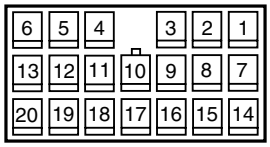

MCONM200004-01

L372 (TO E388)

MCONM020057-01

L374 (TO G341)

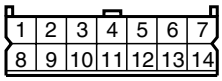

MCONF140012-01

L375 (TO G342)

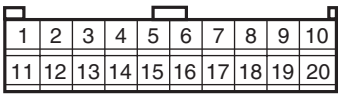

MCONF200021-01

IF EQPD

L376 (TO G343)

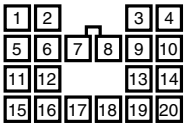

MCONF200011-01

L377 (TO G344)

MCONF020212-01

L378 (TO G345)

MCONF020212-01

L379 (J215)

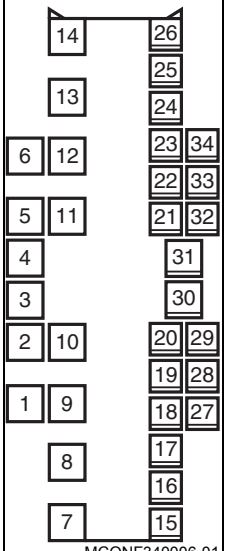

MCONF340006-01

L380 (J216)

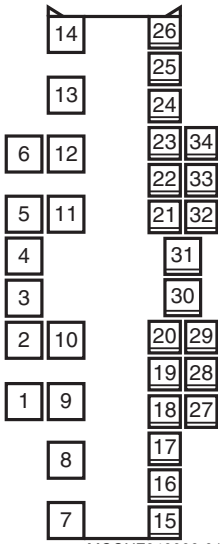

MCONF340006-01

L381 (TO J217)

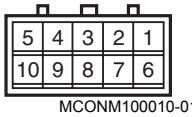

MCONM100010-01

L382 (TO J218)

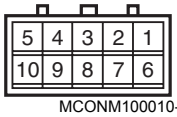

MCONM100010-01

L383 (TO K152)

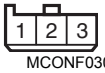

MCONF030134-01

Hatchback

L383 (TO K152)

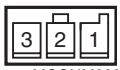

MCONM030021-01

Sedan

L384 (TO Q133)

MCONF020212-01

8ch

L385 (TO Q134) MCONF020212-01 8ch	L389 (TO R151) MCONF040123-01 Hatchback	L390 (TO O231) MCONM080013-01 Hatchback	L391 (TO O232) MCONM020056-01 IF EQPD	L393 (TO O233) MCONM020057-01 Hatchback	L394 (TO M152) MCONF060065-01 Sedan
L395 (TO Q132) MCONF040099-01 8ch	L397 (TO L408) MCONM040030-01 IF EQPD	L399 (TO G349) MCONM020057-01 IF EQPD	L402 (TO G352) MCONF140012-01 IF EQPD	L408 (TO L397) MCONF040092-01 IF EQPD	L409 (TO G355) MCONF040146-01 IF EQPD
L410 (TO O240) MCONM020067-01 IF EQPD					

M Connector (Sedan)

S7RW0A910F012

M53 MCONF020013-01	M54 MCONF020013-01	M81 MCONF020151-01	M82 MCONM040028-01	M152 (TO L394) MCONM060036-01

O Connector (Hatchback)

S7RW0A910F008

O21 MCONF040012-01	O92 MCONF020026-01	O94 MCONF020013-01	O95 MCONF020013-01	O121 MCONF040093-01	O122 MCONM040028-01
O181 MCONF010021-01	O182 MCONF010021-01	O186 MCONF010021-01 IF EQPD	O187 MCONF010021-01 IF EQPD	O231 (TO L390) MCONF080026-01	O232 (TO L391) MCONF020267-01 IF EQPD
O233 (TO L393) MCONF020151-01	O240 (TO L410) MCONF020305-01 IF EQPD				

Q Connector (8ch)

S7RW0A910F009

Q102	Q103	Q104	Q105	Q132 (TO L395)	Q133 (TO L384)
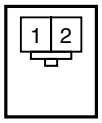 MCONF020207-01 Hatchback	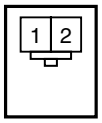 MCONF020207-01 Hatchback	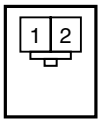 MCONF020207-01	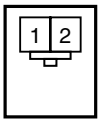 MCONF020207-01	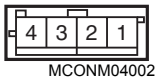 MCONM040026-01	MCONM020065-01
Q134 (TO L385) MCONM020065-01					

R Connector

S7RW0A910F010

R101	R151 (L389)
MCONF040145-01	MCONM040027-01

S Connector

S7RW0A910F011

S61	S61	S121	S121	S171 (TO G346)
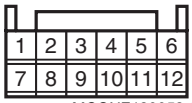 MCONF120052-01 With auto cruise	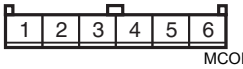 MCONF060080-01 Without auto cruise	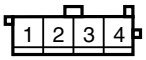 MCONF040099-01 With auto cruise	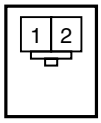 MCONF020207-01 Without auto cruise	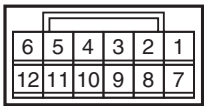 MCONM120007-01 With auto cruise
S171 (TO G346) 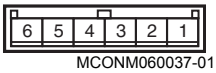 MCONM060037-01 Without auto cruise	S172 (TO G347) 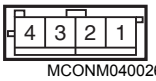 MCONM040026-01 With auto cruise	S172 (TO G347) MCONM020065-01 Without auto cruise		

Lighting Systems

Precautions

Precautions for Discharge Headlight Service (If Equipped)

S7RW0A9200001

⚠ WARNING

- **Do not touch igniter or ballast when lighting switch is at “HEAD” position to avoid possible electric shock.**
- **Do not measure voltage or resistance with tester connected to output connector of ballast or igniter to avoid possible electric shock.**
- **Do not perform work where exposed to water including rain or with wet hands to avoid possible electric shock.**
- **Disassembling igniter or ballast is strictly prohibited as it may cause an electric shock.**
- **Before inspecting or repairing discharge headlight or its peripheral parts, make sure that lighting switch is at OFF position and battery is disconnected at negative terminal to avoid possible electrical shock.**
- **Do not set lighting switch to “HEAD” position with connector disconnected or any part removed to avoid possible electric shock.**
- **Do not touch glass surface of headlight bulb. Oil or grease attached on it may not only make bulb service life shorter but also cause bulb to burst when lighting switch is turned on.**
- **Mercury, metal iodide and xenon gas are sealed in discharge headlight bulb. Be sure to dispose of used discharge headlight bulb properly according to applicable rules or regulations.**

Precautions in Diagnosing Troubles (Headlight Auto Leveling System)

S7RW0A9200002

- Be sure to read “Air Bag Warning in Section 00” before inspection and observe what is written there.
- Replacement of height sensor and headlight leveling control module. When height sensor and/or headlight leveling control module is replaced with new one, perform initialization of headlight auto leveling system according to “Initialization of Headlight Auto Leveling System”.

General Description

Discharge Headlight Description (If Equipped)

S7RW0A9201001

Discharge headlight provides more brightness and consumes less electricity as compared with the conventional halogen headlight. It consists of a ballast (1), igniter (2) and discharge headlight bulb (3).

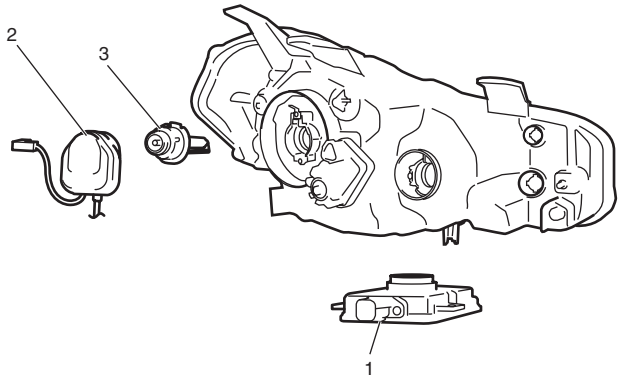

I6RW0C920001-01

Ballast

Ballast makes the voltage from the battery rise and converts the current from DC to AC. It also outputs high voltage to the igniter when the headlight is turned on and supplies to discharge headlight bulb with necessary voltage for continuous lighting while it is lit.

Igniter

Igniter generates high voltage needed to turn on the discharge headlight. It is charged with high voltage raised by the ballast and it applies voltage pulse as high as about 20,000 V to the tungsten electrode in the discharge headlight bulb. After the discharge headlights light up, the ballast supplies voltage to bulbs.

Discharge headlight bulb

Discharge headlight bulb is used for the low beam. It does not have a filament but xenon gas (1), mercury (3) and metal iodide (2) sealed in it. It lights up when its tungsten electrodes (4) apply high voltage to these contents.

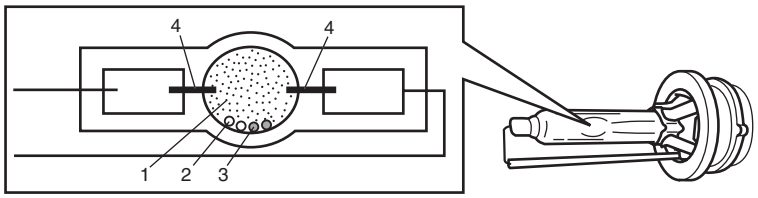

I5JB0A920001-01

Fail-safe function of discharge headlight

As the ballast has a fail-safe function which stops supply of the voltage to the igniter when it detects any of the following condition.

- Ignition switch is set to “HEAD” position while igniter is not connected to discharge headlight bulb
- Discharge headlight does not light up even when lighting switch is set to “HEAD” position.
- Ballast detects a short in the circuit between discharge headlight bulb and ballast when lighting switch is at “HEAD” position.

Headlight Auto Leveling System Description (If Equipped)

S7RW0A9201002

Headlight Auto Leveling System adjusts the optical axis of the headlight automatically to be suitable for the varied vehicle position while the headlights are lit. It consists of front height sensor (1), rear height sensor (2), headlight leveling control module (3), headlight leveling actuator (4) and headlight leveling warning light (5).

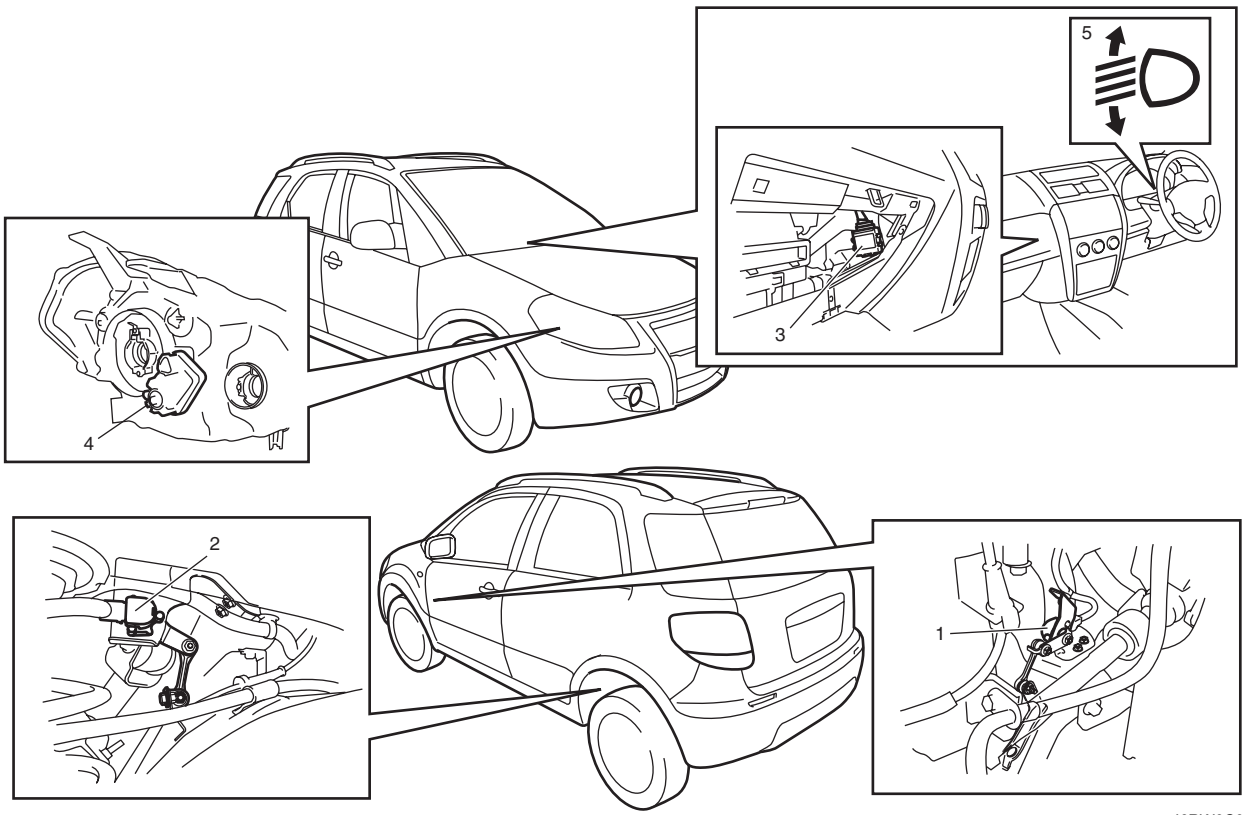

I6RW0C920002-01

With more passenger(s) or luggage in the vehicle, the vehicle position differs from that in such vehicle state with one person and no load in the vehicle and angle of the headlight optical axis varies accordingly. This system automatically adjusts the varied angle to maintain the optical axis properly.

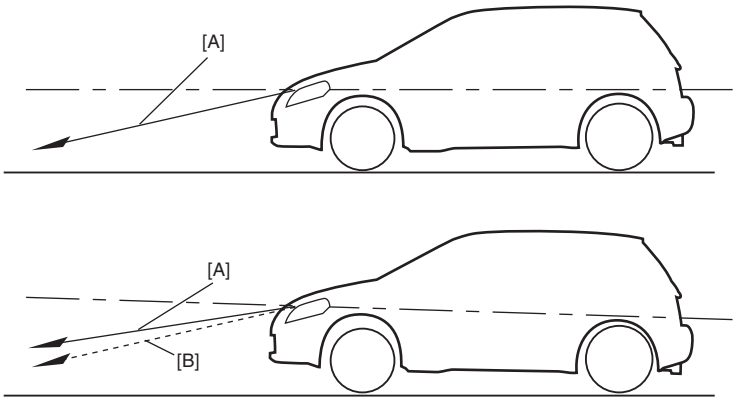

I6RW0C920003-01

[A]:	Optical axis of headlight in standard position
[B]:	Corrected optical axis of headlight

Front and rear height sensors

Front height sensor (1) is installed to the front suspension frame (2) respectively and connected to the lower arm (4) with the link (3). Also rear height sensor is installed to the rear floor center cross member (5) respectively and connected to the rear axle (6) with the link (3). Each height sensor converts vertical movement of the lower arm into the resistance value and outputs the detected change in the vehicle position as a voltage signal to the headlight leveling control module.

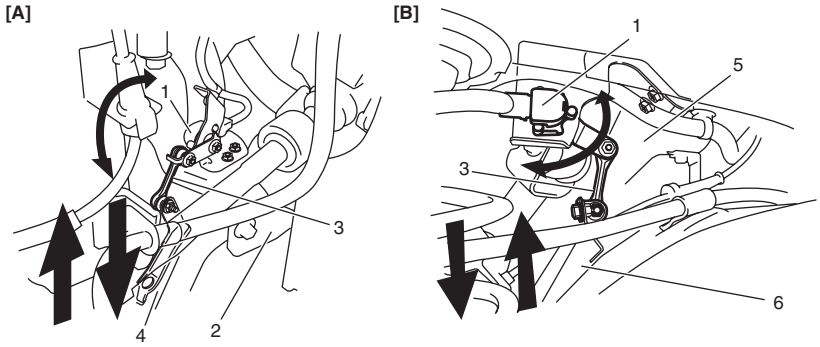

I6RW0C920004-01

[A]: Front	[B]: Rear

Headlight leveling control module

Headlight leveling control module is installed at the inside of the glove box. It uses the headlight ON signal from the lighting switch, vehicle speed signal from BCM and vehicle position signal from height sensors to calculate the angle of the headlight optical axis to be corrected. Then it adjusts the optical axis angle of headlight based on the calculated angle value by driving the headlight leveling actuator so that proper headlight aiming is obtained. Also, when any abnormality is detected in the system, the headlight leveling control module makes the headlight leveling warning light in the combination meter light up to warn the driver of an abnormality in the system.

Fail-safe function of headlight leveling control module

Headlight leveling control module has a fail-safe function which operates as follows.

Detecting condition	Fail-safe operation	Warning light
Power voltage supplied to headlight leveling control module is higher than 18.5 V	Stops headlight leveling actuator operation.	OFF
Power voltage supplied to headlight leveling control module is lower than 9 V	Stops headlight leveling actuator operation.	OFF
Vehicle speed is 180 km/h or higher	Stops headlight leveling actuator operation.	OFF

Detecting condition	Fail-safe operation	Warning light
Voltage supplied to height sensor is lower than 4.6 V	Stops headlight leveling actuator operation.	ON
Signal voltage from height sensor is higher than 4.75 V or lower than 0.25 V	Stops headlight leveling actuator operation.	ON
Abnormality in headlight leveling control module is detected	Resets microcomputer in headlight leveling control module.	ON
Correction value calculated by headlight leveling control module exceeds operation range of headlight leveling actuator	Drives headlight leveling actuator within its operation range.	OFF

Headlight leveling actuator

Headlight leveling actuator is (1) located in the headlight housing (2). It moves the reflector (3) in the headlight housing according to the drive signal from the headlight leveling control module so as to adjust the optical axis of the headlight to the angle calculated by the headlight leveling control module.

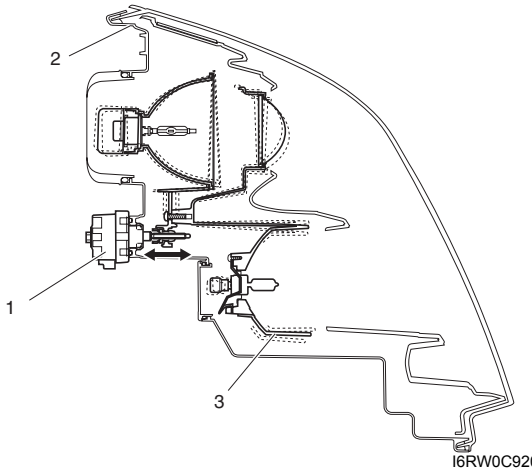

I6RW0C920005-01

Auto-On Headlight System Description (If Equipped)

S7RW0A9201003

The auto-on headlight is controlled by auto-on headlight controller (1) and works as follows. Under such conditions as the ignition switch turned ON and the lighting switch (2) turned to the “AUTO” position, when illuminance to the auto-on headlight sensor (3) becomes lower than the specified value, the headlights and clearance lights are turned ON by auto-on headlight controller. On the other hand, when illuminance to the auto-on headlight sensor becomes higher than the specified value under the same conditions, the headlights and clearance lights are turned OFF by auto-on headlight controller.

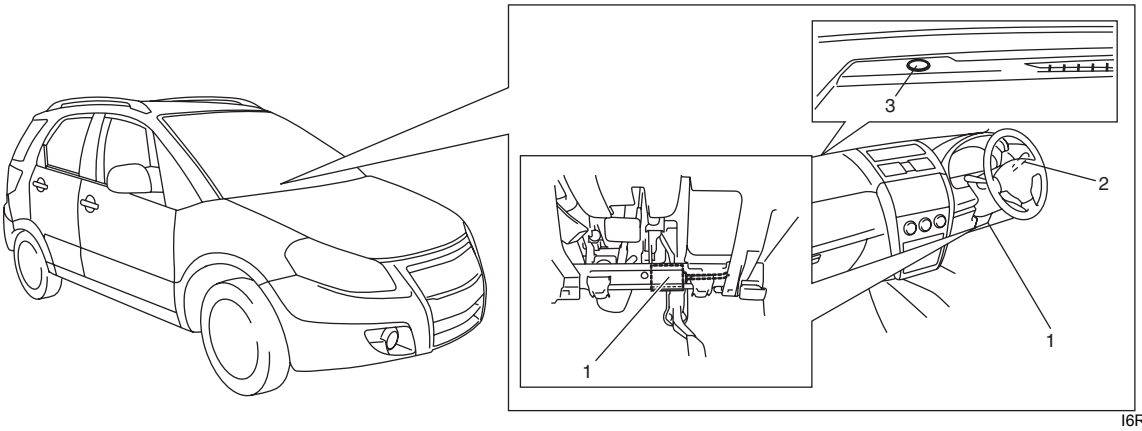

I6RW0C920006-01

Schematic and Routing Diagram

Headlight Auto Leveling System Wiring Circuit Diagram

S7RW0A9202001

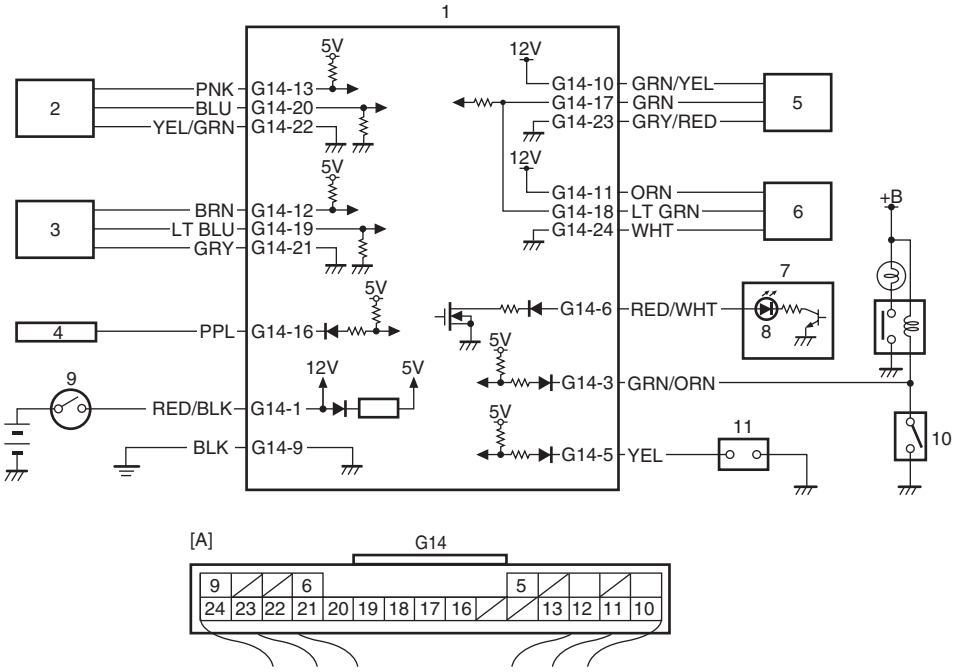

I6RW0C920007-01

[A]: Headlight leveling control module connector (viewed from harness side)	4. BCM	8. Headlight leveling warning light
1. Headlight leveling control module	5. Right headlight leveling actuator	9. Ignition switch
2. Front height sensor	6. Left headlight leveling actuator	10. Lighting switch
3. Rear height sensor	7. Combination meter	11. Diagnosis connector

Component Location

Lighting System Components Location

S7RW0A9203001

NOTE

Below figure shows left-hand steering vehicle. For right-hand steering vehicle, parts with (*) are installed at the opposite side.

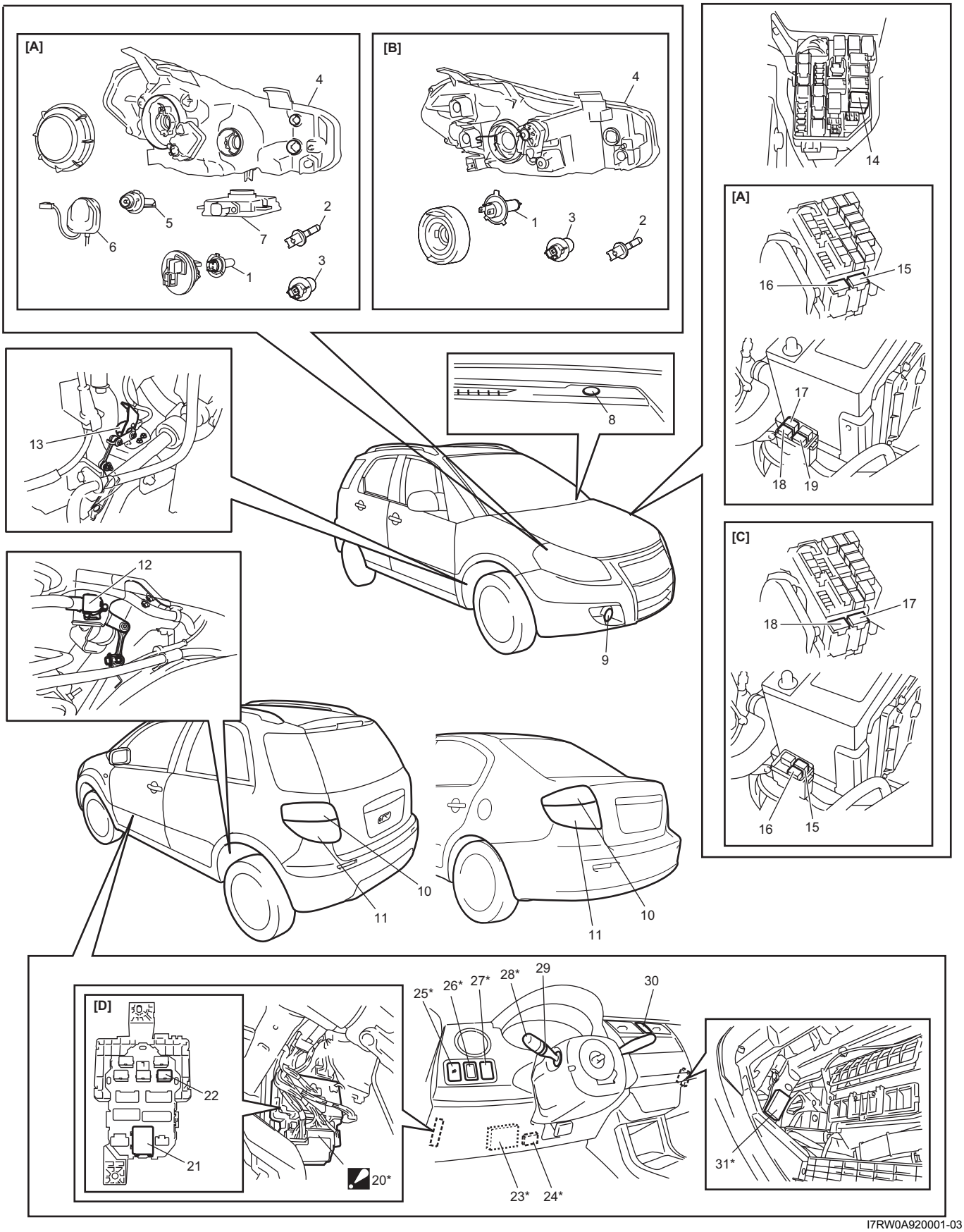

I7RW0A920001-03

[A]: Discharge headlight model	9. Front fog light (if equipped)	21. Turn signal / hazard warning relay
[B]: Other than discharge headlight model	10. Rear combination light	22. Tail light relay (junction block without BCM type)
[C]: Junction block without BCM type	11. Rear fog light (if equipped)	23. BCM (junction block without BCM type)
[D]: Junction block viewed from relay side	12. Rear height sensor (if equipped)	24. Auto-on headlight controller (if equipped)
1. Headlight bulb	13. Front height sensor (if equipped)	25. Front fog light switch (if equipped)
2. Clearance light	14. Front fog light relay (if equipped)	26. Headlight manual leveling switch (if equipped)
3. Turn signal light	15. Headlight high beam relay (left side)	27. Illumination cancel switch (if equipped)
4. Headlight unit	16. Headlight high beam relay (right side)	28. Lighting switch
5. Discharge headlight bulb	17. Headlight low beam relay (left side)	29. Rear fog light switch (if equipped)
6. Igniter	18. Headlight low beam relay (right side)	30. Hazard warning switch
7. Ballast	19. Tail light relay	31. DRL controller or headlight leveling control module (if equipped)
8. Auto-on headlight sensor (if equipped)	20. BCM (junction block with BCM type) : BCM cannot be removed from junction block.	

Interior Light System Location

S7RW0A9203002

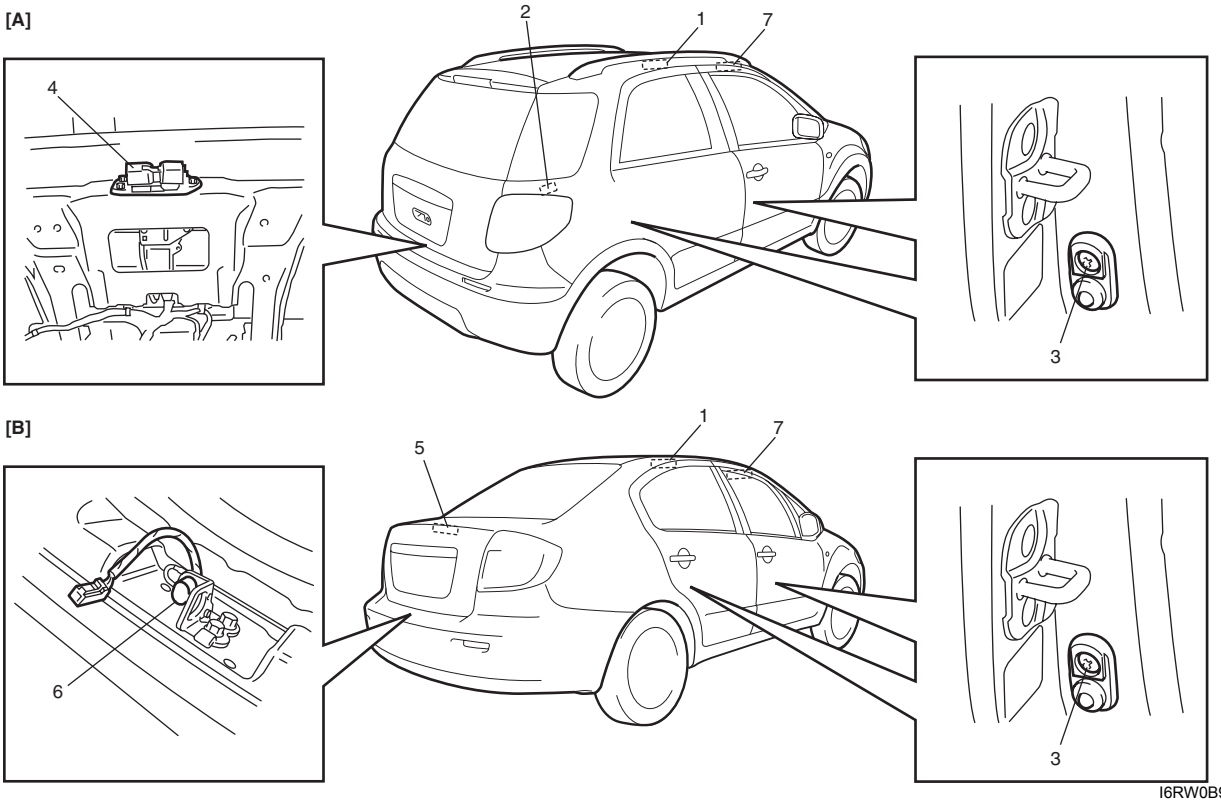

I6RW0B920002-01

1. Dome light	4. Rear end door switch (included in lock assembly)	7. Front spot light
2. Luggage compartment light (if equipped)	5. Trunk room light	[A]: Hatchback
3. Door switches (both sides)	6. Trunk lid switch	[B]: Sedan

Diagnostic Information and Procedures

Self-Diagnosis Function for Headlight Auto Leveling System

S7RW0A9204001

The headlight leveling control module has self-diagnosis function to monitor the system components and circuits while the headlight auto leveling system is at work. When the headlight leveling control module detects an abnormality in the system, the headlight leveling warning light in the combination meter turns ON. However, the headlight leveling control module does not have a function to indicate location of such abnormality.

Headlight Leveling Warning Light Check

S7RW0A9204002

1) Turn ignition switch to ON position.
2) Check that headlight leveling warning light (1) lights for about 2 seconds and then goes OFF. If the headlight leveling warning light lights up again 10 seconds after it turned off, go to “Headlight Auto Leveling System Symptom Diagnosis (If Equipped)”. If headlight leveling warning light flashes, go to “Initialization of Headlight Auto Leveling System”.

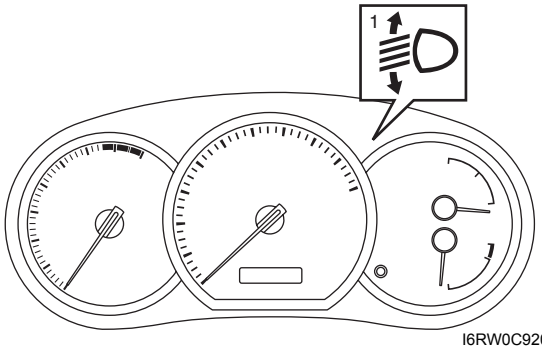

I6RW0C920009-01

Headlight Symptom Diagnosis (Discharge Headlight Model)

S7RW0A9204003

Condition	Possible cause	Correction / Reference Item
Only one low beam does not light up	Circuit fuse blown	*Replace fuse and check for short circuit.*
	Headlight low beam relay faulty	*Check headlight relay referring to “Tail Light Relay, Headlight Relay, Front Fog Light Relay Inspection (If Equipped)”.*
	Bulb faulty	*Replace bulb.*
	Igniter faulty	*Replace igniter.*
	Ballast faulty	*Replace ballast.*
	Wiring or ground faulty	*Repair circuit.*
Low beam does not light up	Circuit fuses blown	*Replace fuses and check for short circuit.*
	Headlight low beam relay faulty	*Check headlight relay referring to “Tail Light Relay, Headlight Relay, Front Fog Light Relay Inspection (If Equipped)”.*
	Lighting or dimmer switch faulty	*Check lighting and dimmer switch referring to “Headlight Switch (in Lighting Switch) Inspection”.*
	Bulbs faulty	*Replace bulbs.*
	Igniters faulty	*Replace igniters.*
	Ballasts faulty	*Replace ballasts.*
	Wiring or ground faulty	*Repair circuit.*
Only one high beam does not light up	Circuit fuse blown	*Replace fuse and check for short circuit.*
	Headlight high beam relay faulty	*Check headlight relay referring to “Tail Light Relay, Headlight Relay, Front Fog Light Relay Inspection (If Equipped)”.*
	Bulb blown	*Replace bulb.*
	Wiring or ground faulty	*Repair circuit.*
High beam does not light up	Circuit fuses blown	*Replace fuses and check for short circuit.*
	Headlight high beam relay faulty	*Check headlight relay referring to “Tail Light Relay, Headlight Relay, Front Fog Light Relay Inspection (If Equipped)”.*
	Lighting or dimmer switch faulty	*Check lighting and dimmer switch referring to “Headlight Switch (in Lighting Switch) Inspection”.*
	Bulbs blown	*Replace bulbs.*
	Wiring or ground faulty	*Repair circuit.*

Headlight Symptom diagnosis (Other than Discharge Headlight Model)

S7RW0A9204004

Condition	Possible cause	Correction / Reference Item
Only one low beam does not light up	Circuit fuse blown	*Replace fuse and check for short circuit.*
	Bulb blown	*Replace bulb.*
	Headlight low beam relay faulty (if equipped)	*Check headlight relay referring to "Tail Light Relay, Headlight Relay, Front Fog Light Relay Inspection (If Equipped)".*
	Wiring or ground faulty	*Repair circuit.*
Low beam does not light up	Circuit fuse blown	*Replace fuses and check for short circuit.*
	Headlight low beam relay faulty (if equipped)	*Check headlight relay referring to "Tail Light Relay, Headlight Relay, Front Fog Light Relay Inspection (If Equipped)".*
	Lighting or dimmer switch faulty	*Check lighting and dimmer switch referring to "Headlight Switch (in Lighting Switch) Inspection".*
	Bulbs blown	*Replace bulbs.*
	Wiring or ground faulty	*Repair circuit.*
	DRL controller faulty (if equipped)	*Check system referring to "Inspection of DRL Controller and Its Circuits (If Equipped)".*
Only one high beam does not light up	Circuit fuse blown	*Replace fuse and check for short circuit.*
	Bulb blown	*Replace bulb.*
	Headlight high beam relay faulty (if equipped)	*Check headlight relay referring to "Tail Light Relay, Headlight Relay, Front Fog Light Relay Inspection (If Equipped)".*
	Wiring or ground faulty	*Repair circuit.*
High beam does not light up	Circuit fuse blown	*Replace fuses and check for short circuit.*
	Headlight high beam relay faulty (if equipped)	*Check headlight relay referring to "Tail Light Relay, Headlight Relay, Front Fog Light Relay Inspection (If Equipped)".*
	Lighting or dimmer switch faulty	*Check lighting and dimmer switch referring to "Headlight Switch (in Lighting Switch) Inspection".*
	Bulbs blown	*Replace bulbs.*
	Wiring or ground faulty	*Repair circuit.*

Auto-On Headlight System Symptom Diagnosis (If Equipped)

S7RW0A9204005

Condition	Possible cause	Correction / Reference Item
Headlights are not turned ON or OFF automatically even after darkened or lightened	Circuit fuse blown	*Replace fuse and check for short circuit.*
	Lighting or dimmer switch faulty	*Check lighting and dimmer switch referring to "Headlight Switch (in Lighting Switch) Inspection".*
	Auto-on headlight sensor faulty	*Check auto-on headlight sensor referring to "Auto-On Headlight Sensor Inspection (If Equipped)".*
	Wiring or ground faulty	*Repair circuit.*
	Auto-on headlight controller faulty	*Check auto-on headlight controller for function referring to "Inspection of Auto-On Headlight Controller and Its Circuit (If Equipped)".*

DRL System Symptom Diagnosis (If Equipped)

S7RW0A9204006

Condition	Possible cause	Correction / Reference Item
Headlight does not light when lighting switch is in OFF position and engine is running	Lighting switch faulty	*Check lighting switch referring to "Headlight Switch (in Lighting Switch) Inspection".*
	Oil pressure switch faulty	*Check oil pressure switch referring to "Oil Pressure Switch Inspection in Section 9C".*
	DRL controller faulty	*Check lighting switch referring to "Inspection of DRL Controller and Its Circuits (If Equipped)".*
	Wiring or grounding faulty	*Repair circuit.*
Headlight lights even if engine stop and lighting switch is OFF position	Lighting switch faulty	*Check system referring to "Headlight Switch (in Lighting Switch) Inspection".*
	Oil pressure switch faulty	*Check oil pressure switch referring to "Oil Pressure Switch Inspection in Section 9C".*
	DRL controller faulty	*Check system referring to "Inspection of DRL Controller and Its Circuits (If Equipped)".*
	Wiring or grounding faulty	*Repair circuit.*

Headlight Auto Leveling System Symptom Diagnosis (If Equipped)

S7RW0A9204007

Condition	Possible cause	Correction / Reference Item
Headlight leveling warning light comes on steady	Height sensor faulty	*Check height sensor referring to "Height Sensor and Its Circuit Inspection (If Equipped)".*
	Wiring or ground faulty	*Repair circuit.*
	Headlight leveling control module faulty	*Check headlight leveling control module for function referring to "Inspection of Headlight Leveling Control Module and Its Circuit (Headlight Auto Leveling System)".*
Optical axes of both headlights do not change	Circuit fuse blown	*Replace fuse and check for short circuit.*
	Supply voltage too low or too high	*Check charging system referring to "Generator Test (Undercharged Battery Check) in Section 1J" or "Generator Test (Overcharged Battery Check) in Section 1J".*
	Wiring or ground faulty	*Repair circuit.*
	Headlight leveling control module faulty	*Check headlight leveling control module for function referring to "Inspection of Headlight Leveling Control Module and Its Circuit (Headlight Auto Leveling System)".*
Optical axis of only one headlight does not change	Headlight levering actuator faulty	*Check actuator referring to "Headlight Leveling Actuator Inspection (If Equipped)".*
	Headlight housing deformed	*Replace headlight housing.*
	Wiring or ground faulty	*Repair circuit.*

Headlight Manual Leveling System Symptom Diagnosis (If Equipped)

S7RW0A9204008

Condition	Possible cause	Correction / Reference Item
Optical axes of both headlights do not change	Circuit fuse blown	*Replace fuse and check for short circuit.*
	Headlight leveling switch faulty	*Check headlight leveling switch referring to "Headlight Manual Levering Switch Inspection (If Equipped)".*
	Supply voltage too low	*Check charging system referring to "Generator Test (Undercharged Battery Check) in Section 1J".*
	Wiring or grounding faulty	*Repair circuit.*
Optical axis of only one headlight does not change	Circuit fuse blown	*Replace fuse and check for short circuit.*
	Headlight leveling actuator faulty	*Check actuator referring to "Headlight Leveling Actuator Inspection (If Equipped)".*
	Headlight housing deformed	*Replace headlight housing.*
	Wiring or grounding faulty	*Repair circuit.*

Turn Signal and Hazard Warning Light Symptom Diagnosis

S7RW0A9204009

Condition	Possible cause	Correction / Reference Item
Flash rate high or one side only flashes	Bulb blown on “flash rate high”-side	*Replace bulb.*
	Incorrect bulb	*Replace bulb.*
	Turn signal / hazard warning relay faulty	*Check turn signal / hazard warning relay referring to “Turn Signal and Hazard Warning Relay Inspection”.*
	Open circuit or high resistance existing either; between turn signal switch and non lighting bulb, or between hazard warning switch and non lighting bulb	*Repair circuit.*
	Wiring or grounding faulty	*Repair circuit.*
No flashing ***NOTE*** • ***Use of SUZUKI scan tool makes it easy to check whether a faulty condition is on the input side or output side of BCM. For checking procedure, refer to “Diagnosis Using Output Test Function of SUZUKI Scan Tool” under “Scan Tool Data in Section 10B”.*** • ***Check each part in the order from the top of the following list.***	Circuit fuse(s) blown	*Replace fuse(s) and check for short circuit.*
	Turn signal / hazard warning relay faulty	*Check turn signal / hazard warning relay referring to “Turn Signal and Hazard Warning Relay Inspection”.*
	Turn signal light switch faulty	*Check turn signal light switch referring to “Turn Signal Light Switch (in Lighting Switch) Inspection”.*
	Hazard warning switch faulty	*Check hazard warning switch referring to “Hazard Warning Switch Inspection”.*
	Open circuit or high resistance existing between battery and switch	*Repair circuit.*
	Wiring or grounding faulty	*Repair circuit.*
	BCM faulty	*Replace after making sure that none of above parts is faulty.*
Flash rate low	Supply voltage low	*Check charging system referring to “Generator Test (Undercharged Battery Check) in Section 1J”.*
	Turn signal / hazard warning relay faulty	*Check turn signal / hazard warning relay referring to “Turn Signal and Hazard Warning Relay Inspection”.*

Clearance, Tail and License Plate Light Symptom Diagnosis

S7RW0A9204010

Condition	Possible cause	Correction / Reference Item
All lights do not light up	Circuit fuse blown	*Replace fuse and check for short circuit.*
	Tail light relay faulty (if equipped)	*Check tail light relay referring to “Tail Light Relay, Headlight Relay, Front Fog Light Relay Inspection (If Equipped)”.*
	Lighting and dimmer switch faulty	*Check lighting and dimmer switch referring to “Headlight Switch (in Lighting Switch) Inspection”.*
	Wiring or grounding faulty	*Repair circuit.*
Some lights do not light up	Bulb(s) blown	*Replace bulb(s).*
	Wiring or grounding faulty	*Repair circuit.*

Back-Up Light Symptom Diagnosis

S7RW0A9204011

Condition	Possible cause	Correction / Reference Item
Back-up lights do not light up	Bulb(s) blown	*Replace bulb(s).*
	Circuit fuse blown	*Replace fuse and check for short circuit.*
	Back-up light switch (M/T model) or transmission range sensor (A/T model) faulty	*Check back-up light switch or transmission range sensor referring to "Back Up Light Switch Inspection in Section 5B" or "Transmission Range Sensor Inspection and Adjustment in Section 5A".*
	Wiring or grounding faulty	*Repair circuit.*
Back-up lights stay on	Back-up light switch (M/T model) or transmission range sensor (A/T model) faulty	*Check back-up light switch or transmission range sensor referring to "Back Up Light Switch Inspection in Section 5B" or "Transmission Range Sensor Inspection and Adjustment in Section 5A".*

Brake Light Symptom Diagnosis

S7RW0A9204012

Condition	Possible cause	Correction / Reference Item
Brake light do not light up	Bulb(s) blown	*Replace bulb(s).*
	Circuit fuse blown	*Replace fuse and check for short circuit.*
	Brake light switch faulty	*Check brake light switch referring to "Brake Light Switch Inspection".*
	Wiring or grounding faulty	*Repair circuit.*
Brake light stay on	Brake light switch faulty	*Check or adjust brake light switch referring to "Brake Light Switch Inspection" or "Brake Light Switch Adjustment in Section 4A".*

Front Fog Light Symptom Diagnosis (If Equipped)

S7RW0A9204013

Condition	Possible cause	Correction / Reference Item
Only one light does not light	Bulb blown	*Replace bulb.*
	Wiring or grounding faulty	*Repair circuit.*
Front fog lights do not light	Circuit fuse blown	*Replace fuse and check for short circuit.*
	Bulb blown	*Replace bulb.*
	Front fog light switch faulty	*Check front fog light switch referring to "Front Fog Light Switch Inspection (If Equipped)".*
	Front fog light relay faulty	*Check front fog light relay referring to "Tail Light Relay, Headlight Relay, Front Fog Light Relay Inspection (If Equipped)".*
	Wiring or grounding faulty	*Repair circuit.*

Rear Fog Light Symptom Diagnosis (If Equipped)

S7RW0A9204014

Condition	Possible cause	Correction / Reference Item
Rear fog light do not light	Circuit fuse blown	*Replace fuse and check for short circuit.*
	Bulb blown	*Replace bulb.*
	Rear fog light switch faulty	*Check rear fog light switch referring to "Rear Fog Light Switch Inspection (If Equipped)".*
	Wiring or grounding faulty	*Repair circuit.*

Illumination Cancel System Symptom Diagnosis (If Equipped)

S7RW0A9204015

Condition	Possible cause	Correction / Reference Item
Illumination cancel do not normal operation	Circuit fuse blown	*Replace fuse and check for short circuit.*
	Illumination cancel switch faulty	*Check illumination cancel switch referring to "Illumination Cancel Switch Inspection (If Equipped)".*
	Combination meter and/or information display faulty	*Replace combination meter and/or information display.*
	Wiring or grounding faulty	*Repair circuit.*

Interior Light Symptom Diagnosis

S7RW0A9204016

NOTE

- **Use of SUZUKI scan tool makes it easy to check whether a faulty condition is on the input side or output side of BCM. For checking procedure, refer to "Diagnosis Using Output Test Function of SUZUKI Scan Tool" under "Scan Tool Data in Section 10B".**
- **Check each part in the order from the top of the following list.**

Condition	Possible cause	Correction / Reference Item
Dome light does not light up	Bulb blown	*Replace bulb.*
	Circuit fuse blown	*Replace fuse and check for short circuit.*
	Dome light switch faulty	*Check dome light switch.*
	Door switch faulty	*Check door switch referring to "Door Switch (Front / Rear Door) Inspection in Section 9C".*
	Wiring or grounding faulty	*Repair circuit.*
	BCM faulty	*Replace after making sure that none of above parts is faulty.*
Luggage compartment light does not light up (if equipped)	Bulb blown	*Replace bulb.*
	Rear end door / trunk lid switch faulty	*Check switch referring to "Rear End Door Switch Inspection (Hatchback) in Section 9C" or "Trunk Lid Switch Inspection (Sedan) in Section 9C".*
	Wiring or grounding faulty	*Repair circuit.*
Front spot lights do not light up	Bulb(s) blown	*Replace bulb(s).*
	Spot light switch faulty	*Check spot light switch.*
	Wiring or grounding faulty	*Repair circuit.*

DRL Operation Inspection (If Equipped)

S7RW0A9204017

1) Confirm that lighting switch is in OFF position.
2) Confirm that dimmer and passing switch is in low beam position.
3) Check DRL for operation as follows.
   a) Turn ignition switch to ON position and check headlights remain OFF.
   b) Start engine and run it at idle speed. Check headlights turn ON at low beam.
   c) Switch dimmer and passing switch to high beam position and check headlights remain turning ON at low beam.
4) If check result is not as satisfied, go to "Inspection of DRL Controller and Its Circuits (If Equipped)".

Inspection of DRL Controller and Its Circuits (If Equipped)

S7RW0A9204018

1) Confirm that lighting switch is in good condition referring to “Headlight Switch (in Lighting Switch) Inspection”.
2) Confirm that oil pressure switch is in good condition referring to “Oil Pressure Switch Inspection in Section 9C”.
3) Remove glove box.
4) Remove DRL controller (1) from steering support member.
5) Connect connector to DRL controller.
6) Check that the voltage between the following terminals and vehicle body ground are specifications under each condition.
7) Check that voltage between the following terminals and body ground are as specification under each condition.
   If measuring voltage is not within specification, check applicable circuit for open or short. If circuits are normal, replace DRL controller.
   If measuring voltage is within specification, DRL controller and its circuits are good condition.

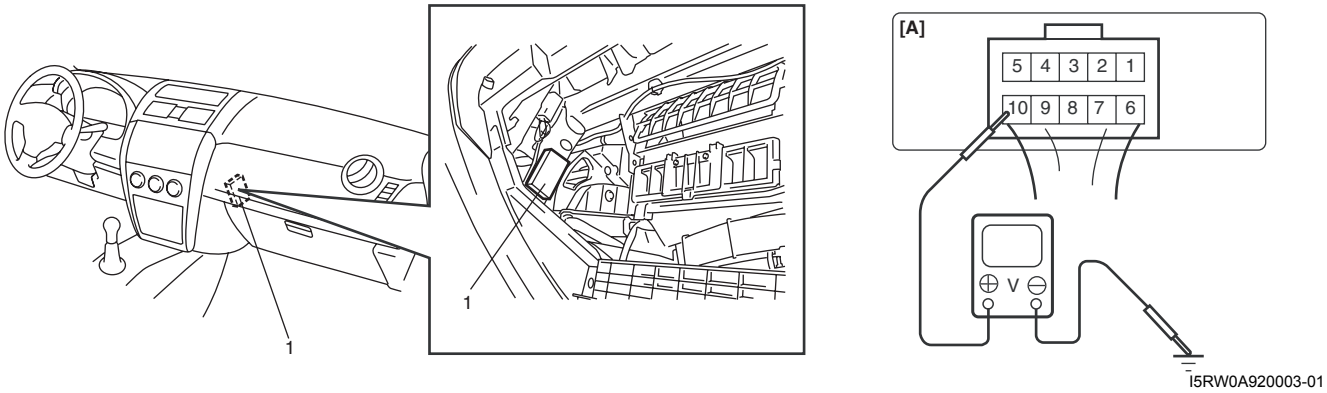

[A]: DRL controller connector viewed from harness side

Terminal	Circuit	Specification	Condition
1	To clearance lamp	0 – 1 V	Engine is at stop and lighting switch is at OFF position.
		10 – 14 V	Engine is at running and lighting switch is at OFF position.
2	To ignition switch	0 – 1 V	Ignition switch is at OFF position.
		10 – 14 V	Ignition switch is at ON position.
3	To lighting switch (CLEARANCE)	0 – 1 V	Lighting switch is at OFF position.
		10 – 14 V	Lighting switch is at CLEARANCE position or HEAD position.
4	Ground	0 – 1 V	—
5	Ground	0 – 1 V	—
6	To head lamp	0 – 1 V	• Lighting switch is at HEAD position and dimmer switch is at LOW position. • Engine is running and lighting switch is at OFF position.
		10 – 14 V	Lighting switch is at HEAD position and dimmer switch is at HI position.
7	To oil pressure switch	8 – 10 V	Engine is at running (Oil pressure warning lamp is turned OFF).
		0 – 1 V	Engine is at stop.
8	Main fuse	10 – 14 V	—
9	To lighting switch (HEAD)	6 – 8 V	• Engine is at running and lighting switch is at OFF position. • Engine is running and lighting switch is CLEARANCE position.
		0 – 1 V	• Engine is at running and dimmer switch is at HEAD position. • Engine is at stop.

Terminal	Circuit	Specification	Condition
10	To lighting switch (LOW)	0 – 1 V	• Engine is at running and lighting switch is at OFF position. • Lighting switch is at HEAD position and dimmer switch is at LOW position.
		10 – 14 V	Lighting switch is at HEAD position and dimmer switch is at HI position.

Auto-On Headlight Operation Inspection (If Equipped)

S7RW0A9204019

1) Turn ignition switch to ON position and then turn lighting switch to “AUTO” position.
2) Check headlights for operation as follows. If headlights do not turn ON or OFF, go to “Inspection of Auto-On Headlight Controller and Its Circuit (If Equipped)”.
   a) Cover auto-on headlight sensor by hand and check that headlights light up then.
   b) Light over auto-on headlight sensor vertically with on incandescent lamp of approx, 100 W apart from about 100 mm (3.94 in.) (1) and check that headlights go off then.

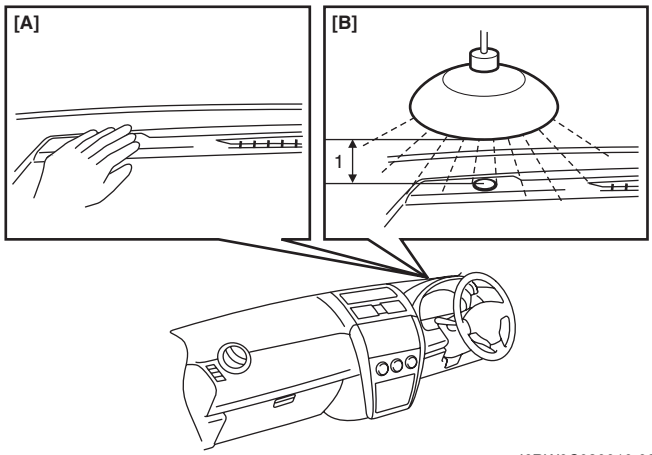

I6RW0C920010-02

[A]: Fig. for Step a)	[B]: Fig. for Step b)

Inspection of Auto-On Headlight Controller and Its Circuit (If Equipped)

S7RW0A9204020

1) Confirm that lighting switch is in good condition referring to “Headlight Switch (in Lighting Switch) Inspection”.
2) Remove steering column hole cover.
3) Remove auto-on headlight controller (1) from steering support member.
4) Connect connector to auto-on headlight control module.
5) Check that the voltage between the following terminals and vehicle body ground are specifications under each condition.
   If measuring voltage is not within specification, check applicable circuit for open or short. If circuits are normal, replace auto-on headlight controller.
   If measuring voltage is within specification, auto-on headlight controller and its circuits are good condition.

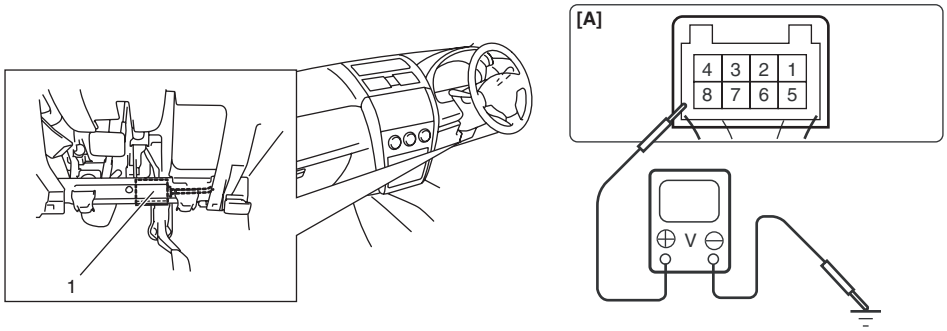

I6RW0C920011-01

[A]: Auto-on headlight controller connector viewed from harness side

Terminal	Circuit	Specification	Condition
1	Tail light control signal	0 V	Lighting switch at “AUTO” position, tail / position light at ON.
		10 – 14 V	Ignition switch is at ON position, lighting switch at “OFF” position.

Terminal	Circuit	Specification	Condition
2	Headlight control signal	0 V	Lighting switch at “AUTO” position, headlight at ON.
		10 – 14 V	Ignition switch is at ON position, lighting switch at “OFF” position.
3	Power supply for auto-on headlight sensor	About 5 V	Ignition switch is at OFF position.
4	Auto-on headlight sensor signal	3 – 4.5 V	Light the sensor lens with incandescent lamp 100 W
		Less than 1 V	Cover the sensor lens with hand.
5	Ground for auto-on headlight controller	0 V	—
6	Ground for auto-on headlight sensor	0 V	—
7	Lighting switch signal	0 V	Ignition switch is at ON position, lighting switch at “AUTO” position.
		1.0 – 5.0 V	Ignition switch is at ON position, lighting switch at other than “AUTO” position.
8	Ignition switch signal	10 – 14 V	Ignition switch is at ON position.

Inspection of Headlight Leveling Control Module and Its Circuit (Headlight Auto Leveling System)

S7RW0A9204021

Headlight auto leveling control module and its circuits can be checked at headlight auto leveling control module wiring couplers by measuring voltage and pulse signal.

⚠ CAUTION

Headlight auto leveling control module cannot be checked by itself. It is strictly prohibited to connect voltmeter or ohmmeter to headlight auto leveling control module with couplers disconnected from it.

Voltage Check

Check voltage between each terminal of headlight auto leveling control module and vehicle body ground under each condition. If measured voltage is out of standard value, check circuit (including switch and sensor) of terminal where voltage was measured.

NOTE

- **As each terminal voltage is affected by the battery voltage, confirm that it is 11 V or more when ignition switch is ON.**
- **Voltage with asterisk (*) cannot be measured by voltmeter because it is pulse signal. Check it with oscilloscope if necessary.**

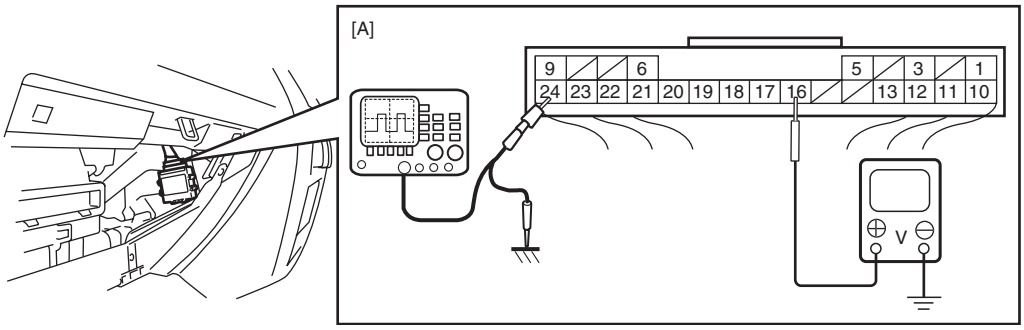

I6RW0C920012-01

[A]: Headlight leveling control module connector (viewed from harness side)

Terminal	Circuit	Specification	Condition
1	Power source	10 – 14 V	Ignition switch is at ON position.
2	—	—	—
3	Lighting switch	Less than 1.5 V	Lighting switch is at “HEAD” position.
		10 – 14 V	Lighting switch is at OFF position.
4	—	—	—
5	Diagnosis switch terminal	About 5 V	Ignition switch is at ON position.
6	Headlight auto leveling indicator	Less than 1.5 V	For about 3 seconds after ignition switch is turned on (i.e., headlight auto leveling indicator is lit up).
		10 – 14 V	More than about 3 seconds after ignition switch is turned on (i.e., headlight auto leveling indicator is not lit up).
7	—	—	—
8	—	—	—
9	Ground for headlight auto leveling control unit	0 V	Ignition switch is at ON position.
10	Power supply for right headlight leveling actuator	10 – 14 V	Ignition switch is at ON position.
11	Power supply for left headlight leveling actuator	10 – 14 V	Ignition switch is at ON position.
12	Power supply for rear height sensor	About 5 V	Ignition switch is at ON position.
13	Power supply for front height sensor	About 5 V	Ignition switch is at ON position.
14	—	—	—
15	—	—	—
16	Vehicle speed signal	Refer to “Reference waveform No.1: ”.	
17	Signal for right headlight leveling actuator	Less than 1 V	Lighting switch is at OFF position.
		1.0 – 12.6 V	For 17 seconds after turning lighting switch to ON position.
18	Signal for left headlight leveling actuator	Less than 1 V	Lighting switch is at OFF position.
		1.0 – 12.6 V	For 17 seconds after turning lighting switch to ON position.
19	Input signal for rear height sensor	About 2.5 V	Ignition switch is at ON position.
20	Input signal for front height sensor	About 2.5 V	Ignition switch is at ON position.
21	Ground for rear height sensor	0 V	Ignition switch is at ON position.
22	Ground for front height sensor	0 V	Ignition switch is at ON position.
23	Ground for right headlight leveling actuator	0 V	Ignition switch is at ON position.
24	Ground for left headlight leveling actuator	0 V	Ignition switch is at ON position.

Reference waveform No.1
Vehicle speed signal (1).
Vehicle speed signal is pulse. Pulse frequency varies depending on vehicle speed.

Measurement terminal	CH 1: “G14-16” to “G14-9”
Oscilloscope setting	CH 1: 2 V TIME: 20 ms/DIV
Measurement condition	Engine is running and vehicle speed 40 km/h (24 mph)

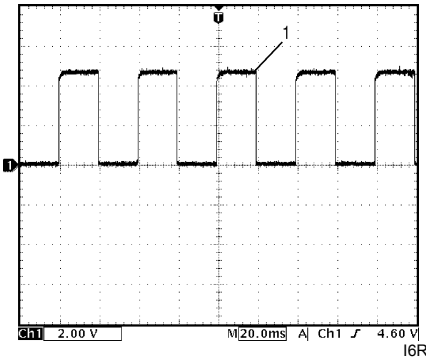

I6RW0C920013-02

Repair Instructions

Headlight Housing Removal and Installation

S7RW0A9206001

⚠ WARNING

- **To avoid danger of being burned, don’t touch when the bulb is hot.**
- **Don’t touch glass surface of bulb, to avoid deteriorate as the case may be unclear when bulb light on at dirty condition.**
- **Be sure to read “Precautions for Discharge Headlight Service (If Equipped)” before starting to service work.**

Removal

1) Disconnect negative (–) cable at battery.
2) Remove front bumper. Refer to “Front Bumper and Rear Bumper Components in Section 9K”.
3) Remove headlight mounting bolts.
4) Detach headlight housing (1) from vehicle.
5) Disconnect couplers (2) from headlight housing (1).

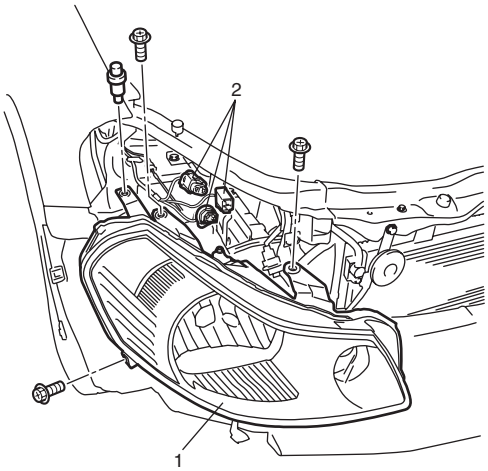

I5RW0A920004-01

Installation

Reverse removal procedure noting the following.

- Install headlight mounting bolts and clip (1), and then tighten headlight mounting bolts (“1” – “2”) according to numerical order as shown in figure.

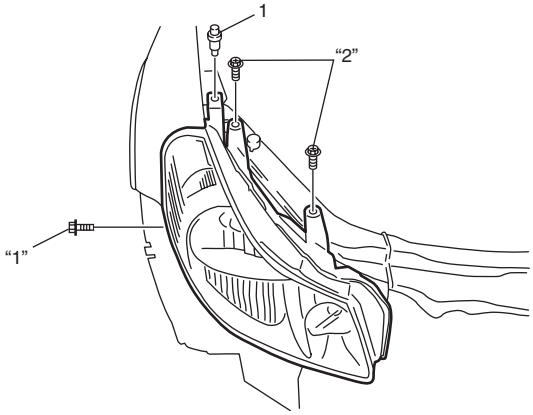

I5RW0A920005-01

- After installation, be sure to inspect and adjust aiming referring to “Headlight Aiming Adjustment with Screen”.

Headlight Bulb Replacement (Discharge Headlight Model)

S7RW0A9206002

⚠ WARNING

- **To avoid danger of being burned, don't touch when the bulb is hot.**
- **Don't touch glass surface of bulb, to avoid deteriorate as the case may be unclear when bulb light on at dirty condition.**
- **Be sure to read "Precautions for Discharge Headlight Service (If Equipped)" before starting to service work.**

1) Check to ensure that lighting switch is at OFF position.
2) Disconnect negative (–) cable at battery.
3) Remove headlight housing referring to "Headlight Housing Removal and Installation".
4) Remove cover (1) from headlight housing by turning it counterclockwise.
5) Remove igniter (2) from discharge headlight bulb by turning it counterclockwise.

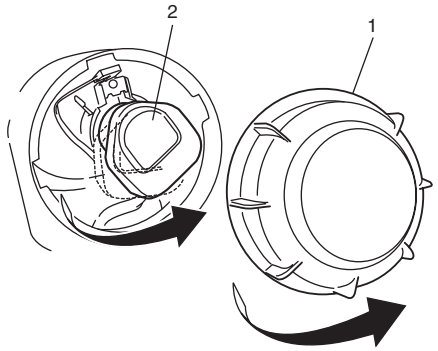

I6RW0C920014-02

6) Replace bulb (1) from headlight housing.

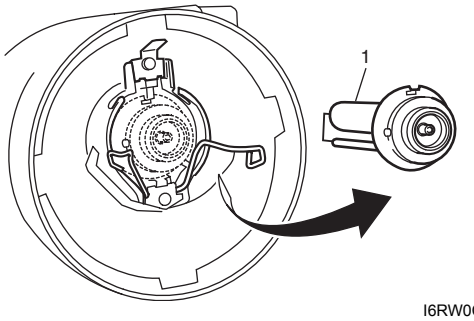

I6RW0C920015-02

7) Install igniter to discharge headlight bulb by turning it clockwise.
8) Install cover to headlight housing by turning it clockwise.
9) Install headlight housing to vehicle body referring to "Headlight Housing Removal and Installation".
10) Connect negative (–) cable at battery.
11) After installation, be sure to inspect and adjust aiming referring to "Headlight Aiming Adjustment with Screen".

Ballast Removal and Installation (Discharge Headlight Model)

S7RW0A9206003

⚠ WARNING

Be sure to read "Precautions for Discharge Headlight Service (If Equipped)" carefully before working. Neglecting them may result in personal injury.

Removal

1) Check to ensure that lighting switch is at OFF position.
2) Disconnect negative (–) cable at battery.
3) Remove headlight housing referring to "Headlight Housing Removal and Installation".
4) Remove ballast (1) from headlight housing (2).
5) Disconnect connector (3) from ballast.

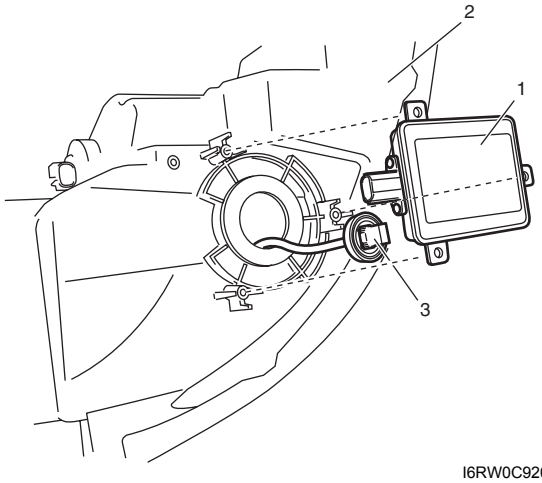

I6RW0C920016-02

Installation

Reverse removal procedure noting the following.

- Connect connectors securely.
- After installation, be sure to inspect and adjust aiming referring to "Headlight Aiming Adjustment with Screen".

Igniter Removal and Installation (Discharge Headlight Model)

S7RW0A9206004

⚠ WARNING

Be sure to read "Precautions for Discharge Headlight Service (If Equipped)" carefully before working. Neglecting them may result in personal injury.

Removal

1) Remove ballast referring to "Ballast Removal and Installation (Discharge Headlight Model)".
2) Remove cover (1) from headlight housing by turning it counterclockwise.
3) Remove igniter (2) from discharge headlight bulb by turning it counterclockwise.
4) After disconnecting ground wire (3), pull out igniter (2) from headlight housing.

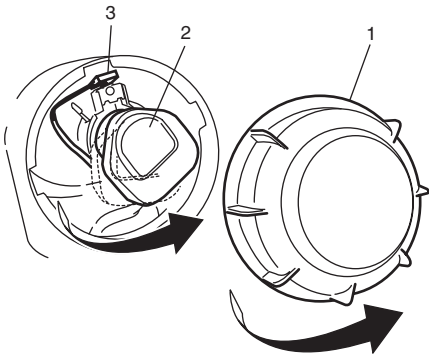

I6RW0C920017-01

Installation

Reverse removal procedure noting the following.

- Connect connectors securely.
- After installation, be sure to inspect and adjust aiming referring to "Headlight Aiming Adjustment with Screen".

Headlight Aiming Adjustment with Screen

S7RW0A9206005

NOTE

- **Unless otherwise obligated by local regulations, adjust headlight aiming according to the following procedure.**
- **After replacing headlight housing, be sure to adjust aiming.**
- **When inspecting and adjusting headlight with leveling system, make sure to set the leveling switch to "0" position with ignition switch turned ON.**

1) Make sure the following items.
   - Place vehicle on a flat surface in front of blank wall (screen) (1) ahead of headlight surface.

   Distance "a"
   10 m (32.8 ft.)

   - Adjust air pressure of all tires to the specified value respectively.
   - Bounce vehicle body up and down by hand to stabilize suspension.
   - Carry out aiming with a driver aboard.

   Driver's weight
   75 kg (165 lb)

2) Check to see if hot spot (high intensity zone) of each low beam axis falls as shown in figure.

   NOTE

   If the headlights interfere each other and make it hard to see the cut line clearly, cover the headlight on one side. This helps to make aiming adjustment easier.

   Hot spot specification
   Angle "b": 0.75° (Specification)
   Calculated distance "H": Approx. 130 mm (5.15 in.)

3) Align headlight aiming to specification by adjusting aiming gear if it is not set properly.

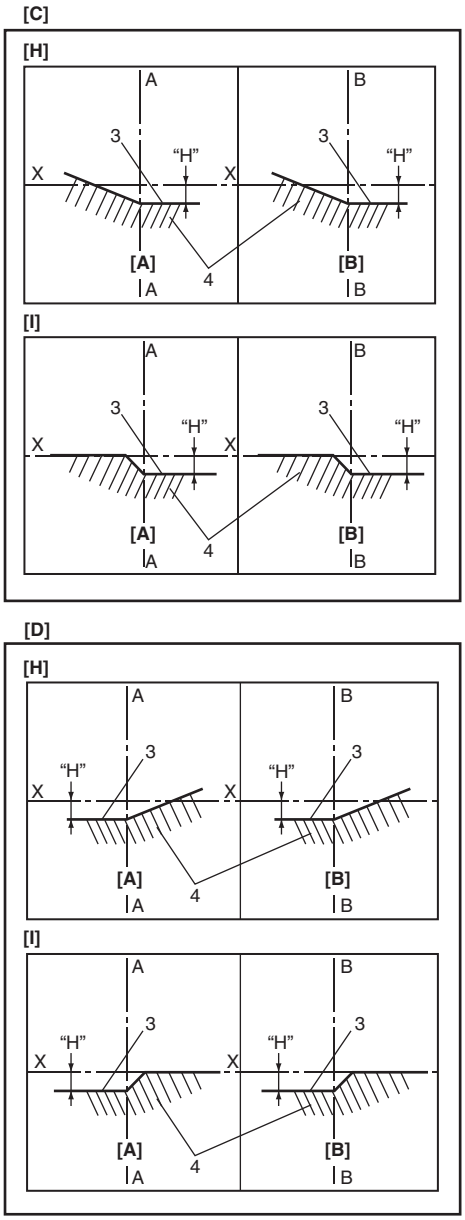

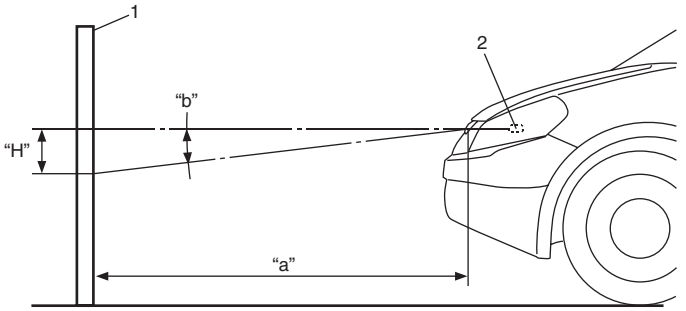

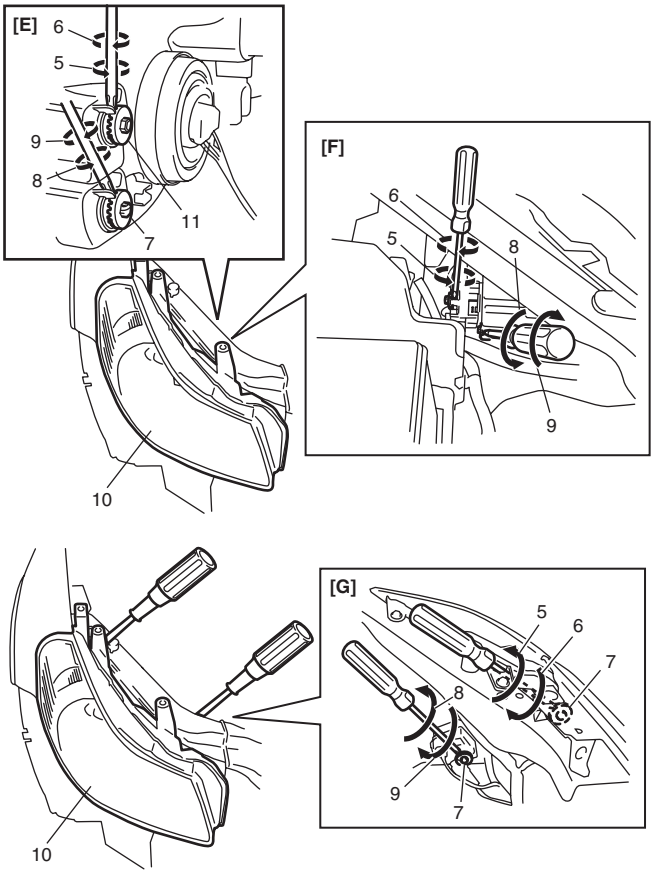

I6RW0C920018-02

2. Headlight bulb	10. Headlight housing	[D]: LH steering vehicle shown
3. Cut line (bounding line)	11. Headlight leveling actuator	[E]: Without headlight leveling actuator
4. Hot spot	X-X: Horizontal center line of headlight bulbs	[F]: Headlight manual leveling model
5. Turning (for up adjustment)	A-A: Vertical center line of left headlight bulb	[G]: Headlight auto leveling model
6. Turning (for down adjustment)	B-B: Vertical center line of right headlight bulb	[H]: Other than discharge headlight model
7. Aiming gear (for right / left adjustment)	[A]: Left headlight	[I]: Discharge headlight model
8. Turning (for right adjustment)	[B]: Right headlight	
9. Turning (for left adjustment)	[C]: RH steering vehicle shown	

Headlight Switch (in Lighting Switch) Removal and Installation

S7RW0A9206006

Removal

1) Disconnect negative (–) cable at battery.
2) Remove steering column hole cover (3).
3) Remove steering column covers (1).
   Turn steering wheel to access steering column cover screws (2).

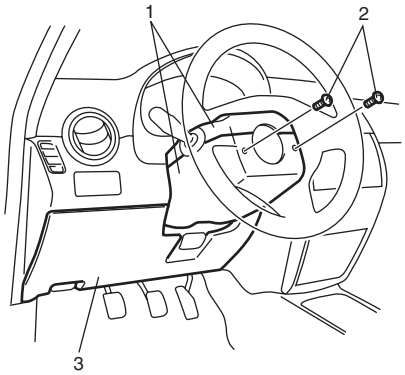

I5RW0A920007-02

4) Remove lighting switch (1) from combination switch assembly (2) and disconnect its coupler (3).

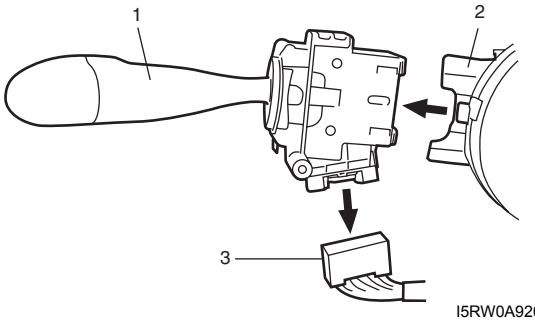

I5RW0A920008-01

Installation

Reverse removal procedure for installation.

Headlight Switch (in Lighting Switch) Inspection

S7RW0A9206007

Check for continuity between terminals at each switch position. If check result is not as specified, replace switch.

Without rear fog light switch and auto-on headlight switch

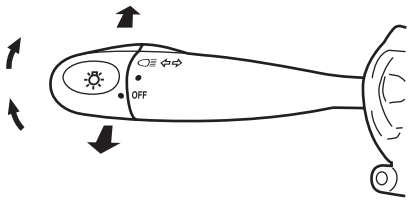

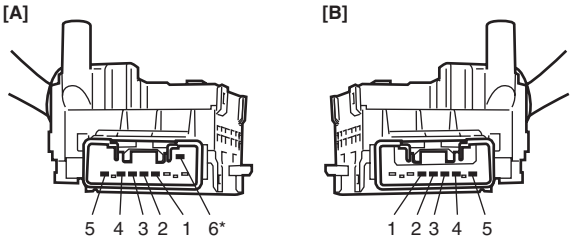

[D] \ [C]		5	3	1	2	4	6*
OFF	LOW			○			○
	PASS				○	○	○
	HI				○		○
•	LOW	○	○	○			○
	PASS	○	○		○	○	○
	HI	○	○		○		○
≡D	LOW	○	○	○		○	○
	PASS	○	○		○	○	○
	HI	○	○		○	○	○

I6JB0B920003-02

[A]: LHD	[D]: Shaft condition
[B]: RHD	*: If equipped
[C]: Terminal	

With rear fog light switch

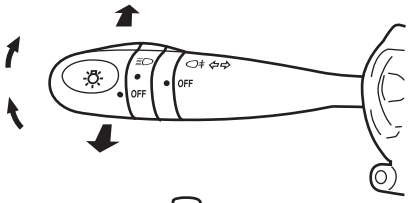

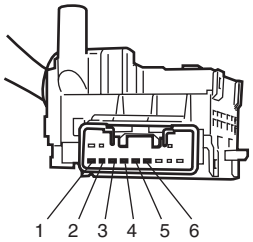

[B] \ [A]		1	4	2	3	5	6
OFF	LOW						
	PASS				○	○	
	HI						
•	LOW	○	○				
	PASS	○	○		○	○	
	HI	○	○				
≡D	LOW	○	○	○	○		○
	PASS	○	○	○	○	○	
	HI	○	○	○	○	○	

I5JB0D920011-04

[A]: Terminal
[B]: Shaft condition

With auto-on headlight switch

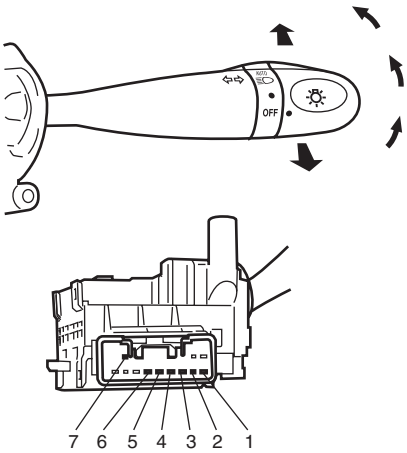

[B] \ [A]		1	4	2	3	5	6	7
OFF	LOW						○	○
	PASS				○	○		○
	HI					○		○
•	LOW	○	○				○	○
	PASS	○	○		○	○		○
	HI	○	○			○		○
	LOW	○	○		○		○	○
	PASS	○	○		○	○		○
	HI	○	○		○	○		○
AUTO	LOW			○	○		○	○
	PASS			○	○	○		○
	HI			○	○	○		○

I6RW0C920019-01

[A]:	Terminal
[B]:	Shaft condition

Hazard Warning Switch Removal and Installation

S7RW0A9206008

Removal

1) Disconnect negative (–) cable at battery.
2) Remove center ventilation louver (1) referring to “Center Ventilation Louver Removal and Installation in Section 7A”.
3) Disconnect coupler, and then remove hazard warning switch (2) from center ventilation louver (1) while releasing the locks (3).

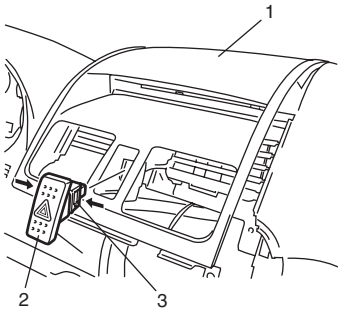

I5RW0A920009-01

Installation

Reverse removal procedure for installation.

Hazard Warning Switch Inspection

S7RW0A9206009

Check for continuity between terminals at each switch position. If check result is not as specified, replace switch.

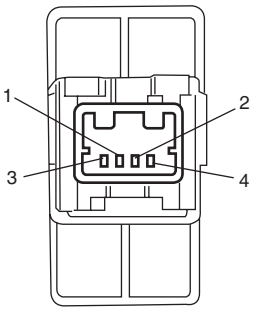

Switch \ Terminal	1	2	3	4
OFF			○	○
ON	○	○	○	○

I5RW0C920004-01

Brake Light Switch Inspection

S7RW0A9206010

Check brake light switch for continuity between terminals at each switch position.
If check result is not as specified, replace switch.

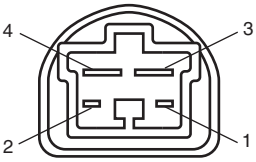

Shaft condition \ Terminal	1	2	3	4
FREE			○	○
PUSH	○	○		

I5RW0A920010-01

Turn Signal Light Switch (in Lighting Switch) Removal and Installation

S7RW0A9206011

For removal and Installation, refer to “Headlight Switch (in Lighting Switch) Removal and Installation”.

Turn Signal Light Switch (in Lighting Switch) Inspection

S7RW0A9206012

Check for continuity between terminals at each switch position. If check result is not as specified, replace switch.

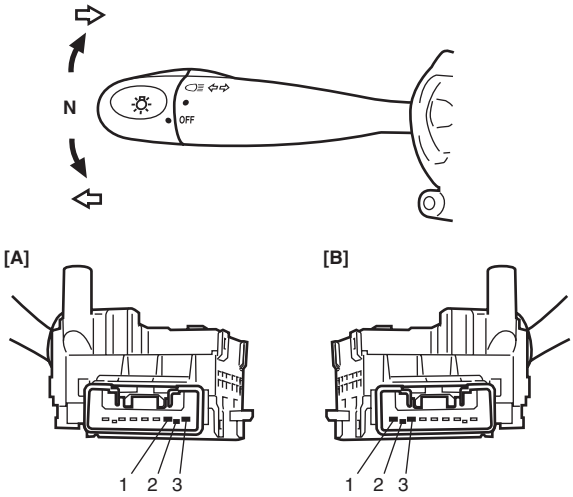

[D] \ [C]	1	2	3
⇦		○	○
N			
⇨	○	○	

I5JB0D920018-01

[A]:	Other than RHD without rear for light
[B]:	RHD without rear fog light
[C]:	Terminal
[D]:	Switch position

Turn Signal and Hazard Warning Relay Removal and Installation

S7RW0A9206013

Removal

1) Disconnect negative (–) cable at battery.
2) Remove junction block assembly (1) referring to “BCM (Included in Junction Block) Removal and Installation in Section 10B”.
3) Remove turn signal and hazard warning relay (2).

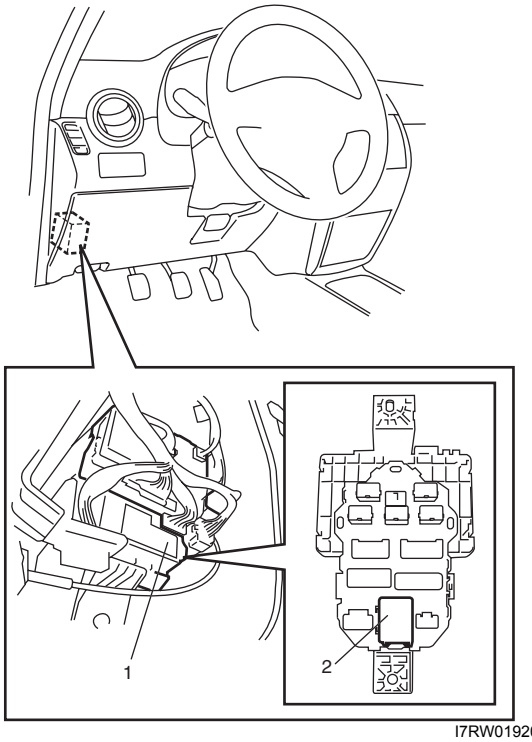

I7RW01920008-01

Installation

Reverse removal procedure for installation.

Turn Signal and Hazard Warning Relay Inspection

S7RW0A9206014

1) Connect turn signal and hazard warning relay (1), battery (2) and six test bulbs ((12 V, 21 W) (3) and 12 V, 5 W (4)) as shown.

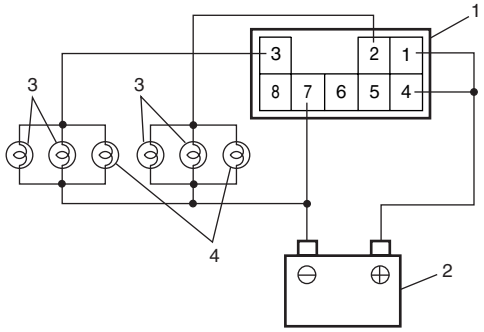

I4RS0A920014-01

2) Check turn L circuit
   Connect terminal “5” and battery negative (–) terminal by a jumper wire.
   Check left side bulbs (1) for flashing cycle.
   If check result is not as specified, replace turn signal and hazard warning relay.

   Reference flashing cycle
   60 – 120 cycle/minute

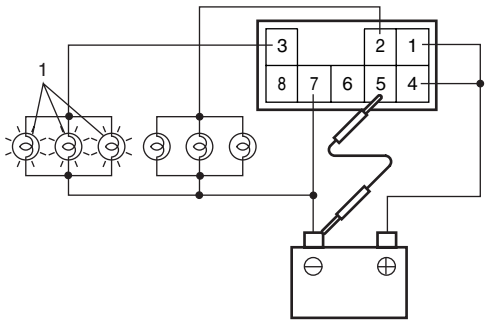

I4RS0A920015-01

3) Check turn R circuit
   Connect terminal “6” and battery negative (–) terminal by a jumper wire.
   Check right side bulbs (1) for flashing cycle.
   If check result is not as specified, replace turn signal and hazard warning relay.

   Reference flashing cycle
   60 – 120 cycle/minute

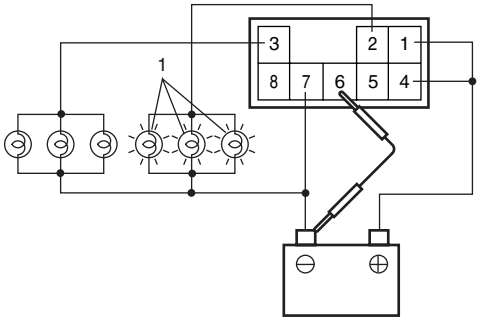

I4RS0A920016-01

4) Check Hazard ON circuit
   Connect terminal “8” and battery negative (–) terminal by a jumper wire.
   Check all bulbs (1) for flashing cycle.
   If check result is not as specified, replace turn signal and hazard warning relay.

   Reference flashing cycle
   60 – 120 cycle/minute

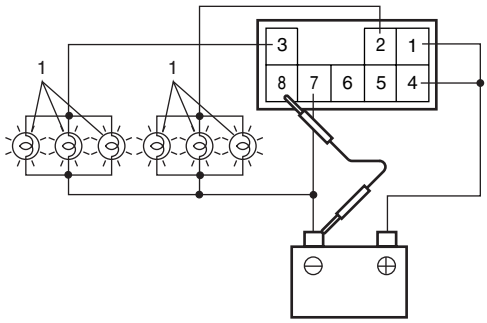

I4RS0A920017-01

License Light Assembly Removal and Installation (Hatchback)

S7RW0A9206015

Removal

1) Disconnect negative (–) cable at battery.
2) Remove rear end door license garnish referring to “Rear End Door Lock Assembly Components (Hatchback Model) in Section 9F”.
3) Disconnect coupler (1) from license light.
4) Push locking part to arrow direction, and then remove license light.

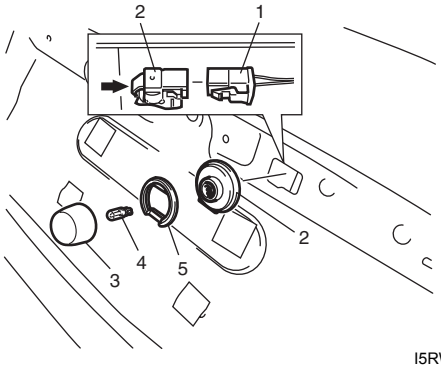

I5RW0A920012-01

2.	License light socket
3.	License light lens
4.	License light bulb
5.	License light socket cover

Installation

Reverse removal procedure for installation.

License Light Removal and Installation (Sedan)

S7RW0A9206029

Removal

1) Remove trunk lid trim (1) from trunk lid panel.

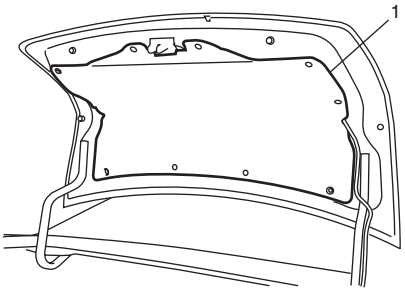

I6RW0B920004-01

2) Remove trunk lid license garnish referring to “Trunk Lid Lock Assembly Components (Sedan Model) in Section 9F”
3) Disconnect coupler from license light socket.
4) Remove license light bulb (1) as shown.
5) Push locking part (2) to arrow direction, and then remove license light lens.

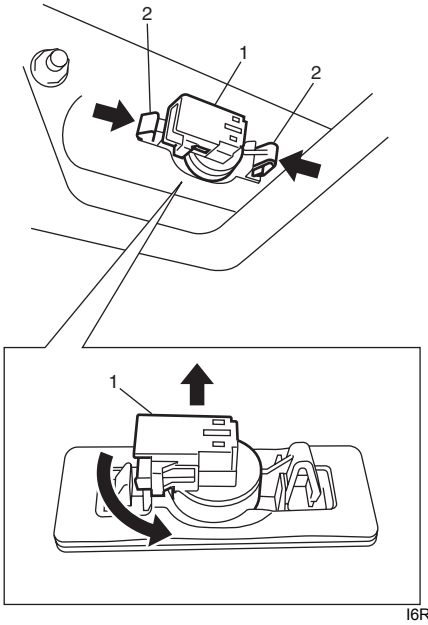

I6RW0B920005-01

Installation

Reverse removal procedure for installation.

Front Fog Light Assembly Removal and Installation (If Equipped)

S7RW0A9206016

⚠ WARNING

- **To avoid danger of being burned, don’t touch when the bulb is hot.**
- **Don’t touch glass surface of bulb to avoid deteriorate as the case may be unclear when bulb light on at dirty condition.**

Removal

1) Disconnect negative (–) cable at battery.
2) Remove front bumper. Refer to “Front Bumper and Rear Bumper Components in Section 9K”.
3) Disconnect coupler from fog light (1).
4) Remove front fog light as follows.
   Hatchback
   - Detach fog light pushing clips to arrow direction, and remove front fog light.

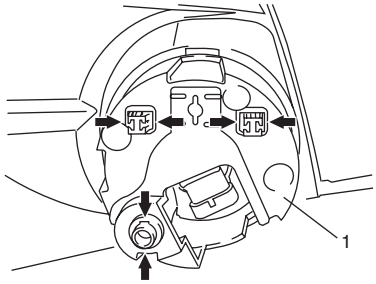

I5RW0A920013-01

   Sedan
   - Remove fog light screws (2), and remove front fog light.

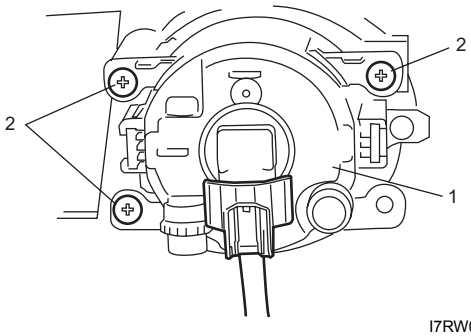

I7RW0A920002-02

Installation

Reverse removal procedure for installation nothing the following:

- After installing, adjust aiming referring to “Front Fog Light Aiming Adjustment with Screen (If Equipped)”.

Front Fog Light Switch Inspection (If Equipped)

S7RW0A9206017

NOTE

Front fog lights light up only when headlight switch is in HEADLIGHT position (low or high beams) or SMALL position. Front fog lights turn OFF automatically when headlight switch is turned to OFF position. If front fog light switch holds ON position, front fog lights turn ON automatically when headlight switch is tuned to HEADLIGHT position (low or high beams) or SMALL position again.

Check for continuity between terminals at each switch position. If check result is not as specified, replace switch.

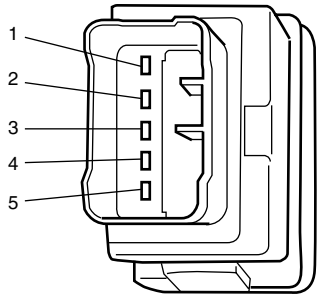

Terminal / Switch Position	2	3	1	5	4
OFF		○—◎—○		○—◎—○	
ON (PUSH IN)	○—	○—◎—○			

I4RS0A920021-01

Front Fog Light Aiming Adjustment with Screen (If Equipped)

S7RW0A9206018

Basic Aiming

NOTE

- **Unless otherwise obligated by local regulations, adjust front fog light aiming according to the following procedure.**
- **An example in case that the light-to-wall distance 10 m is shown in the illustration. The beam descending distance “H” is calculated when “a” is 10 m with the specification angle “b” (1.14°).**

1) Make sure the following items.
   - Place vehicle on a flat surface in front of blank wall (screen) (1) ahead of front fog light surface.

     Distance between screen and front fog light
     “a”: 10 m (32.8 ft.)
   - Adjust air pressure of all tired to the specified value respectively.
   - Bounce vehicle body up and down by hand to stabilize suspension.
   - Carry out aiming with a driver aboard.

     Driver’s weight
     75 kg (165 lb)
2) Check to see if hot spot (high intensity zone) of each front fog light axis falls as shown in the figure.

NOTE

If the fog lights interfere each other and make it hard to see the cut line clearly, cover the fog light on one side. This helps to make aiming adjustment easier.

Hot spot specification
Angle “b”: 1.14° (Specification)
Calculated distance “H”: Approx. 199 mm (7.83 in.)

3) If it is not set properly, align front fog light to specification by rotating aiming gear.

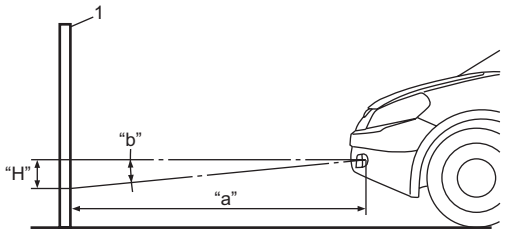

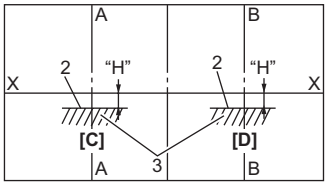

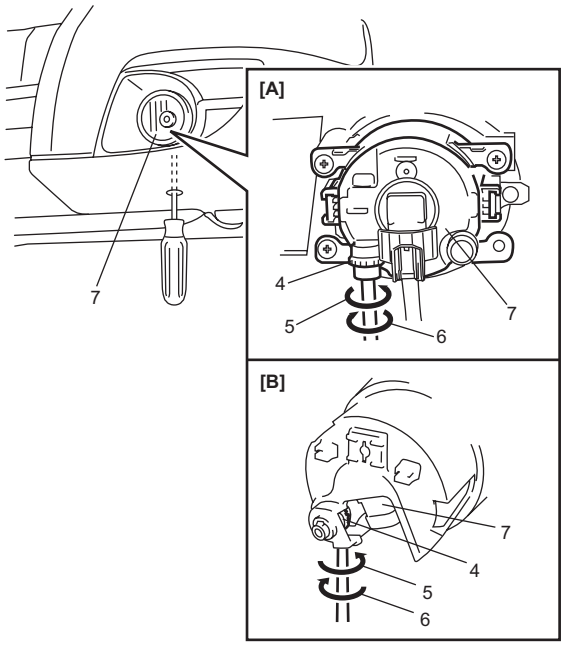

I7RW0A920003-03

2.	Bounding line
3.	Hot spot
4.	Aiming gear (for up / down adjustment)
5.	Turning (for up adjustment)
6.	Turning (for down adjustment)
7.	Front fog light assembly
X-X:	Horizontal center line of front fog light bulb
A-A:	Vertical center line of left front fog light bulb
B-B:	Vertical center line of right front fog light bulb
[A]:	Sedan
[B]:	Hatchback
[C]:	Left front fog light
[D]:	Right front fog light

Rear Fog Light Switch Inspection (If Equipped)

S7RW0A9206019

NOTE

- **Rear fog light switch can be turned to ON position only when headlight switch is turned to HEADLIGHT position (low or high beams).**
- **Rear fog light switch turns OFF automatically when headlight switch is turned to OFF position.**

Check for continuity between terminals at each switch position.
If check result is not as specified, replace switch.

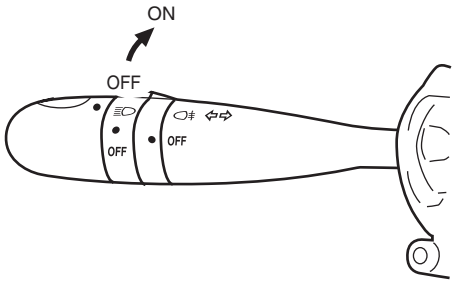

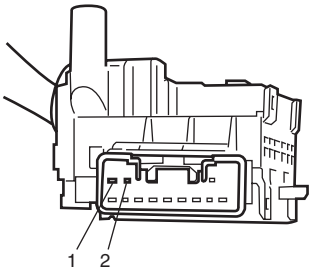

Shaft condition \ Terminal	1	2
OFF		
ON	○	○

I4RS0B920013-01

Headlight Manual Levering Switch Inspection (If Equipped)

S7RW0A9206020

Check for resistance between terminals at each switch position.
If check result is not as specified, replace switch.

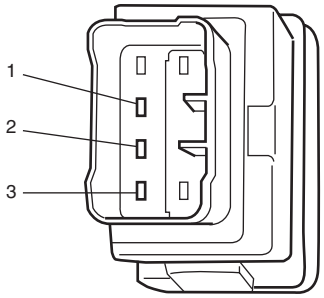

Switch Position	Terminal	Resistance (Ω)
-	1 and 2	4370 - 4830
0	1 and 3	646 - 714
	2 and 3	3724 - 4116
1	1 and 3	1292 - 1428
	2 and 3	3078 - 3402
2	1 and 3	1938 - 2142
	2 and 3	2432 - 2688
3	1 and 3	2584 - 2856
	2 and 3	1786 - 1974
4	1 and 3	3230 - 3570
	2 and 3	1140 - 1260

I4RS0B920012-01

Headlight Leveling Actuator Inspection (If Equipped)

S7RW0A9206021

Headlight auto leveling system

1) Make sure all couplers of headlight and leveling actuator are connected securely.
2) Park vehicle in front of blank wall (screen).
3) Turn ignition switch to ON position.
4) Perform “Headlight Leveling Warning Light Check”.
5) Connect service wire (2) to terminals of diagnosis connector (1).
6) Perform Steps a) through c) described below within 20 seconds after Step 5).
   a) Turn lighting switch (3) to “HEAD” position and then turn lighting switch to OFF position.
   b) Repeat Step a) 2 times.
   c) Turn lighting switch (3) to “HEAD” position.

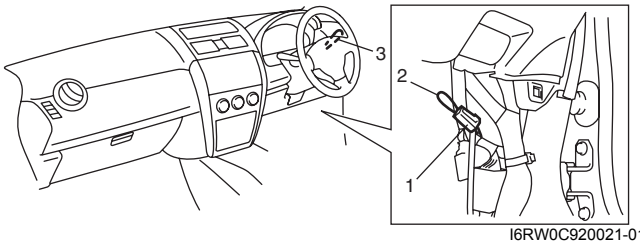

I6RW0C920021-01

7) Check that optical axes of headlights reflected on blank wall (screen) change. If not, go to “Headlight Auto Leveling System Symptom Diagnosis (If Equipped)”.

Headlight manual leveling system

1) Make sure all couplers of headlight and leveling actuator are connected securely.
2) Park vehicle in front of blank wall (screen).
3) Turn ignition switch to ON position.
4) Turn lighting switch to “HEAD” position.
5) Move headlight leveling switch and check that optical axes of headlights reflected on blank wall (screen) change then. Also check that leveling actuator sounds slightly while moving leveling switch. If optical axes do not change, go to “Headlight Manual Leveling System Symptom Diagnosis (If Equipped)”.

Height Sensor Removal and Installation (If Equipped)

S7RW0A9206022

Removal

⚠ CAUTION

- **Do not remove bracket (4) and link (3) from height sensor (2). Removal will spoil its original function. If faulty condition is found, replace it with new one in a set.**
- **If height sensor was dropped from a height of 30 cm (0.9 ft) or more, replace it with new one.**

1) Disconnect negative (–) cable at battery.
2) Disconnect height sensor connector (1) from height sensor (2).
3) Remove front and rear height sensor (2) with its bracket (4) from suspension frame (6) or rear floor center cross member (7) and lower arm (5).

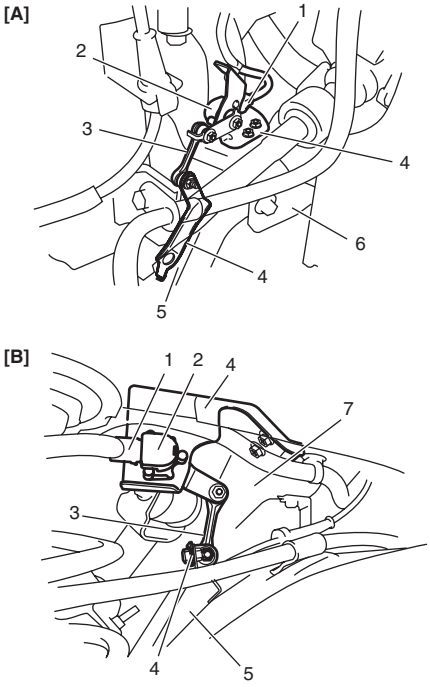

I6RW0C920022-01

[A]: Front	[B]: Rear

Installation

For installation, reverse removal procedure noting the following.

- Check that bracket and link of height sensor are not deformed.
- Tighten height sensor bolts and nuts to specified torque.

Tightening torque
Height sensor bolt (a): 5.5 N·m (0.6 kgf-m, 4.0 lb-ft)
Height sensor nut (b): 13 N·m (1.3 kgf-m, 9.5 lb-ft)

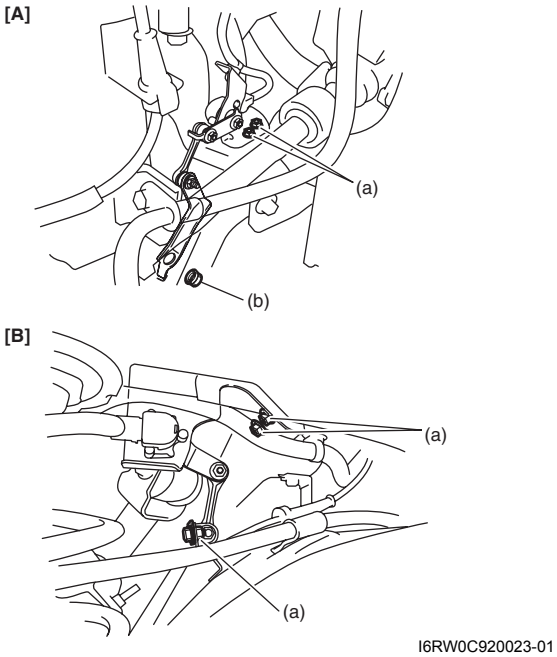

I6RW0C920023-01

[A]: Front	[B]: Rear

- Connect connector securely.
- After installation, initialize headlight auto leveling system referring to “Initialization of Headlight Auto Leveling System”.

Height Sensor and Its Circuit Inspection (If Equipped)

S7RW0A9206023

1) Remove front or rear height sensor from vehicle referring to “Height Sensor Removal and Installation (If Equipped)”.
2) Connect connector to height sensor.
3) Vary position of height sensor link (1) and measure voltage between terminals of headlight leveling control module (4) as described below.
   - For front height sensor
     Between “G14-20” and “G14-22” terminals of headlight leveling control module.
   - For rear height sensor
     Between “G14-19” and “G14-21” terminals of headlight leveling control module.
     If check result is not as specified, perform inspections of power supply, ground and signal circuits of front or rear height sensor which is described under “Inspection of Headlight Leveling Control Module and Its Circuit (Headlight Auto Leveling System)”. If circuits are OK, replace height sensor.

<u>Height sensor output voltage</u>
Full bound position (2): about 0.5 V
Full rebound position (3): about 4.5 V

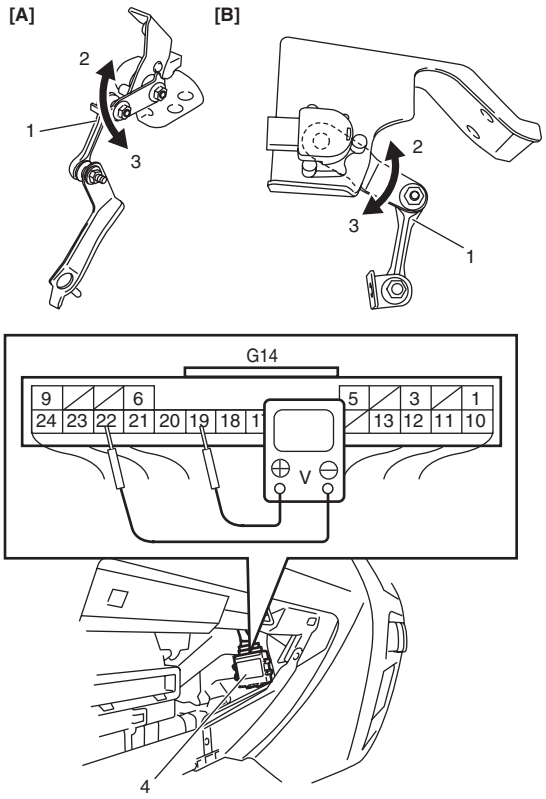

I6RW0C920024-01

[A]: Front	[B]: Rear

Headlight Leveling Control Module Removal and Installation (If Equipped)

S7RW0A9206024

Removal

1) Disconnect negative (–) cable at battery.
2) Remove glove box.
3) Disconnect connector (1) from headlight leveling control module (2).
4) Remove headlight leveling control module with its bracket from steering support member (3).

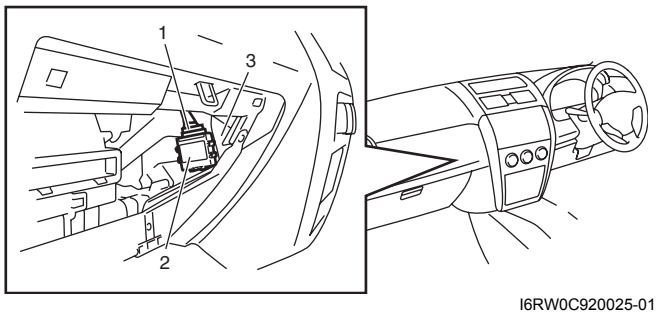

I6RW0C920025-01

Installation

For installation, reverse removal procedure noting the following.

- Connect connector securely.
- After replacing headlight leveling control module with new one, initialize headlight auto leveling system referring to “Initialization of Headlight Auto Leveling System”.

Initialization of Headlight Auto Leveling System

S7RW0A9206025

Initialization of the headlight auto leveling system is to make the headlight leveling control module learn signals which are fed from the height sensors when the vehicle is at the standard height. Standard height means the height of the vehicle with a driver but without load in it. Initialization of the headlight auto leveling system is required when any of the following works has been performed.

- Replacement of headlight leveling control module
- Removal of front and/or rear height sensor link from lower arm
- Removal of front and/or rear height sensor from suspension frame
- Replacement of front and/or rear height sensor

Without initialization of the headlight auto leveling system, it is not possible to obtain its proper function. Also, if the headlight auto leveling system is not initialized after replacing the headlight leveling control module, the headlight leveling warning light in the combination meter flashes.

1) Observe the following instructions.
   - Park vehicle on level ground.
   - Adjust air pressure of all tires to the specified value respectively.
   - Bounce vehicle body up and down by hand to stabilize suspension.
2) Turn ignition switch to ON position.
3) Perform “Headlight Leveling Warning Light Check”.
4) Connect service wire (2) to terminals of diagnosis connector (1).
5) Perform Steps a) through b) described blow within 20 seconds after Step 4).
   a) Turn lighting switch (3) to “HEAD” position and then turn lighting switch to OFF position.
   b) Repeat Step a) 2 times.

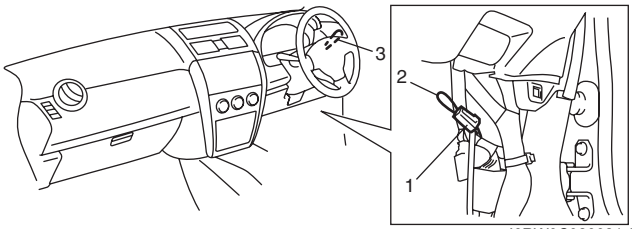

I6RW0C920021-01

6) Confirm that headlight leveling warning light flashes 3 times and turns off, which indicates that system initialization was completed properly. If it does not turn off after flashing 3 times, it means initialization was not successful. In such case, turn off ignition switch and perform Steps 1) to 6) again.

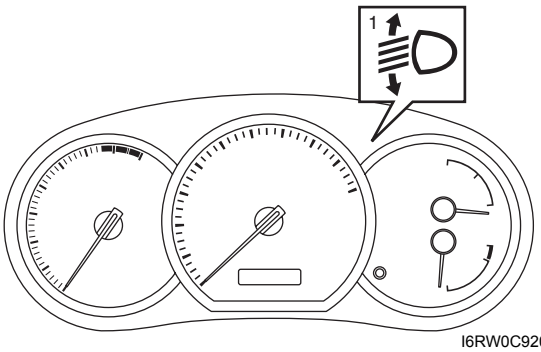

I6RW0C920009-01

Auto-On Headlight Sensor Inspection (If Equipped)

S7RW0A9206026

1) Disconnect negative (–) cable at battery.
2) Remove auto-on headlight sensor (1) located on the passenger side of the dashboard (2). Be careful not to damage the sensor (1) and dashboard by using rag (3).

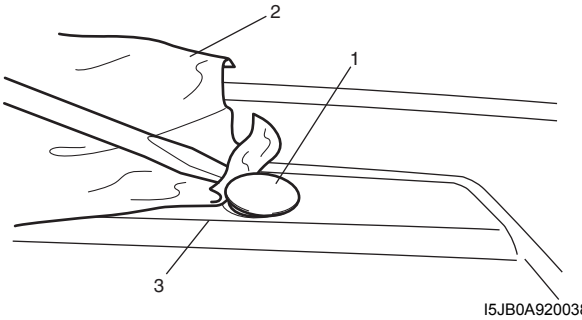

I5JB0A920038-01

3) Measure voltage between white wire terminal and black wire terminal at the following condition.
   If measured voltage is out of specification, replace sensor.

   <u>Auto-on headlight sensor voltage specifications</u>
   Cover the sensor lens with hand: 0.4 V
   Light the sensor lens with incandescent lamp 100 W: 3 – 4.5 V

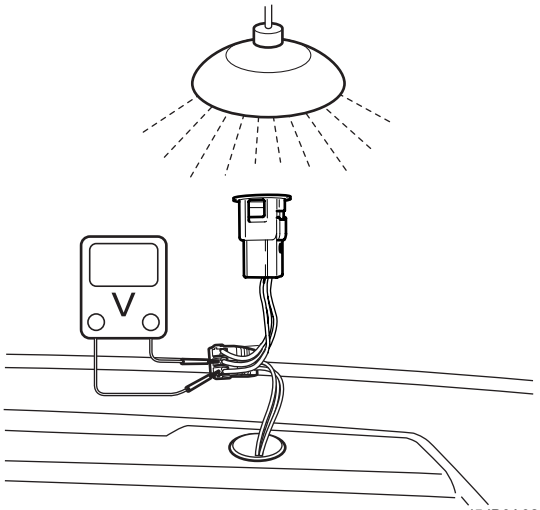

I5JB0A920039-01

Illumination Cancel Switch Inspection (If Equipped)

S7RW0A9206027

Check for continuity between terminals at each switch position.
If check result is not as specified, replace switch.

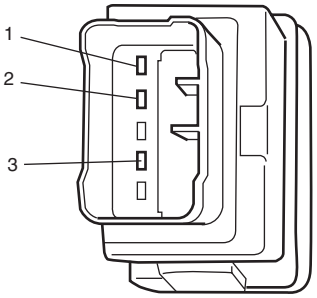

Switch Position \ Terminal	1	2	3
OFF	○		○
ON (PUSH IN)		○	○

I5RW0A920015-01

Tail Light Relay, Headlight Relay, Front Fog Light Relay Inspection (If Equipped)

S7RW0A9206028

1) Remove tail light relay (1), headlight relay and/or front fog light relay (2).

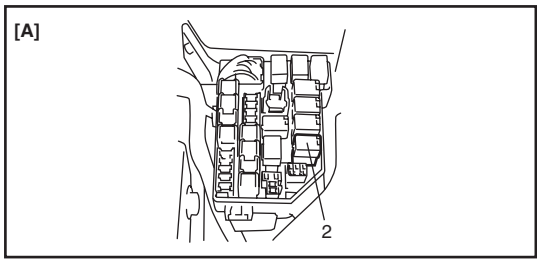

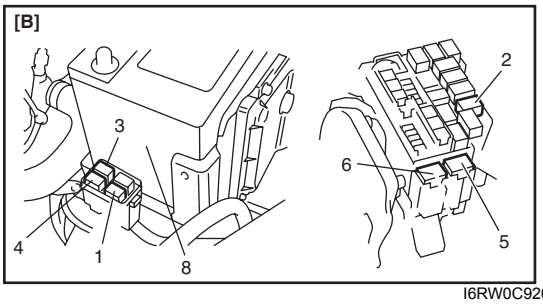

I6RW0C920027-02

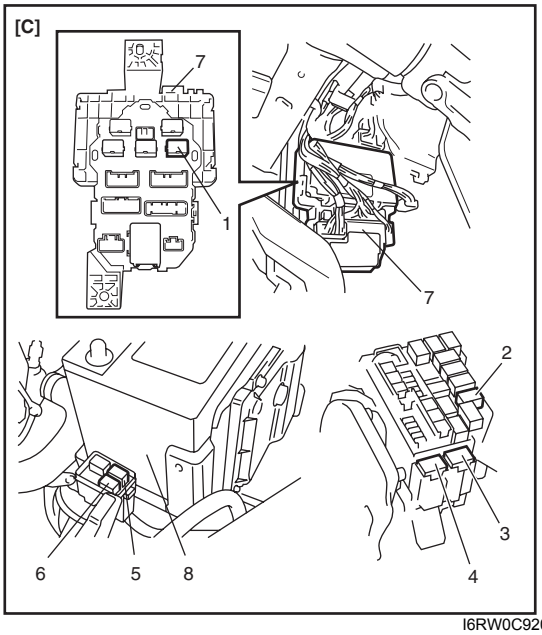

I6RW0C920028-01

[A]:	Junction block with BCM type (other than discharge headlight model)
[B]:	Junction block with BCM type (discharge headlight model)
[C]:	Junction block without BCM type
3.	Headlight low beam relay (left side)
4.	Headlight low beam relay (right side)
5.	Headlight high beam relay (left side)
6.	Headlight high beam relay (right side)
7.	Junction block
8.	Battery

2) Check that there is no continuity between terminal “3” and “4”. If there is continuity, replace relay.
3) Connect battery positive (+) terminal to terminal “2” of relay.
4) Connect battery negative (–) terminal to terminal “A” of relay.
5) Check continuity between terminal “3” and “4”. If there is no continuity when relay is connected to the battery, replace relay.

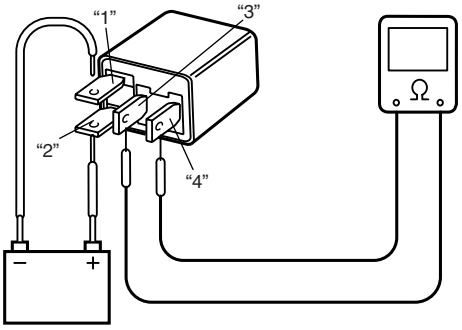

I4RS0A920022-01

Specifications

Tightening Torque Specifications

S7RW0A9207001

Fastening part	Tightening torque			Note
	N·m	kgf-m	lb-ft	
Height sensor bolt	5.5	0.6	4.0	☞
Height sensor nut	13	1.3	9.5	☞

Reference:
For the tightening torque of fastener not specified in this section, refer to “Fasteners Information in Section 0A”.

Instrumentation / Driver Info. / Horn

Precautions

Precautions in Diagnosing Troubles for Combination Meter

S7RW0A9300001

Combination meter uses signals (information) from each control module by CAN communication to control speedometer, tachometer, fuel meter, engine coolant temp meter, warning light and indicator light (other than air bag warning light, EPS warning light, headlight leveling warning light (if equipped), rear fog light indicator light (if equipped), high beam indicator light and turn signal indicator light). Therefor, check that no DTC is detected in each module before performing combination meter symptom diagnosis. If any DTC is detected, correct trouble indicated by that DTC troubleshooting first.

General Description

CAN Communication System Description

S7RW0A9301001

Refer to “CAN Communication System Description in Section 1A” for CAN communication system description. Combination meter communicates control data with each control module as follows.

Combination Meter Transmission Data

			BCM
Combination meter	DATA Transmit	Combination meter spec signal	○

I5RW0A930001-02

Combination Meter Reception Data

			ECM	TCM (A/T model)	BCM	ABS/ESP® Control Module	4WD Control Module (if equipped)	Keyless Start Control Module (if equipped)
Combination Meter	DATA Recive	Engine speed signal	○					
		Immobilizer indicator light control signal	○					
		Vehicle speed signal	○					
		Engine coolant temperature signal	○					
		Fuel level signal	○					
		MIL control signal	○	○				
		Transmission range sensor signal		○				
		Transmission warning light signal		○				
		Diagnostic trouble code (DTC)			○			
		Brake fluid level switch signal (brake warning light control signal)			○			
		Driver side seat belt buckle switch signal (seat belt reminder light control signal)			○			
		Charging system warning light signal (charge warning light control signal)			○			
		Engine oil pressure switch signal (oil pressure warning light control signal)			○			
		Parking brake switch signal (brake warning light control signal)			○			
		Illumination ON signal			○			
		Door switch signal (open door warning light control signal)			○			
		ABS indication signal				○		
		EBD indication signal (brake warning light control signal)				○		
		ESP® status signal				○*		
		4WD mode indicator control signal					○	
		Key indicator light control signal						○

I7RW0A930001-02

NOTE

***: ESP® model**

Auto Volume Control System Description (If Equipped)

S7RW0A9301002

Function of auto volume control system is to vary sound volume according to changes of vehicle speed. How much sound volume varies depends on selected level.

Reference Correlation Chart of Vehicle Speed and Sound Volume

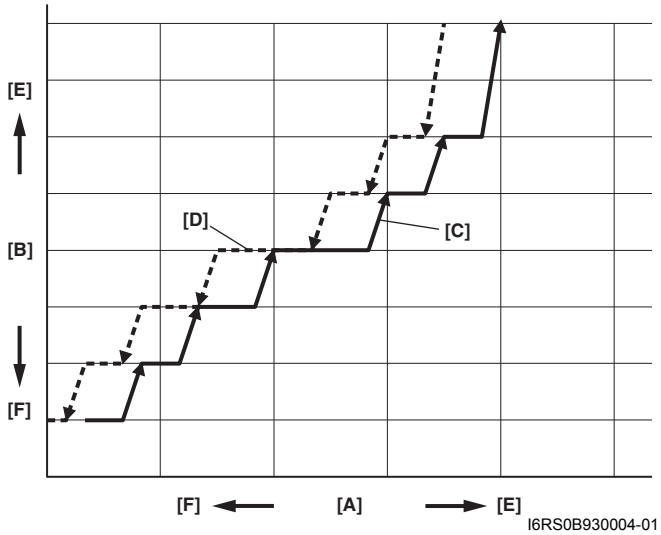

[A]: Vehicle speed	[C]: Acceleration	[E]: Increase
[B]: Sound volume	[D]: Deceleration	[F]: Decrease

Schematic and Routing Diagram

Combination Meter Circuit Diagram

S7RW0A9302001

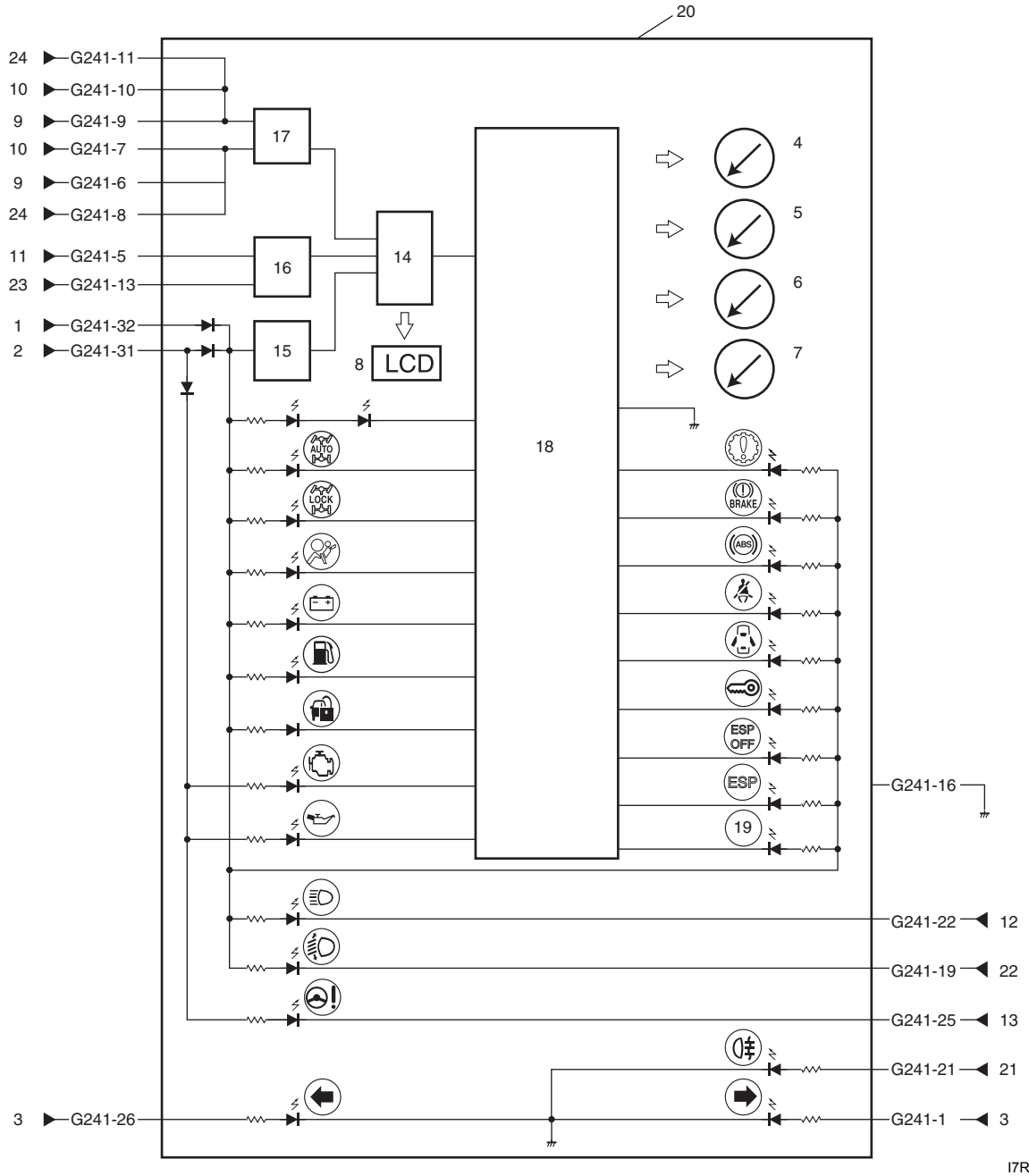

I7RW0A930002-01

1. DOME fuse	9. 4WD control module (if equipped)	17. CAN driver
2. METER fuse	10. CAN junction connector	18. Stepper motor and LED output driver
3. Combination switch	11. SDM	19. A/T shift position indicator (“P”, “R”, “N”, “D”, “3”, “2” and “L”)
4. Tachometer	12. Combination switch (high beam)	20. Combination meter
5. Speedometer	13. P/S control module	21. Combination switch (rear fog light)
6. Fuel meter	14. CPU	22. Headlight leveling control module (if equipped)
7. ECT meter	15. Power supply	23. Illumination cancel switch (if equipped)
8. ODO-TRIP	16. Interface circuit	24. Steering angle sensor (ESP® model)

Terminal arrangement of coupler viewed from terminal side

NOTE

Molded numbers (1) have no relation to the terminal numbers.

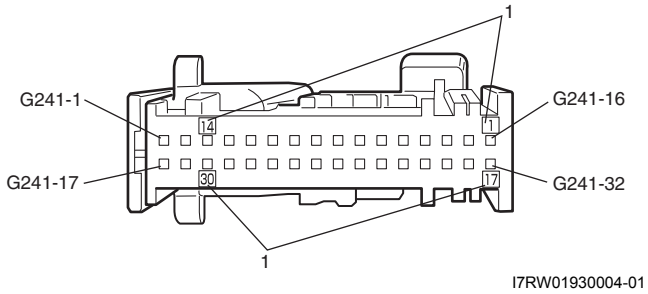

Terminal	Circuit	Terminal	Circuit
G241-1	To turn signal light switch (turn R)	G241-17	—
G241-2	—	G241-18	—
G241-3	—	G241-19	To headlight leveling control module (if equipped)
G241-4	—	G241-20	—
G241-5	To SDM (air bag warning light control signal)	G241-21	To rear fog light switch (if equipped)
G241-6	CAN communication line (Active High Signal)	G241-22	To lighting switch (high beam)
G241-7	CAN communication line (Active High Signal)	G241-23	—
G241-8	—	G241-24	—
G241-9	CAN communication line (Active Low Signal)	G241-25	To P/S control module (EPS warning light control signal)
G241-10	CAN communication line (Active Low Signal)	G241-26	To turn signal light switch (turn L)
G241-11	—	G241-27	—
G241-12	—	G241-28	—
G241-13	To illumination cancel switch (if equipped)	G241-29	—
G241-14	—	G241-30	—
G241-15	—	G241-31	To METER fuse
G241-16	GND	G241-32	To DOME fuse

Component Location

Audio System Component Location

S7RW0A9303001

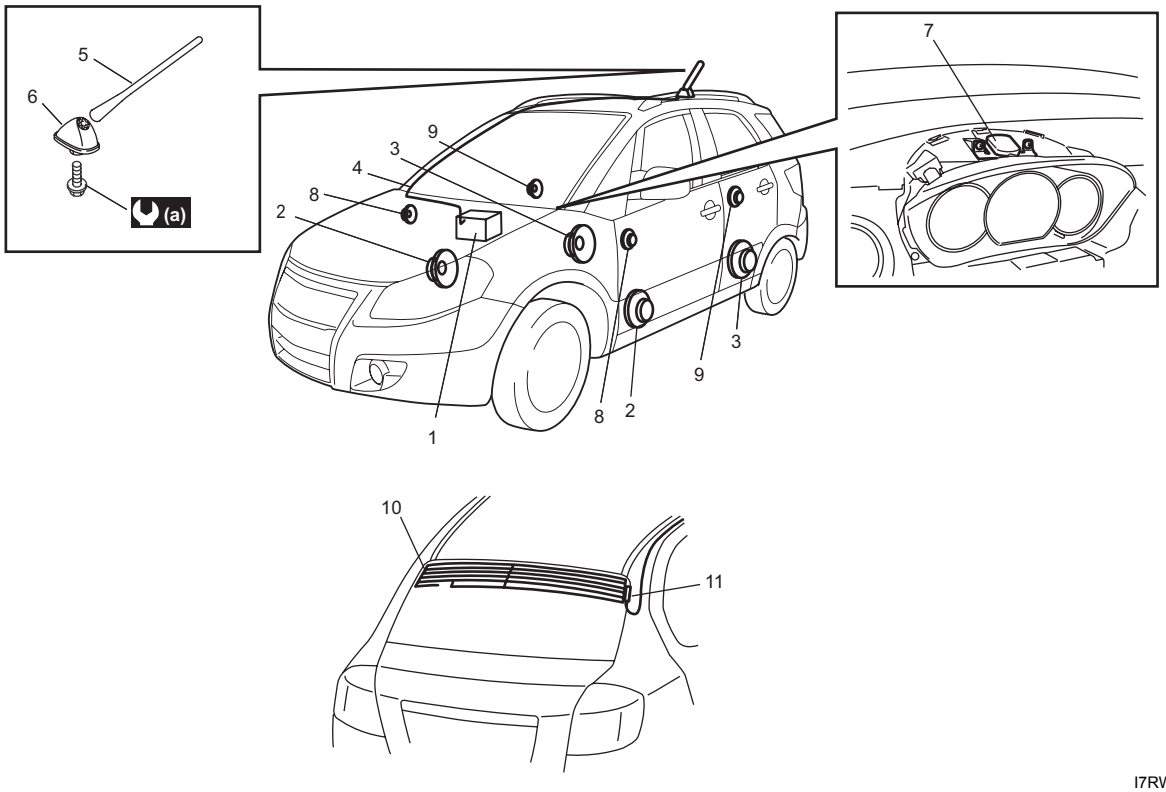

I7RW0A930003-02

1. Radio or navigation assembly	4. Antenna feeder	7. GPS antenna (if equipped)	10. Glass antenna (Sedan)
2. Front speaker	5. Antenna (Hatchback)	8. Front tweeter speaker (if equipped)	11. Antenna amplifier (Sedan)
3. Rear speaker	6. Antenna base	9. Rear tweeter speaker (if equipped)	(a) : 5.0 N·m (0.5 kgf-m, 4.0 lb-ft)

Diagnostic Information and Procedures

Speedometer and VSS Symptom Diagnosis

S7RW0A9304001

Condition	Possible cause	Correction / Reference Item
Speedometer shows no operation or incorrect operation	Circuit fuse blown	*Replace fuse and check for short circuit.*
	Front wheel speed sensor or sensor encoder faulty (M/T model)	*Check front wheel speed sensor or sensor encoder referring to "Front and Rear Wheel Speed Sensor On-Vehicle Inspection in Section 4E" or "Front Wheel Speed Sensor Encoder On-Vehicle Inspection in Section 4E".*
	Output shaft speed sensor (VSS) faulty (A/T model)	*Check output shaft speed sensor (VSS) referring to "Output Shaft Speed Sensor (VSS) Inspection in Section 5A"*
	Wiring or grounding faulty	*Repair circuit.*
	Combination meter faulty	*Replace combination meter.*
	TCM faulty (A/T model)	*Check input and output signal of TCM referring to "Inspection of TCM and Its Circuits in Section 5A"*
	ECM faulty	*Replace after making sure that none of above parts is faulty.*

Tachometer Symptom Diagnosis

S7RW0A9304002

Condition	Possible cause	Correction / Reference Item
Tachometer shows no operation or incorrect operation	Circuit fuse blown	*Replace fuse and check for short circuit.*
	Wiring or grounding faulty	*Repair circuit.*
	Combination meter faulty	*Replace combination meter.*
	ECM faulty	*Replace after making sure that none of above parts is faulty.*

Engine Coolant Temperature (ECT) Meter Symptom Diagnosis

S7RW0A9304003

Condition	Possible cause	Correction / Reference Item
Engine coolant temperature (ECT) meter shows no operation or incorrect operation	Circuit fuse blown	*Replace fuse and check for short circuit.*
	ECT sensor faulty	*Check ECT sensor referring to "Engine Coolant Temperature (ECT) Sensor Inspection in Section 1C".*
	Wiring or grounding faulty	*Repair circuit.*
	Combination meter faulty	*Replace combination meter.*
	ECM faulty	*Replace after making sure that none of above parts is faulty.*

Fuel Meter Symptom Diagnosis

S7RW0A9304004

Condition	Possible cause	Correction / Reference Item
Fuel meter shows no operation or incorrect operation	Circuit fuse blown	*Replace fuse and check for short circuit.*
	Fuel level sensor faulty	*Check fuel level sensor referring to "Fuel Level Sensor Inspection".*
	Wiring or grounding faulty	*Repair circuit.*
	Combination meter faulty	*Replace combination meter.*
	ECM faulty	*Replace after making sure that none of above parts is faulty.*

Low Fuel Warning Light Symptom Diagnosis

S7RW0A9304005

NOTE

- **Confirm that fuel meter is in good condition before referring to the following possible causes.**
- **When fuel level sensor circuit is open or short, fuel level meter indicates empty even if fuel tank does not empty.**
- **The low fuel warning light comes ON when fuel level is lower than specification below.**

Low fuel warning light operation:

Low fuel warning light operation:	Fuel amount:	Resistance of fuel level sensor:
ON (2WD)	Approx. 7.5 liter	Approx. 261 Ω
ON (4WD)	Approx. 6.8 liter	Approx. 261 Ω

Condition	Possible cause	Correction / Reference Item
Low fuel warning light does not come ON when fuel level is lower than specification	Circuit fuse blown	*Replace fuse and check for short circuit.*
	Fuel level sensor faulty	*Check fuel level sensor referring to "Fuel Level Sensor Inspection".*
	Wiring or grounding faulty	*Repair circuit.*
	Combination meter faulty	*Replace combination meter.*
	ECM faulty	*Replace after making sure that none of above parts is faulty.*
Low fuel warning light comes ON steady	Low fuel	*Refill fuel.*
	Fuel level sensor faulty	*Check fuel level sensor referring to "Fuel Level Sensor Inspection".*
	Wiring or grounding faulty	*Repair circuit.*
	Combination meter faulty	*Replace combination meter.*
	ECM faulty	*Replace after making sure that none of above parts is faulty.*

Oil Pressure Warning Light Symptom Diagnosis

S7RW0A9304006

Condition	Possible cause	Correction / Reference Item
Oil pressure warning light does not light up when ignition switch is turned to ON position at engine off	Circuit fuse blown	*Replace fuse and check for short circuit.*
	Oil pressure switch faulty	*Check oil pressure switch referring to "Oil Pressure Switch Inspection".*
	Wiring or grounding faulty	*Repair circuit.*
	Combination meter faulty	*Replace combination meter.*
	BCM faulty	*Replace after making sure that none of above parts is faulty.*
Oil pressure warning light stays ON	Oil pressure switch faulty	*Check oil pressure switch referring to "Oil Pressure Switch Inspection".*
	Wiring or grounding faulty	*Repair circuit.*
	Combination meter faulty	*Replace combination meter.*
	BCM faulty	*Replace after making sure that none of above parts is faulty.*

Brake and Parking Brake Warning Light Symptom Diagnosis

S7RW0A9304007

Condition	Possible cause	Correction / Reference Item
Brake warning light does not light up when brake fluid level is low or parking brake is pulled up or for 5 seconds after turning ON ignition switch	Circuit fuse blown	*Replace fuse and check for short circuit.*
	Brake fluid level switch faulty	*Check brake fluid level switch referring to "Brake Fluid Level Switch Inspection".*
	Parking brake switch faulty	*Check parking brake switch referring to "Parking Brake Switch Inspection".*
	ABS system faulty	*Refer to "ABS Check in Section 4E".*
	Wiring or grounding faulty	*Repair circuit.*
	Combination meter faulty	*Replace combination meter.*
	BCM faulty	*Replace after making sure that none of above parts is faulty.*
Brake warning light stays ON	Brake fluid level switch faulty	*Check brake fluid level switch referring to "Brake Fluid Level Switch Inspection".*
	Parking brake switch faulty	*Check parking brake switch referring to "Parking Brake Switch Inspection".*
	EBD system faulty	*Refer to "EBD Warning Light (Brake Warning Light) Check in Section 4E".*
	Wiring or grounding faulty	*Repair circuit.*
	Combination meter faulty	*Replace combination meter.*
	BCM faulty	*Replace after making sure that none of above parts is faulty.*

Seat Belt Reminder Light Symptom Diagnosis

S7RW0A9304008

Condition	Possible cause	Correction / Reference Item
Seat belt reminder light does not light up	Circuit fuse blown	*Replace fuse and check for short circuit.*
	Seat belt switch faulty	*Check seat belt switch referring to "Front Seat Belt Inspection in Section 8A".*
	Wiring or grounding faulty	*Repair circuit.*
	Combination meter faulty	*Replace combination meter.*
	BCM faulty	*Replace after making sure that none of above parts is faulty.*
Seat belt reminder light stays ON	Seat belt switch faulty	*Check seat belt switch referring to "Front Seat Belt Inspection in Section 8A".*
	Wiring or grounding faulty	*Repair circuit.*
	Combination meter faulty	*Replace combination meter.*
	BCM faulty	*Replace after making sure that none of above parts is faulty.*

A/T Shift Position Indicator Symptom Diagnosis (A/T Model)

S7RW0A9304009

Condition	Possible cause	Correction / Reference Item
All A/T shift position indicator does not light up	Circuit fuse blown	*Replace fuse and check for short circuit.*
	Transmission range sensor (shift switch) faulty	*Check transmission range sensor referring to "Transmission Range Sensor Inspection and Adjustment in Section 5A".*
	Wiring or ground faulty	*Repair circuit.*
	Combination meter faulty	*Replace combination meter.*
	TCM faulty	*Replace after making sure that none of above parts is faulty.*

Charge Warning Light Symptom Diagnosis

S7RW0A9304010

Condition	Possible cause	Correction / Reference Item
Charge warning light does not come ON	Circuit fuse blown	*Replace fuse and check for short circuit.*
	Wiring or grounding faulty	*Repair circuit.*
	Combination meter faulty	*Replace combination meter.*
	BCM faulty	*Replace after making sure that none of above parts is faulty.*
Charge warning light stay ON	Charging system faulty	*Check charging system.*
	Wiring or grounding faulty	*Repair circuit.*
	Combination meter faulty	*Replace combination meter.*
	BCM faulty	*Replace after making sure that none of above parts is faulty.*

Main Beam (High Beam) Indicator Symptom Diagnosis

S7RW0A9304011

Condition	Possible cause	Correction / Reference Item
Main beam (high beam) indicator does not come ON	Circuit fuse blown	*Replace fuse and check for short circuit.*
	Combination switch faulty	*Check combination switch referring to "Headlight Switch (in Lighting Switch) Inspection in Section 9B".*
	Wiring or grounding faulty	*Repair circuit.*
	Combination meter faulty	*Replace combination meter.*
Main beam (high beam) indicator stay ON	Combination switch faulty	*Check combination switch referring to "Headlight Switch (in Lighting Switch) Inspection in Section 9B".*
	Wiring or grounding faulty	*Repair circuit.*
	Combination meter faulty	*Replace combination meter.*

Warning Buzzer Circuit Symptom Diagnosis

S7RW0A9304012

NOTE

- **Use of SUZUKI scan tool makes it easy to check whether a faulty condition is on the input side or output side of BCM. For checking procedure, refer to "Diagnosis Using Output Test Function of SUZUKI Scan Tool" under "Scan Tool Data in Section 10B".**
- **Check each part in the order from the top of the following list.**

Condition	Possible cause	Correction / Reference Item
Warning buzzer shows no sounding	Circuit fuse blown	*Replace fuse and check for short circuit.*
	Driver side door switch faulty	*Check driver side door switch referring to "Door Switch (Front / Rear Door) Inspection".*
	Lighting switch faulty	*Check lighting switch referring to "Headlight Switch (in Lighting Switch) Inspection in Section 9B".*
	Key reminder switch faulty	*Check key reminder switch referring to "Ignition Switch Inspection".*
	Seat belt switch faulty	*Check seat belt switch referring to "Front Seat Belt Inspection in Section 8A".*
	Wiring or grounding faulty	*Repair circuit.*
	BCM faulty	*Replace after making sure that none of above parts is faulty.*

Cigarette Lighter Symptom Diagnosis (If Equipped)

S7RW0A9304013

Condition	Possible cause	Correction / Reference Item
Cigarette lighter shows no operation	Circuit fuse blown	*Replace fuse and check for short circuit.*
	Cigarette lighter faulty	*Check cigarette lighter.*
	Ignition switch faulty	*Check ignition switch referring to "Ignition Switch Inspection".*
	Wiring or grounding faulty	*Repair circuit.*

Horn Symptom Diagnosis

S7RW0A9304014

Condition	Possible cause	Correction / Reference Item
Horn does not operate	Circuit fuse blown	*Replace fuse and check for short circuit.*
	Horn switch faulty	*Check horn switch.*
	Horn relay faulty	*Check horn relay referring to "Horn Relay Inspection".*
	Wiring or grounding faulty	*Repair circuit.*
	Horn faulty	*Check horn referring to "Horn Inspection".*

Information Display Symptom Diagnosis (If Equipped)

S7RW0A9304015

NOTE

This thermometer indicates the ambient temperature in the under side of front bumper member. Under any one of the following listed conditions, however, even when the ambient temperature goes up, the thermometer display does not rise so as to correct the rise of the ambient temperature caused by the radiant heat of the engine. When the ambient temperature drops, the thermometer reading follows the change in the temperature.
Be sure to bear this in mind when diagnosing trouble.

- **The vehicle speed is 30 km/h (18 mph) or lower.**
- **Vehicle speed signal is faulty.**
- **The ignition switch is turned on again within 2 hours.**

Condition	Possible cause	Correction / Reference Item
No displaying of information display	Circuit fuse Blown	*Replace fuse and check for short circuit.*
	Wiring or grounding faulty	*Repair circuit.*
	Information display unit faulty	*Replace unit.*
Incorrect thermometer display	Outside air temperature sensor faulty	*Check outside air temperature sensor referring to "Outside Air Temperature Sensor Inspection (If Equipped)".*
	Vehicle speed signal faulty	*Check ECM for DTC referring to "DTC Check in Section 1A".*
	Wiring or grounding faulty	*Repair circuit.*
	Information display unit faulty	*Replace unit.*
	BCM faulty	*Replace after making sure that none of above parts is faulty.*
Display of thermometer does not change at –30 °C (–22 °F)	Outside air temperature is –30 °C (–22 °F) or less	—
	Outside air temperature sensor faulty	*Check outside air temperature sensor referring to "Outside Air Temperature Sensor Inspection (If Equipped)".*
	Information display unit faulty	*Replace unit.*
	BCM faulty	*Replace after making sure that none of above parts is faulty.*

Condition	Possible cause	Correction / Reference Item
Display of thermometer does not change at 50 °C (122 °F)	Outside air temperature is 50 °C (122 °F) or more	—
	Outside air temperature sensor faulty	*Check outside air temperature sensor referring to "Outside Air Temperature Sensor Inspection (If Equipped)".*
	Information display unit faulty	*Replace unit.*
	BCM faulty	*Replace after making sure that none of above parts is faulty.*
Display of thermometer does not change at "- - - °C (°F)"	Outside air temperature sensor faulty	*Check outside air temperature sensor referring to "Outside Air Temperature Sensor Inspection (If Equipped)".*
	Outside air temperature sensor circuit is open or short	*Repair circuit.*
	Wiring or grounding faulty	*Repair circuit.*
	Information display unit faulty	*Replace unit.*
	BCM faulty	*Replace after making sure that none of above parts is faulty.*
Display of fuel consumption does not change at "- - - l / 100 km (km/l, MPG)"	Vehicle is not running (instantaneous fuel consumption mode)	—
	Fuel consumption was reset (average fuel consumption mode, if equipped)	*Vehicle runs for a while.*
	Vehicle speed signal faulty	*Check ECM for DTC referring to "DTC Check in Section 1A".*
	Wiring or grounding faulty	*Repair circuit.*
	CAN communication data (information) can not be received by BCM	*Check BCM for DTC referring to "DTC Check in Section 10B".*
	Information display unit faulty	*Replace unit.*
	BCM faulty	*Replace after making sure that none of above parts is faulty.*

Clock System Diagnosis (If Equipped)

S7RW0A9304016

Condition	Possible cause	Correction / Reference Item
No displaying of clock	Circuit fuse blown	*Replace fuse and check for short circuit.*
	Wiring or grounding faulty	*Repair circuit.*
	Clock unit faulty	*Replace unit.*

Audio System Symptom Diagnosis (If Equipped)

S7RW0A9304017

Radio

NOTE

Electronic part / system with undiagnosed problem may cause electromagnetic interference. Electromagnetic interference condition may have poor radio reception. To test for presence of electromagnetic interference in part / system, perform the following procedures.

1. **Turn ignition switch to OFF.**
2. **Systematically disconnect the electronic part / system connector(s) one at a time.**
3. **Turn ignition switch to ON.**
4. **Check any improvement in radio reception.**

Condition	Possible cause	Correction / Reference Item
Poor radio reception	Out of service area (Poor location)	—
	Antenna faulty	*Replace antenna.*
	Electrical part / system faulty	*Repair or replace electrical part / system referring to above-mentioned NOTE.*
	Wiring or grounding faulty	*Repair circuit.*
	Radio assembly faulty	*Replace radio assembly.*
Radio does not operate and speaker does not sound	Circuit fuse(s) blown	*Replace fuse(s) and check for short circuit.*
	Wiring or grounding faulty	*Repair circuit.*
	Radio assembly faulty	*Replace radio assembly.*
Radio does not operate, but speaker sound	Wiring or grounding faulty	*Repair circuit.*
	Radio assembly faulty	*Replace radio assembly.*
Radio is operative, but all speakers does not sound	Wiring or grounding faulty	*Repair circuit.*
	Radio assembly faulty	*Replace radio assembly.*
Individual speaker is noisy or inoperative	Wiring or grounding faulty	*Repair circuit.*
	Speaker faulty	*Replace speaker.*
	Radio assembly faulty	*Replace radio assembly.*
Sound quality is poor	Out of service area (Poor location)	—
	Speaker installed incorrectly	*Install correctly.*
	Wiring or grounding faulty	*Repair circuit.*
	Speaker faulty	*Replace speaker.*
	Radio assembly faulty	*Replace radio assembly.*

CD Player

Condition	Possible cause	Correction / Reference Item
CD-ROM does not insert	Another CD-ROM already inserted	*Eject CD-ROM.*
	Circuit fuse blown	*Replace fuse and check for short circuit.*
	Wiring or grounding faulty	*Repair circuit.*
	Extraneous material come to be mixed CD player	*Clear extraneous material from CD player or replace radio assembly.*
	Radio assembly faulty	*Replace radio assembly.*
CD-ROM does not eject	Circuit fuse blown	*Replace fuse and check for short circuit.*
	Wiring or grounding faulty	*Repair circuit.*
	Extraneous material come to be mixed in CD player	*Clear extraneous material from CD player or replace radio assembly.*
	Radio assembly faulty	*Replace radio assembly.*
CD player does not load CD-ROM	CD-ROM faulty	—
	CD-ROM inserted with incorrect side up	*Insert correctly.*
	Temperature in cabin is too hot	—
	Water droplets form on internal lens	*Dry about 1 hour with power on.*
	Radio assembly faulty	*Replace radio assembly.*
Sound skips or is noisy	CD-ROM faulty	—
	Driving vibration	—
	Water droplets form on internal lens	*Dry about 1 hour with power on.*
	Radio assembly installed incorrectly	*Install correctly.*
	Radio assembly faulty	*Replace radio assembly.*

Condition	Possible cause	Correction / Reference Item
CD player is operative, but all speakers does not sound	Wiring or grounding faulty	*Repair circuit.*
	Radio assembly faulty	*Replace radio assembly.*
Individual speaker is noisy or inoperative	Wiring or grounding faulty	*Repair circuit.*
	Speaker faulty	*Replace speaker.*
	Radio assembly faulty	*Replace radio assembly.*
Sound quality or volume is poor	CD-ROM faulty	—
	Wiring or grounding faulty	*Repair circuit.*
	Speaker installed incorrectly	*Install correctly.*
	Speaker faulty	*Replace speaker.*

Auto Volume Control System

Condition	Possible cause	Correction / Reference Item
Sound volume does not vary according to changes of vehicle speed	Auto volume control system is “OFF” mode	*Select auto volume control.*
	Vehicle speed signal faulty	*Check vehicle speed signal referring to “Vehicle Speed Signal Inspection (For Audio Unit) (If Equipped)”.*
	Wiring or grounding faulty	*Repair circuit.*
	BCM faulty	*Check input and output signal of BCM referring to “Inspection of BCM and Its Circuits in Section 10B”.*
	Radio assembly faulty	*Replace radio assembly.*

Remote Audio Control Switch Symptom Diagnosis (If Equipped)

S7RW0A9304018

Condition	Possible cause	Correction / Reference Item
Audio system is operative, but remote control switch does not control audio system	Remote audio control switch faulty	*Check remote audio control switch referring to “Remote Audio Control Switch Inspection (If Equipped)”.*
	Contact coil faulty	*Replace contact coil.*
	Wiring or grounding faulty	*Repair circuit.*
	Radio assembly faulty	*Replace radio assembly.*

Navigation Symptom Diagnosis (If Equipped)

S7RW0A9304019

Condition	Possible cause	Correction / Reference Item
No displaying of navigation	Circuit fuse Blown	*Replace fuse and check for short circuit.*
	Wiring or grounding faulty	*Repair circuit.*
	Navigation unit faulty	*Replace unit.*

Repair Instructions

Ignition Switch Removal and Installation

S7RW0A9306001

Removal

1) Disconnect negative cable at battery.
2) Confirm that ignition key is removed.
3) Remove dash side trim (4) and steering column hole cover (1).
4) Turn steering wheel to remove steering column cover screws (3) and then remove steering column covers (2).

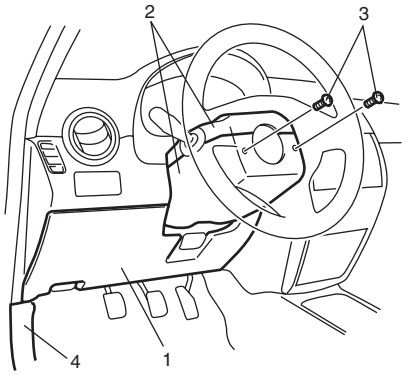

I7RW01930006-01

5) Remove steering column mounting nuts referring to Step 7) under “Removal” of “Steering Column Removal and Installation in Section 6B”.
6) Disconnect couplers (1) from ignition switch (2).
7) Remove ignition switch (2) from key cylinder (3).

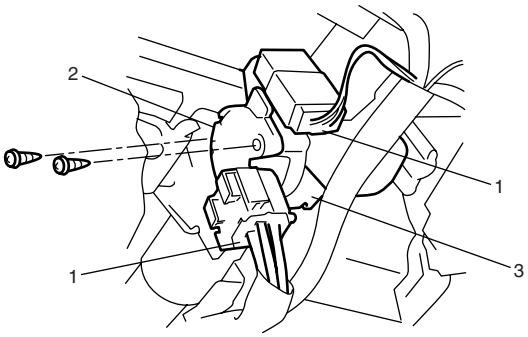

I4RS0A930008-01

Installation

Reverse removal procedure noting the following.
Tighten steering column mounting nuts referring to Step 2) under “Installation” of “Steering Column Removal and Installation in Section 6B”.

Ignition Switch Inspection

S7RW0A9306002

- Check for continuity between terminals at each switch position. If check result is not as specified, replace switch.

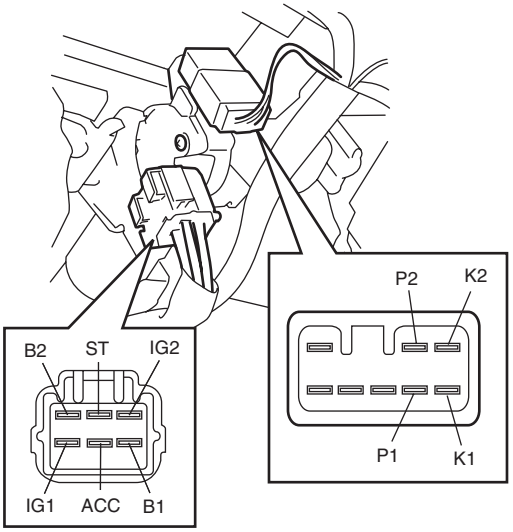

Key \ Position \ Terminal		B1	B2	ACC	IG1	IG2	ST	K1	K2
OUT	LOCK	○							
IN	LOCK	○							
IN	ACC	○		○					
IN	ON	○		○	○			○	○
IN	ON		○			○			
IN	START	○			○				
IN	START		○				○		

Ignition knob switch (with keyless start system only) \ Terminal	P1	P2
OFF (ignition knob switch released)		
ON (ignition knob switch pushsed)	○	○

I5RS0D930003-02

Combination Meter Removal and Installation

S7RW0A9306003

Removal

1) Disconnect negative (–) cable at battery.
2) Remove dash side trim (1) and steering column hole cover (2).

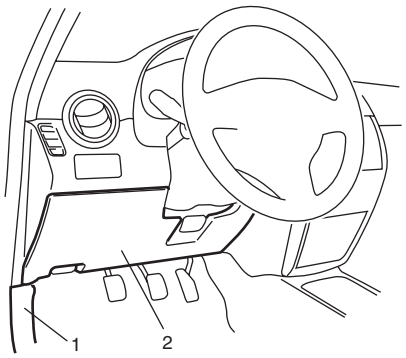

I7RW01930007-01

3) Remove center ventilation louver referring to Step 1) and 2) of “Information Display (Clock) Removal and Installation”.
4) Remove combination meter cluster panel (1) pulling it in arrow direction shown in figure.

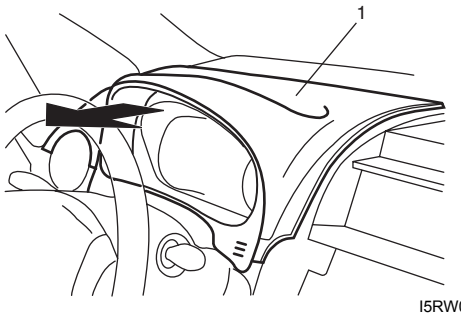

I5RW0A930009-01

5) Remove screws (1) fastening combination meter.
6) Remove combination meter (2) pulling it arrow direction as shown.

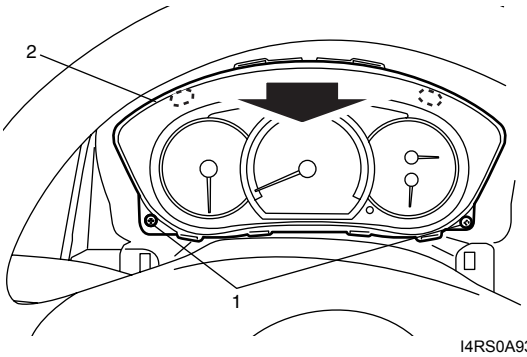

I4RS0A930012-02

Installation
Reverse removal procedure.

Fuel Level Sensor Removal and Installation

S7RW0A9306004

Removal
Remove fuel pump assembly referring to “Fuel Pump Assembly Removal and Installation in Section 1G”.

Installation
Install fuel pump assembly referring to “Fuel Pump Assembly Removal and Installation in Section 1G”.

Fuel Level Sensor Inspection

S7RW0A9306005

- Check that resistance between terminals “a” and “b” of fuel level sensor changes with change of float position.
- Check resistance between terminals “a” and “b” at each float position in the following.
  If the measured value is out of specification, replace.

Fuel level sensor specifications

Float Position		Resistance (Ω)
Full Upper “c”	**204 mm (8.03 in.)**	**40 ± 2**
Full Lower “d”	**32 mm (1.26 in.)**	**280 ± 3.3**

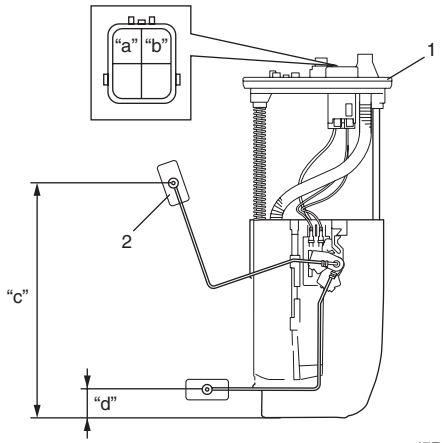

I7RW01930008-01

1. Fuel pump	2. Float

Oil Pressure Switch Removal and Installation

S7RW0A9306006

For removal and installation, refer to “Oil Pressure Check in Section 1E”.

Oil Pressure Switch Inspection

S7RW0A9306007

1) Disconnect oil pressure switch (1) lead wire.
2) Check for continuity between oil pressure switch terminal (2) and cylinder block (3) as shown.
   If check result is not as specified, replace oil pressure switch (1).

Oil pressure sensor specification
During engine running: No continuity
At engine stop: Continuity

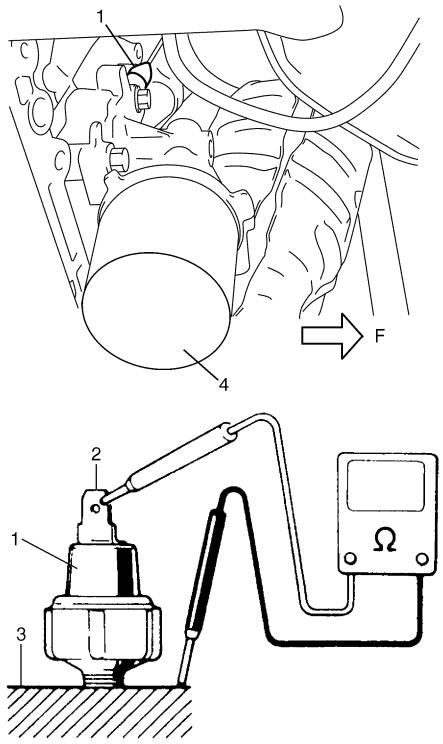

I3RM0A930009-01

4. Engine oil filter	F: Front

Engine Coolant Temperature (ECT) Sensor Inspection

S7RW0A9306008

Check engine coolant temperature sensor for resistance, refer to “Engine Coolant Temperature (ECT) Sensor Inspection in Section 1C”.

Brake Fluid Level Switch Inspection

S7RW0A9306009

Check for continuity between terminals of brake fluid level switch coupler (1). If found defective, replace switch.

Brake fluid level switch specification
OFF position (float up): No continuity
ON position (float down): Continuity

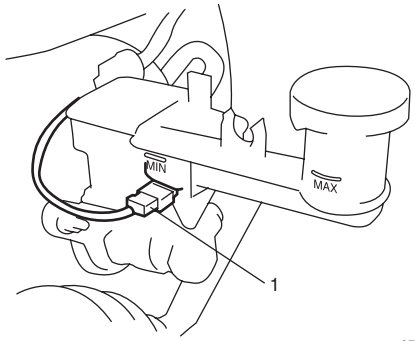

I5RW0A930011-01

Parking Brake Switch Inspection

S7RW0A9306010

Check for continuity between parking brake switch terminal and body ground as shown in figure. If found defective, replace switch.

Parking brake switch specification
OFF position (parking brake released): No continuity
ON position (parking brake lever pulled up): Continuity

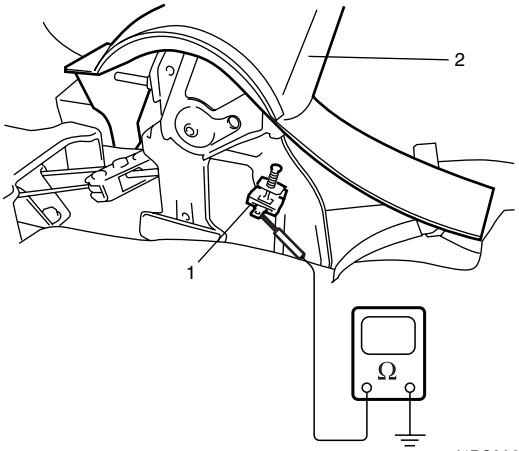

I4RS0A930014-01

1. Parking brake switch	2. Parking brake lever

Door Switch (Front / Rear Door) Inspection

S7RW0A9306011

Remove door switch from body and check switch for continuity. If found defective, replace switch.

Door switch (front / rear door) specification
OFF position (Door closed): No continuity
ON position (Door open): Continuity

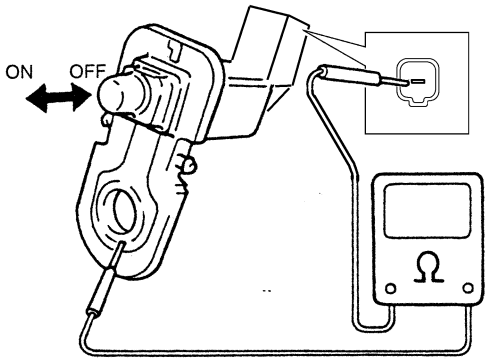

I3RH0A930004-01

Rear End Door Switch Inspection (Hatchback)

S7RW0A9306012

Check for continuity between terminal “a” and “b” shown in the following.
If check result is not as specified, replace switch.

Rear end door switch specification
Rear end door closed: No continuity
Rear end door opened: Continuity

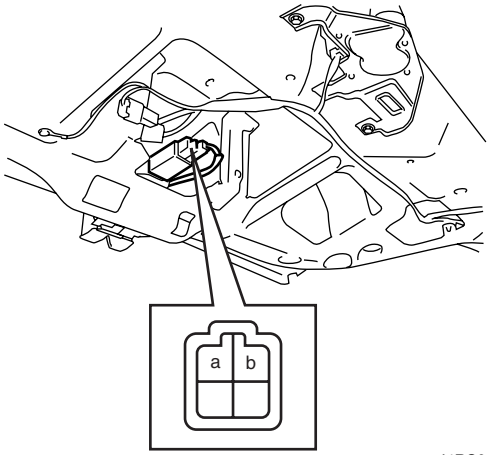

I4RS0A930015-01

Trunk Lid Switch Inspection (Sedan)

S7RW0A9306028

Check for continuity between trunk lid connector terminal (1) and body ground.
If check result is not as specified, replace switch.

Trunk lid switch specification
Trunk lid switch (2) is pushed: No continuity
Trunk lid switch (2) is free: Continuity

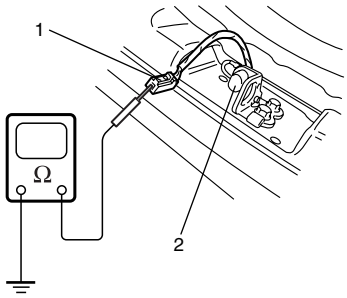

I2RH01920026-01

Outside Air Temperature Sensor Removal and Installation (If Equipped)

S7RW0A9306013

Removal

1) Disconnect negative (–) cable at battery.
2) Remove front bumper referring to “Front Bumper and Rear Bumper Components in Section 9K”.
3) Disconnect connector from outside air temperature sensor.
4) Remove outside air temperature sensor (1) from front bumper member.

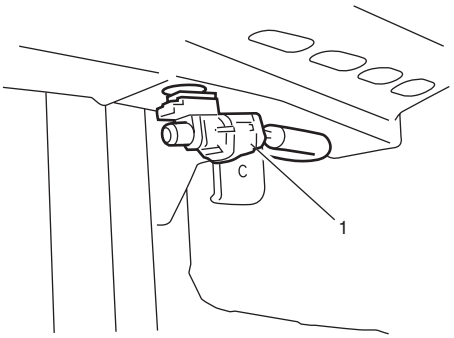

I5RW0A930012-01

Installation

Reverse removal procedure for installation.

Outside Air Temperature Sensor Inspection (If Equipped)

S7RW0A9306014

Measure resistance of outside air temperature sensor using an ohmmeter.
If resistance is out of specification, replace outside air temperature sensor.

Outside air temperature sensor resistance
1.61 kΩ – 1.79 kΩ at 25 °C (77 °F)

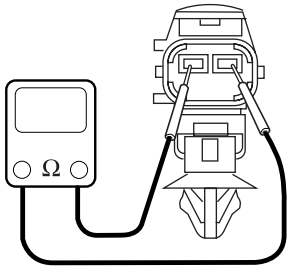

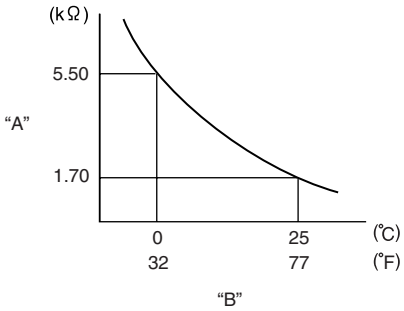

I4RS0A930017-01

“A”: Resistance	“B”: Temperature

Instrument Panel Removal and Installation

S7RW0A9306015

⚠ WARNING

Refer to “Air Bag Warning in Section 00” before starting service work.

Removal

1) Disconnect negative cable at battery.
2) Disable air bag system referring to “Disabling Air Bag System in Section 8B”.
3) Remove dash side trims (4) and steering column hole cover (1).
4) Turn steering wheel to remove steering column cover screws (3).
5) Remove steering column covers (2).

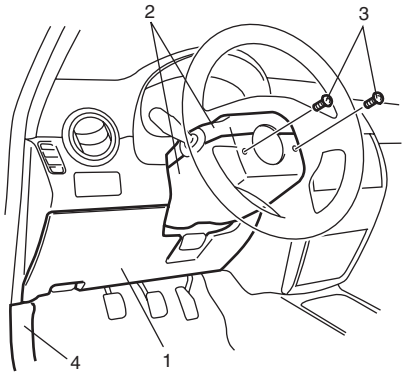

I7RW01930010-01

6) Remove glove box (1).
7) Remove hood latch release lever (2).

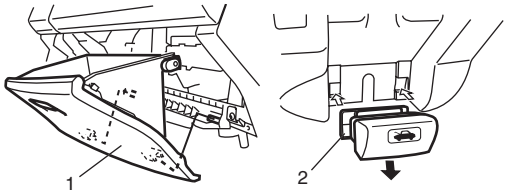

I4RS0B930008-01

8) Remove console box referring to “Console Box Components in Section 9H”.
9) Remove instrument panel center lower bracket bolts (1).

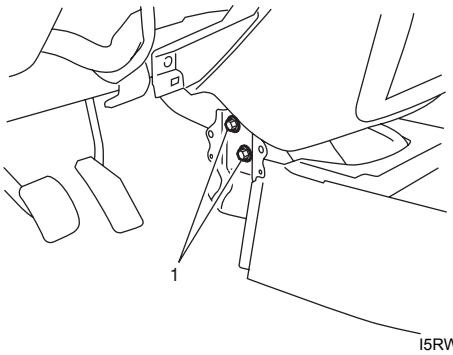

I5RW0A930014-01

10) Remove front pillar trims (1).

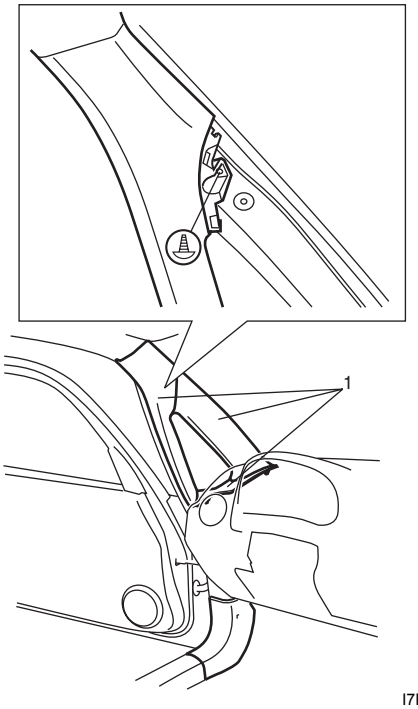

I7RW01930011-01

11) Disconnect instrument panel harness connectors, heater control cables and antenna cable for instrument panel removal.
12) Remove steering column assembly referring to “Steering Column Removal and Installation in Section 6B”.
13) Remove instrument panel ground wire.
14) Remove instrument panel mounting bolts (1).
15) Remove instrument panel (2) with steering support member (3) and instrument panel harness.

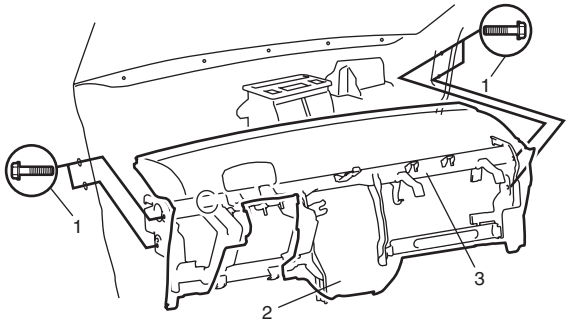

I5RW0A930016-01

Installation

Reverse removal procedure noting the following.

- When installing each part, be careful not to catch any cable or wiring harness.
- Tighten instrument panel mounting bolts to specified torque.

  Tightening torque
  Instrument panel mounting bolt (a): 23 N·m (2.3 kgf-m, 17.0 lb-ft)

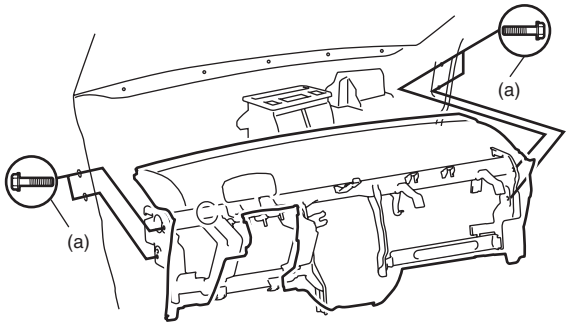

I5RW0A930017-01

- Install steering column assembly referring to “Steering Column Removal and Installation in Section 6B”.
- Enable air bag system referring to “Enabling Air Bag System in Section 8B”.

Information Display (Clock) Removal and Installation

S7RW0A9306016

Removal

1) Remove audio unit referring to “Audio Unit Removal and Installation (If Equipped)”.
2) Remove center ventilation louver (1) from instrument panel and then disconnect hazard switch connector.

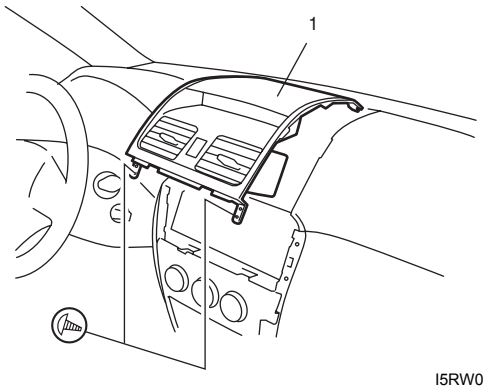

I5RW0A930018-01

3) Remove information display (clock) (1) from instrument panel (2) pulling it in arrow direction shown in figure.
4) Disconnect information display coupler.

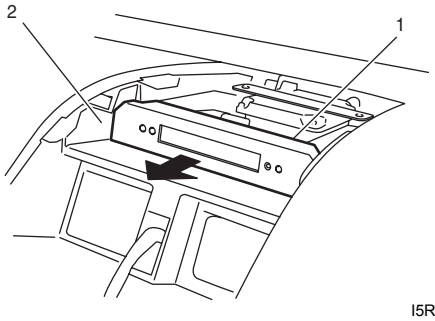

I5RW0A930019-01

Installation

Reverse removal procedure.

Audio Unit Removal and Installation (If Equipped)

S7RW0A9306017

Removal

1) Disconnect negative (–) cable at battery.
2) Remove instrument panel center garnish trims (1).

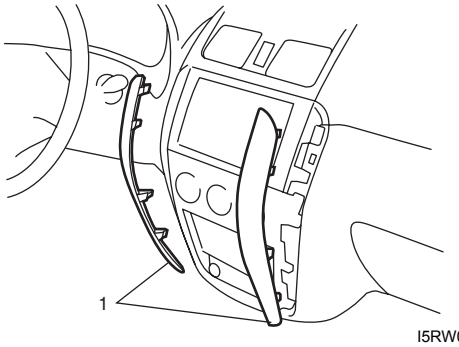

I5RW0A930020-03

3) Remove 4 mounting screws (1).
4) Disconnect electrical connectors from audio unit.
5) Remove audio unit (2) from instrument panel.

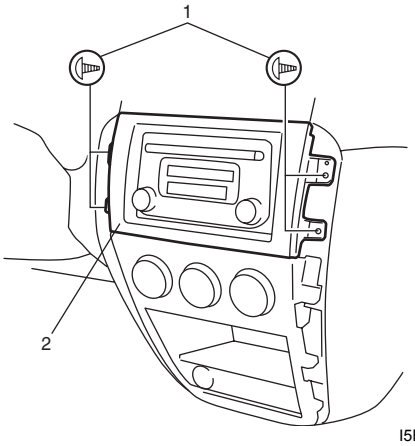

I5RW0A930021-01

Installation

Reverse removal procedure.

Front Speaker Removal and Installation (If Equipped)

S7RW0A9306018

Removal

1) Remove front door trim referring to Step 1) to 3) of “Front Door Glass Removal and Installation in Section 9E”.
2) Remove 3 front speaker mounting screws (1).
3) Remove front speaker (2) from front door panel (3).
4) Disconnect front speaker coupler from front speaker (2).

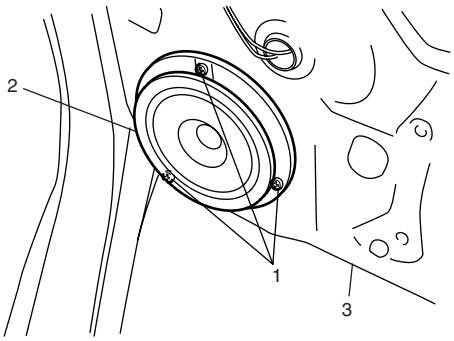

I4RS0A930027-01

Installation

Reverse removal procedure.

Rear Speaker Removal and Installation (If Equipped)

S7RW0A9306019

Removal

1) Remove rear door trim referring to Step 1) to 3) of “Rear Door Glass Removal and Installation in Section 9E”.
2) Remove 3 rear speaker mounting screws (1).
3) Remove rear speaker (2) from rear door panel (3).
4) Disconnect rear speaker coupler from rear speaker (2).

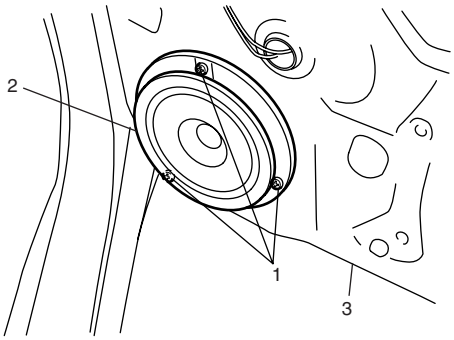

I4RS0A930027-01

Installation

Reverse removal procedure.

GPS Antenna Removal and Installation (If Equipped)

S7RW0A9306020

Removal

1) Remove combination meter cluster panel referring to step 1) to 4) of “Combination Meter Removal and Installation”.
2) Disconnect GPS antenna connector from navigation unit referring to “Audio Unit Removal and Installation (If Equipped)”.
3) Remove GPS antenna (1).

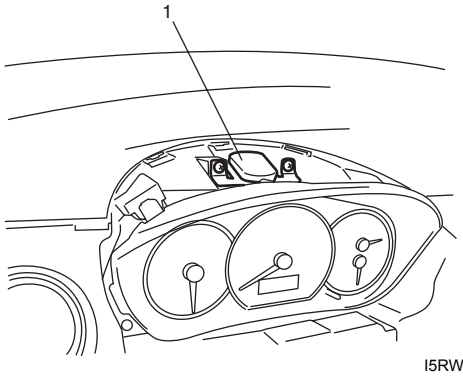

I5RW0A930022-01

Installation

Reverse removal procedure.

Horn Removal and Installation

S7RW0A9306021

Removal

1) Disconnect negative (–) cable at battery.
2) Remove front bumper referring to “Front Bumper and Rear Bumper Components in Section 9K”.
3) Disconnect horn connector (1).
4) Remove horn (2).

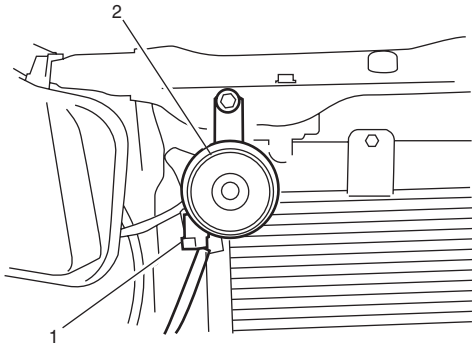

I7RW01930015-01

Installation

Reverse removal procedure for installation.

Horn Inspection

S7RW0A9306022

1) Disconnect negative (–) cable at battery.
2) Remove front bumper referring to “Front Bumper and Rear Bumper Components in Section 9K”.
3) Disconnect horn connector (1).
4) Connect battery positive (+) to terminal of horn connector (2) and negative (–) terminal to body ground.
   If horn is not sounding, replace horn.

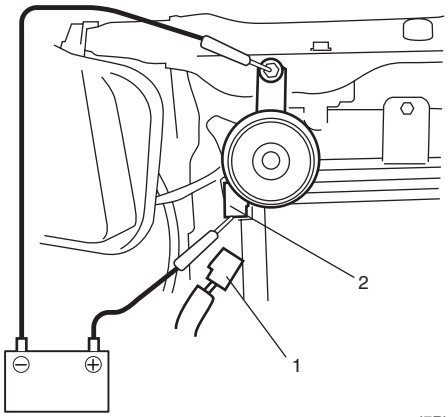

I7RW01930016-01

Horn Relay Inspection

S7RW0A9306023

1) Disconnect negative (–) cable at battery.
2) Remove junction block.
3) Remove horn relay (1) from junction block (2).

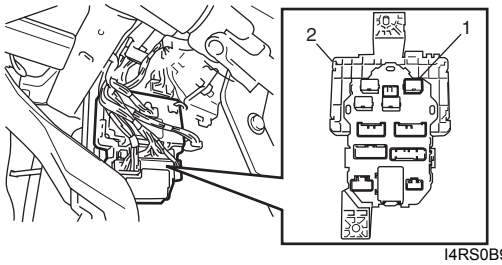

I4RS0B930018-01

4) Check that there is no continuity between terminals “c” and “d”. If there is continuity, replace relay.
5) Check that there is continuity between terminals “c” and “d” when a 12 V battery is connected to terminals “a” and “b”. If malfunction is found, replace it with a new one.

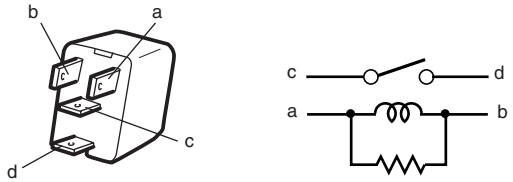

I3JA01920006-01

Antenna Base Removal and Installation (Hatchback)

S7RW0A9306024

Removal

1) Remove head lining referring to “Head Lining Removal and Installation in Section 9H”.
2) Remove antenna (1) from antenna base (2).
3) Disconnect antenna feeder from antenna base (2).
4) Remove antenna base (2) from vehicle.

Installation

Reverse removal procedure noting the following.

- Tighten antenna base mounting bolt to specified torque.

  Tightening torque
  Antenna base mounting bolt (a): 5.0 N·m (0.5 kgf-m, 4.0 lb-ft)

- Install head lining referring to “Head Lining Removal and Installation in Section 9H”.

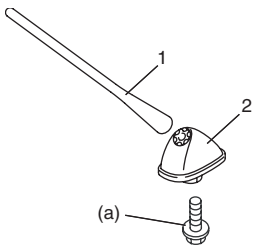

I7RW01930012-01

Remote Audio Control Switch Removal and Installation (If Equipped)

S7RW0A9306025

Remove

1) Remove steering wheel referring to “Steering Wheel Removal and Installation in Section 6B”.
2) Remove steering wheel cover (1) from steering wheel.

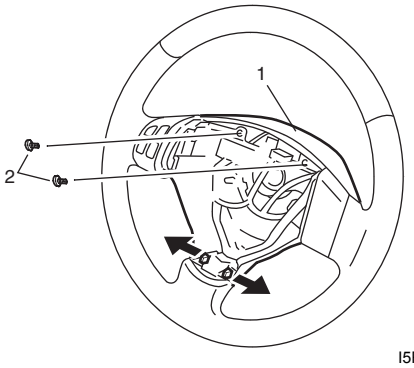

I5RW0A930025-02

2. Screw

3) Remove remote audio control switch (1) from steering wheel.

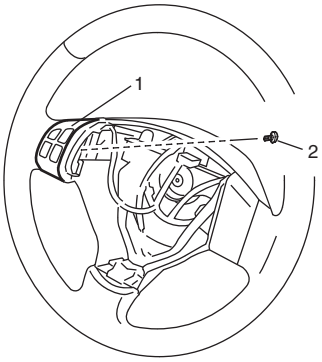

I5RW0A930026-02

2. Screw

Installation

Reverse removal procedure noting the following.

- Install steering wheel referring to “Steering Wheel Removal and Installation in Section 6B”.

Remote Audio Control Switch Inspection (If Equipped)

S7RW0A9306026

1) Remove driver air bag (inflator) module referring to "Driver Air Bag (Inflator) Module Removal and Installation in Section 8B".
2) Disconnect remote audio control switch connector from contact coil.
3) Check switch for resistance between "a" and "b" terminals under each condition below.
   If check result is not satisfactory, replace remote audio control switch.

   Remote audio control switch resistance
   All switches released (OFF): 5119 – 5223 Ω
   Switch "1" pushing on (ON): 55 – 57 Ω
   Switch "2" pushing on (ON): 129 – 133 Ω
   Switch "3" pushing on (ON): 238 – 244 Ω
   Switch "4" pushing on (ON): 416 – 426 Ω
   Switch "5" pushing on (ON): 743 – 759 Ω
   Switch "6" pushing on (ON): 1555 – 1587 Ω

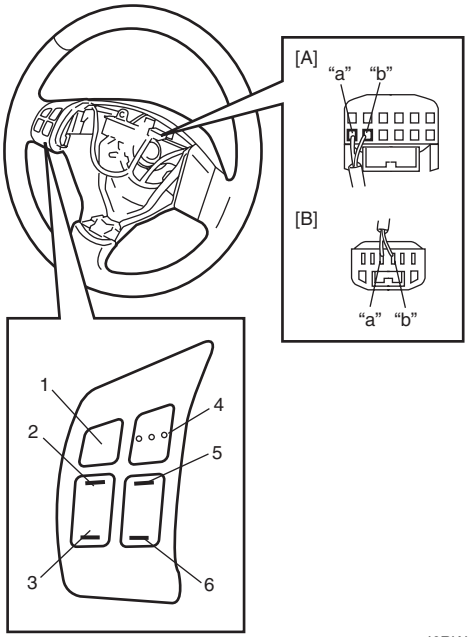

I6RW0D930004-01

[A]:	With cruise control system
[B]:	Without cruise control system

Vehicle Speed Signal Inspection (For Audio Unit) (If Equipped)

S7RW0A9306027

Check vehicle speed pulse output signal of BCM referring to "Reference waveform No.7" under "Inspection of BCM and Its Circuits in Section 10B".

Specifications

Tightening Torque Specifications

S7RW0A9307001

Fastening part	Tightening torque			Note
	N·m	kgf-m	lb-ft	
Instrument panel mounting bolt	23	2.3	17.0	☞
Antenna base mounting bolt	5.0	0.5	4.0	☞

NOTE

The specified tightening torque is also described in the following.
"Audio System Component Location"

Reference:
For the tightening torque of fastener not specified in this section, refer to "Fasteners Information in Section 0A".

Wipers / Washers

Diagnostic Information and Procedures

Front Wiper and Washer Symptom Diagnosis

S7RW0A9404001

Condition	Possible cause	Correction / Reference Item
Wiper malfunctions	Circuit fuse blown	*Replace fuse and check for short circuit.*
	Wiper motor faulty	*Check wiper motor referring to "Windshield Wiper Motor Inspection".*
	Combination switch (wiper switch) faulty	*Check wiper switch referring to "Windshield Wiper and Washer Switch Inspection".*
	Wiring or grounding faulty	*Repair circuit.*
Washer malfunctions	Washer hose or nozzle clogged	*Clean or repair clogged hose or nozzle.*
	Circuit fuse blown	*Replace fuse and check for short circuit.*
	Washer pump faulty	*Check washer pump referring to "Washer Pump Inspection".*
	Combination switch (washer switch) faulty	*Check washer switch referring to "Windshield Wiper and Washer Switch Inspection".*
	Wiring or grounding faulty	*Repair circuit.*

Rear Wiper and Washer Symptom Diagnosis

S7RW0A9404002

Condition	Possible cause	Correction / Reference Item
Wiper malfunctions ***NOTE*** • ***Use of SUZUKI scan tool makes it easy to check whether a faulty condition is on the input side or output side of BCM. For checking procedure, refer to "Diagnosis Using Output Test Function of SUZUKI Scan Tool" under "Scan Tool Data in Section 10B".*** • ***Check each part in the order from the top of the following list.***	Circuit fuse blown	*Replace fuse and check for short circuit.*
	Wiper motor faulty	*Check wiper motor referring to "Rear Wiper Motor Inspection".*
	Combination switch (wiper switch) faulty	*Check wiper switch referring to "Rear Wiper and Washer Switch Inspection".*
	Rear wiper relay faulty	*Check rear wiper relay referring to "Rear Wiper Relay Inspection".*
	Wiring or grounding faulty	*Repair circuit.*
	BCM faulty	*Replace after making sure that none of above parts is faulty.*
Washer malfunctions	Washer hose or nozzle clogged	*Clean or repair clogged hose or nozzle.*
	Circuit fuse blown	*Replace fuse and check for short circuit.*
	Washer pump faulty	*Check washer pump referring to "Washer Pump Inspection".*
	Combination switch (washer switch) faulty	*Check washer switch referring to "Rear Wiper and Washer Switch Inspection".*
	Wiring or grounding faulty	*Repair circuit.*

Repair Instructions

Wipers and Washers Components

S7RW0A9406001

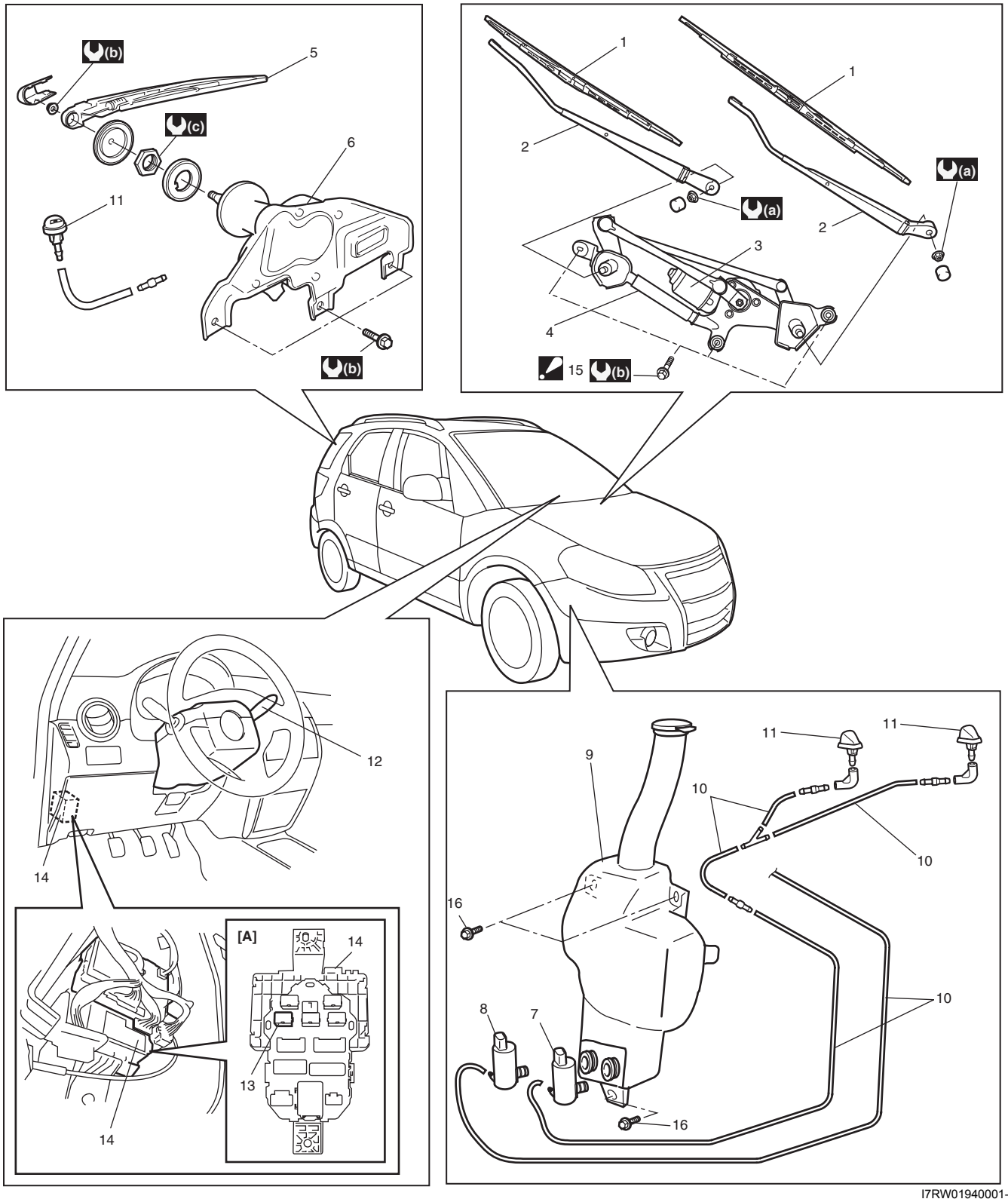

I7RW01940001-03

1. Windshield wiper blade	8. Washer pump for rear washer	15. Windshield wiper bolt :Tighten bolts in specified order.
2. Windshield wiper arm	9. Washer tank	16. Washer tank bolt
3. Windshield wiper motor	10. Washer hose	[A]: Junction block viewed from relay side
4. Windshield wiper link	11. Washer nozzle	(a) : 18 N·m (1.8 kgf-m, 13.0 lb-ft)

5. Rear wiper arm with blade assembly	12. Wiper switch	(b) : 8 N·m (0.8 kgf-m, 6.0 lb-ft)
6. Rear wiper motor	13. Rear wiper relay	(c) : 5 N·m (0.5 kgf-m, 4.0 lb-ft)
7. Washer pump for windshield washer	14. Junction block.	

Washer Tank and Washer Pump Removal and Installation

S7RW0A9406002

Removal

1) Disconnect negative (–) cable at battery.
2) Remove front bumper referring to “Front Bumper and Rear Bumper Components in Section 9K”.
3) Disconnect washer pump lead wire couplers and hoses.
4) Remove washer tank attaching bolts (4).
5) Remove washer tank (1).
6) Remove windshield washer pump (2) and rear washer pump (3) from washer tank (1).

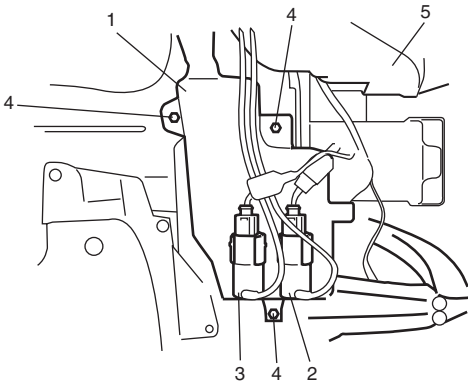

I7RW01940007-01

5. Right side headlight housing

Installation

Install washer tank and washer pump by reversing removal procedure, noting the following instructions.

- Connect washer pump connector(s) and hose securely.

Washer Pump Inspection

S7RW0A9406003

1) Connect battery positive (+) and negative (–) terminals to pump (+) and (–) terminals respectively.
2) Check windshield and rear washer pumps for operation.
   If pump does not operate, replace washer pump.

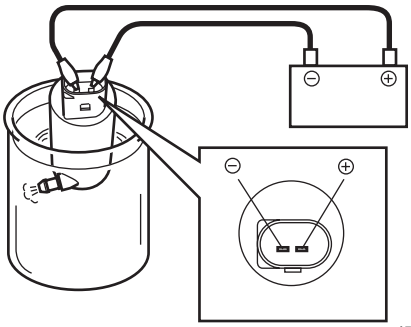

I5RW0A940004-01

Windshield Wiper Removal and Installation

S7RW0A9406004

Removal

1) Disconnect negative (–) cable at battery.
2) Remove wiper pivot caps (1) and wiper arm nuts (2), and remove windshield wiper arms with wiper blades (3).

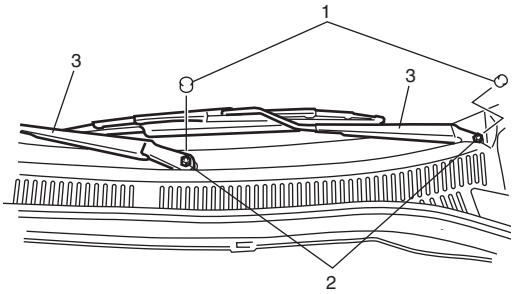

I4RS0B940003-03

3) Remove cowl top garnish referring to “Cowl Top and Front Lower Crossmember Components in Section 9K”.
4) Disconnect coupler from windshield wiper motor.
5) Remove bolts (1), and remove windshield wiper assembly (2).

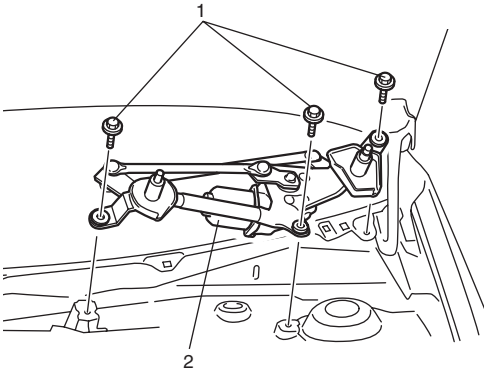

I5RW0A940005-02

Installation

1) Install windshield wiper assembly (1), and tighten bolts to specified torque in order of “i”, “ii” and “iii” indicated in figure.

   Tightening torque
   Windshield wiper bolt (a): 8 N·m (0.8 kgf-m, 6.0 lb-ft)

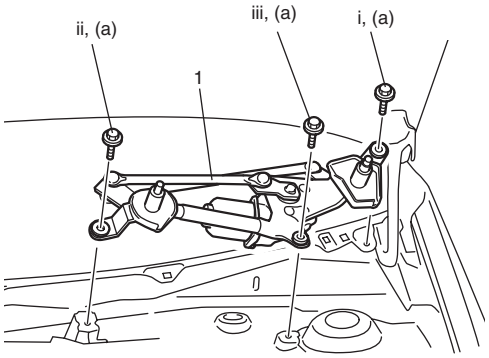

I5RW0A940006-02

2) Connect coupler to windshield wiper motor.
3) Install cowl top garnish referring to “Cowl Top and Front Lower Crossmember Components in Section 9K”.
4) Install windshield wiper arms with wiper blades (1) to specified position as shown in figure, and then tighten windshield wiper nuts to specified torque.

   Tightening torque
   Windshield wiper arm nut (a): 18 N·m (1.8 kgf-m, 13.0 lb-ft)

5) Install wiper pivot caps (2) to windshield wiper arm nuts.

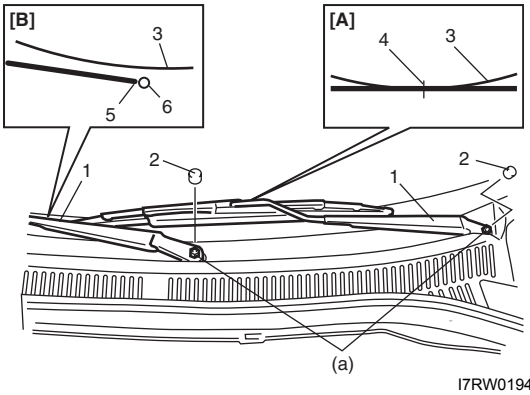

I7RW01940008-03

3. Ceramic line	6. Ceramic mark
4. Wiper blade center	[A]: Driver side
5. Wiper blade edge	[B]: Passenger side

6) Connect negative (–) cable to battery.

Windshield Wiper Motor Inspection

S7RW0A9406005

NOTE

Make sure that battery voltage is 12 V or more.

1) Make a mark (1) on windshield wiper motor (2) stop position as shown.

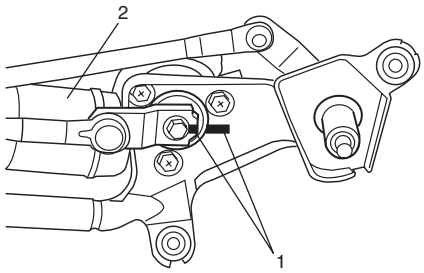

I5RW0A940007-01

2) Check windshield wiper motor for operation as follows
   - For motor operation in low speed
     a. Connect battery positive (+) terminal to terminal “1” and its negative (–) terminal to terminal “5”.
     b. Check if motor revolution speed is as specification. If check result is not as specified, replace motor.

     Specification
     41 – 49 r/min (rpm)

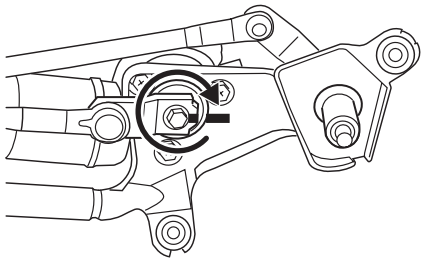

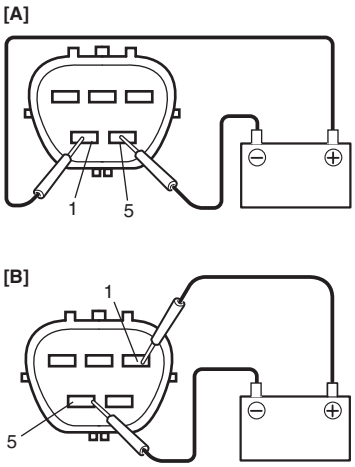

I5RW0A940008-01

[A]: LHD
[B]: RHD

- For motor operation in high speed
  a. Connect battery positive (+) terminal to “2” and its negative (–) terminal to terminal “5”.
  b. Check if motor revolution speed is as specification. If check result is not as specified, replace motor.

  Specification
  63 – 77 r/min (rpm)

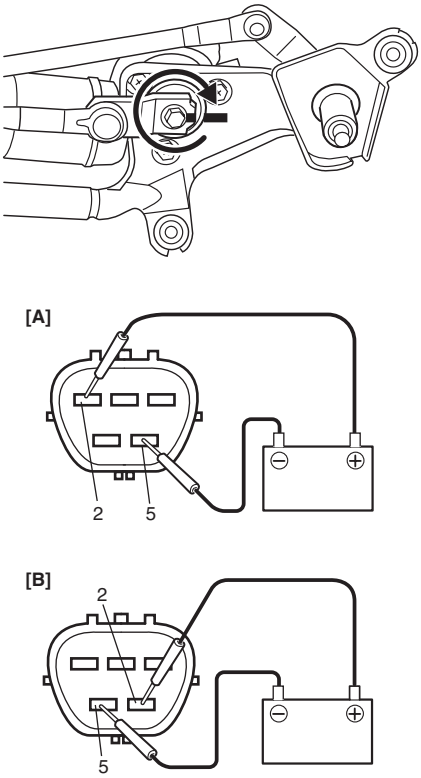

I5RW0A940009-01

[A]:	LHD
[B]:	RHD

- For automatic stop operation
  a. Connect battery positive (+) terminal to terminal “1” and its negative (–) terminal to terminal “5” and let the motor turn.
  b. Disconnect terminal “1” from battery positive (+) terminal, and let the motor stop.
  c. Connect terminals “1” and “3” with a jumper wire, and connect terminal “4” to battery positive (+) terminal.
  Observe the motor turns once again then stops at a specified position as shown.

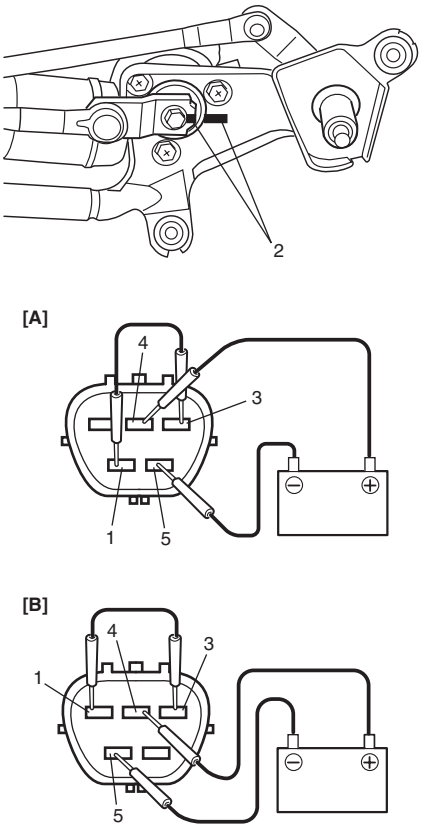

I5RW0A940010-01

[A]:	LHD
[B]:	RHD
2.	Mark

  d. Repeat Step a. to c. several times and check that the motor stops at the specified position every time.
  If check result is not satisfied, replace motor.

Rear Wiper Removal and Installation

S7RW0A9406006

Removal

1) Disconnect negative (–) cable at battery.
2) Remove arm cover (1), rear wiper arm nut (2), rear wiper arm with blade assembly (3), rear wiper pivot cap (4), rear wiper nut (5) and rear wiper seal (6).

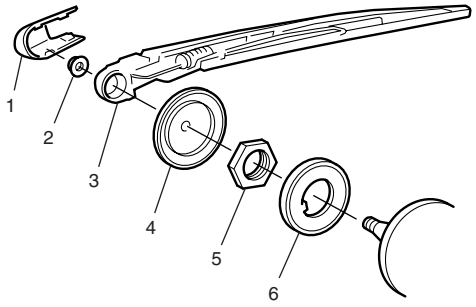

I4RS0A940013-01

3) Remove rear end door trim referring to “Rear End Door Lock Assembly Removal and Installation (Hatchback Model) in Section 9F”.
4) Disconnect coupler from rear wiper motor.
5) Remove rear wiper motor.

Installation

1) Install rear wiper motor (1) and tighten rear wiper motor mounting bolts to specified torque.

Tightening torque
Rear wiper motor mounting bolt (a): 8 N·m (0.8 kgf-m, 6.0 lb-ft)

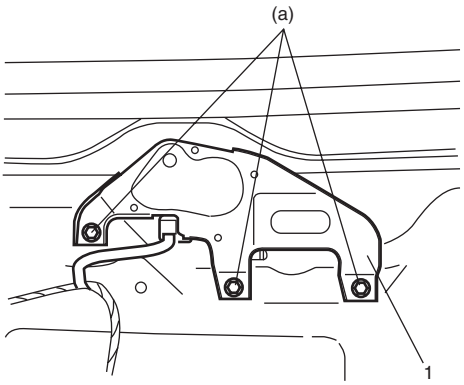

I5RW0A940011-01

2) Connect coupler to rear wiper motor
3) Install rear end door trim referring to “Rear End Door Lock Assembly Removal and Installation (Hatchback Model) in Section 9F”.
4) Install rear wiper seal (1), and tighten rear wiper nut to specified torque.

Tightening torque
Rear wiper nut (a): 5 N·m (0.5 kgf-m, 4.0 lb-ft)

5) Install rear wiper pivot cap (2).

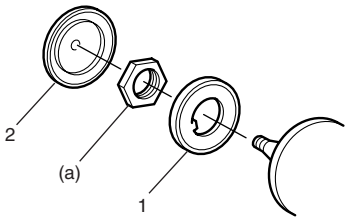

I4RS0A940015-01

6) Install rear wiper arm with blade assembly (1) to specified position as shown in figure.

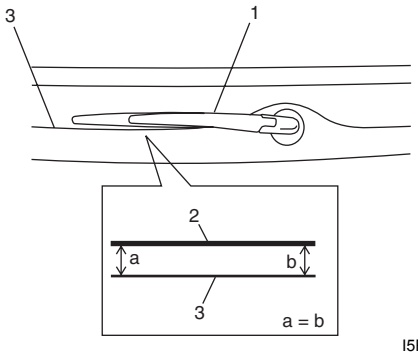

I5RW0A940012-01

2.	Rear wiper blade
3.	Ceramic line

7) Tighten rear wiper arm nut to specified torque, and then install arm cover (1).

Tightening torque
Rear wiper arm nut (a): 8 N·m (0.8 kgf-m, 6.0 lb-ft)

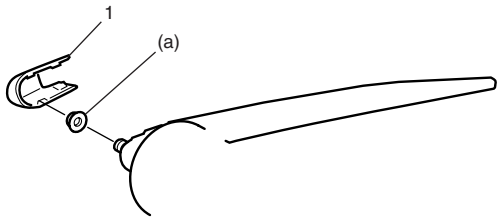

I4RS0A940017-01

8) Connect negative (–) cable to battery.

Rear Wiper Motor Inspection

S7RW0A9406007

NOTE

Make sure that battery voltage is 12 V or more.

1) Make a mark (1) on rear wiper motor (2) stop position as shown.

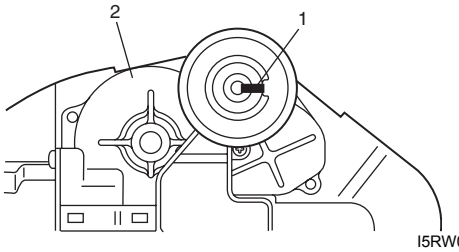

I5RW0A940013-02

2) Check rear wiper motor for operation as follows.
   - For motor operation
     a. Connect battery positive terminal to terminal “1” and its negative terminal to terminal “2”.
     b. Check if motor reciprocation speed is as specification. If check result is not as specified, replace motor.

     Specification
     35 – 45 r/min (rpm)

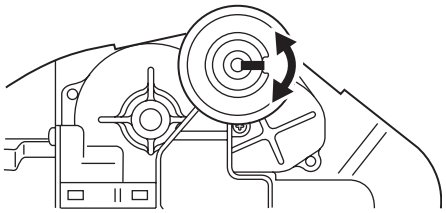

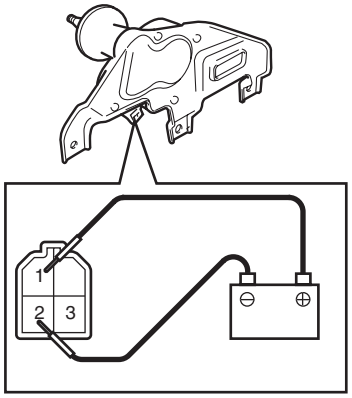

I5RW0A940014-01

   - For automatic stop operation
     a. Connect battery positive (+) terminal to terminal “1” and its negative (–) terminal to terminal “2” and let the motor turn.
     b. Disconnect terminal “2” from battery negative (–) terminal and let the motor stop.
     c. Observe the motor (4) turns once again then stops at a specified position as shown.

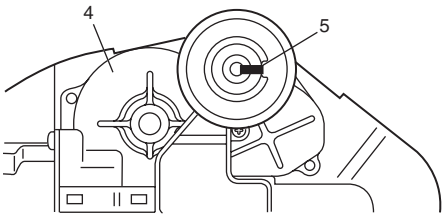

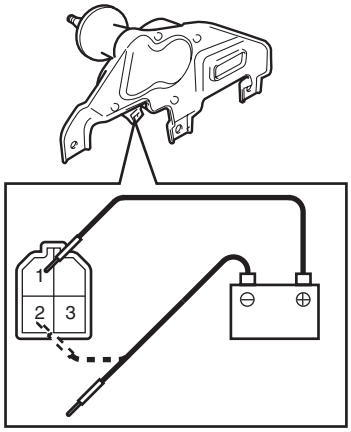

I5RW0A940015-02

5. Mark

     d. Repeat Step a. to c. several times and check that the motor stops at the specified position every time.
     If check result is not satisfied, replace motor.

Windshield Wiper and Washer Switch Removal and Installation

S7RW0A9406008

Removal

1) Disconnect negative (–) cable at battery.
2) Remove steering column hole cover (1).
3) Remove steering column covers (2).
   Turn steering wheel to access steering column cover rear end screws (3).

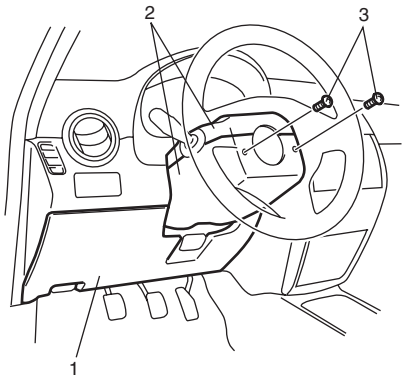

I5RW0A940016-01

4) (Immobilizer model)
   Remove immobilizer control module referring to “ICM Removal and Installation in Section 10C”.
5) Remove windshield wiper and washer switch (1) from combination switch assembly (2) and disconnect its coupler (3).

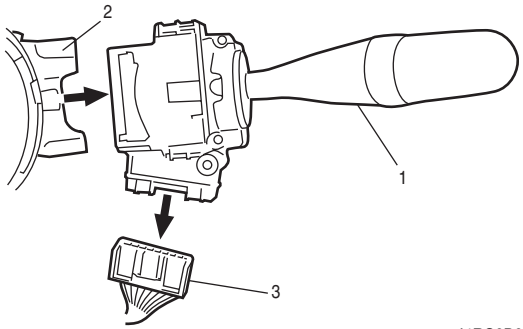

I4RS0B940008-01

Installation

Reverse removal procedure.

Windshield Wiper and Washer Switch Inspection

S7RW0A9406009

Windshield Wiper and Washer Switch

Check for continuity between terminals at each switch position. If check result is not as specified, replace switch.

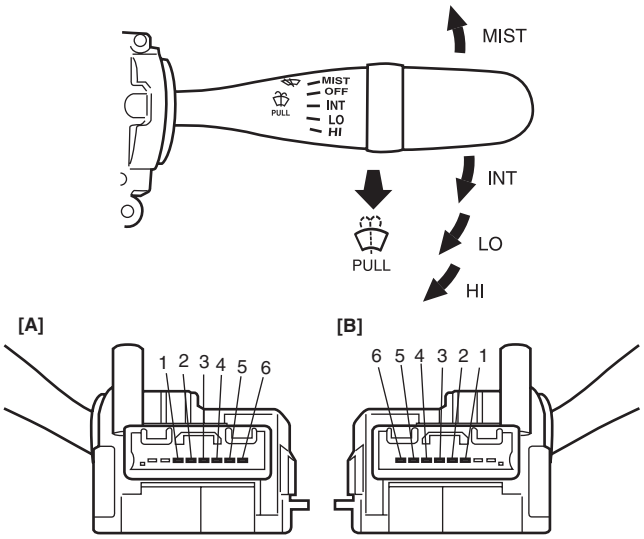

[D] \ [C]	6	5	4	3
OFF			○	○
INT			○	○
LO		○	○	
HI	○	○		
MIST		○	○	

[E] \ [C]	1	2
ON	○	○
OFF		

I5JB0D940001-01

[A]:	RHD without rear fog light
[B]:	Other than RHD without rear fog light
[C]:	Terminal
[D]:	Wiper switch
[E]:	Washer switch

Intermittent Wiper Relay Circuit

1) Turn the windshield wiper switch to “INT” position.
2) Connect battery positive (+) terminal to terminal “5” and its negative (–) terminal to terminal “2”.
3) Connect voltmeter positive lead to terminal “4” and its negative lead to terminal “2”.
4) Check that the voltmeter indicates the battery voltage (10 – 14 V).
5) Connect terminal “3” and terminal “5” by a jumper wire.

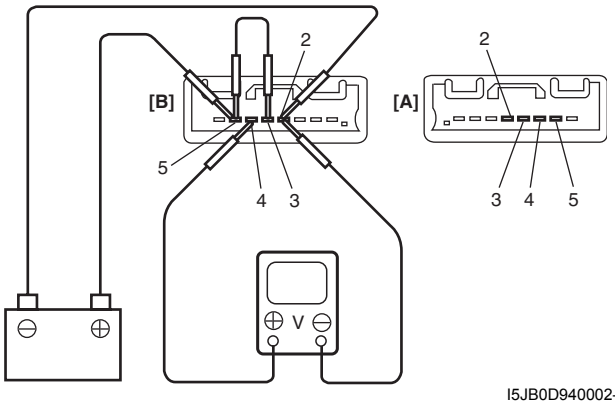

I5JB0D940002-02

[A]:	RHD without rear fog light
[B]:	Other than RHD without rear fog light

6) Disconnect end of the jumper wire from terminal “5”.
7) Connect disconnected jumper wire end to terminal “2”, then check that voltage between terminal “4” and terminal “2” changes as shown.
If check result is not satisfied, replace switch.

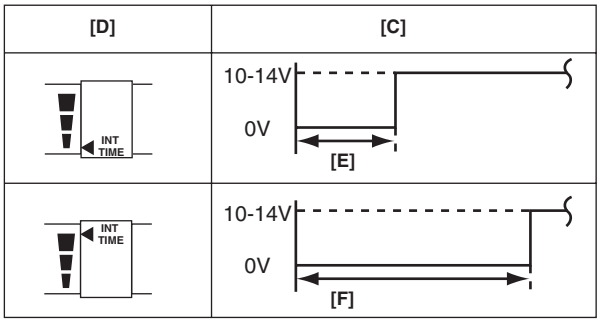

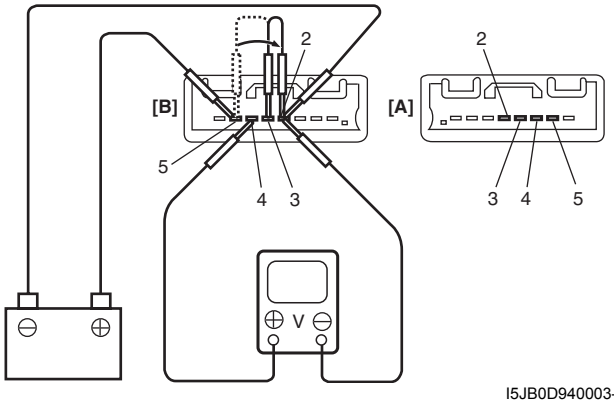

I5JB0D940003-02

[A]:	RHD without rear fog light
[B]:	Other than RHD without rear fog light
[C]:	Voltage
[D]:	INT time control switch position
[E]:	1.6 ± 1 sec.
[F]:	10.7 ± 5 sec.

Washer Linked Circuit

1) Make sure that front wiper switch is at “OFF” position.
2) Connect battery positive (+) terminal to terminal “5” and its negative (–) terminal to terminal “2”.
3) Connect voltmeter positive lead to terminal “4” and its negative lead to terminal “2”.
4) When front washer switch is ON, check that voltage changes as shown in figure.
If check result is not satisfied, replace switch.

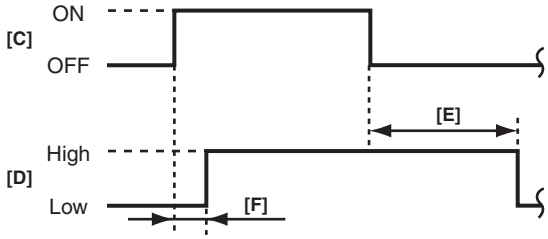

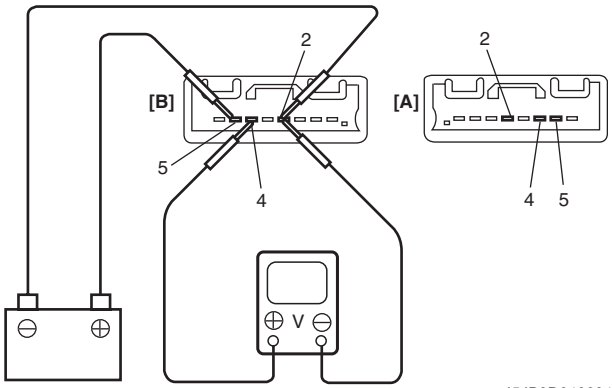

I5JB0D940004-02

[A]:	RHD without rear fog light
[B]:	Other than RHD without rear fog light
[C]:	Wiper switch
[D]:	Voltage
[E]:	Approx. 2.2 sec.
[F]:	Approx 0.3 se.

Rear Wiper and Washer Switch Removal and Installation

S7RW0A9406010

For removal and installation, refer to “Windshield Wiper and Washer Switch Removal and Installation”.

Rear Wiper and Washer Switch Inspection

S7RW0A9406011

Check for continuity between terminals at each switch position. If check result is not as specified, replace switch.

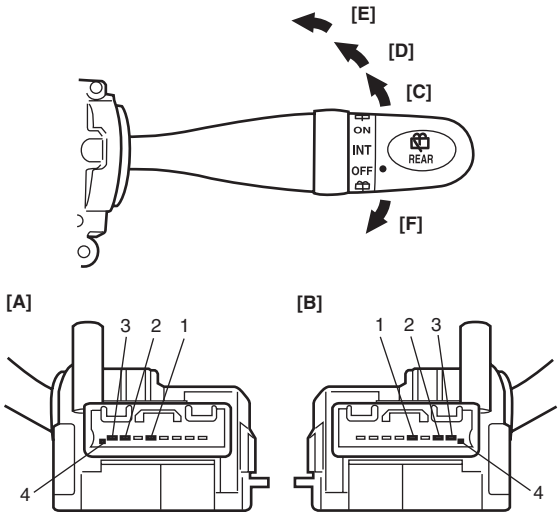

	1	2	3	4
OFF				
[C]	○	—	—	○
[D]	○	—	○	
[E]	○	○	○	
[F]	○	○		

I5JB0D940005-01

[A]:	RHD without rear fog light
[B]:	Other than RHD without rear fog light

Rear Wiper Relay Removal and Installation

S7RW0A9406012

Removal

1) Disconnect negative (–) cable at battery.
2) Remove junction block (1).
3) Remove rear wiper relay (2) from junction block.

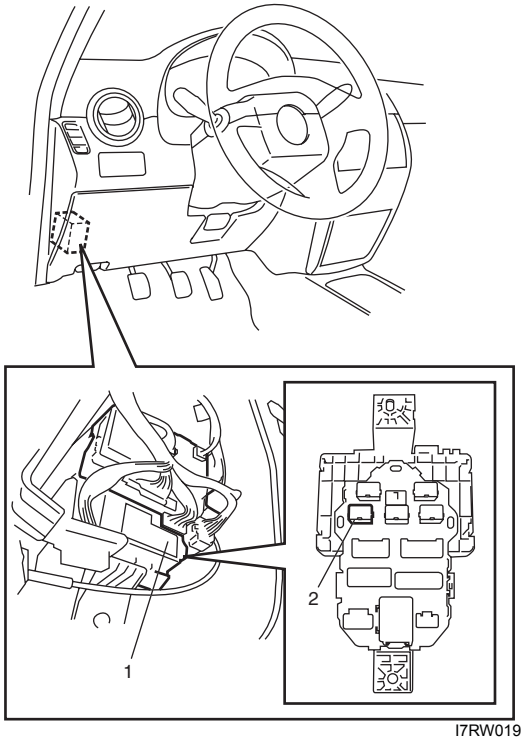

I7RW01940006-01

Installation

Reverse removal procedure for installation.

Rear Wiper Relay Inspection

S7RW0A9406013

1) Check that there is no continuity between terminal “3” and “4”. If there is continuity, replace relay.
2) Connect battery positive (+) terminal to terminal “2” of relay.
3) Connect battery negative (–) terminal to terminal “1” of relay.
4) Check continuity between terminal “3” and “4”. If there is no continuity when relay is connected to the battery, replace relay.

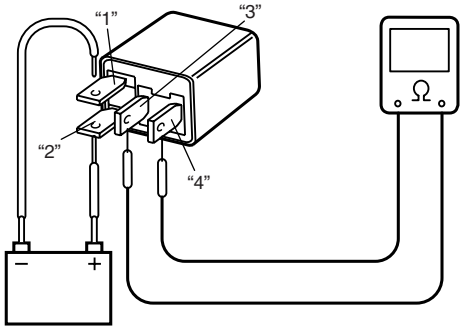

I4RS0A940028-01

Specifications

Tightening Torque Specifications

S7RW0A9407001

Fastening part	Tightening torque			Note
	N·m	kgf-m	lb-ft	
Windshield wiper bolt	8	0.8	6.0	☞
Windshield wiper arm nut	18	1.8	13.0	☞
Rear wiper motor mounting bolt	8	0.8	6.0	☞
Rear wiper nut	5	0.5	4.0	☞
Rear wiper arm nut	8	0.8	6.0	☞

NOTE

The specified tightening torque is also described in the following.
“Wipers and Washers Components”

Reference:
For the tightening torque of fastener not specified in this section, refer to “Fasteners Information in Section 0A”.

Glass / Windows / Mirrors

Precautions

Precautions for Power Window Service (Pinching Prevention Function Model)

S7RW0A9500001

⚠ WARNING

When checking the pinching prevention function, never attempt intentionally to have your hand, arm or any other part of the body pinched. Also, use full care not to have your body caught.

- Do not drop the power window regulator (motor) or expose it to a strong impact in any other way.
- Do not operate the motor unless the power window regulator (motor) is installed and ready to operate door glass.
- If any peripheral part has bean damaged, replace regulator (motor) as well depending on the damage condition.
- After replacing or disconnecting the driver side power window regulator (motor), power window main switch, battery and/or fuse, make sure to execute the initial setting, (to have the door glass closed position learned) refer to “Power Window Main Switch Initialization (Pinching Prevention Function Model)”.

General Description

Rear End Door Window / Back Window Defogger System Description

S7RW0A9501001

The rear end door window/back window defogger is controlled by BCM. For the BCM description refer to “BCM General Description in Section 10B”.

Schematic and Routing Diagram

Power Window Circuit Diagram (Pinching Prevention Function Model)

S7RW0A9502001

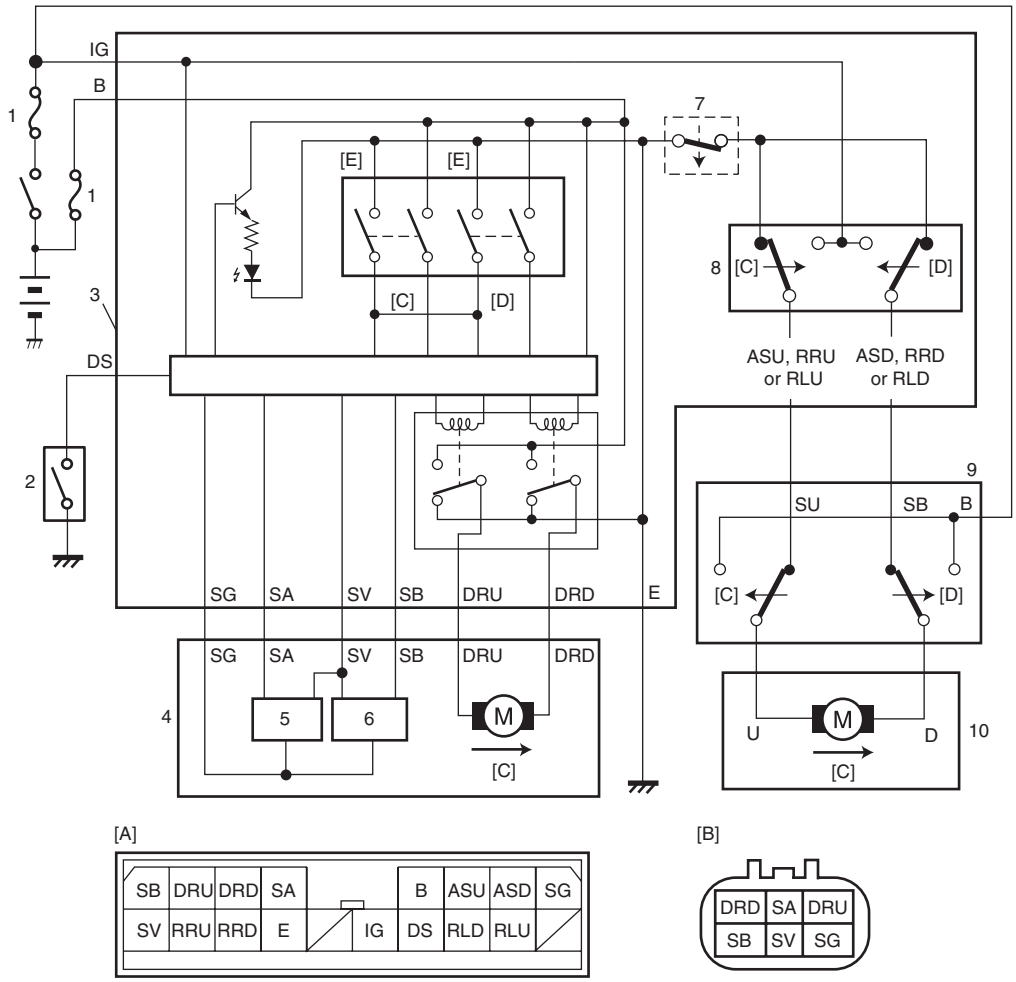

I6RW0D950001-01

[A]: Power window main switch connector (viewed from harness side)	1. Fuse	6. Pulse sensor 2
[B]: Driver side power window motor connector (viewed from harness side)	2. Driver side door switch	7. Window lock switch
[C]: UP	3. Power window main switch	8. Sub switch (passenger side, rear left side or rear light side)
[D]: DOWN	4. Driver side power window motor	9. Power window sub switch (passenger side, rear left side or rear light side)
[E]: AUTO	5. Pulse sensor 1	10. Power window motor (other than driver side)

Diagnostic Information and Procedures

Rear End Door Window / Back Window Defogger Symptom Diagnosis

S7RW0A9504001

NOTE

- **Use of SUZUKI scan tool makes it easy to check whether a faulty condition is on the input side or output side of BCM. For checking procedure, refer to "Diagnosis Using Output Test Function of SUZUKI Scan Tool" under "Scan Tool Data in Section 10B".**
- **Check each part in the order from the top of the following list.**

Condition	Possible cause	Correction / Reference Item
Rear end door window/ back window defogger does not operate	Circuit fuse blown	*Replace fuse and check for short circuit.*
	Rear end door window/back window defogger switch faulty	*Check rear end door window/back window defogger switch referring to "Rear End Door Window / Back Window Defogger Switch Inspection".*
	Rear end door window/back window defogger relay faulty	*Check rear end door window/back window defogger relay referring to "Rear End Door Window / Back Window Defogger Relay Inspection".*
	Defogger wire faulty	*Check defogger wire referring to "Rear End Door Window / Back Window Defogger Wire Inspection".*
	Wiring or grounding faulty	*Repair circuit.*
	BCM faulty	*Replace after making sure that none of above parts is faulty.*

Power Window Control System Symptom Diagnosis

S7RW0A9504002

Condition	Possible cause	Correction / Reference Item
All power windows do not operate	Circuit fuse blown	*Replace fuse and check for short circuit.*
	Power window main switch faulty	*Check power window main switch referring to "Power Window Main Switch Inspection".*
	Ignition switch faulty	*Check ignition switch referring to "Ignition Switch Inspection in Section 9C".*
	Wiring or grounding faulty	*Repair circuit.*
Only one power window does not operate	Power window main switch faulty	*Check power window main switch referring to "Power Window Main Switch Inspection".*
	Power window sub switch faulty	*Check power window sub switch referring to "Power Window Sub Switch Inspection".*
	Wiring and/or coupler faulty	*Check wiring and/or coupler.*
	Power window regulator faulty	*Check window regulator.*
	Power window motor faulty	*Check power window motor.*
	Wiring or grounding faulty	*Repair circuit.*
Driver side door glass fails to perform auto-up / auto-down function (Pinching Prevention Function Model)	Power window main switch faulty	*Check power window main switch referring to "Power Window Main Switch Inspection".*
	Power window motor faulty	*Check power window motor referring to "Pulse Sensor and Its Circuit Inspection (Pinching Prevention Function Model)".*
	Wiring or grounding faulty	*Repair circuit.*
Driver side door glass fails to lower back even when a foreign matter is pinched (Pinching Prevention Function Model)	Power window main switch has not been initialized	*Execute the initial setting of power window main switch referring to "Power Window Main Switch Initialization (Pinching Prevention Function Model)".*
	Power window main switch faulty	*Check power window main switch referring to "Power Window Main Switch Inspection".*
	Power window motor faulty	*Check power window motor referring to "Pulse Sensor and Its Circuit Inspection (Pinching Prevention Function Model)".*

Condition	Possible cause	Correction / Reference Item
Driver side door glass lowers back while using auto-up function although nothing is pinched between door glass and frame (Pinching Prevention Function Model)	Foreign matter is attached to door glass, glass run or sash etc.	*Remove the foreign matter.*
	Glass run and/or door sash faulty	*Repair or replace.*
	Power window main switch has not been initialized	*Execute the initial setting of power window main switch referring to "Power Window Main Switch Initialization (Pinching Prevention Function Model)".*
	Power window main switch faulty	*Check power window main switch referring to "Power Window Main Switch Inspection".*
	Power window motor faulty	*Check power window motor referring to "Pulse Sensor and Its Circuit Inspection (Pinching Prevention Function Model)".*

Inspection of Pinching Prevention Function (Pinching Prevention Function Model)

S7RW0A9504004

1) Open driver side door glass fully.
2) Hold a hummer so that its handle (wooden) (1) is placed as shown.

⚠ WARNING

Never attempt to have your hand, arm or any other part of the body punched. Also, use full care not to have your body caught during inspection.

⚠ CAUTION

If a side visor is installed, be careful so that hammer handle does not contact the visor. A hammer can be held from inside of the vehicle.

3) Use auto-up function of power window main switch.
4) Check that door glass lowers back automatically to specified position "a" before hammer handle is caught. If there is any faulty condition, referring to "Power Window Control System Symptom Diagnosis".

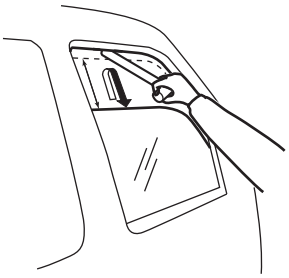

I6RW0D950006-01

"a". Approx. 220 mm (8.66 in.)

Power Door Mirror Control System Symptom Diagnosis

S7RW0A9504003

Condition	Possible cause	Correction / Reference Item
All power mirrors do not operate	Circuit fuse blown	*Replace fuse and check for short circuit.*
	Power door mirror switch faulty	*Check power door mirror switch referring to "Power Door Mirror Switch Inspection".*
	Wiring or grounding faulty	*Repair circuit.*
One power mirror does not operate	Power door mirror switch faulty	*Check power door mirror switch referring to "Power Door Mirror Switch Inspection".*
	Power door mirror actuator faulty	*Check actuator refraining to "Power Door Mirror Actuator Inspection".*
	Wiring or grounding faulty	*Repair circuit.*

Door Mirror Heater Symptom Diagnosis (If Equipped)

S7RW0A9504005

NOTE

- **Use of SUZUKI scan tool makes it easy to check whether a faulty condition is on the input side or output side of BCM. For checking procedure, refer to "Diagnosis Using Output Test Function of SUZUKI Scan Tool" under "Scan Tool Data in Section 10B".**
- **Check each part in the order from the top of the following list.**

Condition	Possible cause	Correction / Reference Item
All door mirror heaters does not operate	Circuit fuse blown	*Replace fuse and check for short circuit.*
	Rear end door window / back window defogger switch faulty	*Check rear end door window / back window defogger switch referring to "Rear End Door Window / Back Window Defogger Switch Inspection".*
	Rear end door window / back window defogger relay faulty	*Check rear end door window / back window defogger relay referring to "Rear End Door Window / Back Window Defogger Relay Inspection".*
	Wiring or grounding faulty	*Repair circuit.*
	BCM faulty	*Replace after making sure that none of above parts is faulty.*
Only one door mirror heater does not operate	Door mirror heater faulty	*Check door mirror heater refiring to "Door Mirror Heater Inspection (If Equipped)".*
	Wiring or grounding faulty	*Repair circuit.*

Repair Instructions

Windshield Components

S7RW0A9506001

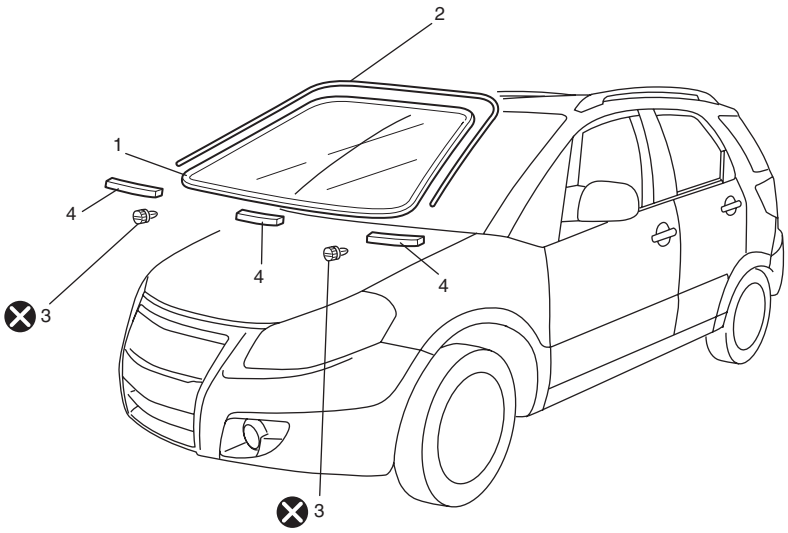

I5RW0A950001-02

1. Windshield glass	3. Windshield glass stopper	⊗ : Do not reuse.
2. Windshield molding	4. Spacer	

Windshield Removal and Installation

S7RW0A9506002

Preparation

The windshield is installed by using a special type of adhesive (that is, one component urethane adhesive used with primer). For the windshield replacement, it is important to use an adhesive which provides sufficient adhesion strength and follow the proper procedure.

⚠ CAUTION

- **Described is the glass replacement by using 3 types of primers and 1 type of adhesive made by YOKOHAMA (one component urethane adhesive to be used with primer in combination). When using primer and adhesive made by other manufacturers, be sure to refer to handling instructions supplied with them. Negligence in following such procedure or misuse of the adhesive in any way hinders its inherent adhesive property. Therefore, before the work, make sure to read carefully the instruction and description given by the maker of the adhesive to be used and be sure to follow the procedure and observe each precaution throughout the work.**
- **Should coated surface be scratched or otherwise damaged, be sure to repair damaged part, or corrosion may start from there.**

Use the specific adhesive which has the following property.

Glass adhesive shearing strength
40 kg/cm^2 (569 lb/in^2) or more

Adhesive materials and tools required for removal and installation.

- One component urethane adhesive and primers used in combination (For one sheet of windshield).
  - Adhesive (470 g (15.7 oz.))
  - Primer for glass (30 g (1.0 oz.))
  - Primer for body (30 g (1.0 oz.))
  - Primer for molding (30 g (1.0 oz.))
- Eyeleteer
- Piano string
- Windshield knife
- Brush for primer application (2 pcs)
- Knife
- Rubber sucker grip
- Sealant gun (for filling adhesive)
- Putty spatula (for correcting adhered parts)

Removal

1) Clean both inside and outside of glass and around it.
2) Remove wiper arms and cowl top garnish.
3) Using tape, cover body surface around glass to prevent any damage.
4) Remove rear view mirror, sun visor and front pillar trims (right & left).
5) If necessary, remove instrument panel. Refer to “Instrument Panel Removal and Installation in Section 9C”.
6) If necessary, remove head lining. Refer to “Head Lining Removal and Installation in Section 9H”.
7) Remove (or cut) windshield molding.
8) Drill hole with eyeleteer (1) through adhesive and let piano string through it.

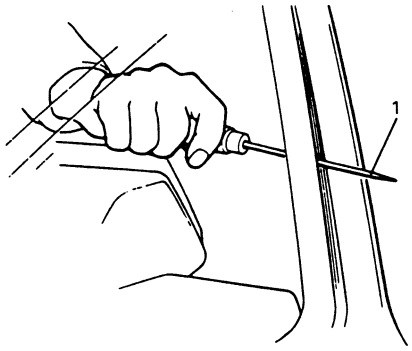

I2RH01950040-01

9) Cut adhesive all around windshield (1) with piano string (2). When using tool, windshield knife (3), to cut adhesive, be careful not to cause damage to windshield. Use wire to cut adhesive along lower part of windshield.

NOTE

Use piano string (2) as close to glass as possible so as to prevent damage to body and instrument panel.

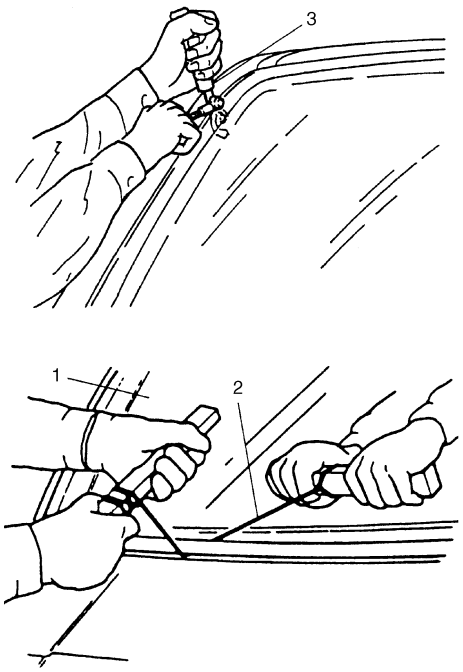

I3RH0A950006-01

10) Using knife (1), smoothen adhesive (2) remaining on body side (3) so that it is 1 – 2 mm (0.040 – 0.078 in.) thick all around.

NOTE

Before using knife (1), clean it with alcohol or the like to remove oil from it.

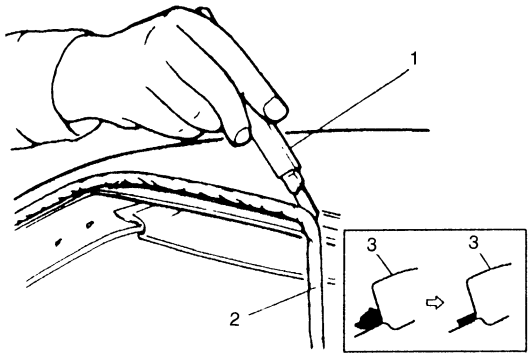

I2RH01950042-01

11) When reusing windshield, remove the adhesive (1) from it, using care not to damage primer coated surface (2).

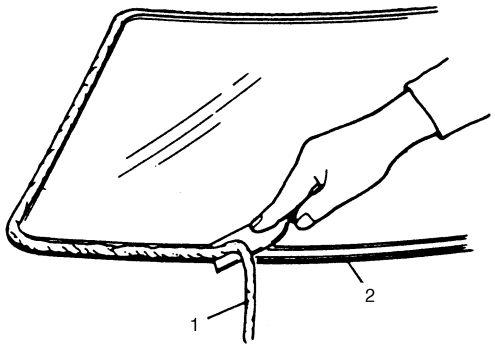

I2RH01950043-01

Installation

1) Using cleaning solvent, clean windshield edge where windshield glass is to be adhered. (Let it dry for more than 10 minutes.)
2) Install new glass stoppers (1) (2 pieces) to lower side of windshield (2) as shown.

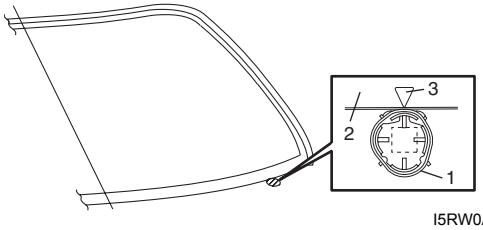

I5RW0A950002-01

3. Mark

3) To determine installing position of glass (1) to body (2), position glass against body so that clearance between upper end of glass (1) and body (2) is approximately 5.5 mm (0.217 in.) and clearances between each side end (right & left) of glass (1) and body (2) are even. Then mark mating marks (3) on glass (1) and body (2) as shown. Upper clearance can be adjusted by moving glass stoppers position.

<u>Windshield clearance</u>
"a": approx. 5.5 mm (0.217 in.)

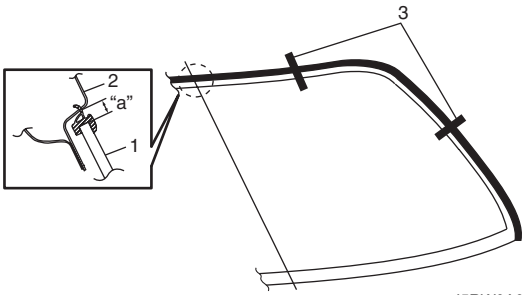

I5RW0A950003-02

4) Clean contact surfaces of old adhesive (4), paint or bare metal thoroughly.
If surfaces of paint or bare metal come out, apply primer (2) for body with caution not to apply primer (2) to surface of adhesive remaining on body.

NOTE

- **Be sure to refer to primer maker's instruction for proper handling and drying time.**
- **Do not touch body and old adhesive surfaces where glass is to be adhered.**

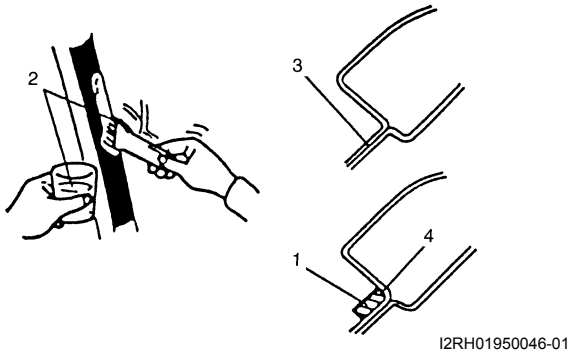

1. Do not apply primer	3. Apply primer

5) Install new molding to glass.
6) Clean glass surface to be adhered to body with clean cloth. If cleaning solvent is used, let it dry for 10 minutes or more.

Cleaning Area for windshield (distance from the edge of glass or molding)
30 – 50 mm (1.19 – 1.96 in.)

7) Install new spacers (1) to windshield (2).

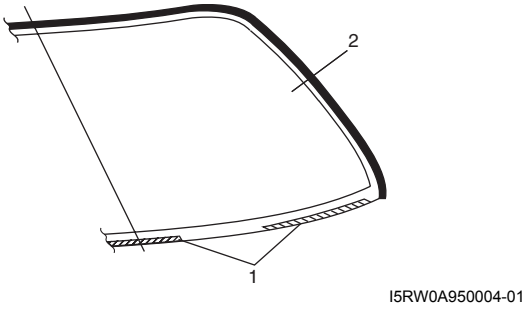

8) Using new brush, apply sufficient amount of primer onto glass along glass edge.

NOTE

- **Be sure to refer to maker's instruction for proper handling and drying time.**
- **Do not apply primer on outside of ceramic coated surface.**
- **Do not touch primer coated surface.**

Width applied primer for windshield
"a": 17 mm (0.67 in.)
"b": 20 mm (0.79 in.)

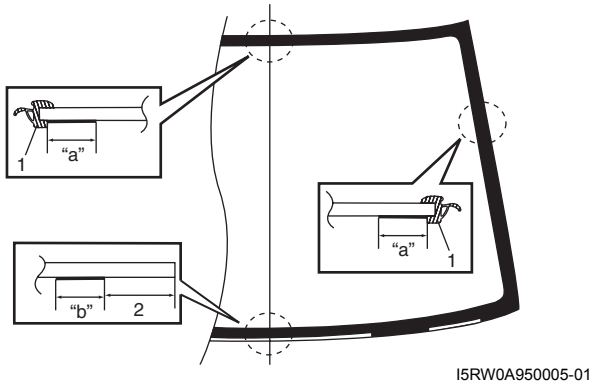

1. Molding	2. 40 mm (1.57 in.)

9) Apply primer for molding along molding surface all around.
10) Apply adhesive (1) referring to figure.

NOTE

- **Press glass (2) against fittings surface of body panel quickly after adhesive (1) is applied.**
- **Use of rubber sucker grip is helpful to hold and carry glass after adhesive (1) is applied.**
- **Perform steps 8) to 9) within 10 min. to ensure sufficient adhesion.**
- **Be sure to refer to adhesive maker's instruction for proper handling and drying time.**
- **Start from bottom side of glass (2).**
- **Be careful not to damage primer.**

Adhesive amount specifications and position for windshield

Width “a”: Approx. 7 mm (0.27 in.)
Height “b”: Approx. 15 mm (0.59 in.)
Position “c”: Approx. 10 mm (0.39 in.) for right, left and upper sections
Position “d”: Approx. 50 mm (1.97 in.) for bottom section

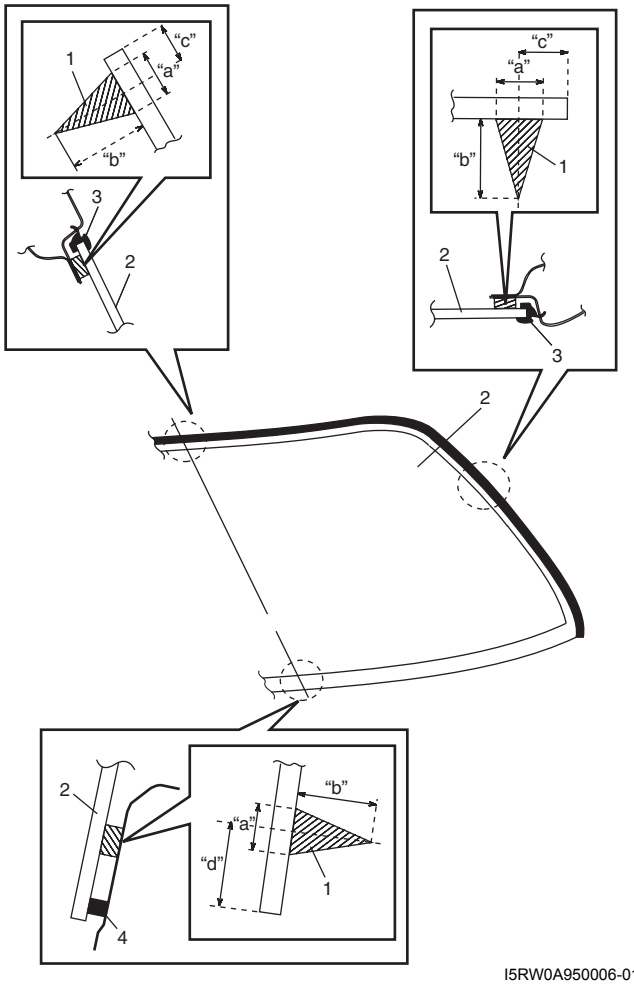

I5RW0A950006-01

3. Molding	4. Windshield glass spacer

11) Holding rubber sucker grips (1), place glass onto body by aligning mating marks marked in step 3) and press it.

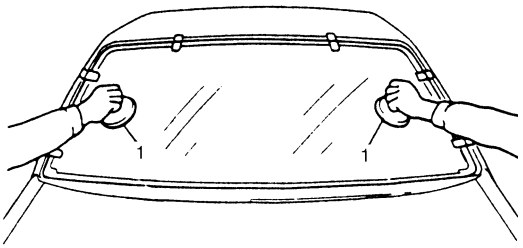

I2RH01950050-01

12) Check for water leakage by pouring water over windshield through hose. If leakage is found, dry windshield and fill leaky point with adhesive. If water still leaks even after that, remove glass and start installation procedure all over again.

NOTE

- **Do not use high pressure water.**
- **Do not blow compressed air directly at adhesive applied part when drying.**
- **Do not use infrared lamp or like for drying.**

I2RH01950051-01

⚠ CAUTION

Upon completion of installation, note the following.

- **Sudden closing of door before adhesive is completely set may cause glass to become loose or to come off. Therefore, if door is opened or closed before adhesive is completely set, make sure to open all door glasses and use proper care.**
- **If molding is not securely in place, hold it down with a tape until adhesive is completely set.**
- **Each adhesive has its own setting time.**
- **Be sure to refer to its maker’s instruction, check setting time of adhesive to be used and observe precautions to be taken before adhesive is set.**
- **Refrain from driving till adhesive is completely set so as to ensure proper and sufficient adhesion.**

Front Pillar Window Components

S7RW0A9506003

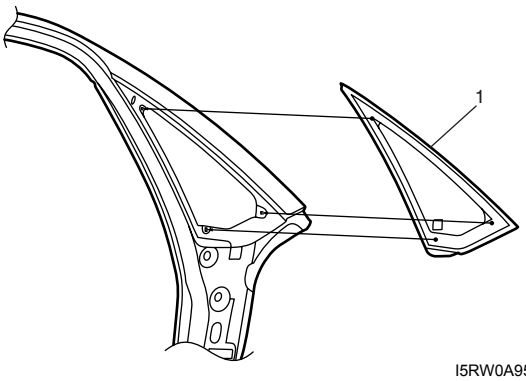

I5RW0A950007-02

1. Front pillar window glass

Front Pillar Window Removal and Installation

S7RW0A9506004

Refer to “Windshield Removal and Installation” as preparation, removal and installation procedures are basically the same. However, note the following.

- Observe the following precautions when applying adhesive (1) along glass (2) edge.
- Adhesive (1) should be applied evenly especially in height.
- Be careful not to damage primer (3).
- Press glass against body quickly after adhesive (1) is applied.

Adhesive amount specification and position for front pillar window

Height “a”: 10 mm (0.39 in.)
Width “b”: 6 mm (0.24 in.)
Position “c”: 4.5 mm (0.18 in.)
Width “d”: 12 mm (0.47 in.)
Position “e”: 3.5 mm (0.14 in.)
Position “f”: 5.5 mm (0.22 in.)
Width “g”: 11.3 mm (0.44 in.)

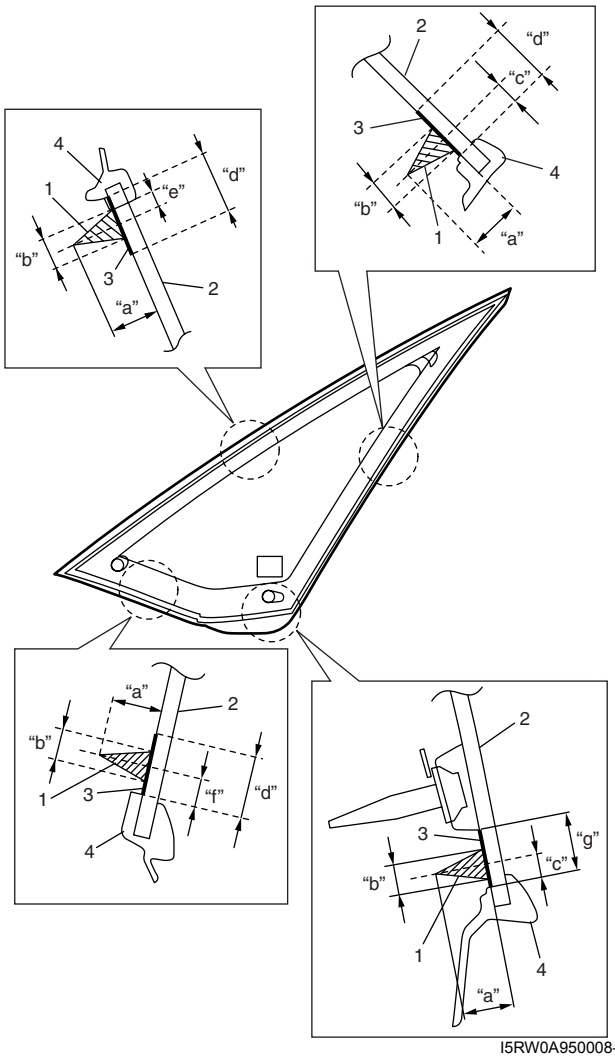

I5RW0A950008-01

4. Molding

Rear Quarter Window Components (Hatchback Model)

S7RW0A9506005

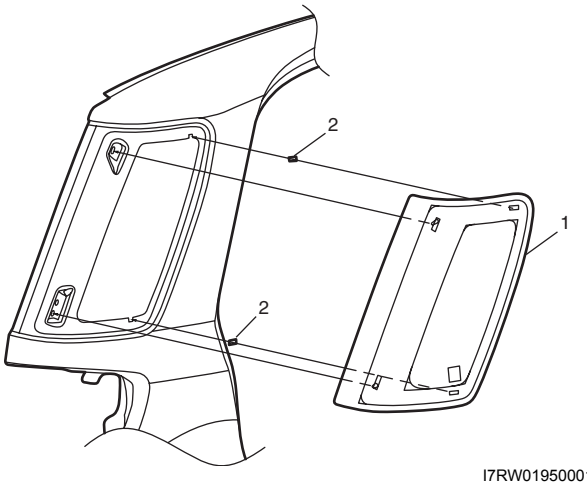

I7RW01950001-03

1. Rear quarter window glass	2. Fastener

Rear Quarter Window Removal and Installation (Hatchback Model)

S7RW0A9506006

Refer to “Windshield Removal and Installation” as preparation, removal and installation procedures are basically the same. However, note the following.

- Observe the following precautions when applying adhesive (1) along glass (2) edge.
- Adhesive (1) should be applied evenly especially in height.
- Be careful not to damage primer (3).
- Press glass against body quickly after adhesive (1) is applied.

Adhesive amount specifications and position for rear quarter window

Width “a”: Approx. 6 mm (0.24 in.)
Height “b”: Approx. 13 mm (0.51 in.)
Position “c”: Approx. 12 mm (0.47 in.)
Width “d”: Approx. 14 mm (0.55 in.)
Position “e”: Approx. 84 mm (3.31 in.)

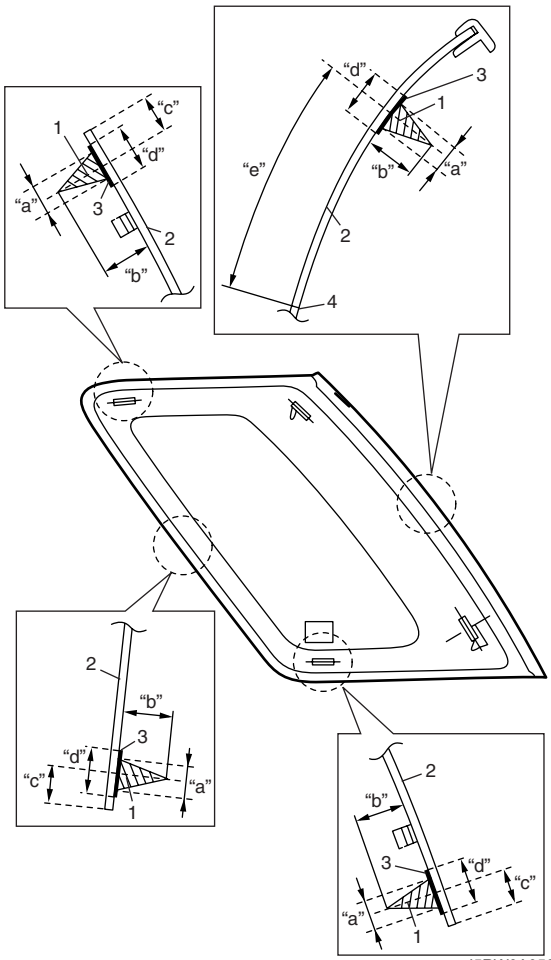

I5RW0A950010-02

4. Ceramic print line

Rear End Door Window Components (Hatchback Model)

S7RW0A9506007

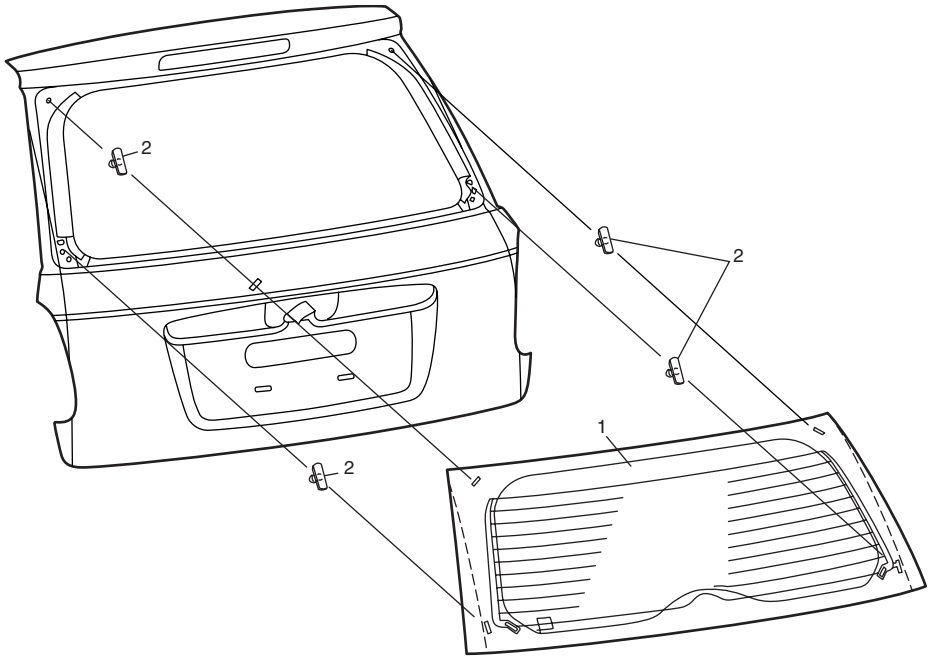

I5RW0A950011-02

1. Rear end door glass	2. Fastener

Rear End Door Glass Removal and Installation (Hatchback Model)

S7RW0A9506008

Refer to “Windshield Removal and Installation” as preparation, removal and installation procedures are basically the same. However, note the following.

- Observe the following precautions when applying adhesive (1) along glass (2) edge.
- Adhesive (1) should be applied evenly especially in height.
- Be careful not to damage primer (3).
- Install glass (2) on rear end door panel (5) noting the following.
  - With the position of fastener (4) properly aligned.
  - With the position of ceramic mark (6) aligned to the mark (7) of rear end door panel (5).
- Press glass against body quickly after adhesive (1) is applied.

<u>Adhesive amount specifications and position for rear end door glass</u>
Height “a”: 13 mm (0.51 in.)
Width “b”: 7 mm (0.28 in.)
Width “c”: 14 mm (0.55 in.)
Position “d”: 15 mm (0.59 in.)
Position “e”: 42 mm (1.65 in.)
Position “f”: 37 mm (1.46 in.)
Position “g”: 9 mm (0.35 in.)
Position “h”: 14 mm (0.55 in.)

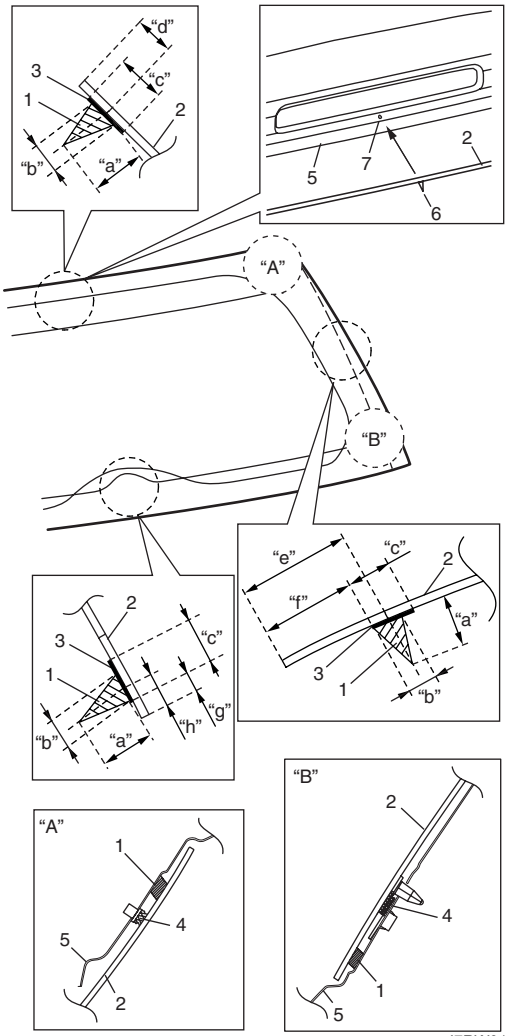

I7RW01950010-01

Back Window Components (Sedan Model)

S7RW0A9506029

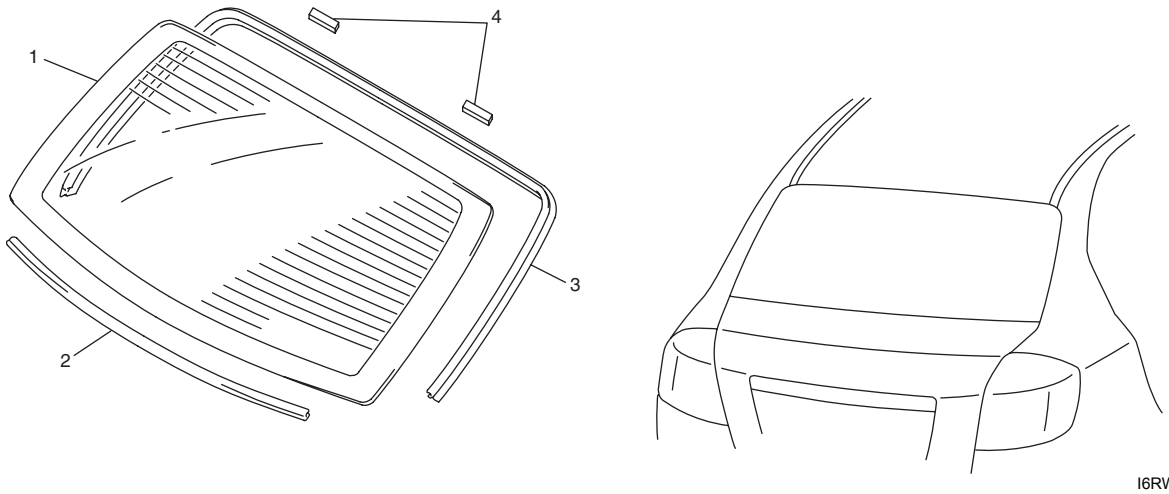

I6RW0B950001-01

1. Back window	2. Back window spacer	3. Back window molding	4. Fastener

Back Window Removal and Installation (Sedan Model)

S7RW0A9506030

Refer to “Windshield Removal and Installation” as preparation, removal and installation procedures are basically the same. However, note the following.

- Observe the following precautions when applying adhesive (1) along glass (2) edge.
- Adhesive (1) should be applied evenly especially in height.
- Be careful not to damage primer (3).
- Press glass against body quickly after adhesive (1) is applied.

<u>Adhesive amount specifications and position for back window</u>
Width “a”: 7.0 mm (0.28 in.)
Width “b”: 7.4 mm (0.29 in.)
Height “c”: 13.0 mm (0.51 in.)
Height “d”: 12.3 mm (0.48 in.)
Position “e”: 6.0 mm (0.24 in.)
Position “f”: 10.4 mm (0.41 in.)
Position “g”: 6.3 mm (0.25 in.)
Width “h”: 14.0 mm (0.55 in.)

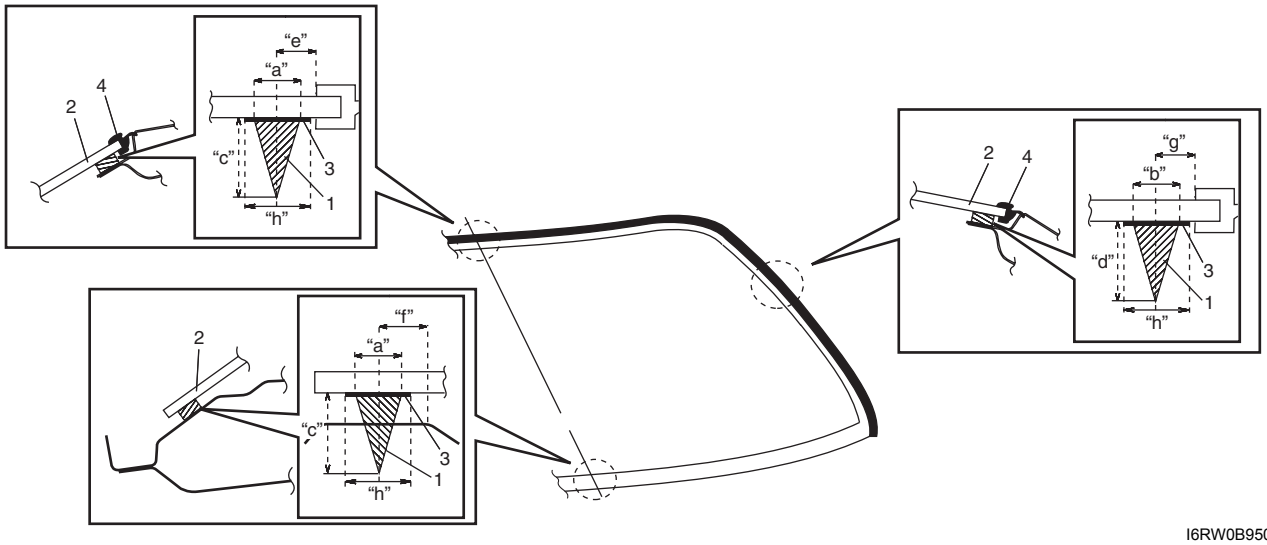

I6RW0B950002-01

4. Back window molding

Front Door Window Components

S7RW0A9506009

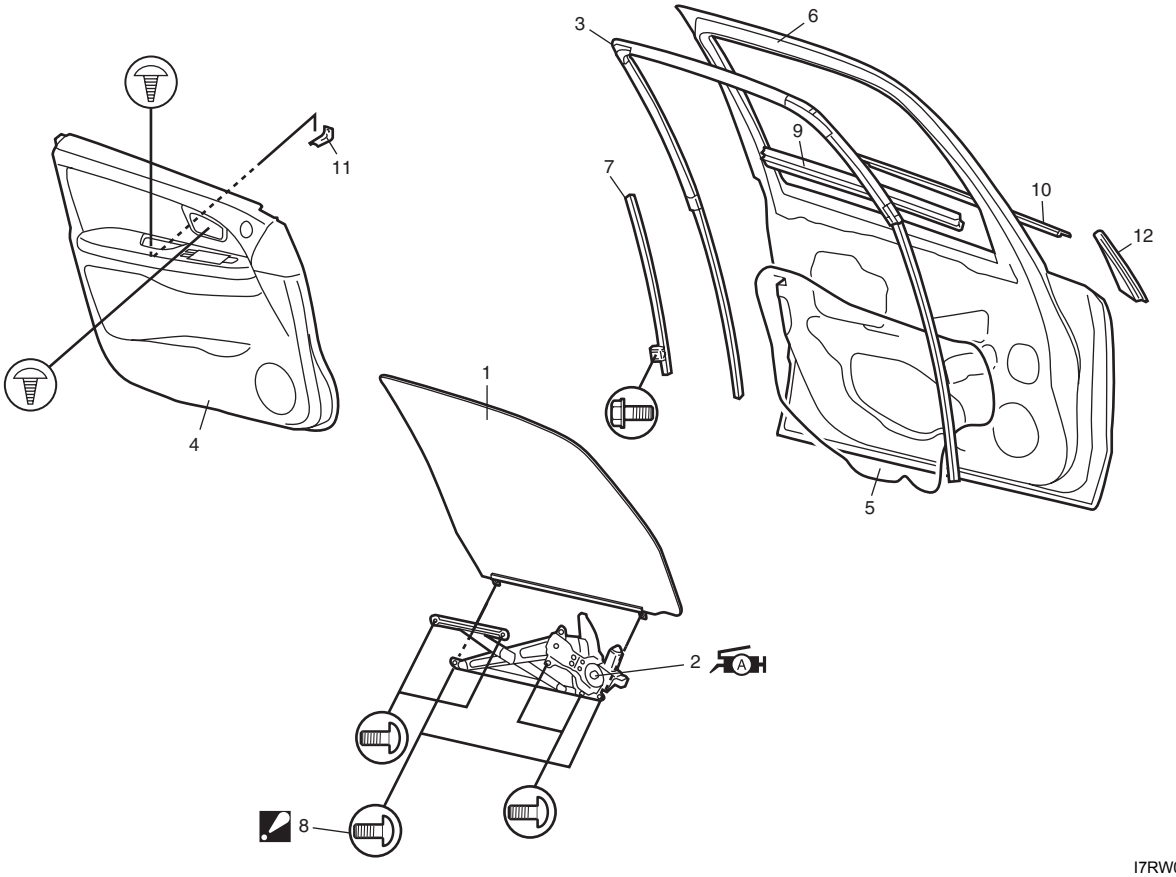

I7RW01950002-01

1. Door glass	7. Front door sash
2. Window regulator assembly : Apply lithium grease 99000-25011 to sliding part.	8. Door glass mounting screw : Tighten rear screw first, and then tighten front screw.
3. Glass run	9. Front door inner weather-strip
4. Door trim	10. Front door outer weather-strip
5. Door sealing cover	11. Door trim bracket
6. Door panel	12. Door mirror trim

Front Door Glass Removal and Installation

S7RW0A9506010

NOTE

(For pinching prevention function model) After disconnecting the power window main switch, make sure to execute to the initial setting, (to have the door glass closed position learned) refer to "Power Window Main Switch Initialization (Pinching Prevention Function Model)".

Removal

1) Remove door mirror trim (1).
2) Remove door trim mounting screws (2).

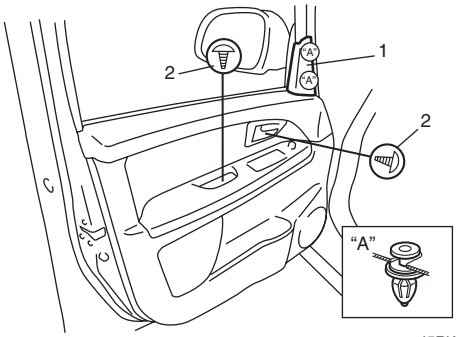

I5RW0A950014-02

3) Remove door trim (1) as shown.
   And disconnect connectors from power window switch, door mirror and tweeter (if equipped).

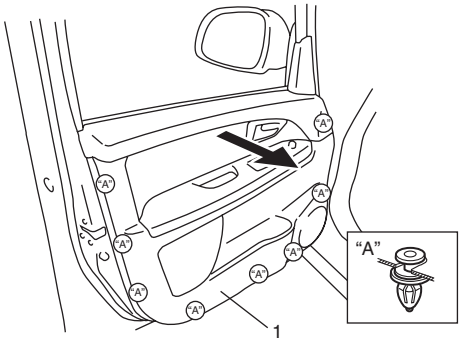

I8RW01950002-01

4) Remove door inner weather-strip (3).
5) Remove door trim bracket (1).
6) Remove door sealing cover (2).

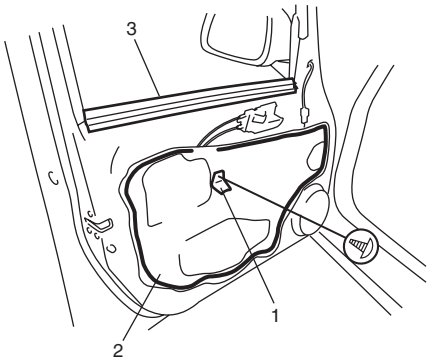

I5RW0A950016-02

7) Remove door glass mounting screws (1).
8) Remove door glass (2) while tilting it as shown.

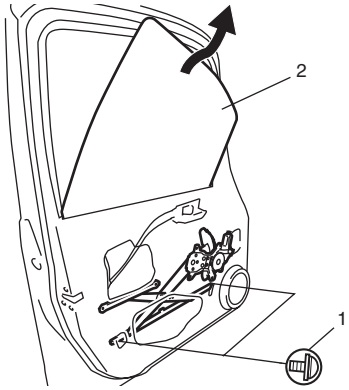

I5RW0A950017-03

Installation

Reverse removal procedure noting the following instructions.

- If there is deformity for glass run, replace it with a new one.
- Tighten door glass rear mounting screw (1) first, and then tighten door glass front mounting screw (2).

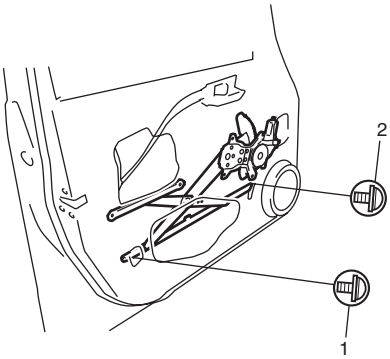

I5RW0A950018-02

- Secure door sealing cover (1) with adhesive (2).

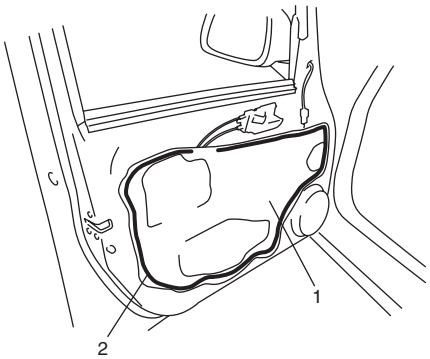

I5RW0A950019-02

- Install front door trim.

Front door trim attaching order
(1) → (2) → (3) → (4) → (5) → (6) → (7) → (8)

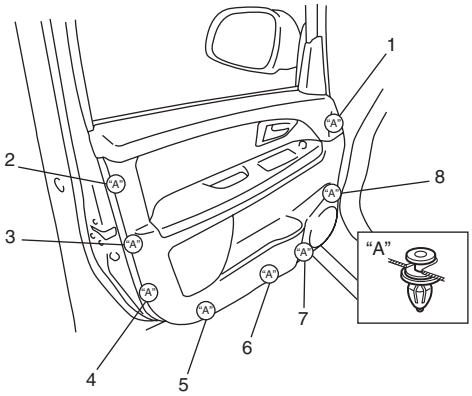

I8RW01950003-01

Front Door Window Regulator Removal and Installation

S7RW0A9506011

NOTE

(For pinching prevention function model) After replacing or disconnecting the driver side door window regulator, make sure to execute to the initial setting, (to have the door glass closed position learned) refer to "Power Window Main Switch Initialization (Pinching Prevention Function Model)".

Removal

1) Remove door glass referring to "Front Door Glass Removal and Installation".
2) Disconnect power window motor lead wire at coupler (if equipped).
3) Remove regulator mounting screws (1), and then remove front door window regulator (2).

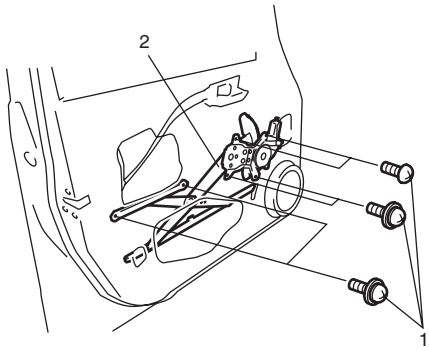

I5RW0A950021-02

Installation

Reverse removal procedure noting the following instruction.

- Apply grease to sliding portions of window regulator.

  : Grease 99000–25011 (SUZUKI Super Grease A)

Front Door Window Regulator Inspection

S7RW0A9506012

NOTE

(For pinching prevention function model) After replacing or disconnecting the driver side door window regulator, make sure to execute to the initial setting, (to have the door glass closed position learned) refer to "Power Window Main Switch Initialization (Pinching Prevention Function Model)".

Check the following parts for wear, damage, smooth operation and lubrication:

- Check regulator sliding and rotating parts.
- Check rollers.

Rear Door Window Components

S7RW0A9506013

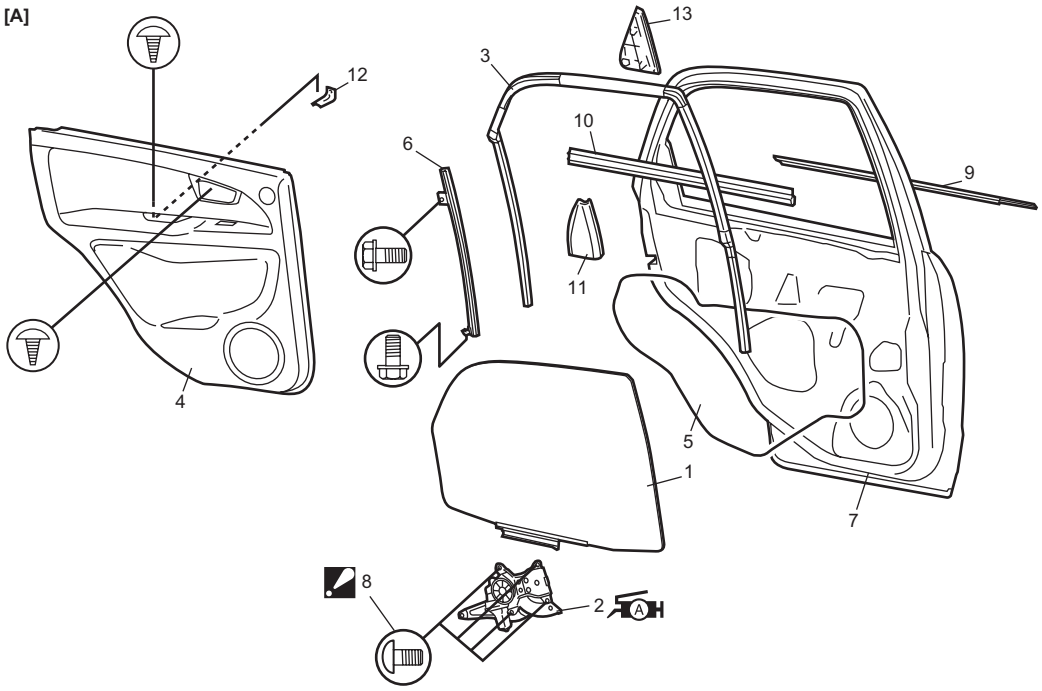

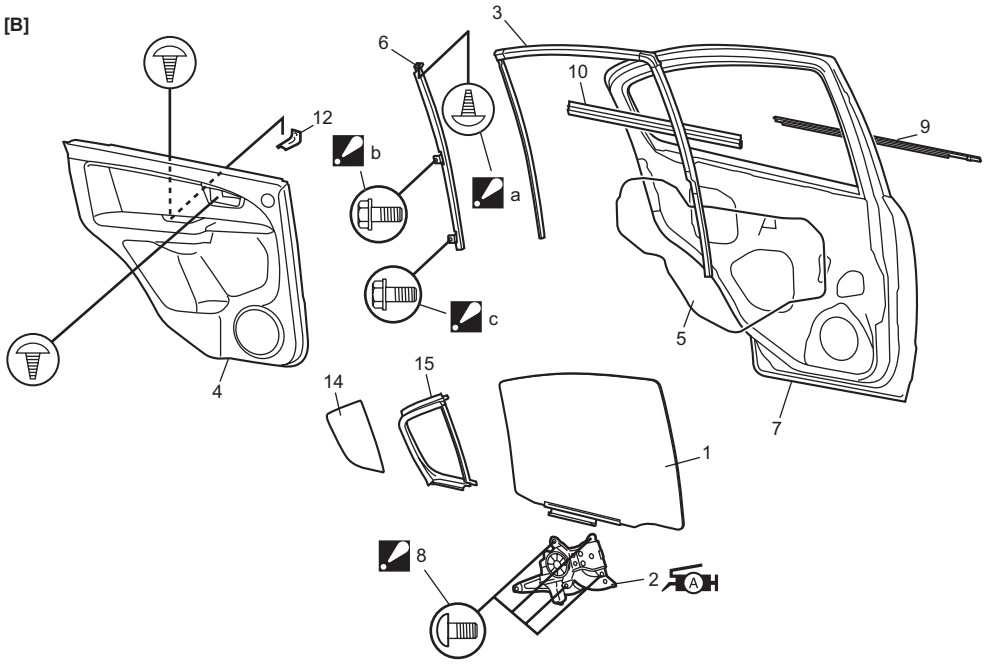

I8RW01950001-02

1. Door glass	10. Rear door inner weather-strip
A 2. Window regulator assembly : Apply lithium grease 99000-25011 to sliding part.	11. Rear door inner garnish
3. Glass run	12. Door trim bracket
4. Door trim	13. Rear door outer garnish
5. Door sealing cover	14. Rear door partition glass
6. Door sash	15. Rear door partition weather-strip
7. Door panel	[A]: Hatchback model
8. Rear door window regulator mounting screw : Tighten front screws first, and then tighten rear screws.	[B]: Sedan model
9. Rear door outer weather-strip	a, b, c: Door sash mounting bolt and screw. : Tightening order: a→b→c

Rear Door Glass Removal and Installation

S7RW0A9506014

Removal

1) Remove rear door inner garnish (1) (hatchback model).
2) Remove door trim mounting screws (2).

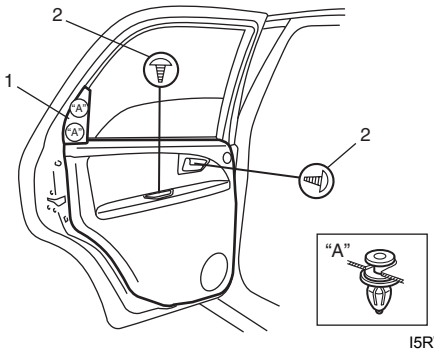

I5RW0A950023-02

3) Remove door trim (1) as shown.

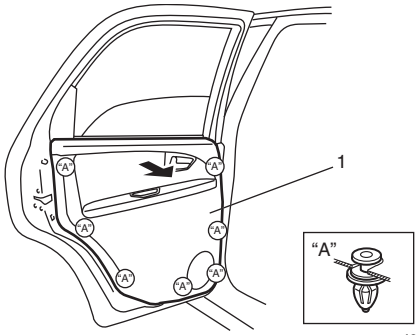

I8RW01950005-01

4) Remove door outer garnish (1) (hatchback model).
5) Remove door outer weather-strip (2).

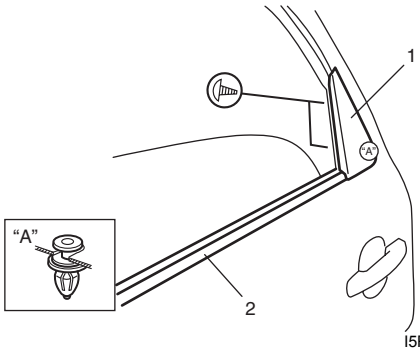

I5RW0A950025-01

6) Remove door inner weather-strip (3).
7) Remove door trim bracket (1).
8) Remove door sealing cover (2).

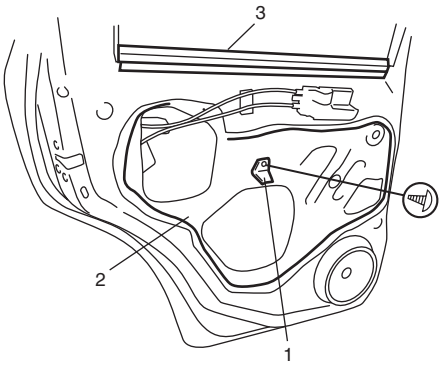

I5RW0A950026-03

9) Detach rear part of glass run (2) and rear door sash (1).

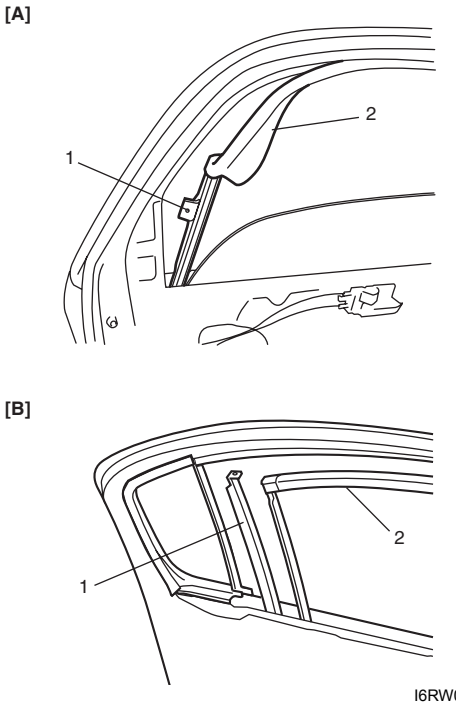

I6RW0B950004-03

[A]: Hatchback model	[B]: Sedan model

10) Remove rear door partition glass (1) with rear door partition weather-strip (2) (sedan model).

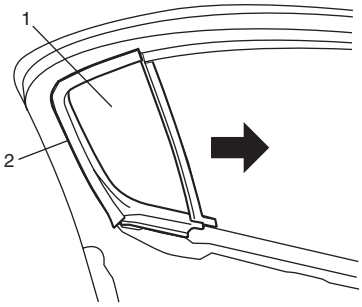

I6RW0B950005-01

11) Remove door glass as shown.

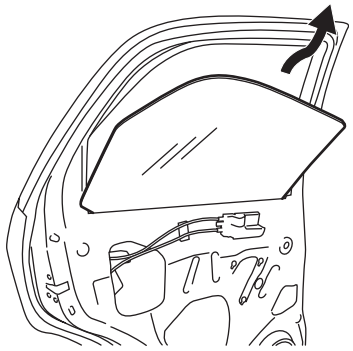

I5RW0A950028-01

Installation

Reverse removal procedure noting the following instructions.

- Tighten door sash mounting bolts and screw (“1” – “3”) according to numerical order as shown in figure.

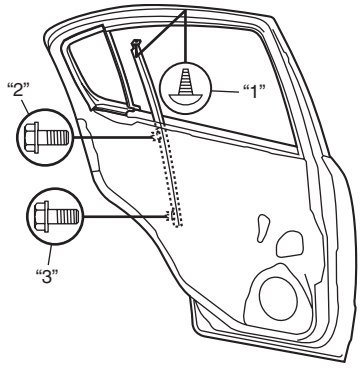

I6RW0B950006-01

- If there is deformity for glass run, replace it with a new one.
- Secure door sealing cover (1) with adhesive (2).

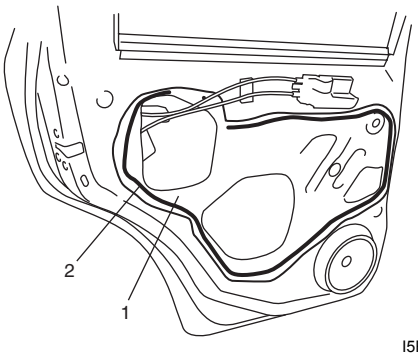

I5RW0A950029-04

- Install rear door trim.

<u>Rear door trim attaching order</u>
(1) → (2) → (3) → (4) → (5) → (6) → (7)

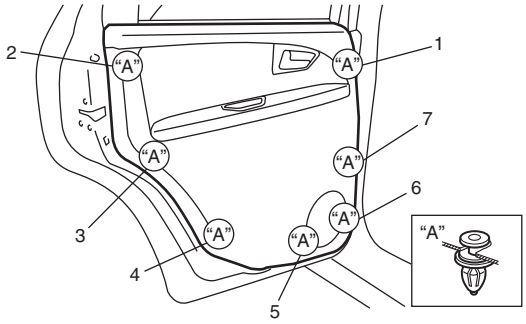

I8RW01950006-01

Rear Door Window Regulator Removal and Installation

S7RW0A9506015

Removal

1) Remove door glass referring to “Rear Door Glass Removal and Installation”.
2) Disconnect power window motor lead wire at coupler (if equipped).
3) Loosen regulator mounting screws, and then remove rear window regulator (1).

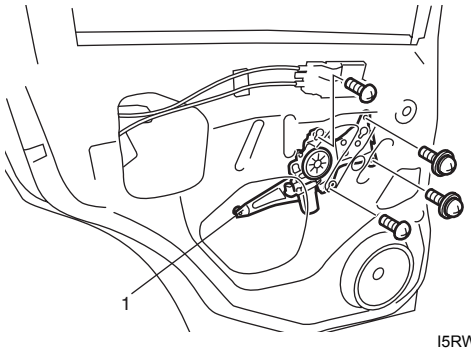

I5RW0A950031-01

Installation

Reverse removal procedure noting the following.

- Apply grease to sliding and rotating portions of window regulator.

  : Grease 99000–25011 (SUZUKI Super Grease A)

- Tighten rear door window regulator attaching screws.

  Rear door window regulator screw tightening order
  (1) → (2)

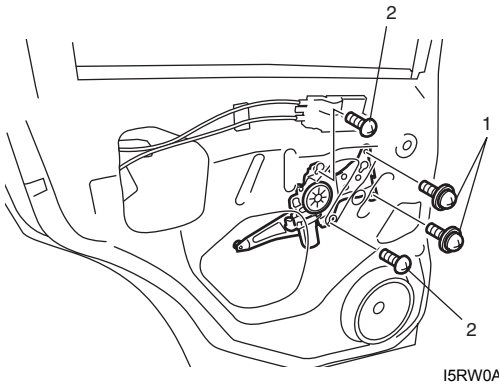

I5RW0A950032-01

Rear Door Window Regulator Inspection

S7RW0A9506016

Check the following point:

- Check regulator sliding and rotating parts.
- Check rollers for wear and damage.

Rear End Door Window / Back Window Defogger Switch Inspection

S7RW0A9506017

1) Check rear end door window/back window defogger switch for operation as follows.
   a) Rear end door window/back window defogger switch is built in HVAC control module (unit). Remove HVAC control module (unit) referring to “HVAC Control Unit Removal and Installation in Section 7A” or “HVAC Control Module Removal and Installation: Automatic Type in Section 7B”.
   b) Check that there is continuity between terminal (1) and terminal (2) of HVAC control module (unit) when rear end door window/back window defogger switch is at ON position. (Rear end door window/back window defogger switch is kept in push.)
   c) Check that there is no continuity between terminal (1) and terminal (2) of HVAC control module (unit) when rear end door window/back window defogger switch is at OFF position.
   If check result does not meet the above conditions, replace HVAC control module (unit).

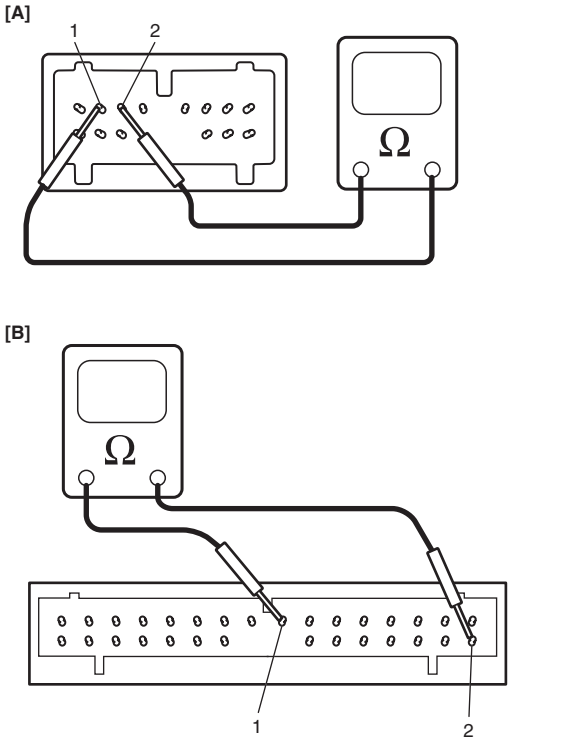

I5RW0A950033-01

[A]: Manual A/C model	[B]: Auto A/C model

Rear End Door Window / Back Window Defogger Relay Inspection

S7RW0A9506018

1) Disconnect negative (–) cable from battery.
2) Remove junction block assembly for inspection of rear end door window defogger relay.
   For removal, refer to “BCM (Included in Junction Block) Removal and Installation in Section 10B” (Hatchback model).
3) Remove rear end door window defogger relay (1) (Hatchback) or back window defogger relay (4) (Sedan) from junction block assembly (2).

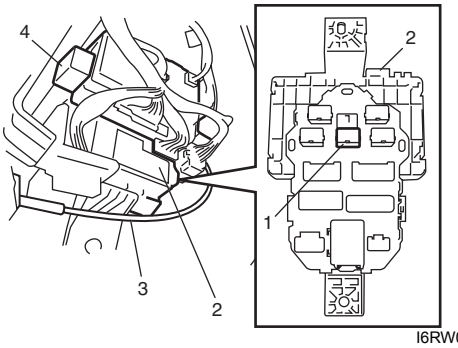

I6RW0B950007-02

3. Hood latch release cable

4) Check that there is no continuity between terminal “c” and “d”. If there is continuity, replace relay.
5) Check that there is continuity between terminals “c” and “d” when a 12 V battery is connected to terminals “a” and “b”.
If malfunction is found, replace it with a new one.

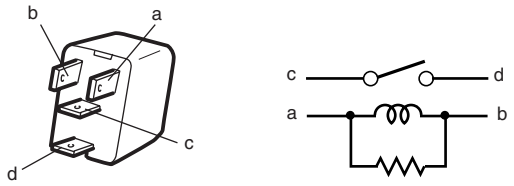

I4RS0A950028-01

Rear End Door Window / Back Window Defogger Wire Inspection

S7RW0A9506019

NOTE

- **When cleaning glass, use a dry cloth to wipe it along heat wire (1) direction.**
- **When cleaning glass, do not use detergent or abrasive-containing glass cleaner.**
- **When measuring wire voltage, use a tester with positive probe (2) wrapped with a tin foil (3) which should be held down on wire by finger pressure.**

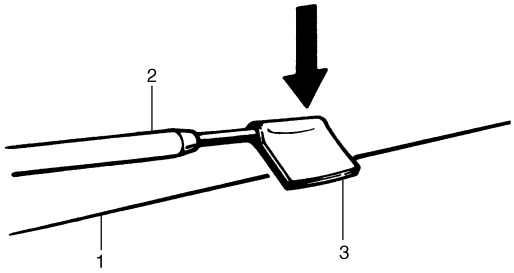

I2RH01950002-01

Wire Damage Inspection

1) Start engine and run it idle speed.
2) Turn on defogger switch.
3) Measure voltage at each position(s) as follows.
Hatchback model:
Measure voltage at the center of each defogger wire (1), and check defogger wire condition according to the following table.
Sedan model:
Measure voltage at position “a” and position “b” of each defogger wire (1), and check defogger wire condition according to the following table.
If defogger wire open is found, go to next step.

Defogger wire voltage for Hatchback model

Voltage	Circuit
10 – 12 V	**Defogger wire open between its center and defogger wire ground terminal end (3)**
4 – 6 V	**Normal condition**
0 – 1 V	**Defogger wire open between its center and defogger wire power source terminal end (2)**

Defogger wire voltage for Sedan model

Measuring position	Voltage	Circuit
“a”	**5 – 7 V**	**Defogger wire open between defogger wire power source terminal end (2) and position “a”**
	8 – 10 V	**Normal condition**
	12 – 14 V	**Defogger wire open between position “a” and center line (4)**
“b”	**0 – 1 V**	**Defogger wire open between center line (4) and position “b”**
	2 – 4 V	**Normal condition**
	5 – 7 V	**Defogger wire open between position “b” and defogger wire ground terminal end (3)**

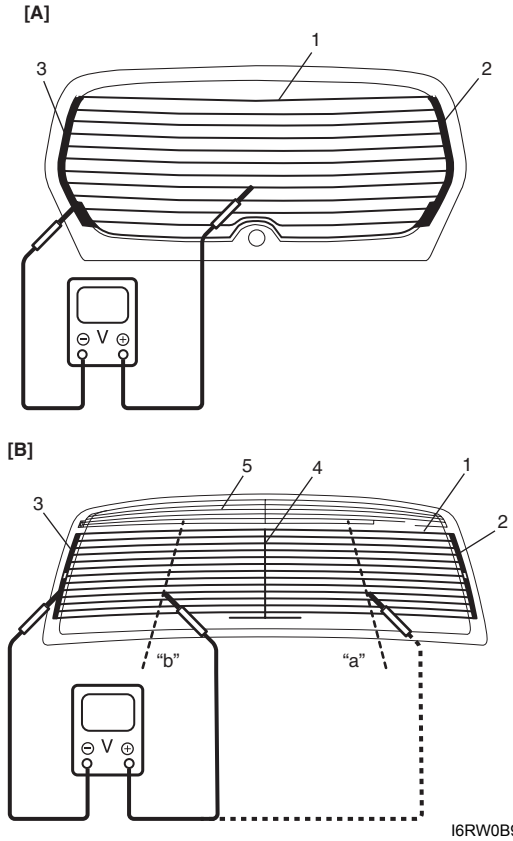

I6RW0B950008-01

5. Glass antenna	[A]: Hatchback model	[B]: Sedan model

4) Touch voltmeter negative (–) lead to defogger wire ground terminal end (1).
5) Touch voltmeter positive (+) lead with a foil strip to defogger wire power source terminal end (2), then move it along wire to defogger wire ground terminal end (1).
   For hatchback model:
   The place where voltmeter fluctuates from 10 – 12 V to 0 – 1 V is where there is open.
   For sedan model:
   The place where voltmeter fluctuates from 12 – 14 V to 5 – 7 V or 5 – 7 V to 0 – 1 V is where there is open.
   If found defective, repair defogger wire referring to “Rear End Door Window / Back Window Defogger Wire Repair”.

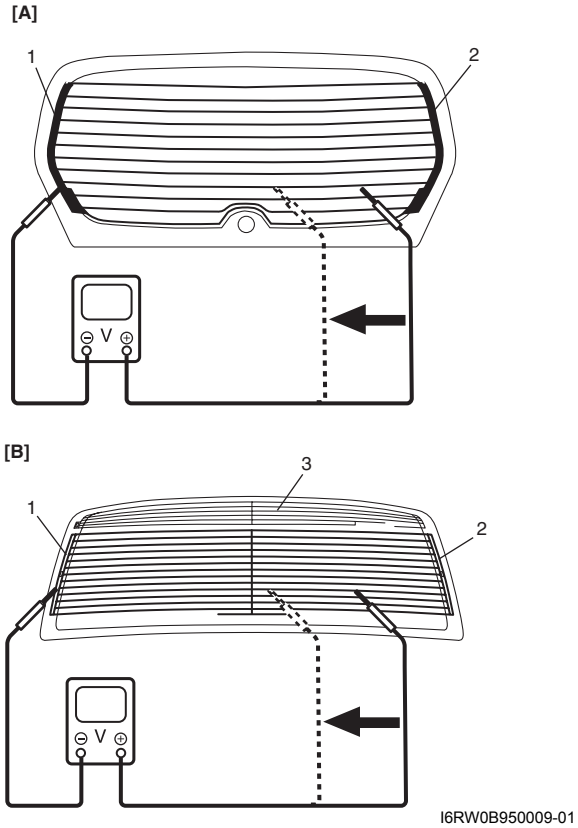

I6RW0B950009-01

3. Glass antenna	[A]: Hatchback model	[B]: Sedan model

Rear End Door Window / Back Window Defogger Wire Repair

S7RW0A9506020

1) Use white gasoline for cleaning.
2) Apply masking tape (1) at both upper and lower sides of heat wire (2) to be repaired.
3) Apply commercially-available repair agent (3) with a fine-tip brush (4).
4) 2 to 3 minutes later, remove masking tapes (1).

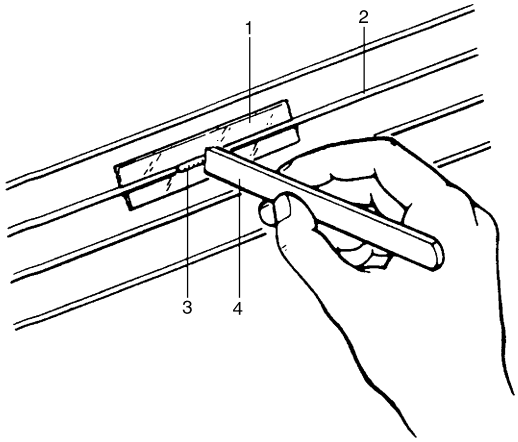

I2RH01950005-01

5) Leave repaired heat wire as it is for at least 24 hours before operating the defogger again.

Power Window Main Switch Inspection

S7RW0A9506021

Switch for driver side window
Without Pinching Prevention Function Model

1) Remove driver side door trim referring to step 1) to 4) of “Front Door Glass Removal and Installation”.
2) Remove power window main switch from door trim.
3) Connect 12 V battery positive (+) terminal to terminal “IG” of power window main switch and its negative (–) terminal to terminal “E” of power window main switch.
4) Check for continuity between terminals as shown below.
   If check result is not as specified, replace power window main switch.

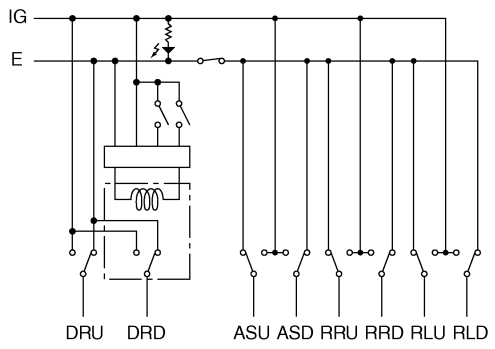

Driver side window switch (1)	IG	DRU	DRD	E
UP	○	○		
			○	○
OFF		○	○	○
DOWN	○		○	
		○		○

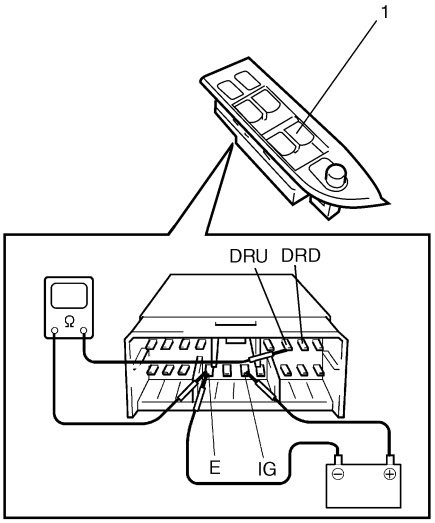

I7RW01950004-01

With Pinching Prevention Function Model

NOTE

After replacing or disconnecting the power window main switch, make sure to execute to the initial setting, (to have the door glass closed position learned) refer to "Power Window Main Switch Initialization (Pinching Prevention Function Model)".

1) Remove driver side door trim referring to step 1) to 3) of "Front Door Glass Removal and Installation".
2) Remove power window main switch from door trim.
3) Connect 12 V battery positive (+) terminal to terminal "IG" and "B" of power window main switch and its negative (–) terminal to terminal "E" of power window main switch.
4) Check for continuity between terminals as shown below.
   If check result is not as specified, replace power window main switch.

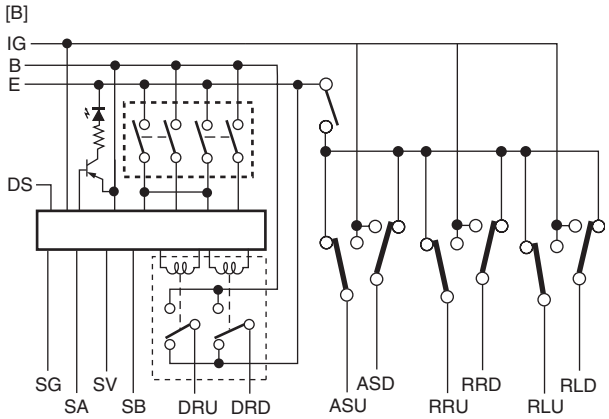

[B] \ [A]	B	DRU	DRD	E
1	○	○	○	○
2		○	○	○
3	○		○	
		○		○

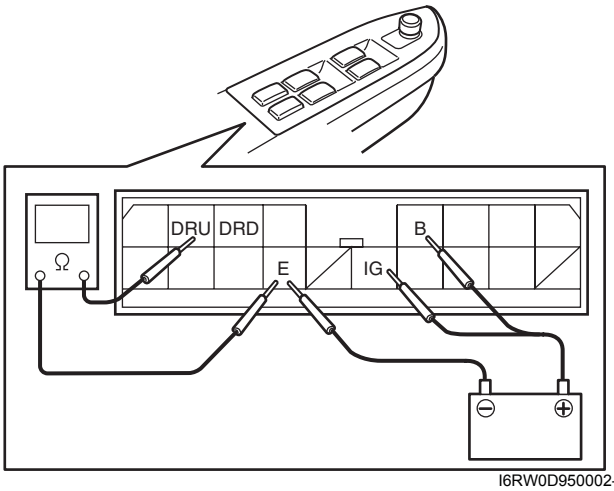

I6RW0D950002-01

[A]:	Terminal
[B]:	Driver side window switch position
1.	UP
2.	OFF
3.	DOWN

Switch for other window than driver side

1) Remove driver side door trim referring to step 1) to 4) of “Front Door Glass Removal and Installation”.
2) Remove power window main switch from door trim.
3) Check for continuity between terminals as shown below.
   If check result is not as specified, replace power window main switch.

Passenger side window switch (1)		IG	ASU	ASD	E
Rear right side window switch (2)		IG	RRU	RRD	E
Rear left side window switch (3)		IG	RLU	RLD	E
UNLOCK (4)	UP	○—○		○—○	
	OFF		○—○	○—○	
	DOWN	○—○	○—○		
LOCK (4)	UP	○—○			
	OFF		○—○		
	DOWN	○—○			

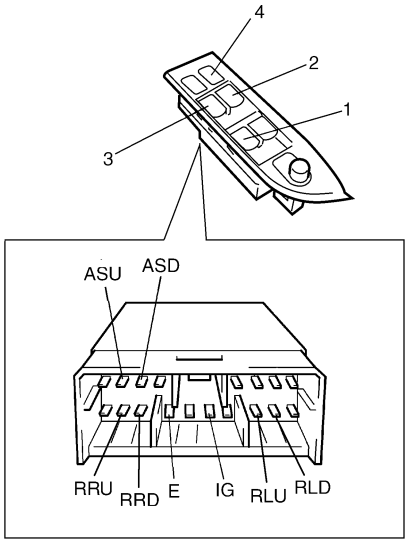

I7RW01950005-01

Power Window Sub Switch Inspection

S7RW0A9506022

1) Remove front door trim from door panel, refer to Step 1) to 4) of “Front Door Glass Removal and Installation”.
2) Remove power window sub switch from door trim.
3) Check for continuity between terminals at each switch condition.
   If check result is not as specified, replace switch.

Switch Position \ Terminal	A	B	C	D	E
UP	○—○		○—○		
OFF	○—○			○—○	
DOWN		○—○		○—○	

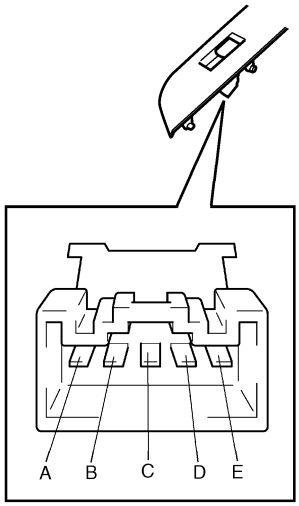

I5RW0A950037-01

Pulse Sensor and Its Circuit Inspection (Pinching Prevention Function Model)

S7RW0A9506031

NOTE

After replacing or disconnecting the driver side power window regulator (motor), power window main switch, battery and/or fuse, make sure to execute the initial setting, (to have the door glass closed position learned) refer to "Power Window Main Switch Initialization (Pinching Prevention Function Model)".

Pulse Sensor Circuit Diagram

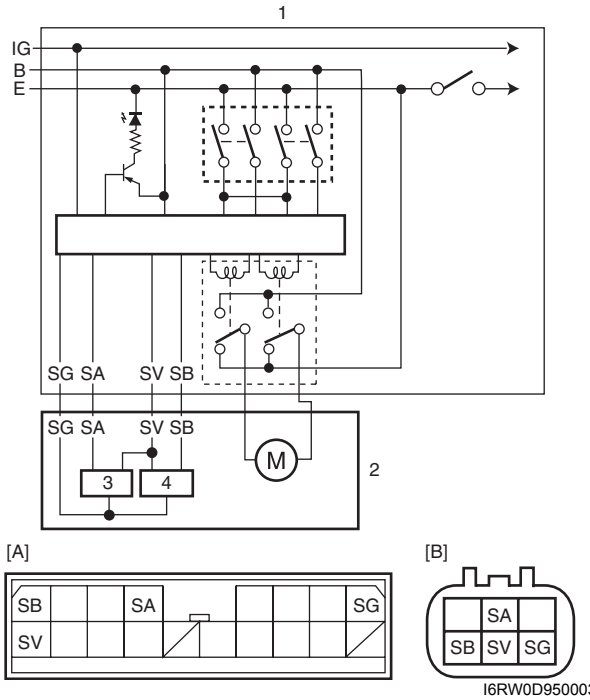

I6RW0D950003-01

[A]:	Power window main switch connector (viewed from harness side)
[B]:	Driver side power window motor connector (viewed from harness side)
1.	Power window main switch
2.	Driver side power window motor
3.	Pulse sensor 1
4.	Pulse sensor 2

1) Remove driver side door trim referring to Step 1) to 3) of "Front Door Glass Removal and Installation".
2) Remove power window main switch from driver side door trim, and them connect connector to power window main switch.
3) Disconnect power window motor connector.
4) Turn ignition switch to ON position.
5) Check that "SV" wire terminal voltage of power window motor connector is 10 – 14 V. If voltage is not satisfied, check power window main switch circuit for open, short and high resistance. If circuit is OK, replace power window main switch.
6) Connect power window motor connector.
7) Connect oscilloscope to power window main switch connector terminals.
8) Check pulse sensor signal by using oscilloscope. If pulse sensor signal is not satisfied, check pulse sensor 1 and 2 circuit. If circuit is OK, replace door window regulator (motor).

Reference Waveform

Measurement terminal	CH1: "SA" terminal to "SG" terminal CH2: "SB" terminal to "SG" terminal
Oscilloscope setting	CH1: 5V/DIV, CH2: 5V/DIV TIME: 10ms/DIV
Measurement condition	Ignition switch is at ON position, driver side power window operate

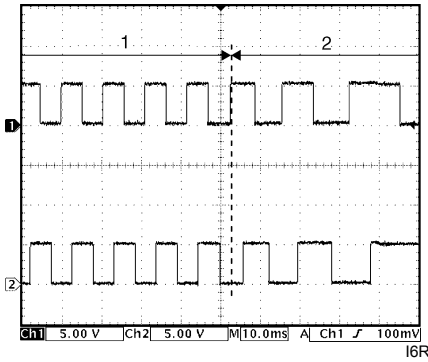

I6RW0D950004-01

1.	Normal operation
2.	Something caught

Power Window Main Switch Initialization (Pinching Prevention Function Model)

S7RW0A9506032

⚠ CAUTION

- **After replacing or disconnecting the driver side door window regulator (motor), power window main switch, battery or fuse, be sure to execute initial setting (to have door glass completely closed position learned). If initial setting is not executed, correct automatic operation (including pinching prevention operation) would not be available.**
- **Make sure that no foreign matter is pinched while executing initial setting.**

1) Open driver side door glass fully.
2) Raise driver side door window switch (MANUAL UP position) of power window main switch until door glass is closed completely and hold the switch in that state for 2 seconds or more.

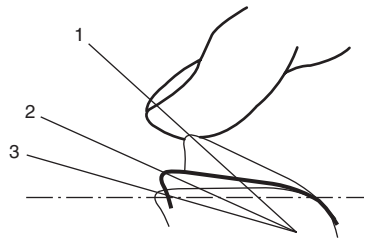

I6RW0D950005-01

1.	AUTO UP position
2.	MANUAL UP position
3.	OFF position

3) Use auto-down / auto-up function of power window main switch and check that door glass opens fully / closes completely.
4) Check pinching prevention function referring to “Inspection of Pinching Prevention Function (Pinching Prevention Function Model)”.

Door Mirror Components

S7RW0A9506023

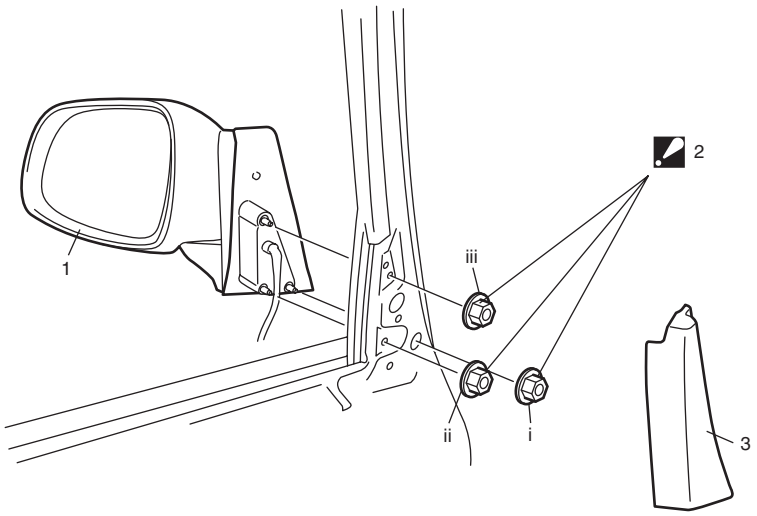

I5RW0A950038-03

1. Door mirror	2. Door mirror mounting nut :Tighten nuts in such order as indicated in the figure.	3. Door mirror trim

Door Mirror Removal and Installation

S7RW0A9506024

When removing or installing door mirror, refer to the figure in “Door Mirror Components”.

Power Door Mirror Switch Inspection

S7RW0A9506025

1) Remove driver side door trim referring to step 1) to 4) of “Front Door Glass Removal and Installation”.
2) Remove power window main switch from door trim.
3) Check for continuity between terminals at each switch position.
   If check result is not as specified, replace door mirror switch.

L / R	A / B	C	D	E / F	G
Up		○			○
			○	○	
Down			○		○
		○		○	
Left	○	○			
			○	○	
Right	○		○		
		○		○	

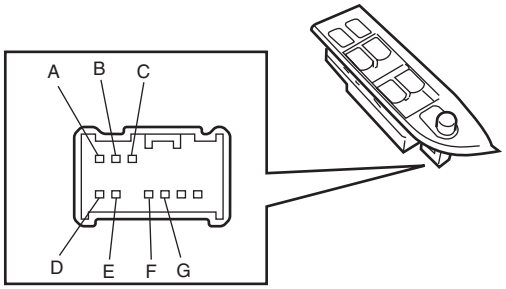

I5JB0A950039-01

Power Door Mirror Actuator Inspection

S7RW0A9506026

1) Remove door trim referring to step 1) to 3) of “Front Door Glass Removal and Installation”.
2) Disconnect door mirror coupler (1).
3) Check that door mirror operates properly when battery voltage is applied to connector terminals.
4) Connect battery positive (+) and negative (–) terminal to the door mirror terminals as shown.
   If it does not follow the table’s operation, replace door mirror assembly.

Operation \ Terminal	A	B	C
Up	⊕		⊖
Down	⊖		⊕
Left		⊕	⊖
Right		⊖	⊕

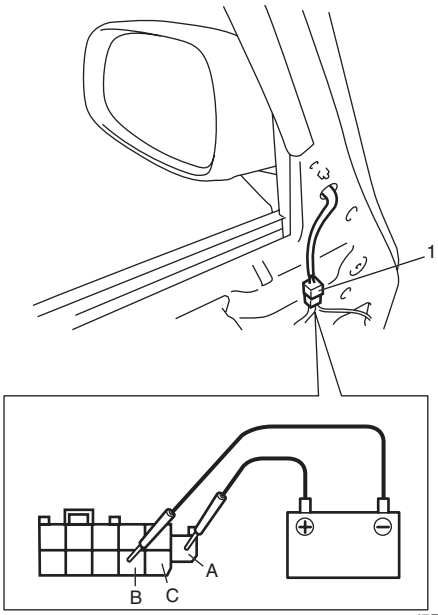

I7RW01950007-01

Door Mirror Heater Inspection (If Equipped)

S7RW0A9506033

1) Remove door trim referring to step 1) to 3) of “Front Door Glass Removal and Installation”.
2) Disconnect door mirror connector (1).
3) Check for continuity between terminals “a” and “b”.
   If no continuity, replace outside mirror.

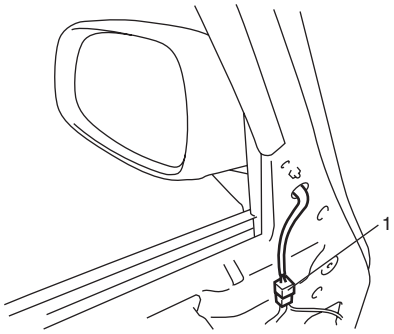

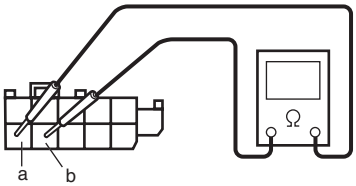

I7RW01950008-01

Door Mirror Heater Switch Inspection (If Equipped)

S7RW0A9506034

Door mirror heater is operated by rear end door window / back window defogger switch. Check rear end door window / back window defogger switch referring to “Rear End Door Window / Back Window Defogger Switch Inspection”.

Special Tools and Equipment

Recommended Service Material

S7RW0A9508001

Material	SUZUKI recommended product or Specification		Note
Grease	SUZUKI Super Grease A	P/No.: 99000–25011	☞ / ☞

NOTE

Required service material is also described in the following.
“Front Door Window Components”
“Rear Door Window Components”

Security and Locks

General Description

Key Coding Construction

S7RW0A9601001

Key Usage and Identification

Key is used for ignition and door lock cylinders. Key is cut on both edges to make them reversible.
Key identification is obtained from five character key code stamped on key code tag. Using this key code, key code cutting combination can be determined from a code list (available to owners of key cutting equipment from suppliers).

Rear End Door Opener System Description

S7RW0A9601002

Rear end door opener system consists of rear end door opener switch (1), rear end door opener relay (in BCM), rear end door lock assembly (2) and BCM (3).
Rear end door opener system is activated by pushing rear end door opener switch after all doors are unlocked by manual door switch, key cylinder switch, keyless entry transmitter or request switch (5) (if equipped).
When rear end door opener switch pushed rear end door opener relay is ON. Then, BCM releases latch of rear end door lock assembly from striker and rear end door can be opened.
In addition, in case that rear end door cannot be opened by rear end door opener switch, rear end door can be opened by emergency lever (4) in rear end door lock assembly.

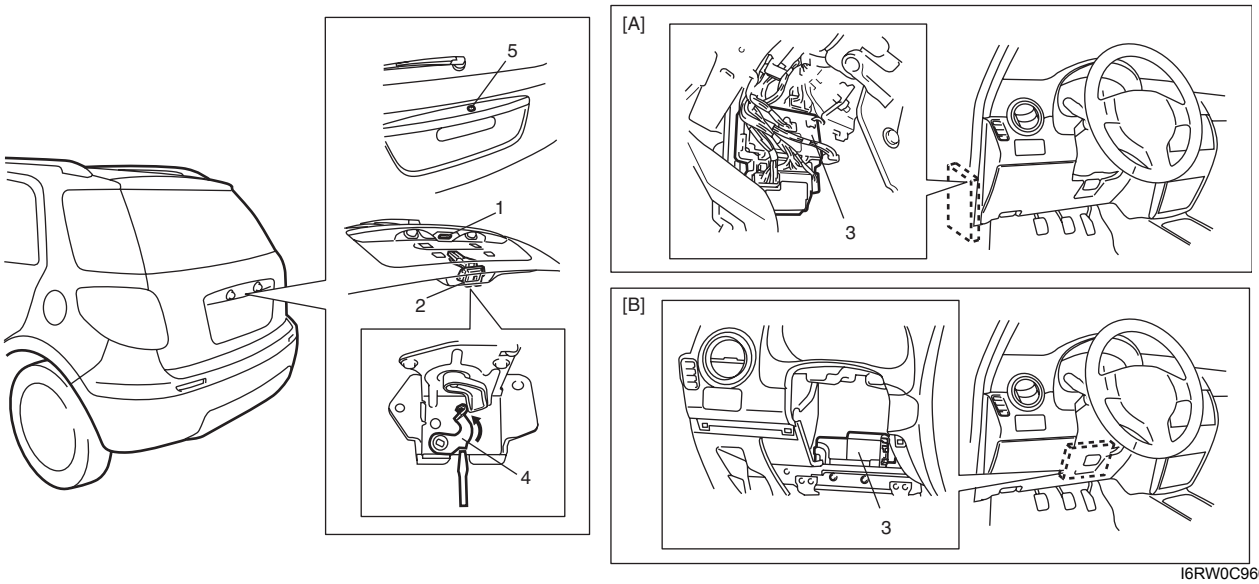

I6RW0C960001-01

[A]:	Junction block with BCM type
[B]:	Junction block without BCM type

Component Location

Power Door Lock and Keyless Entry System Component Location

S7RW0A9603001

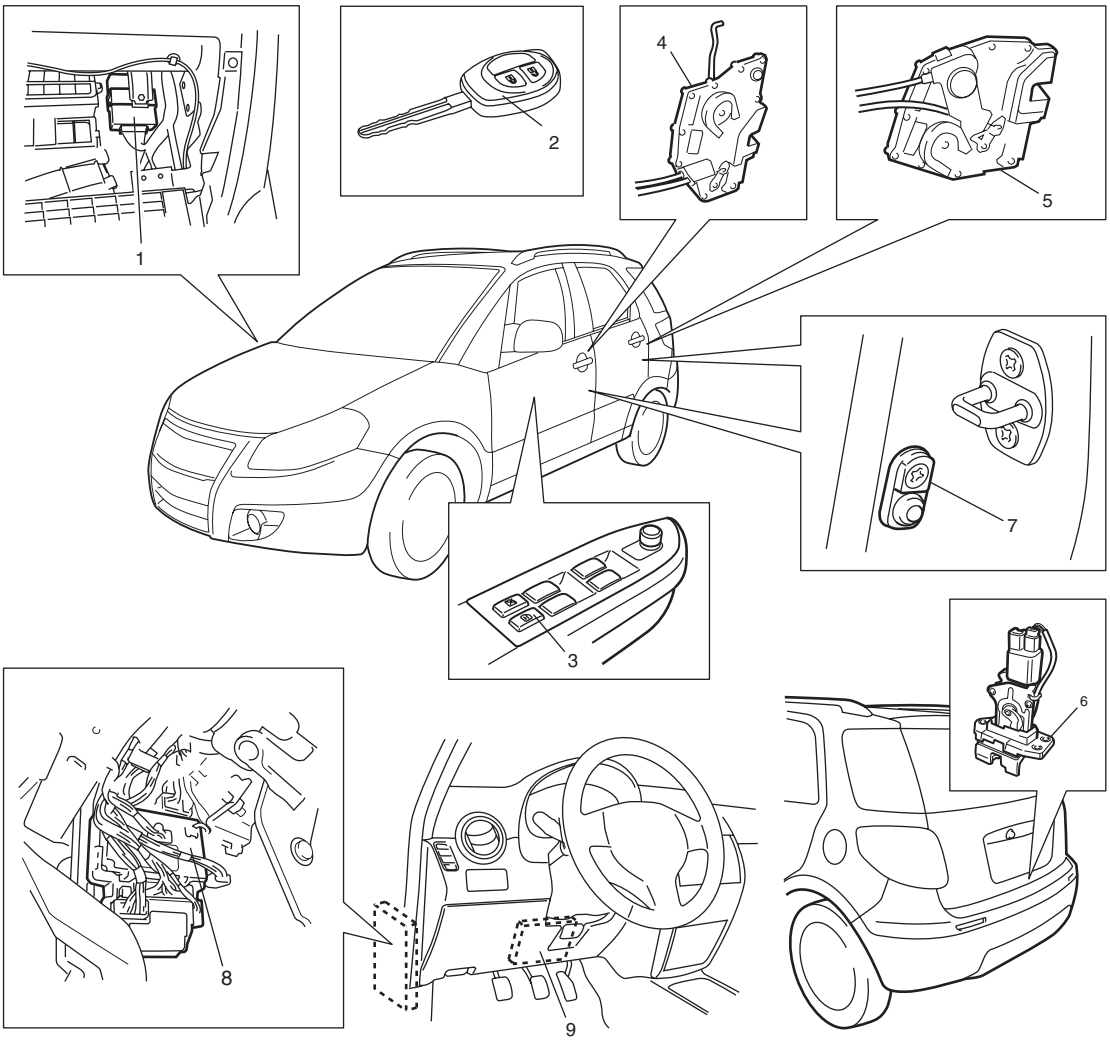

I6RW0C960002-01

1. Keyless entry receiver	4. Front door actuator	7. Door switch
2. Transmitter	5. Rear door actuator	8. BCM (junction block with BCM type)
3. Power door lock switch	6. Rear end door actuator	9. BCM (junction block without BCM type)

Diagnostic Information and Procedures

Power Door Lock System Symptom Diagnosis

S7RW0A9604001

NOTE

- **Use of SUZUKI scan tool makes it easy to check whether a faulty condition is on the input side or output side of BCM. For checking procedure, refer to "Diagnosis Using Output Test Function of SUZUKI Scan Tool" under "Scan Tool Data in Section 10B".**
- **Check each part in the order from the top of the following list.**

Condition	Possible cause	Correction / Reference Item
All door can not be locked / unlocked by all of switches	Circuit fuse blown	*Replace fuse and check for short circuit.*
	Wiring or grounding faulty	*Repair circuit.*
	BCM faulty	*Replace after making sure that none of above parts is faulty.*
All door can not be locked / unlocked by only power door lock switch	Circuit fuse blown	*Replace fuse and check for short circuit.*
	Power door lock switch faulty	*Check power door lock switch referring to "Power Door Lock Switch Inspection".*
	Wiring harness connected to power door lock switch faulty	*Repair.*
	Wiring or grounding faulty	*Repair circuit.*
	BCM faulty	*Replace after making sure that none of above parts is faulty.*
All door can not be locked / unlocked by only key cylinder switch	Circuit fuse blown	*Replace fuse and check for short circuit.*
	Key cylinder switch faulty	*Check key cylinder switch referring to "Door Key Cylinder Switch Inspection".*
	Wiring or grounding faulty	*Repair circuit.*
	BCM faulty	*Replace after making sure that none of above parts is faulty.*
Only one door can not be locked / unlocked	Power door lock actuator faulty	*Check actuator referring to "Power Door Lock Actuator Inspection".*
	Wiring harness connected to applicable door lock actuator faulty	*Repair.*
	BCM faulty	*Replace after making sure that none of above parts is faulty.*

Power Door Lock System Operation Inspection

S7RW0A9604002

1) Check the following operation:
   a) Turn the driver side key cylinder is turned LOCK once, check all doors lock.
   b) Turn the driver side door key cylinder is turned UNLOCK position once, check all doors unlock.
   c) With all doors unlocked, insert key in key cylinder of driver side door and turn it to lock side, turn it again to lock side within 3 seconds and check that no door can be opened even when door lock knob is moved to unlock side (dead lock function, if equipped).

If malfunction is found, go to "Power Door Lock System Symptom Diagnosis".

Keyless Entry System Symptom Diagnosis

S7RW0A9604003

NOTE

- **Confirm that power door lock system is in good condition before referring to the following possible causes.**
- **Check each part in the order from the top of the following list.**

Condition	Possible cause	Correction / Reference Item
All door can not be locked / unlocked by only keyless entry transmitter	Transmitter battery dead	*Replace battery referring to "Replacement of Transmitter Battery (Other than Keyless Start Model)".*
	Door switch faulty	*Check door switch referring to "Door Switch (Front / Rear Door) Inspection in Section 9C" and/or "Rear End Door Switch Inspection (Hatchback) in Section 9C".*
	Transmitter faulty	*Replace transmitter.*
	Key reminder switch in ignition switch faulty	*Check ignition switch referring to "Ignition Switch Inspection in Section 9C".*
	Wiring or grounding faulty	*Repair circuit.*
	Keyless entry receiver faulty	*Check keyless entry receiver referring to "Keyless Entry Receiver and Its Circuit Inspection"*
	BCM faulty	*Replace after making sure that none of above parts is faulty.*
Turn signal lights can not be flashed when doors are locked / unlocked by keyless entry transmitter	Turn signal and hazard warning relay faulty	*Check turn signal and hazard warning relay referring to "Turn Signal and Hazard Warning Relay Inspection in Section 9B".*
	Wiring or grounding faulty	*Repair circuit.*
	BCM faulty	*Replace after making sure that none of above parts is faulty.*
Interior light does not light when doors are unlocked by keyless entry transmitter	Wiring or grounding faulty	*Repair circuit.*
	BCM faulty	*Replace after making sure that none of above parts is faulty.*
Hazard warning lights do not light when doors are locked/unlocked by keyless entry transmitter	Turn signal and hazard warning relay faulty	*Check turn signal and hazard warning relay referring to "Turn Signal and Hazard Warning Relay Inspection in Section 9B".*
	Wiring or grounding faulty	*Repair circuit.*
	BCM faulty	*Replace after making sure that none of above parts is faulty.*
Transmitter code can not be programmed to BCM	Door switch faulty	*Check door switch referring to "Door Switch (Front / Rear Door) Inspection in Section 9C" and/or "Rear End Door Switch Inspection (Hatchback) in Section 9C".*
	Keyless entry receiver faulty	*Check keyless entry receiver referring to "Keyless Entry Receiver and Its Circuit Inspection"*
	Key reminder switch in ignition switch faulty	*Check ignition switch referring to "Ignition Switch Inspection in Section 9C".*
	Wiring or grounding faulty	*Repair circuit.*
	BCM faulty	*Replace after making sure that none of above parts is faulty.*

Keyless Entry System Operation Inspection

S7RW0A9604004

NOTE

When performing the this inspection, make sure to have any of the door once opened/ closed after the ignition key has been removed from the ignition key cylinder.

1) Confirm that power door lock system operates normally, refer to “Power Door Lock System Operation Inspection”.
2) All doors are closed and unlocked.
3) Check the following operation:
   a) Push “lock” button (1) on transmitter (2) or remote controller, and check all doors lock and hazard waning lights flash once.
   b) Push “unlock” button (3) on transmitter (2) or remote controller, and check all doors unlock and hazard waning lights flash twice and interior light turns on several seconds with the interior light switch in the middle position.

If malfunction is found, go to “Keyless Entry System Symptom Diagnosis”.

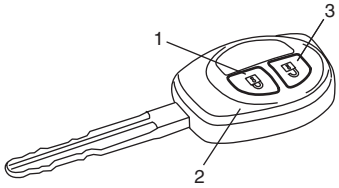

I4RS0B960013-01

Door Lock Function of Keyless Start System Symptom Diagnosis (If Equipped)

S7RW0A9604005

Proceed to “Keyless Start System Symptom Diagnosis in Section 10E” in case that doors cannot be locked and unlocked by operating the request switch at the outside door handle.

Rear End Door Opener System Symptom Diagnosis

S7RW0A9604006

NOTE

- **Use of SUZUKI scan tool makes it easy to check whether a faulty condition is on the input side or output side of BCM. For checking procedure, refer to “Diagnosis Using Output Test Function of SUZUKI Scan Tool” under “Scan Tool Data in Section 10B”.**
- **Check each part in the order from the top of the following list.**

Condition	Possible cause	Correction / Reference Item
Rear end door can not be opened	Circuit fuse blown	*Replace fuse and check for short circuit.*
	Rear end door opener switch faulty	*Check rear end door opener switch referring to “Rear End Door Opener Switch Inspection (Hatchback Model)”.*
	Rear end door actuator faulty	*Check rear end door actuator referring to “Power Door Lock Actuator Inspection”.*
	Wiring or grounding faulty	*Repair circuit.*
	BCM faulty	*Replace after making sure that none of above parts is faulty.*

Rear End Door Opener System Operation Inspection

S7RW0A9604007

1) Unlock all doors by using manual lock switch, keyless entry transmitter, or key cylinder switch.
2) Make sure that latch of rear end door is released from striker when rear end door opener switch is pushed.
   If malfunction is found, go to “Rear End Door Opener System Symptom Diagnosis”.

Repair Instructions

Front Door Lock Assembly Components

S7RW0A9606001

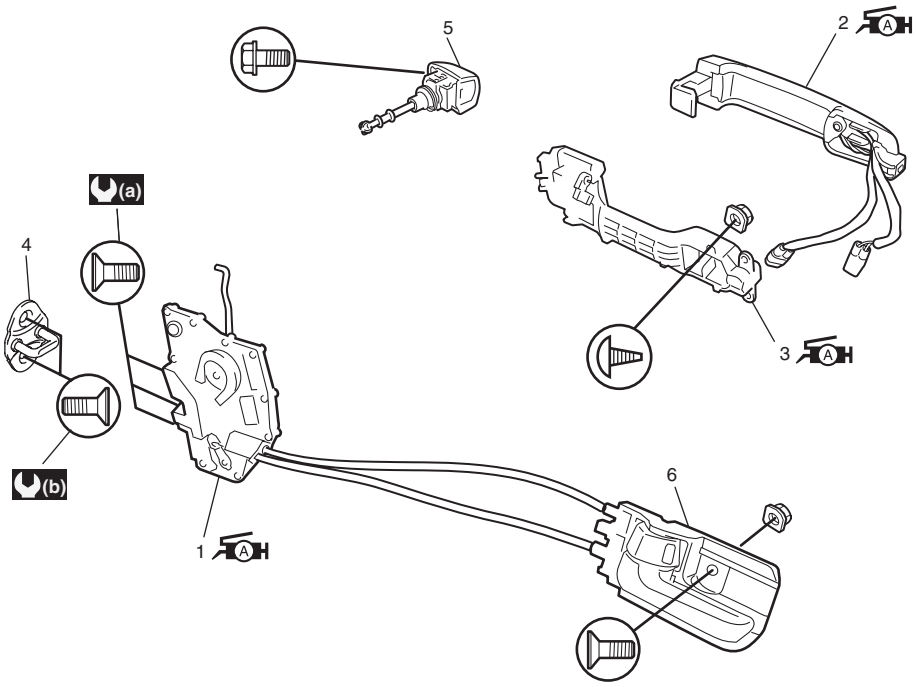

I5RW0A960003-01

1. Front door latch assembly : Apply lithium grease 99000-25011 to sliding and rotating parts and spring if any.	5. Key cylinder
2. Outside handle assembly : Apply lithium grease 99000-25011 to sliding part.	6. Inside handle bezel
3. Outside handle frame : Apply lithium grease 99000-25011 to sliding part and spring.	(a) : 5.0 N·m (0.5 kgf-m, 4.0 lb-ft)
4. Latch striker	(b) : 10 N·m (1.0 kgf-m, 7.5 lb-ft)

Front Door Lock Assembly Removal and Installation

S7RW0A9606002

Removal

1) Remove door trim and door sealing cover referring to step 1) to 6) of “Front Door Glass Removal and Installation in Section 9E”.
2) Raise window all the way up.
3) Remove door sash (1).

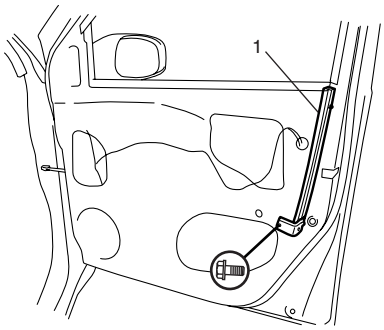

I4RS0A960007-01

4) Remove key cylinder mounting bolt (1), and then remove key cylinder (2).

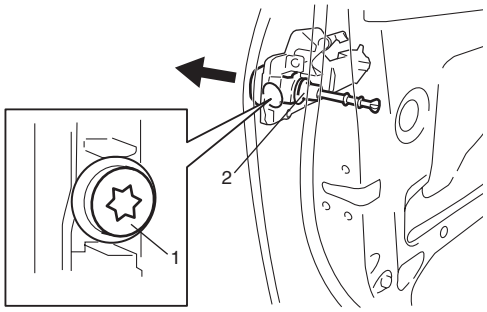

I4RS0B960005-01

5) Disconnect door opening control rod (1) from outside handle.
6) Disconnect door lock motor lead wire at coupler.
7) Remove door latch screws (2) and remove door lock assembly (3).

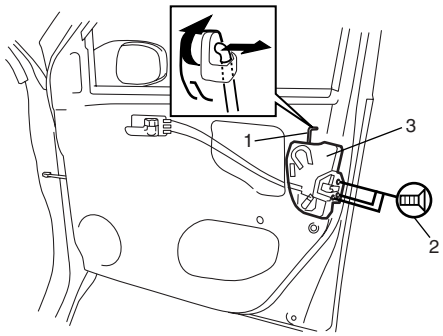

I4RS0A960006-01

Installation

Reverse removal procedure to install front door lock assembly noting the following instructions.

- Apply grease to sliding parts of door latch assembly.

  : Grease 99000–25011 (SUZUKI Super Grease A)

- Tighten door latch screws to specified torque.

Tightening torque
Door latch screw (a): 5.0 N·m (0.5 kgf-m, 4.0 lb-ft)

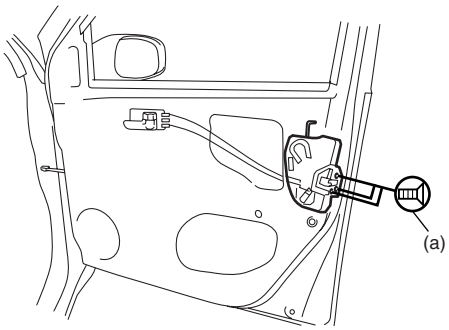

I4RS0A960008-01

- Move door latch striker (2) up or down so its center aligns with the center of groove “A” on the door lock assembly (1) as shown.
  Striker should be moved vertically and placed level.
  Do not adjust door lock (1).

Tightening torque
Door latch striker screw (a): 10 N·m (1.0 kgf-m, 7.5 lb-ft)

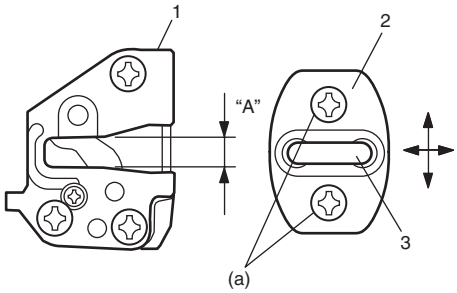

I5RW0A960005-01

3. Shaft

- Move door latch striker (1) sideways to adjust door outer panel surface (2) flush with rear door outer panel or body outer panel surface (3) as shown.

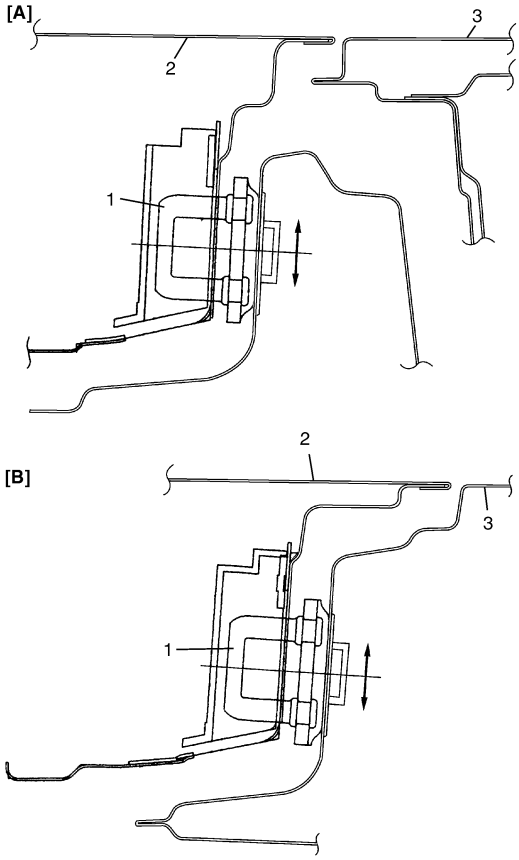

I5RW0A960012-01

[A]: Front door	[B]: Rear door

- Install door trim referring to “Front Door Glass Removal and Installation in Section 9E”.

Front Door Lock Assembly Inspection

S7RW0A9606003

- Check that door open and closes smoothly and properly.
- Check that door stops in the secondary latched position properly (preventing door from opening freely) and that door closed completely in the fully latched position.
- Adjust door latch striker position referring to “Front Door Lock Assembly Removal and Installation”, if necessary.

Power Door Lock Switch Inspection

S7RW0A9606004

Check for continuity between terminals at each switch position. If check result is not as specified, replace switch.

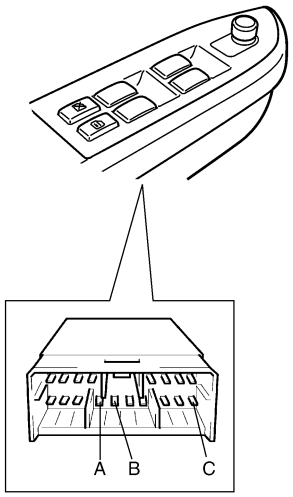

Switch \ Terminal	A	B	C
LOCK	○		○
OFF			
UNLOCK	○	○	

I5JB0A960007-01

1. Power door lock switch

Door Key Cylinder Switch Inspection

S7RW0A9606005

1) Remove front door trim referring to Step 1) to 3) of “Front Door Glass Removal and Installation in Section 9E”
2) Check for continuity between terminals at each switch position. If check result is not as specified, replace door lock assembly.

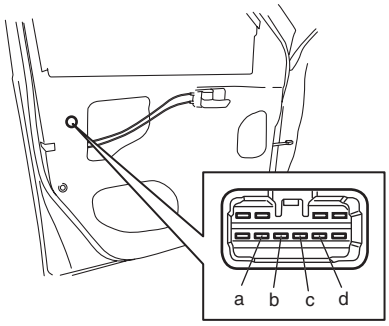

Right side switch terminals	b	c	d
Left side switch terminals	c	b	a
LOCK	○		○
OFF			
UNLOCK	○	○	

I4RS0B960007-01

Power Door Lock Actuator Inspection

S7RW0A9606006

1) Remove door trim from door panel.
   For front door, refer to Step 1) to 3) of “Front Door Glass Removal and Installation in Section 9E”.
   For rear door, refer to Step 1) to 3) of “Rear Door Glass Removal and Installation in Section 9E”.
   For rear end door, refer to Step 1) of “Rear End Door Assembly Removal and Installation (Hatchback Model) in Section 9J” (Hatchback model).
   For trunk lid, refer to Step 1) of “Trunk Lid Removal and Installation (Sedan Model) in Section 9J” (Sedan model).
2) Disconnect power door lock actuator coupler.
3) Connect battery positive (+) and negative (–) terminals to the door lock actuator terminals (a, b, c, d) as shown in figure.
   If it does not operate as specified in the following table, replace door lock assembly.

Front door

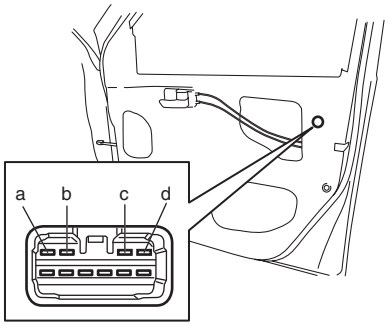

Right side switch terminals			d	b
Left side switch terminals			a	c
Lock	→	Unlock	⊕	⊖
Unlock	→	Lock	⊖	⊕

I7RW01960005-01

Rear door

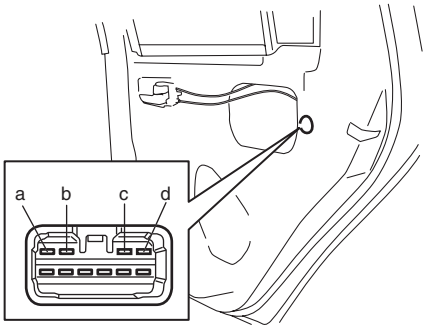

Right side switch terminals			a	c
Left side switch terminals			d	b
Lock	→	Unlock	⊕	⊖
Unlock	→	Lock	⊖	⊕

I7RW01960006-02

Rear end door

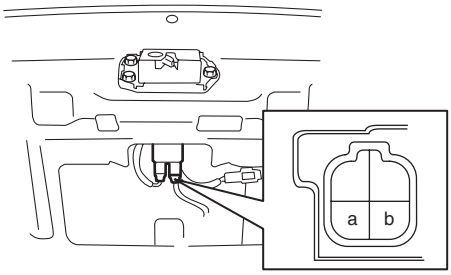

			a	b
Lock	→	Unlock	⊕	⊖

I5RW0C960003-03

Trunk lid

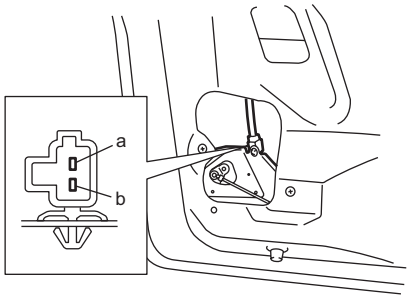

			a	b
Lock	→	Unlock	⊕	⊖

I8RW01960001-01

Rear Door Lock Assembly Components

S7RW0A9606007

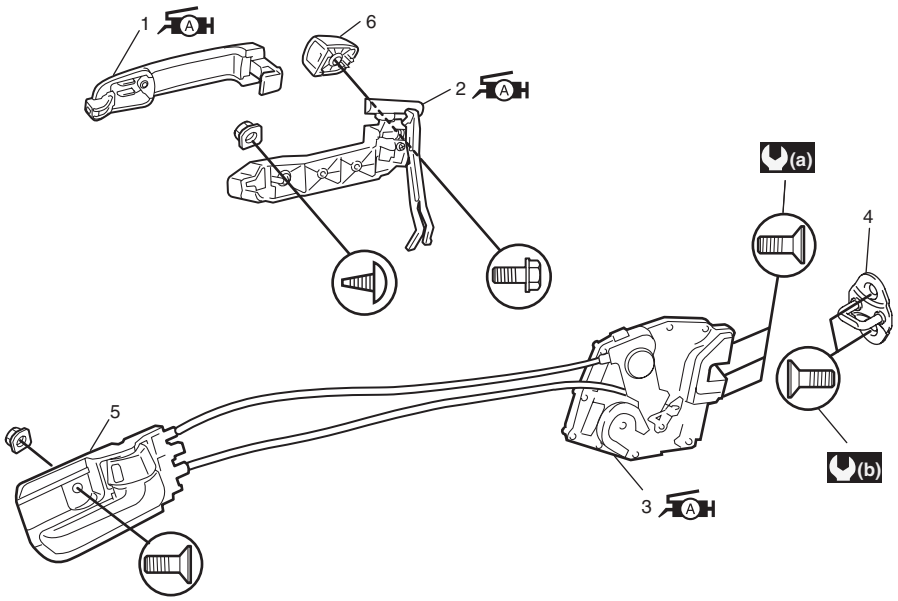

I5RW0A960006-01

1. Outside handle : Apply lithium grease 99000-25011 to sliding part.	4. Latch striker	(a) : 5.0 N·m (0.5 kgf-m, 4.0 lb-ft)
2. Outside handle frame : Apply lithium grease 99000-25011 to sliding part and spring.	5. Inside handle bezel	(b) : 10 N·m (1.0 kgf-m, 7.5 lb-ft)
3. Rear door latch assembly : Apply lithium grease 99000-25011 to sliding part.	6. Out side handle cap	

Rear Door Lock Assembly Removal and Installation

S7RW0A9606008

Removal

1) Remove rear door glass referring to “Rear Door Glass Removal and Installation in Section 9E”.
2) Disconnect door lock motor lead wire.
3) Remove door latch mounting screws (1) and remove door latch assembly (2).

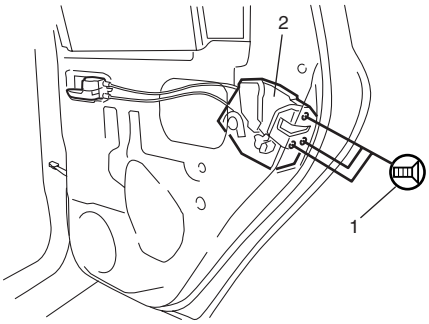

I4RS0A960013-01

Installation

Reverse removal procedure to install rear door lock assembly referring to the following instruction and “Front Door Lock Assembly Removal and Installation”.

- Tighten door latch screw to specified torque.

  Tightening torque
  Door latch screw (a): 5.0 N·m (0.5 kgf-m, 4.0 lb-ft)

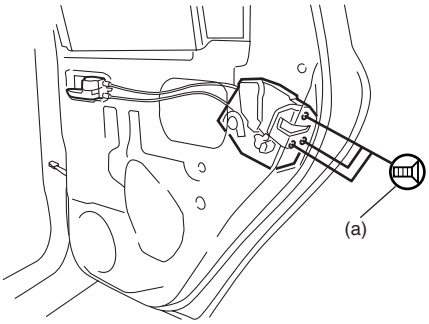

I4RS0A960014-01

- Install door trim referring to “Rear Door Glass Removal and Installation in Section 9E”.

Rear Door Lock Assembly Inspection

S7RW0A9606009

- Check that door opens and closes smoothly and properly.
- Check that door stops in the secondary latched position properly (preventing door from opening freely) and that door closes completely in the fully latched position.
- Adjust door latch striker position referring to “Front Door Lock Assembly Removal and Installation”, if necessary.

Rear End Door Lock Assembly Components (Hatchback Model)

S7RW0A9606010

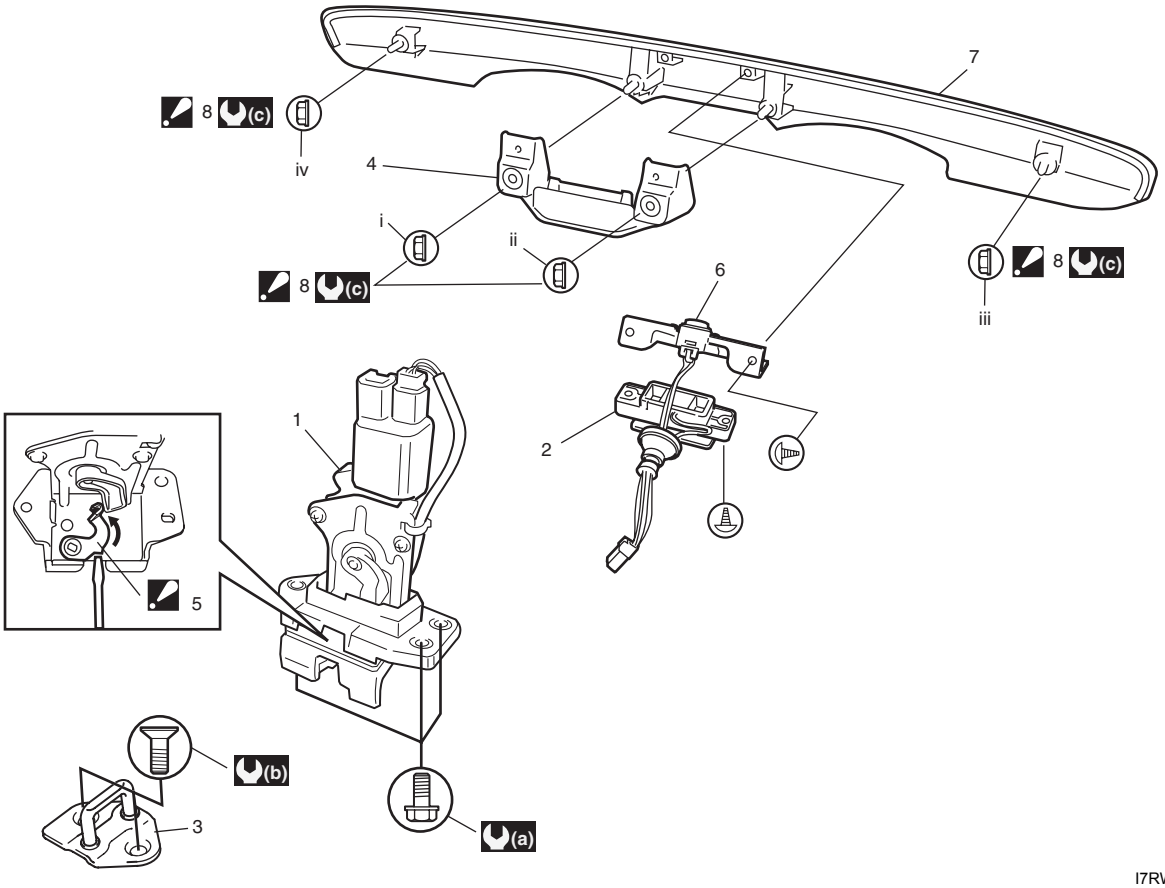

I7RW01960007-04

1. Rear end door latch assembly (rear end door switch is built in this assembly)	7. Rear end door license garnish
2. Rear end door opener switch	8. Rear end door license garnish mounting nut :Tighten nuts in such order as indicated in figure.
3. Latch striker	(a) : 10 N·m (1.0 kgf-m, 7.5 lb-ft)
4. Door handle	(b) : 23 N·m (2.3 kgf-m, 17.0 lb-ft)
5. Emergency lever : Rear end door is unlocked by pushing emergency lever with flat head driver if rear end door lock can not be released by door opener switch.	(c) : 5.5 N·m (0.55 kgf-m, 4.0 lb-ft)
6. Rear end door request switch (if equipped)	a, b, c, d: Rear end door license garnish mounting nut : Tightening order: a→b→c→d

Rear End Door Lock Assembly Removal and Installation (Hatchback Model)

S7RW0A9606011

Removal

1) Remove door trim (1) from rear end door panel (2).

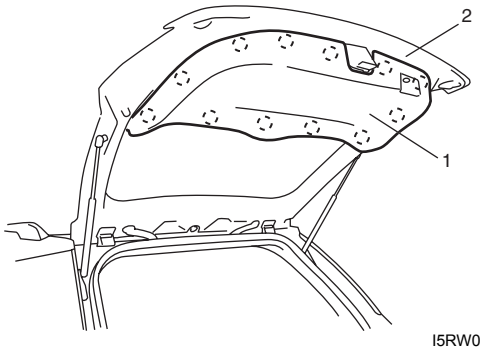

I5RW0A960008-02

2) Disconnect door lock motor lead wire.
3) Loosen door latch bolts (1) and remove door latch assembly (2).

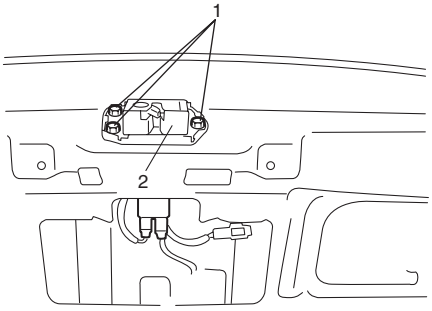

I4RS0A960017-01

Installation

Reverse removal procedure to install rear end door lock assembly noting the following instruction.

- Tighten rear end door latch bolt to specified torque.

  Tightening torque
  Rear end door latch bolt (a): 10 N·m (1.0 kgf-m, 7.5 lb-ft)

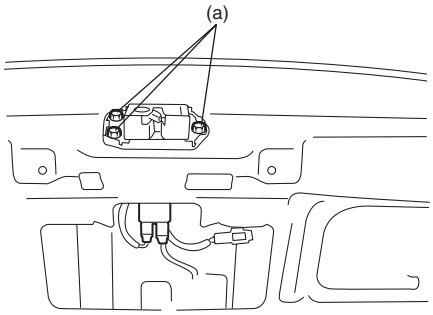

I4RS0A960018-01

- Adjust door latch striker so that its center aligns with the center of groove in door latch base.

  Tightening torque
  Rear end door striker screw (a): 23 N·m (2.3 kgf-m, 17.0 lb-ft)

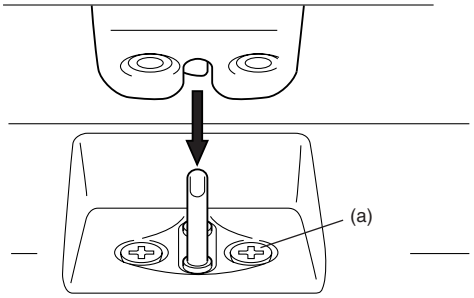

I4RS0A960019-01

Rear End Door Lock Assembly Inspection (Hatchback Model)

S7RW0A9606012

- Check that door opens and closes smoothly and properly.
- Check that door stops in the secondary latched position properly (preventing door from opening freely) and that door closes completely in the fully latched position.
- Adjust door latch striker position referring to “Front Door Lock Assembly Removal and Installation”, if necessary.

Rear End Door Opener Switch Inspection (Hatchback Model)

S7RW0A9606013

1) Remove rear end door trim.
2) Disconnect rear end door switch coupler.
3) Check that there is continuity between terminals “a” and “b” when rear end door opener switch (1) is pushed.
4) Check that there is no continuity between terminals when rear end door opener switch (1) is not pushed.

If check result is not as specified, replace switch.

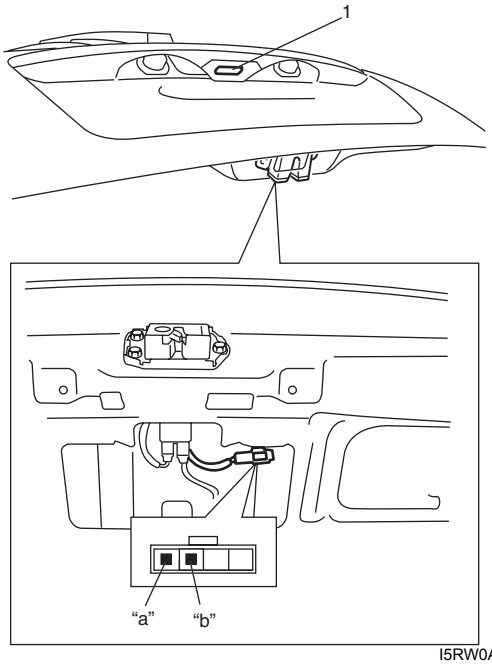

I5RW0A960009-02

Trunk Lid Lock Assembly Components (Sedan Model)

S7RW0A9606019

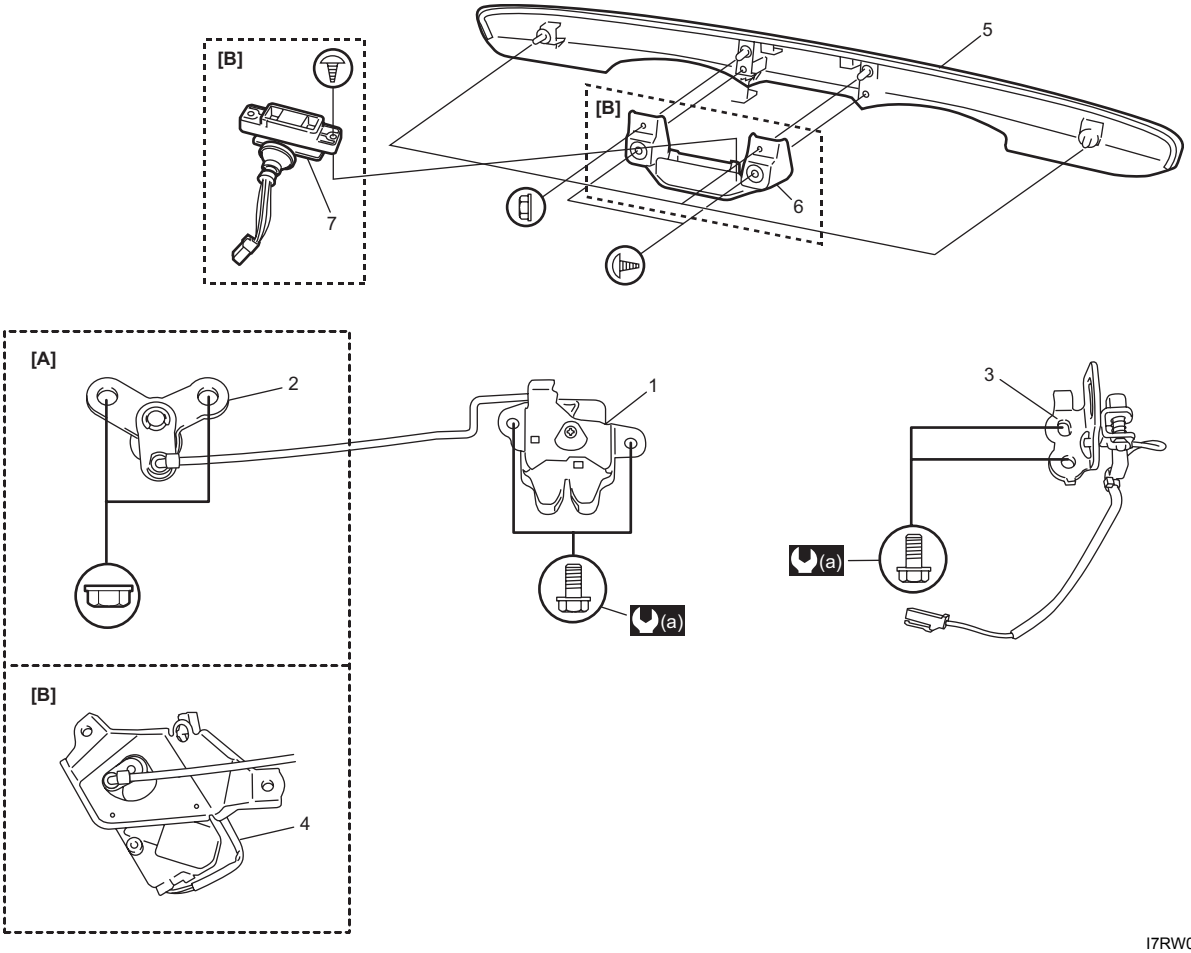

I7RW0A960002-02

1. Trunk lid latch	5. Trunk lid license garnish	[B]: With keyless start model
2. Trunk lid lock cylinder	6. Trunk lid request switch bracket	(a) : 4.5 N·m (0.45 kgf-m, 3.5 lb-ft)
3. Latch striker	7. Trunk lid request switch	
4. Trunk lid actuator	[A]: Without keyless start model	

Trunk Lid Lock Assembly Removal and Installation (Sedan Model)

S7RW0A9606021

Removal

1) Remove trunk lid trim (1) from trunk lid panel (if equipped).

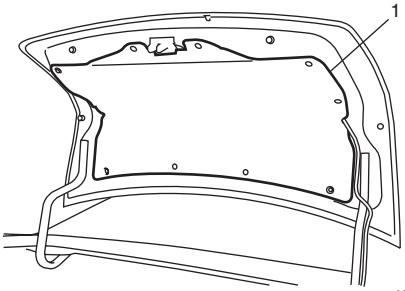

I6RW0B960006-01

2) Disconnect trunk lid latch control rod (1) from trunk lid.
3) (Keyless start model)
   Disconnect trunk lid latch actuator coupler (3).
4) (Keyless start model)
   Remove trunk lid latch actuator (2) from trunk lid.

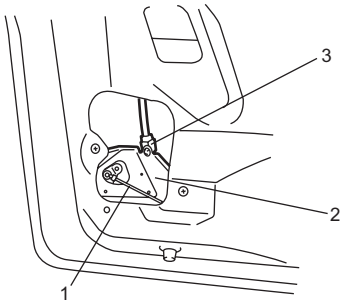

I8RW01960003-01

5) (Non- keyless start model)
   Remove trunk lid lock cylinder (1) from trunk lid.

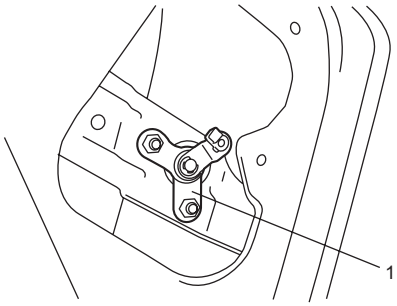

I8RW01960004-01

6) Remove trunk lid latch bolt (1), and then disconnect trunk lid opener wire (2) from trunk lid latch (4).
7) Remove trunk lid latch (4) with trunk lid latch control rod (3).

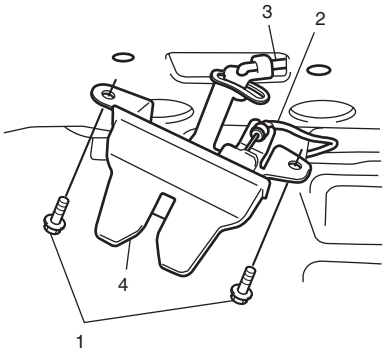

I6RW0B960005-01

Installation

Reverse removal procedure to install trunk lid lock assembly noting the following instruction.

- Tighten trunk lid latch bolt (1) to specified torque.

  Tightening torque
  Trunk lid latch bolt (a): 4.5 N·m (0.45 kgf-m, 3.5 lb-ft)

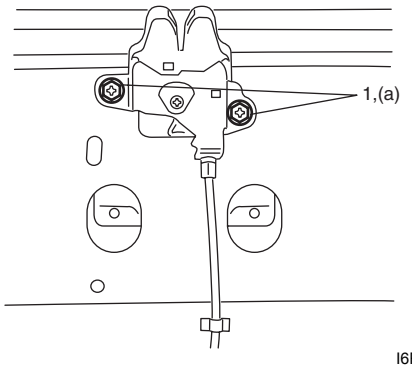

I6RW0B960008-01

- Adjust trunk lid latch striker (1) so that its center aligns with the center of groove in trunk lid latch base (2).

  Tightening torque
  Trunk lid latch striker bolt (a): 4.5 N·m (0.45 kgf-m, 3.5 lb-ft)

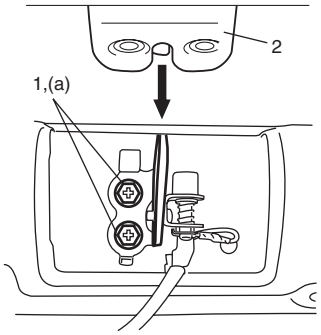

I6RW0B960011-01

Trunk Lid Lock Assembly Inspection (Sedan Model)

S7RW0A9606022

- Check that trunk lid opens and closes smoothly and properly.
- Adjust trunk lid latch striker position referring to “Front Door Lock Assembly Removal and Installation”, if necessary.

Replacement of Transmitter Battery (Other than Keyless Start Model)

S7RW0A9606014

NOTE

For keyless start model, perform “Replacement of Remote Controller Battery in Section 10E” instead of “Replacement of Transmitter Battery (Other than Keyless Start Model)”.

If transmitter becomes unreliable, replace transmitter battery as follows.

1) Remove screw (1) and transmitter cover (2).
2) Remove transmitter (3) from transmitter holder (4).

⚠ CAUTION

Use care not to allow grease or dirt to be attached on the printed circuit board and the battery.

3) With tip of flat blade screwdriver put in slot of transmitter, pry it open.
4) Replace the battery (lithium disc-type CR 1620 or equivalent battery) so its (+) terminal faces “+” mark on transmitter.
5) Fit together transmitter (3) and install it into transmitter holder (4).
6) Install transmitter cover (2) and screw (1).
7) Make sure that door locks can be operated with transmitter.

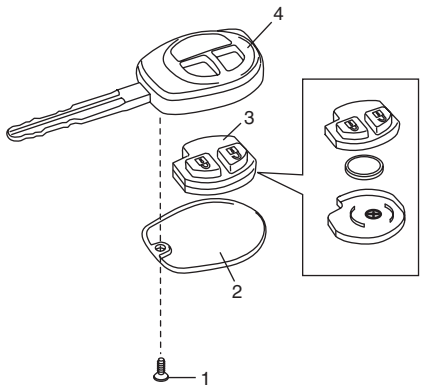

I4RS0B960014-01

NOTE

- **To prevent theft, be sure to break the transmitter before discarding it.**
- **Dispose of the used battery properly according to applicable rules or regulations. Do not dispose of lithium batteries with ordinary household trash.**

Programming Transmitter Code for Keyless Entry System (Other than Keyless Start Model)

S7RW0A9606015

NOTE

- **Three transmitter codes can be registered.**
- **When a new transmitter code is registered, the oldest one will be cleared.**
- **For keyless start model, perform “Registration Procedure for Remote Controller ID Code in Section 10E” instead of “Programming Transmitter Code for Keyless Entry System (Other than Keyless Start Model)”.**

If transmitter or BCM (included in junction block assembly) is replaced or additional transmitter(s) is necessary, program transmitter code(s).

1) Confirm that all doors are closed and ignition key is out of ignition key cylinder.
2) Open driver side door.
3) Turn ignition switch to ON position, and then drawn ignition key from ignition key cylinder within 10 seconds after that.
4) Push and release driver side door switch (1) at 3 times by hand within 20 seconds after removing ignition key from ignition key cylinder.
5) Turn ignition switch to ON position, and then drawn ignition key from ignition key cylinder within 10 seconds after that. All doors automatically lock and unlock once.
   With this, registration mode.
6) Push “UNLOCK” button (2) on transmitter (3) within 20 seconds after Step 5). All doors automatically lock and unlock once.
   With this, code registration is completed.
7) If an additional transmitter, needs to be programed repeat the procedure of Step 1).

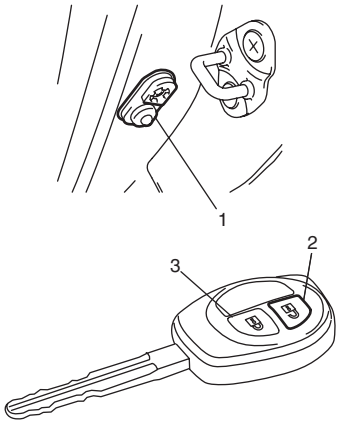

I4RS0B960010-01

Keyless Entry Answer Back Function Change-over Procedure

S7RW0A9606023

Output of keyless entry answer back function can be switched over by performing the following procedure.

1) Confirm that all doors are closed, all doors are unlocked, ignition key is out of ignition key cylinder and interior light switch is in the middle position.
2) Perform Step a) through c) described below within 10 seconds.
   a) Insert ignition key in ignition key cylinder.
   b) Remove ignition key from ignition key cylinder.
   c) Repeat Step a) and b) once.
3) Push “UNLOCK” button on transmitter 3 times within 10 seconds.
4) Interior light flashes once which indicates that answer back function is changed over from A mode to B mode.

NOTE

When answer back function is changed from B mode to A mode, hazard warning lights flashes once.

	Answer back A mode		Answer back B mode	
	LOCK	UNLOCK	LOCK	UNLOCK
Hazard warning light	Flashes once	Flashes twice		
Interior light		Turn on for a while	Flashes once	Turn on for a while

I5RS0C960001-01

Keyless Entry Receiver Removal and Installation

S7RW0A9606024

Removal

1) Disconnect negative cable at battery.
2) Remove grove box or console box referring to Step 6) of “Instrument Panel Removal and Installation in Section 9C”or “Console Box Components in Section 9H”.
3) Disconnect keyless entry receiver coupler.
4) Remove keyless entry receiver (1).

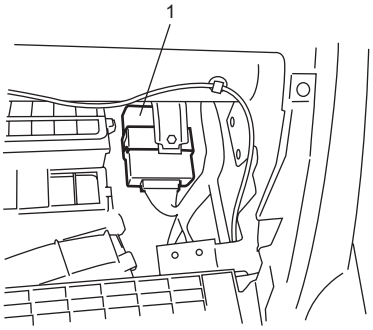

I7RW0A960003-03

Installation

Reverse removal procedure.

Keyless Entry Receiver and Its Circuit Inspection

S7RW0A9606018

1) Check that the voltage between the following terminals and body ground are specifications under each conditions. If check result is not as specified, check applicable circuit for open or short. If circuit is normal, proceed to next step.

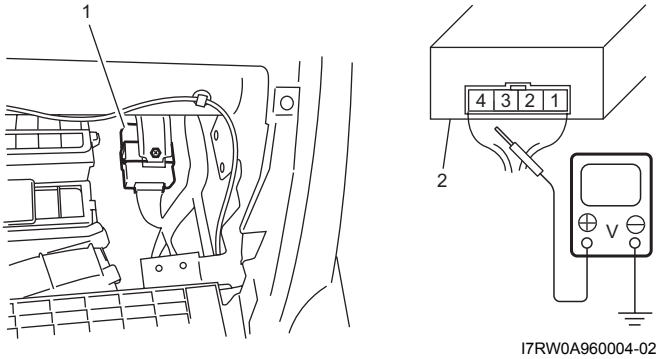

I7RW0A960004-02

1. Keyless entry receiver	2. Keyless entry receiver connector (view from harness side)

Terminal	Circuit	Specification	Condition
1	Power source	Figure [A]	Push “Lock” or “Unlock” button on transmitter.
		0 – 1 V	Except the above-mentioned condition.
3	Lock/Unlock output signal circuit	Figure [A]	Push “Lock” or “Unlock” button on transmitter.
		0 – 1 V	Except the above-mentioned condition.
4	Ground	0 – 1 V	—

Oscilloscope setting
CH1: 2V/DIV
CH2: 2V/DIV
TIME: 200 ms/DIV

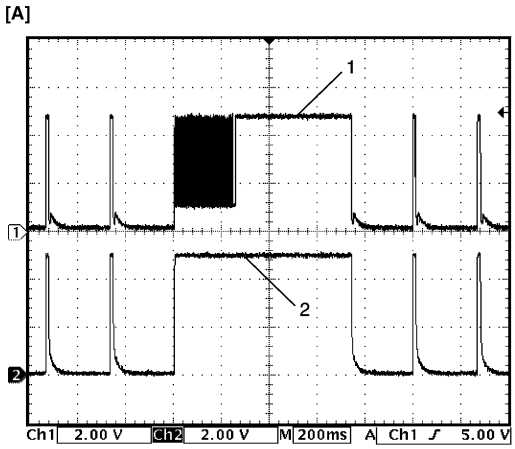

I4RS0A960024-01

1. Lock/Unlock out put signal
2. Power source

1) Recheck keyless entry receiver as follows.
   a) Substitute a known-good keyless entry receiver.
   b) Record key code referring to “Programming Transmitter Code for Keyless Entry System (Other than Keyless Start Model)”.
   c) Recheck keyless entry receiver system.

Specifications

Tightening Torque Specifications

S7RW0A9607001

Fastening part	Tightening torque			Note
	N·m	kgf-m	lb-ft	
Door latch screw	5.0	0.5	4.0	☞ / ☞
Door latch striker screw	10	1.0	7.5	☞
Rear end door latch bolt	10	1.0	7.5	☞
Rear end door striker screw	23	2.3	17.0	☞
Trunk lid latch bolt	4.5	0.45	3.5	☞
Trunk lid latch striker bolt	4.5	0.45	3.5	☞

NOTE

The specified tightening torque is also described in the following.
“Front Door Lock Assembly Components”
“Rear Door Lock Assembly Components”
“Rear End Door Lock Assembly Components (Hatchback Model)”
“Trunk Lid Lock Assembly Components (Sedan Model)”

Reference:
For the tightening torque of fastener not specified in this section, refer to “Fasteners Information in Section 0A”.

Special Tools and Equipment

Recommended Service Material

S7RW0A9608001

Material	SUZUKI recommended product or Specification		Note
Grease	SUZUKI Super Grease A	P/No.: 99000–25011	☞

NOTE

Required service material is also described in the following.
“Front Door Lock Assembly Components”
“Rear Door Lock Assembly Components”

Seats

Diagnostic Information and Procedures

Front Seat Heater Symptom Diagnosis (If Equipped)

S7RW0A9704001

Condition	Possible cause	Correction / Reference Item
Both seat back and cushion do not become hot although seat heater switch is ON position	Wiring or grounding faulty	*Repair.*
	“SEAT HTR” fuse blown	*Replace fuse to check for short.*
	Seat heater switch faulty	*Replace switch.*
	Seat heater circuit in seat back and/or seat cushion faulty	*Replace heater front back and/or heater front cushion.*
Only seat back does not become hot although seat heater switch is ON position	Wiring faulty	*Repair.*
	Seat heater circuit in seat back and/or seat cushion faulty	*Replace heater front back and/or heater front cushion.*
Only seat cushion does not become hot although seat heater switch is ON position	Wiring faulty	*Repair.*
	Seat heater circuit in seat cushion faulty	*Replace heater front cushion.*

Repair Instructions

Front Seat Components

S7RW0A9706001

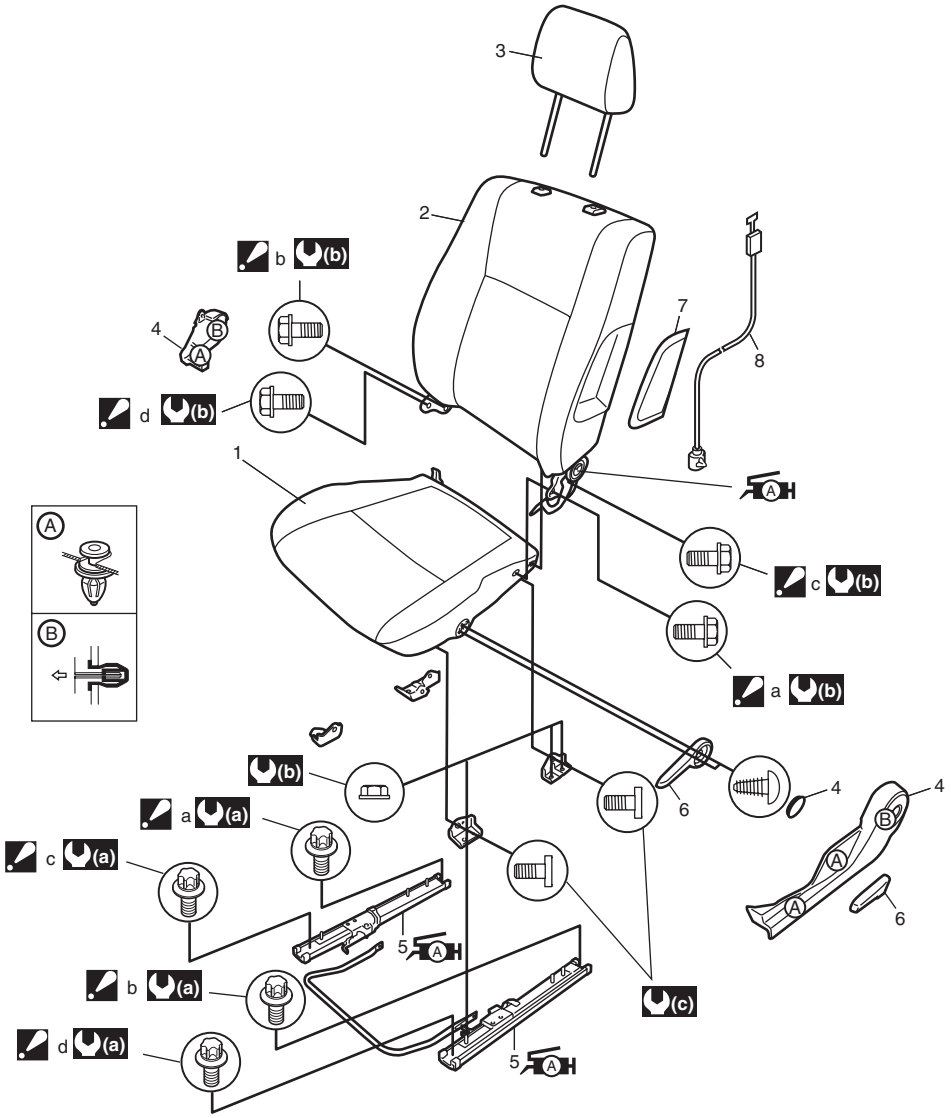

I6RW0C970001-01

1. Seat cushion	7. Side air bag module (if equipped)
A 2. Seat back : Apply lithium grease 99000-25011 to sliding part of reclining.	8. Side air bag harness (if equipped)
3. Headrest	(a) : 23 N·m (2.3 kgf-m, 17.0 lb-ft)
4. Cover	(b) : 35 N·m (3.5 kgf-m, 25.5 lb-ft)
A 5. Seat adjuster : Apply lithium grease 99000-25011 to seat adjuster inside.	(c) : 28 N·m (2.8 kgf-m, 20.5 lb-ft) (Seat lifter type) 35 N·m (3.5 kgf-m, 25.5 lb-ft) (Non seat lifter type)
6. Knob	a, b, c, d: Seat back mounting bolt Seat mounting bolt Tightening order: a → b → c → d

Front Seat Removal and Installation

S7RW0A9706002

⚠ WARNING

Refer to “Air Bag Warning in Section 00”before starting service work.

Removal

1) Disable air bag system referring to “Disabling Air Bag System in Section 8B”.
2) Disconnect seat harness coupler and side air bag coupler, if equipped.
3) Remove 4 mounting bolts to remove seat assembly.
4) Disassemble and repair seat as necessary.

Installation

Reverse removal procedure to install front seat.

- Torque to specifications as shown in “Front Seat Components”.
- Enable air bag system referring to “Enabling Air Bag System in Section 8B”.

Front Seat Heater Switch (Driver and Passenger Side) Inspection (If Equipped)

S7RW0A9706005

1) Confirm that ignition switch is OFF position.
2) Remove console box.
3) Disconnect seat heater switch coupler and remove seat heater switch.
4) Check for continuity between terminals at each switch position as shown below. If check result is not as specified, replace.

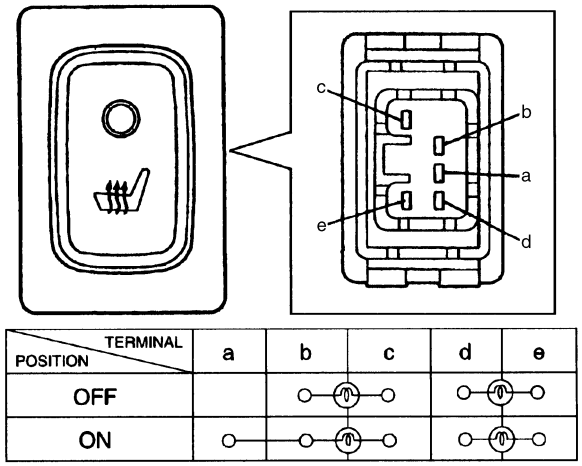

I5RW0B970001-02

Front Seat Heater Wire Inspection (If Equipped)

S7RW0A9706006

1) Confirm that seat heater switch is OFF position.
2) Disconnect coupler of seat heater under the seat cushion.
3) Measure resistance between terminals as shown below. If resistance is out of specification, replace faulty seat cushion and/or seat back including seat heater.

<u>Seat heater circuit resistance</u>
Seat cushion side [A] (between terminal “B” and “C”, between terminal “A” and “C”): 4.7 – 5.7 Ω (at 20 °C, 68 °F)
Seat back side [B] (between terminal “F” and “D”: 10.7 – 13.1 Ω (at 20 °C, 68 °F)

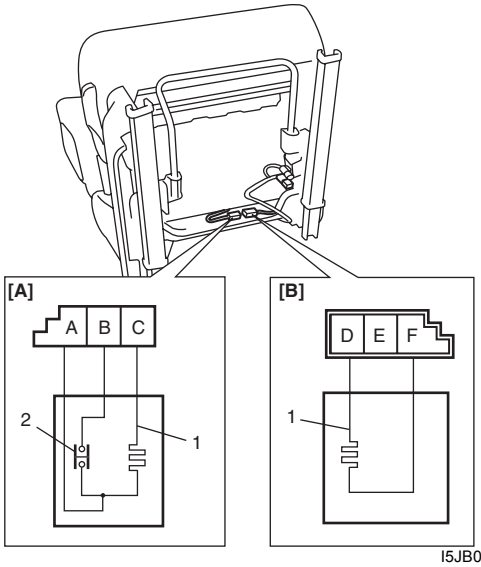

I5JB0A970002-01

1. Heater wire	[A]: Seat cushion side
2. Thermostat	[B]: Seat back side

Rear Seat Components

S7RW0A9706003

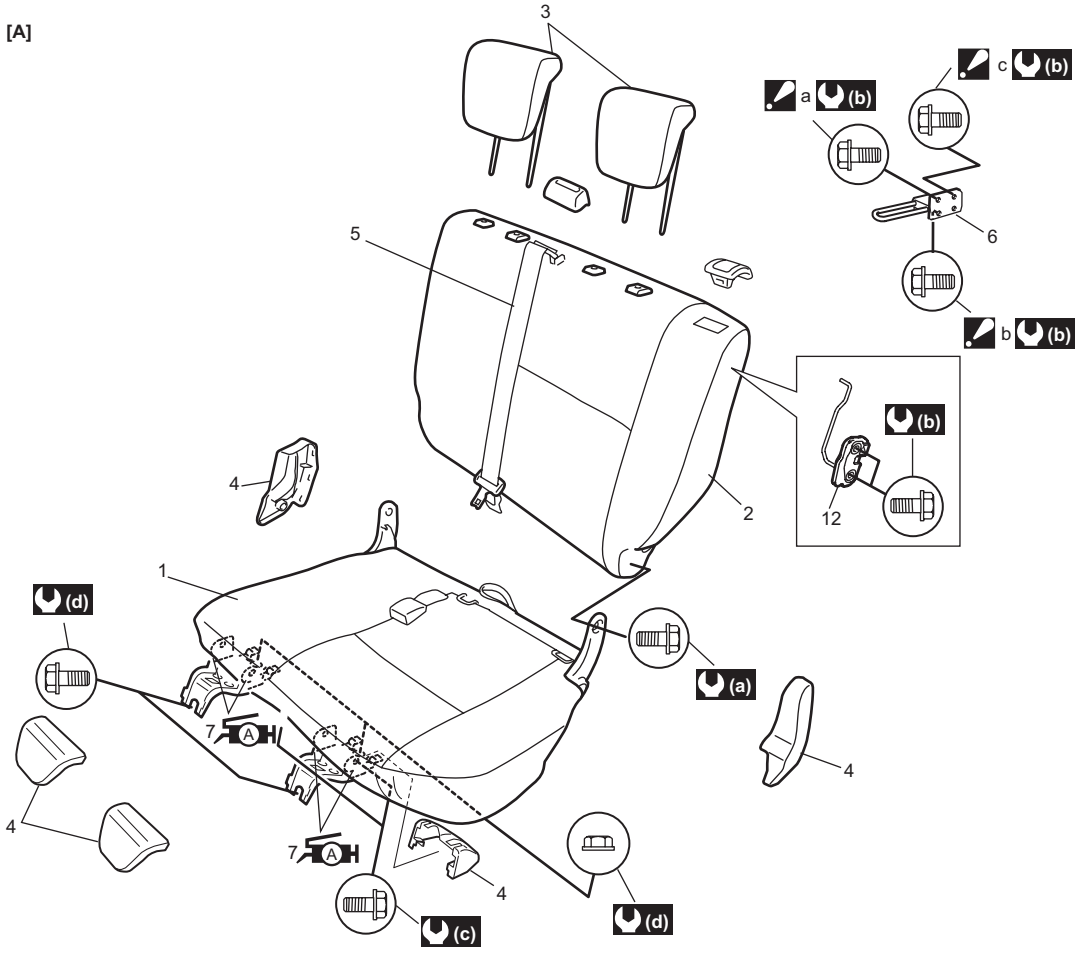

I7RW0A970001-02

[B]

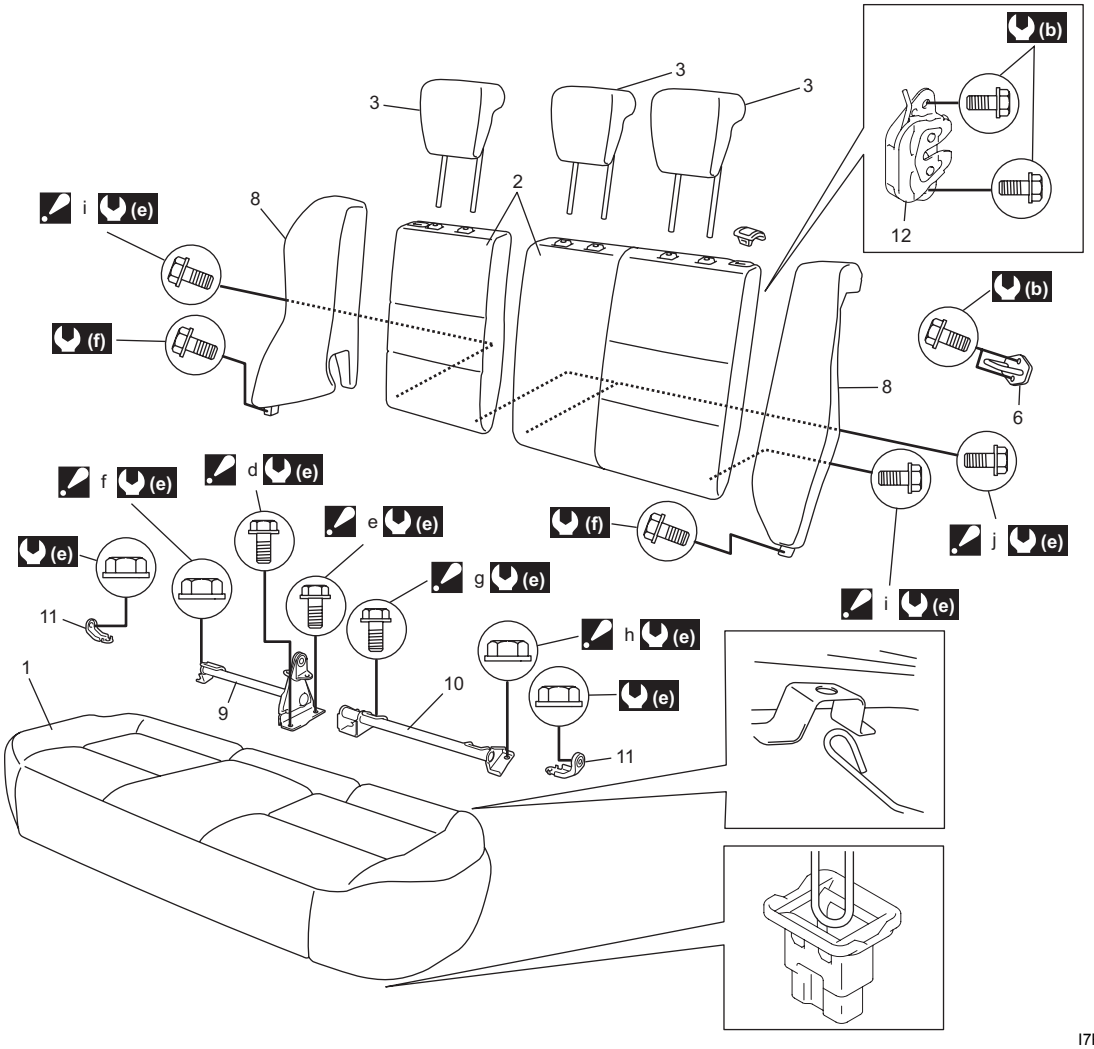

I7RW0A970002-01

[A]: Hatchback model	11. Rear seat side hinge
[B]: Sedan model	12. Rear seat back lock
1. Seat cushion	(a) : 35 N·m (3.5 kgf-m, 25.5 lb-ft)
2. Seat back	(b) : 23 N·m (2.3 kgf-m, 17.0 lb-ft)
3. Head rest (if equipped)	(c) : 25 N·m (2.5 kgf-m, 18.0 lb-ft)
4. Cover	(d) : 45 N·m (4.5 kgf-m, 32.5 lb-ft)
5. Rear center seat belt (if equipped)	(e) : 43 N·m (4.3 kgf-m, 31.5 lb-ft)
6. Seat back striker	(f) : 5.5 N·m (0.55 kgf-m, 4.0 lb-ft)
A 7. Rear cushion leg : Apply lithium grease to 99000-25011 to cushion leg.	a, b, c: Seat back striker mounting bolt : Tightening order (Left side): a→b→c : Tightening order (Right side): b→a→c
8. Rear seat side back	d, e, f: Rear seat center hinge mounting bolt : Tightening order: d→e→f
9. Rear seat center hinge	g, h: Child anchorage bracket mounting bolt : Tightening order: g→h
10. Child anchorage bracket	i, j: Seat back mounting bolt : Tightening order: i→j

Rear Seat Removal and Installation

S7RW0A9706004

Hatchback model

Removal

1) Fold rear seat back forward.
2) Remove seat mounting bolts and nuts to remove seat assembly.
3) Disassemble and repair seat as necessary.

Installation

Reverse removal procedure to install rear seat.

- Torque to specifications in “Rear Seat Components”.

Sedan model

Removal

1) Remove seat cushion.
2) Remove rear side sill scuffs referring to Step 3) of “Floor Carpet Removal and Installation in Section 9H”.
3) Remove rear seat side back.
4) Remove seat back.
5) Disassemble and repair seat as necessary.

Installation

Reverse removal procedure to install rear seat.

- Torque to specifications in “Rear Seat Components”.
- When installing seat cushion, align seat cushion hook with seat back bracket.

Specifications

Tightening Torque Specifications

S7RW0A9707001

NOTE

The specified tightening torque is also described in the following.
“Front Seat Components”
“Rear Seat Components”

Reference:

For the tightening torque of fastener not specified in this section, refer to “Fasteners Information in Section 0A”.

Special Tools and Equipment

Recommended Service Material

S7RW0A9708001

NOTE

Required service material is also described in the following.
“Front Seat Components”
“Rear Seat Components”

Interior Trim

Repair Instructions

Floor Carpet Removal and Installation

S7RW0A9806001

Removal

1) Remove front seat and rear seat referring to “Front Seat Removal and Installation in Section 9G” and “Rear Seat Removal and Installation in Section 9G”.
2) Remove seat belt lower anchor bolts (front and rear).
3) Remove center pillar inner lower trims (3), side sill scuffs (1) (front and rear), front pillar lower trims (2), back panel trim (4), rear quarter lower trims (5).

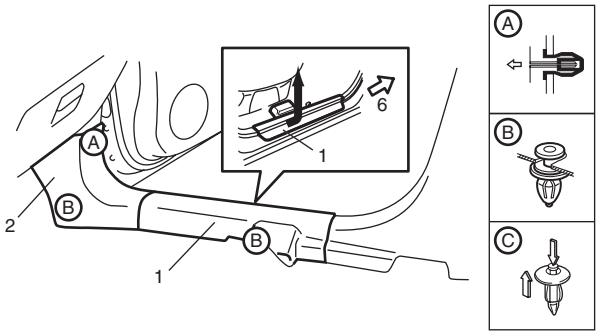

[A]

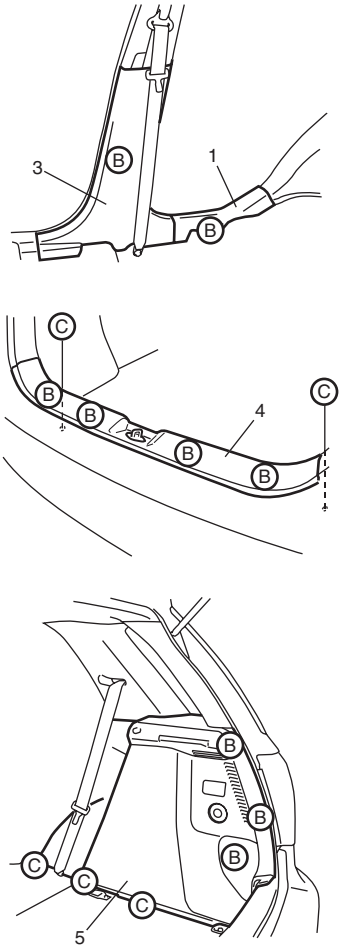

I6RW0B980001-02

[B]

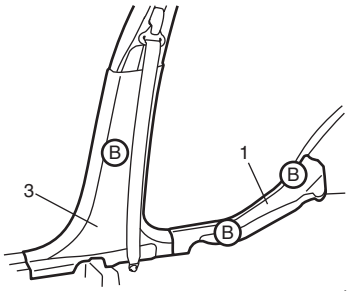

I6RW0B980002-02

[A]: Hatchback model	6. Forward
[B]: Sedan model	

4) Remove console box referring to “Console Box Components”.
5) Remove floor carpet.

Installation

Reverse removal sequence to install front floor carpet, noting the following instruction.

- For tightening torque of rear seat mounting bolt, refer to “Rear Seat Components in Section 9G”.
- For tightening torque of front seat mounting bolt, refer to “Front Seat Components in Section 9G”.
- For tightening torque of seat belt lower anchor bolt, refer to “Front Seat Belt Components in Section 8A” and “Rear Seat Belt Components in Section 8A”.

Head Lining Removal and Installation

S7RW0A9806002

⚠ WARNING

Refer to "Air Bag Warning in Section 00" before starting service work.

Removal

1) Remove sun visor (1).

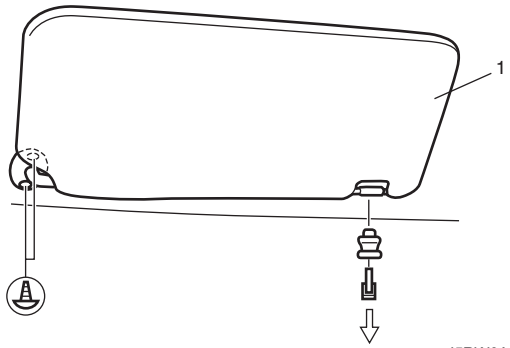

I5RW0A980001-01

2) Remove dome lights of front (1) and center (2).

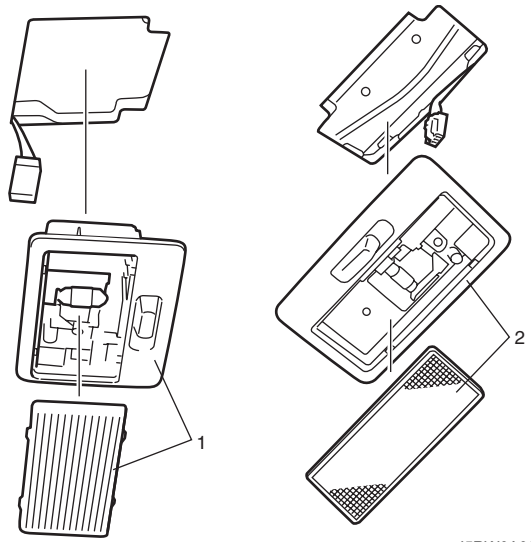

I5RW0A980002-01

3) For hatchback model, remove front pillar upper trims (1), center pillar inner lower trims (3), rear side sill scuffs (2), center pillar inner upper trims (4), back panel trim (5), rear quarter lower trims (6) and rear quarter upper trims (7).

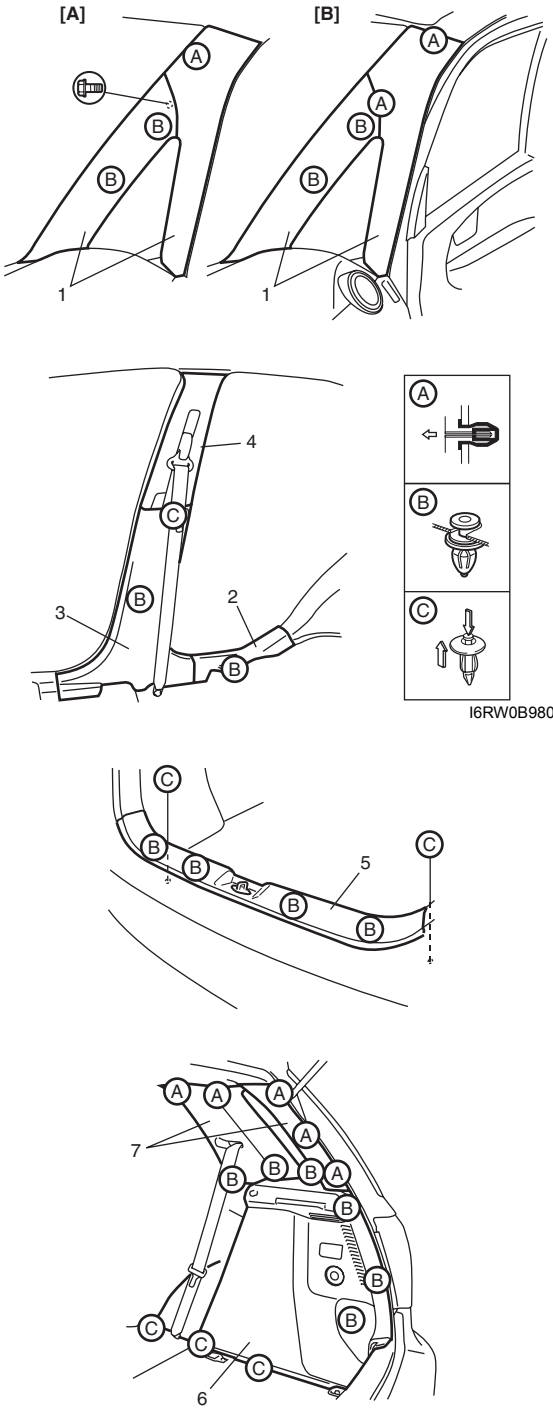

I6RW0B980003-01

I6RW0B980004-01

[A]: With curtain air bag	[B]: Without curtain air bag

4) For sedan model, remove front pillar upper trims (1), center pillar inner lower trims (3), rear side sill scuffs (2), center pillar upper trims (4), side backs (6) and rear pillar inner trims (5).

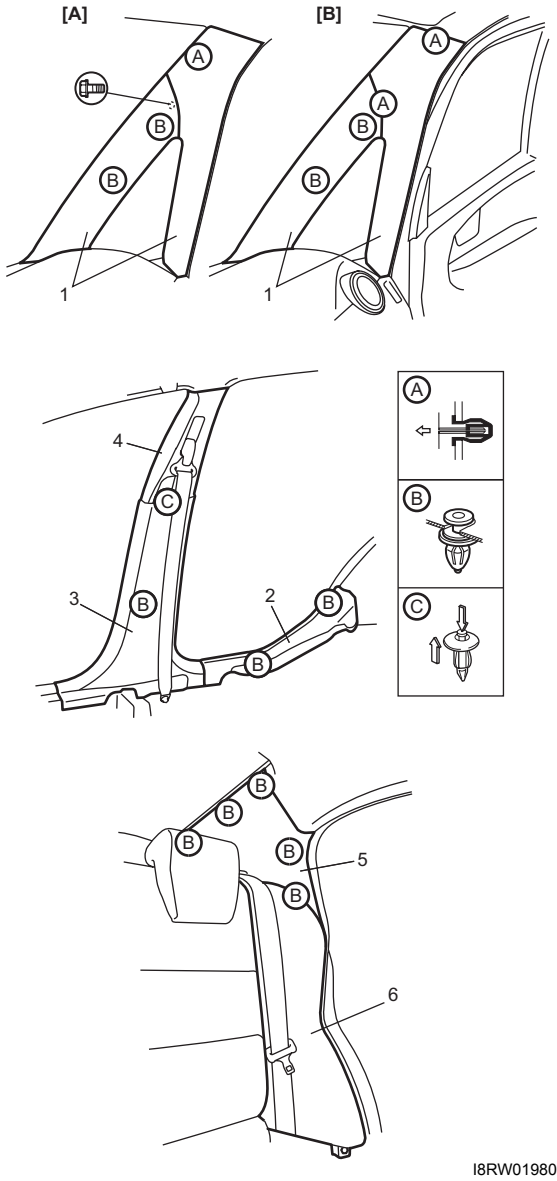

[A]: With curtain air bag	[B]: Without curtain air bag

5) Remove assistant grip (1).
6) Remove head lining clips (2) at rear end and remove head lining (3).

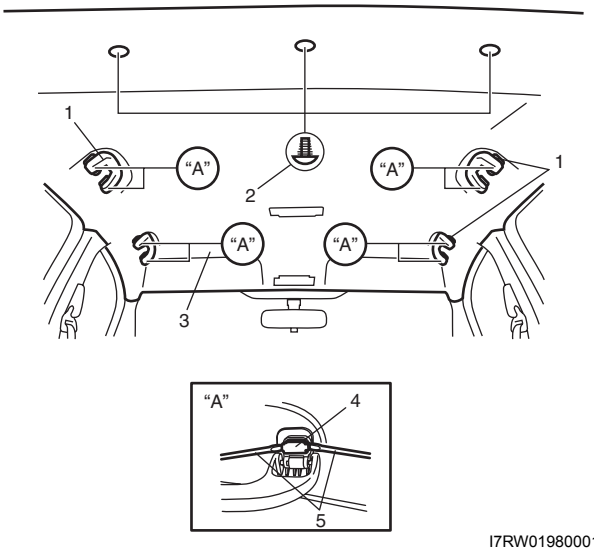

4. Clip	5. Flat head driver

Installation

Reverse removal procedure noting the following.

- Fix sun visor clip (1) first and adjust head lining in position and fix three clips (2) at rear end.
- Tighten bolt and screw to specified torque.

Tightening torque
Sun visor screw (a): 4 N·m (0.4 kgf-m, 3.0 lb-ft)

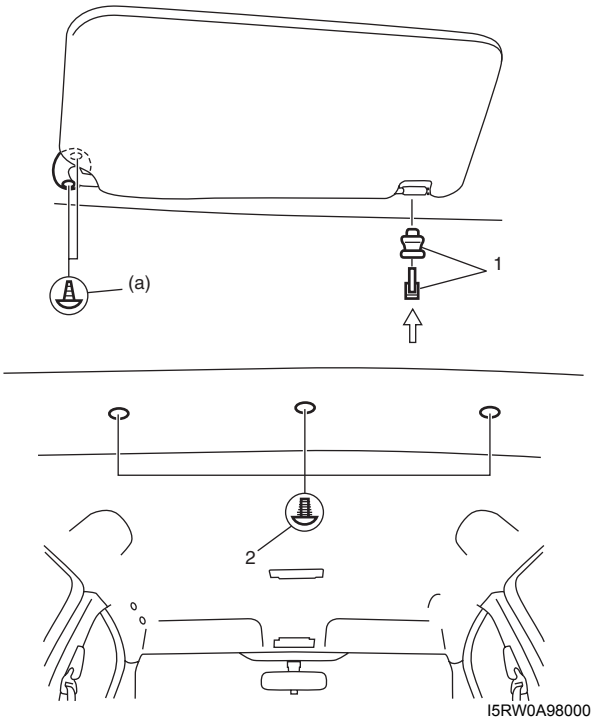

- Tighten rear seat bolt referring to "Rear Seat Components in Section 9G"

Console Box Components

S7RW0A9806003

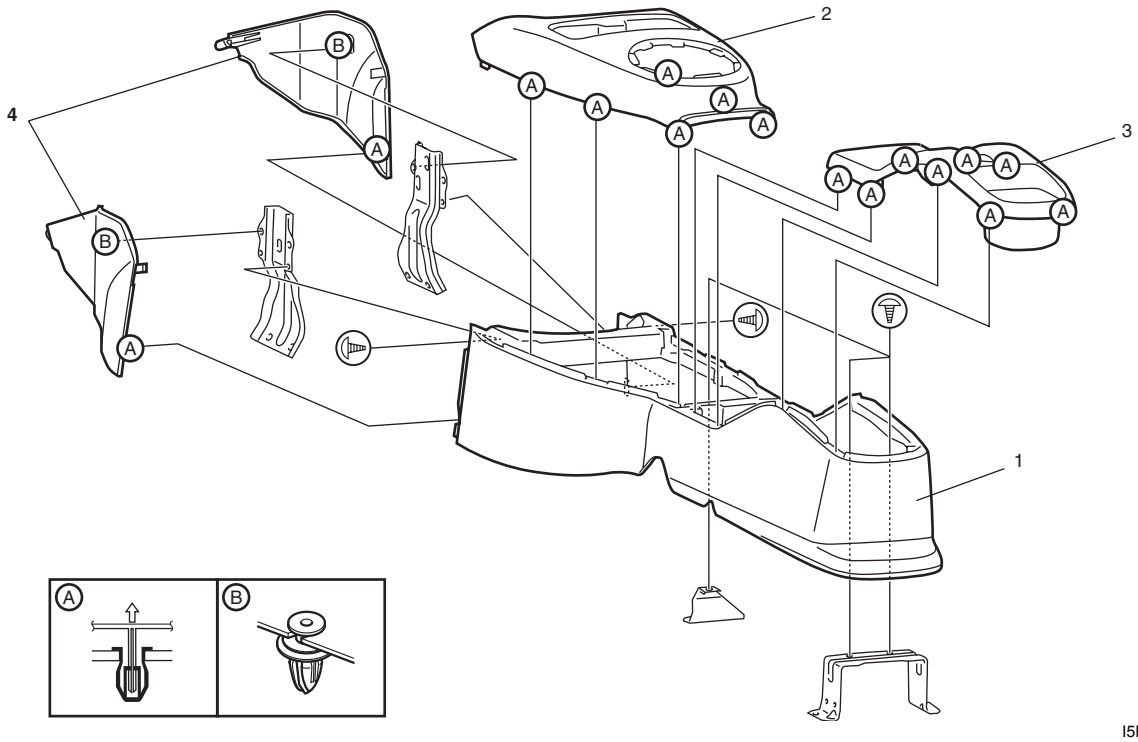

I5RW0A980007-02

1. Console box	3. Rear console box garnish
2. Front console box garnish	4. Console side cover

Specifications

Tightening Torque Specifications

S7RW0A9807001

Fastening part	Tightening torque			Note
	N·m	kgf-m	lb-ft	
Sun visor screw	4	0.4	3.0	☞

Reference:
For the tightening torque of fastener not specified in this section, refer to “Fasteners Information in Section 0A”.

Hood / Fenders / Doors

Repair Instructions

Hood Removal and Installation

S7RW0A9A06001

Removal

⚠ CAUTION

Place cloth to prevent body from any damage.

1) Remove hood silencer (4).
2) Disconnect window washer hose (1) from hood.
3) Remove 4 mounting bolts (3) to detach hood (2).

Installation

Reverse removal procedure noting the following.

- Apply sealant to contact face “A” of hood hinge. Specified sealant.

  “A”: Sealant 99000–31110 (SUZUKI Bond No.1215)

- Adjust hood lock position if necessary referring to “Hood Inspection and Adjustment”.

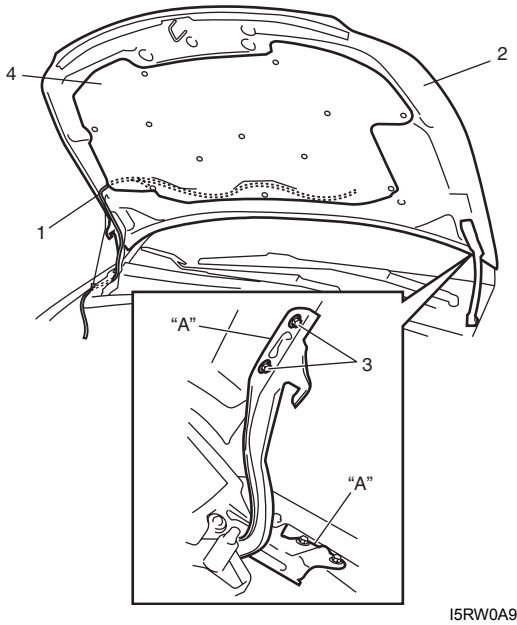

I5RW0A9A0001-01

Hood Inspection and Adjustment

S7RW0A9A06002

Inspection

- Check that hood opens and closes smoothly and properly. Lubricate if necessary.
- Check that hood stops in the secondary latched position properly (preventing hood from opening freely) and that hood closes completely in the fully latched position.
- Adjust hood locks position, if necessary.

Adjustment

Adjust the following point:

- Hood position adjustment.
  Fore-and-aft and right-and-left adjustment.
  Adjust hood clearance by loosening hood mounting bolts. Refer to “Panel Clearance in Section 9K”.
- Vertical adjustment
  If only one side (right or left) of hood is not level with front fender, make it level by tightening or loosening hood cushion (1).

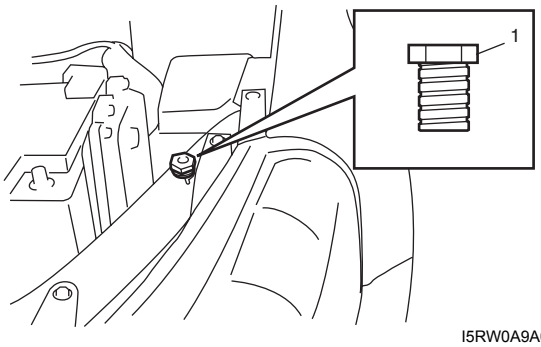

I5RW0A9A0002-01

- Hood lock position adjustment
  a. Loosen hood lock bolts.
  b. Adjust hood lock height position so the hood is locked without looseness.
  c. Tighten hood latch bolts to specified torque.

     Tightening torque
     Hood latch bolt (a): 10 N·m (1.0 kgf-m, 7.5 lb-ft)

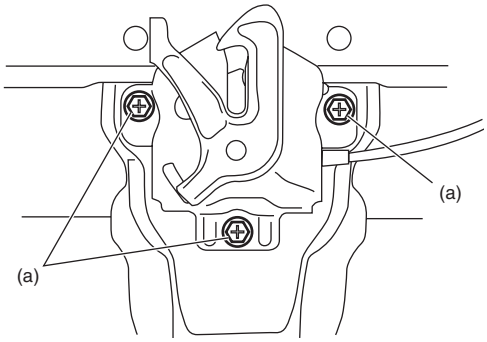

I5RW0A9A0003-01

  d. Make sure the hood is locked smoothly and securely.

Front Fender Components

S7RW0A9A06003

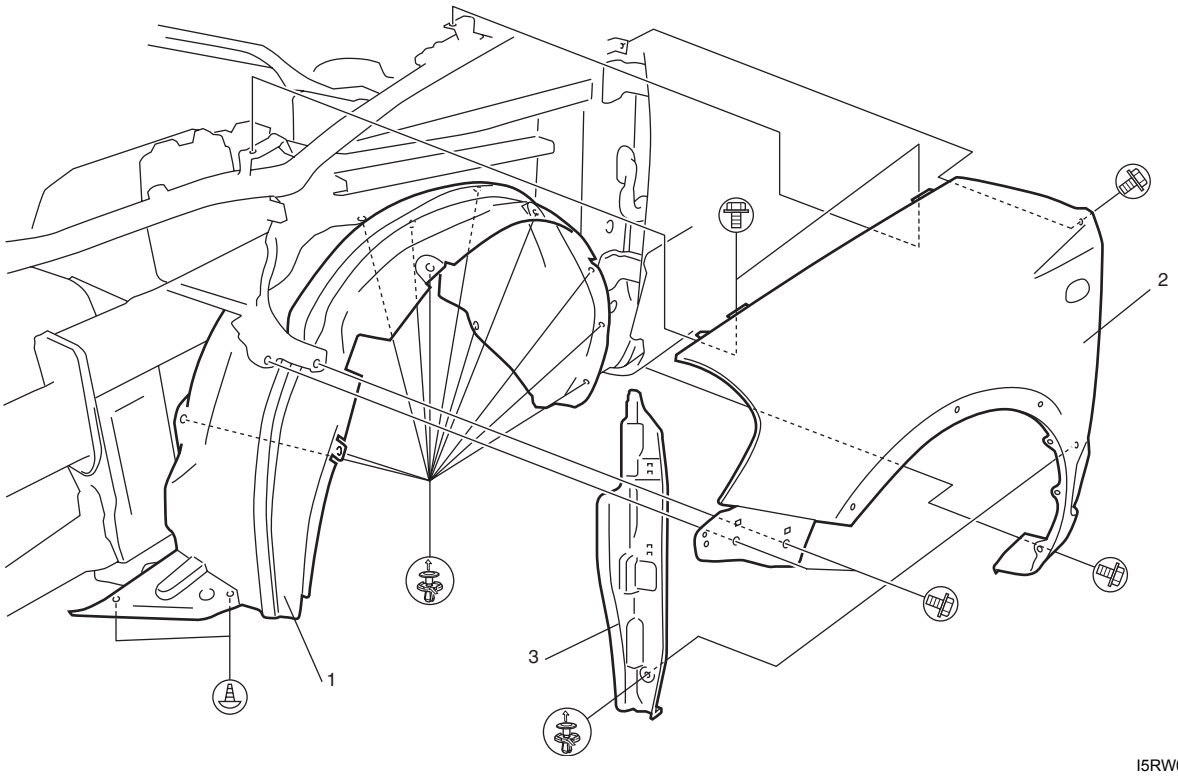

I5RW0A9A0004-01

1. Front fender lining	2. Front fender	3. Front fender cover

Front Fender Removal and Installation

S7RW0A9A06004

Removal

1) Remove side sill splash guard and front fender splash guard (if equipped) referring to “Splash Guard Removal and Installation (If Equipped) in Section 9M”.
2) Remove front fender lining.
3) Remove front bumper referring to “Front Bumper and Rear Bumper Components in Section 9K”.
4) Remove headlight assembly referring to “Headlight Housing Removal and Installation in Section 9B”.
5) Disconnect connector from side turn signal light (if equipped).
6) Remove front fender cover.
7) Remove front fender.

Installation

Reverse removal procedure to install front fender noting the following instruction.

- If paint on fender bolt is peeled off, be sure to apply paint again.
- Adjust panel clearance referring to “Panel Clearance in Section 9K”.

Front Door Assembly Components

S7RW0A9A06005

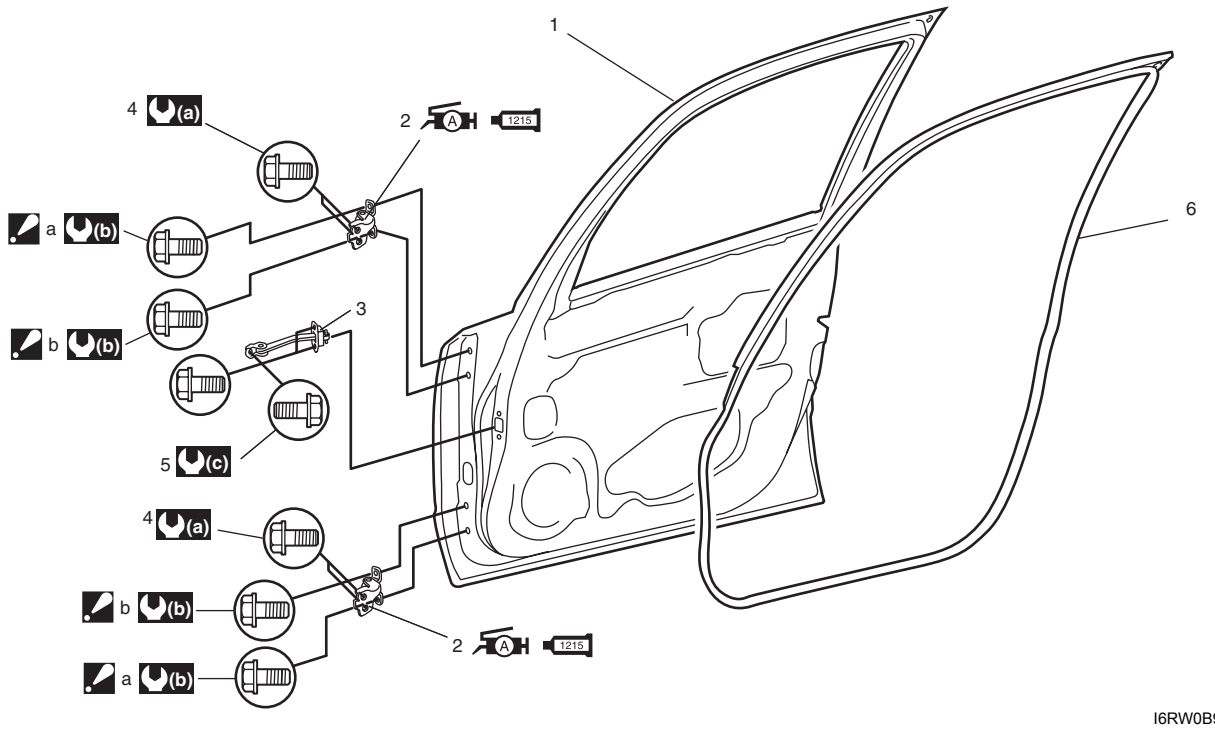

I6RW0B9A0002-01

1. Door panel	5. Door open stopper bolt	(c) : 21 N·m (2.1 kgf-m, 15.5 lb-ft)
1215 2. Door hinge : Apply lithium grease 99000-25011 to rotating part. : Apply sealant 99000-31110 to contact face.	6. Front door opening weather-strip	a, b: Front door hinge bolt (door side) Loosen and tightening order: a→b
3. Door open stopper	(a) : 27 N·m (2.7 kgf-m, 19.5 lb-ft)	
4. Front door hinge bolt (body side)	(b) : 23 N·m (2.3 kgf-m, 17.0 lb-ft)	

Front Door Assembly Removal and Installation

S7RW0A9A06006

Removal

1) Remove front fender referring to “Front Fender Removal and Installation”.
2) Disconnect door harness lead wires at each coupler.
3) Remove door open stopper (1).

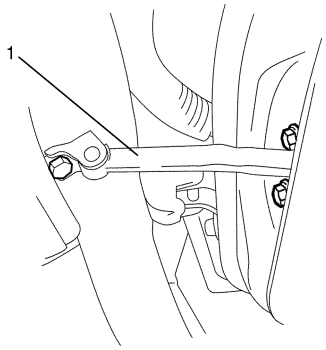

I4RS0A9A0005-01

4) Support door panel (1) using a jack (2) with rags (3) and a piece of wood (4) placed between jack (2) and panel (1) as shown.

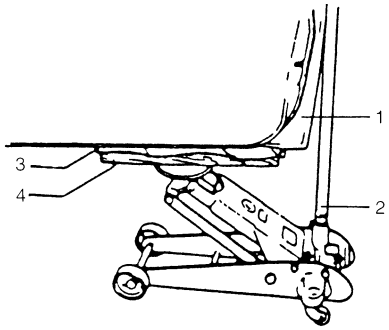

I2RH019A0003-01

5) Remove door assembly (1) by loosening hinge mounting bolts (2).

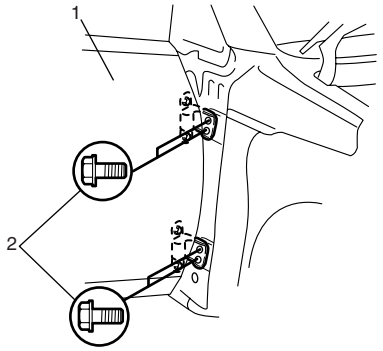

I4RS0A9A0006-01

Installation

Reverse removal procedure to install door assembly noting the following instructions.

- When replacing door, coat replacement door inside with wax for proper anti-corrosion treatment. Refer to “Sealant Application Areas in Section 9L”.
- Tighten front door hinge bolts, nuts and door open stopper bolt to specified torque referring to “Front Door Assembly Components”.
- Apply sealant to contact face “A” of hinge (1) and apply grease to rotating part “B” of hinge (1). Specified sealant and grease.

  “A”: Sealant 99000–31110 (SUZUKI Bond No.1215)
  “B”: Grease 99000–25011 (SUZUKI Super Grease A)

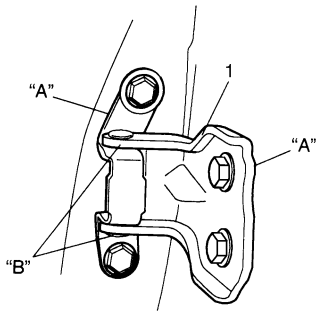

I6RW0B9A0003-01

- When door open stopper (1) is installed, be careful make sure punch mark (2) comes to the top.

  <u>Door open stopper installing direction</u>
  Left side door: L punch mark is upward
  Right side door: R punch mark is upward

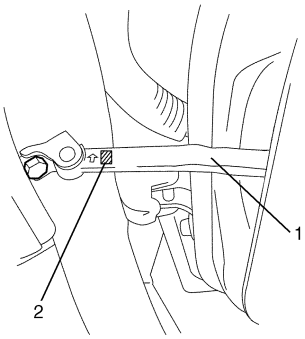

I6RW0B9A0004-01

- Adjust door latch striker position referring to “Front Door Lock Assembly Removal and Installation in Section 9F”.
- After installation, open and close the door to check looseness.

Rear Door Assembly Components

S7RW0A9A06007

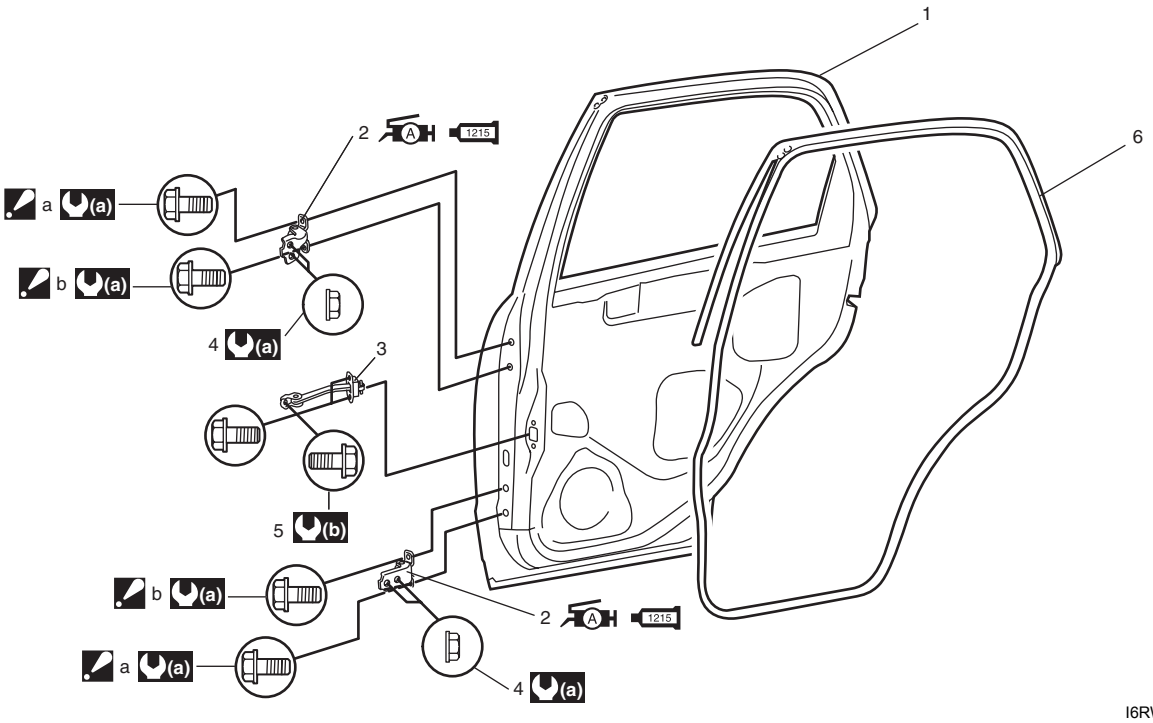

I6RW0B9A0005-01

1. Door panel	4. Rear door hinge nut	(a) : 23 N·m (2.3 kgf-m, 17.0 lb-ft)
A 1215 2. Door hinge : Apply lithium grease 99000-25011 to rotating part. : Apply sealant 99000-31110 to contact face.	5. Door open stopper bolt	(b) : 21 N·m (2.1 kgf-m, 15.5 lb-ft)
3. Door open stopper	6. Rear door opening weather-strip	a, b: Rear door hinge bolt Loosen and tightening order: a→b

Rear Door Assembly Removal and Installation

S7RW0A9A06008

Refer to “Front Door Assembly Removal and Installation” as removal and installation procedures are basically the same. However, note the following.

- Tighten rear door hinge bolts and nuts to specified torque referring to “Rear Door Assembly Components”.

Rear End Door Assembly Components (Hatchback Model)

S7RW0A9A06009

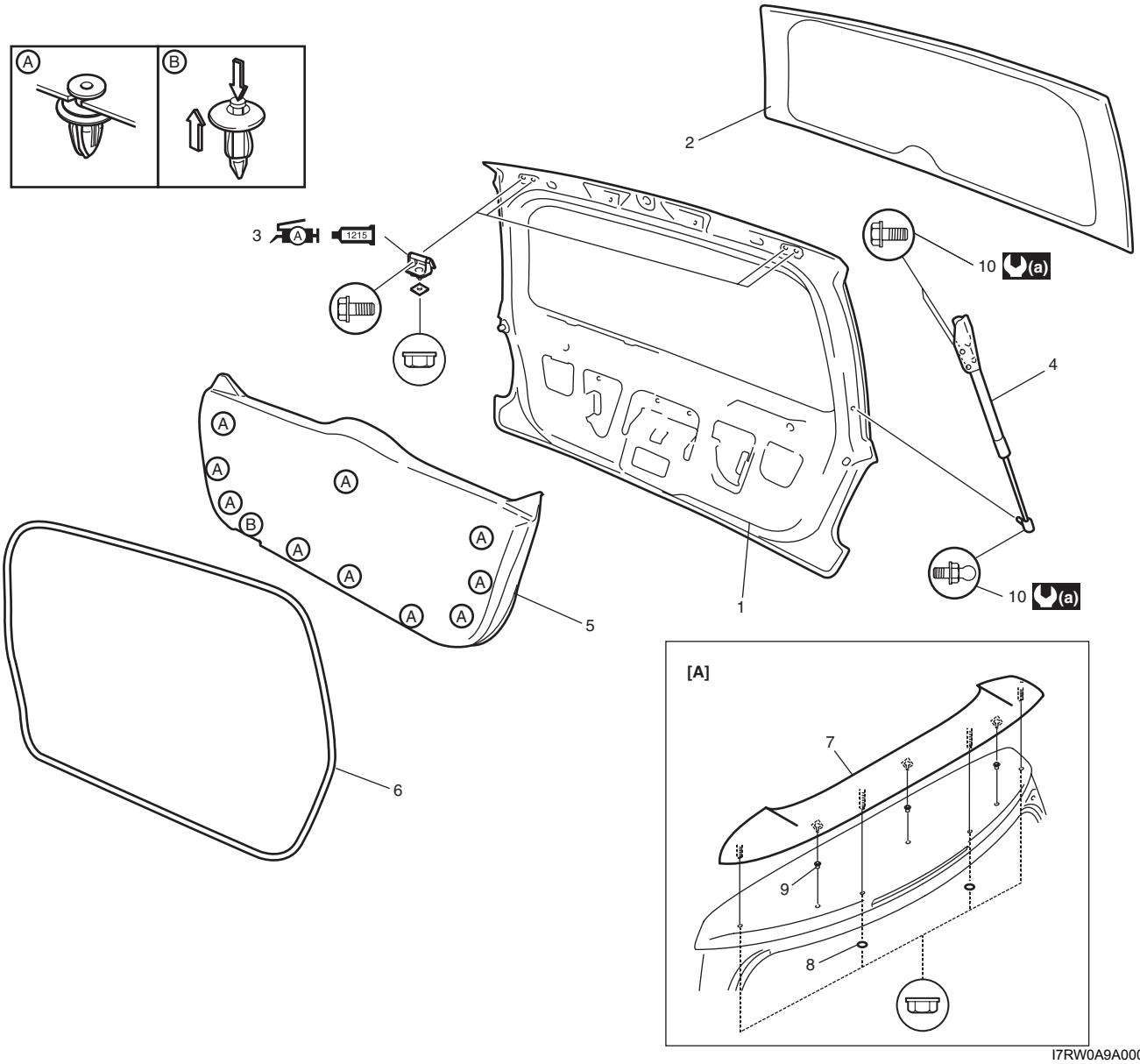

I7RW0A9A0003-01

[A]: Rear end door spoiler installation position	6. Rear end door opening wether-strip
1. Rear end door panel assembly	7. Rear end door spoiler (if equipped)
2. Rear end door window glass	8. Cap
A 1215 3. Rear end door hinge : Apply lithium grease 99000-25011 to door hinge moving section. : Apply sealant 99000-31110 to contact face.	9. Clip
4. Rear end door balancer	10. Rear end door balancer bolt
5. Rear end door trim	(a) : 23 N·m (2.3 kgf-m, 17.0 lb-ft)

Rear End Door Assembly Removal and Installation (Hatchback Model)

S7RW0A9A06010

⚠ WARNING

Be careful enough when you open and shut with door balancer has not adhered to rear end door.
Otherwise, Rear end door doses in weight and is injured.

Removal

1) Remove rear end door trim (1).
2) Remove related section of head lining and rear trim.
3) Disconnect rear end door harness couplers (2) and washer hose (3).
4) Remove rear end door balancers (4).
5) Remove door hinge nuts (5) and remove rear end door assembly (6).

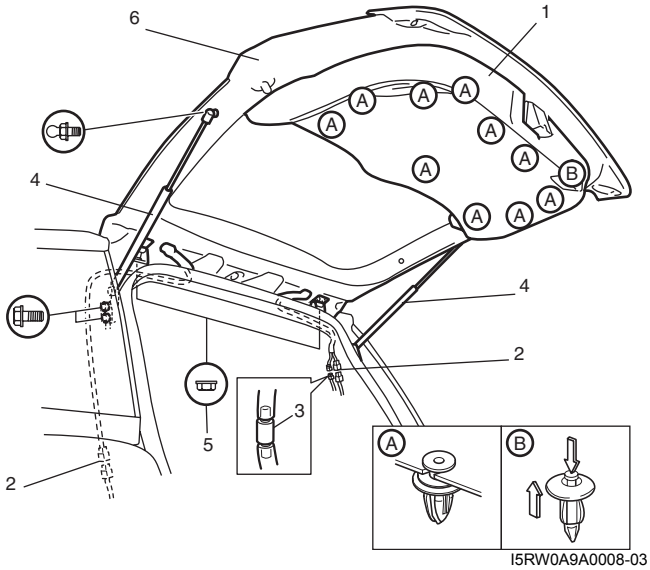

I5RW0A9A0008-03

⚠ WARNING

Handling of rear end door balancer (damper)

- **Handle balancer carefully. Do not scar or scratch exposed surface of its piston rod, and never allow any paint or oil to stick to its surface.**
- **Do not turn piston rod with balancer fully extended.**
- **Do not disassemble balancer (1) because its cylinder is filled with gas.**

Discarding of rear end door balancer (damper)

- **The gas itself in balancer is harmless but it may issue out of the hole together with chips generated by the drill (2). Therefore, be sure to wear goggle when drilling.**
- **Using a 2 to 3 mm (0.08 to 0.12 in.) drill (2), make a hole to remove gas inside as shown before discarding.**

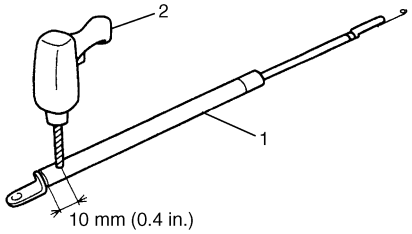

I2RH019A0010-01

Installation

Reverse removal procedure noting the following.

- Tighten rear end door balancer bolt to specified torque referring to “Rear End Door Assembly Components (Hatchback Model)”.
- Secure wiring harness (1).

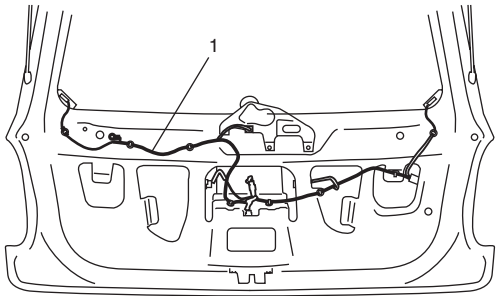

I5RW0A9A0010-01

- Adjust door latch striker position by referring to “Rear End Door Lock Assembly Removal and Installation (Hatchback Model) in Section 9F”.
- Adjust door cushion so that door contacts body when closed.
- Apply sealant to contact face “A” of door hinge (1) and apply grease to rotating part “B” of hinge (1). Specified sealant and grease.

  “A”: Sealant 99000–31110 (SUZUKI Bond No.1215)
  “B”: Grease 99000–25011 (SUZUKI Super Grease A)

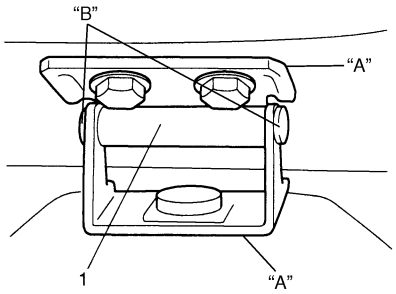

I2RH019A1012-01

Trunk Lid Components (Sedan Model)

S7RW0A9A06011

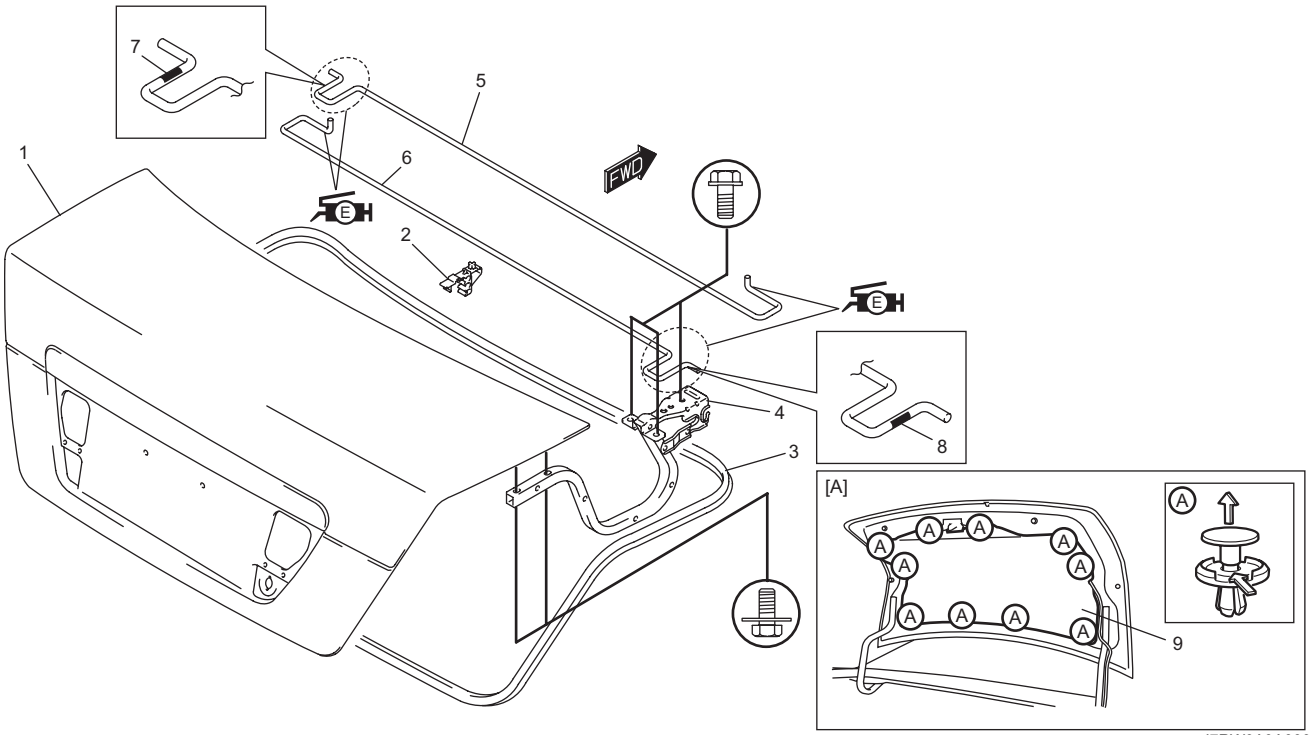

I7RW0A9A0002-02

[A]: Trunk lid trim installation position	4. Hinge	8. Blue mark
1. Trunk lid panel	5. Torsion bar (left side) : Apply grease 99000-25050 to rotating part.	9. Trunk lid trim (if equipped)
2. Torsion bar holder	6. Torsion bar (right side) : Apply grease 99000-25050 to rotating part.	
3. Weather-strip	7. Yellow mark	

Trunk Lid Removal and Installation (Sedan Model)

S7RW0A9A06012

Removal

⚠ WARNING

When removing torsion bar, be careful for its repulsion.

1) Remove trunk lid trim (if equipped).
2) Remove trunk lid opener wire and trunk room harness from trunk lid panel (1).
3) Remove trunk lid attaching bolts (2) and trunk lid.

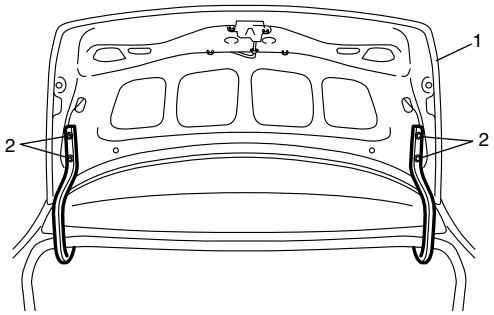

I2RH019A0014-01

NOTE

Handle removed trunk lid carefully. Dropping it can cause damage to itself and vehicle body.

4) Remove torsion bars (1).

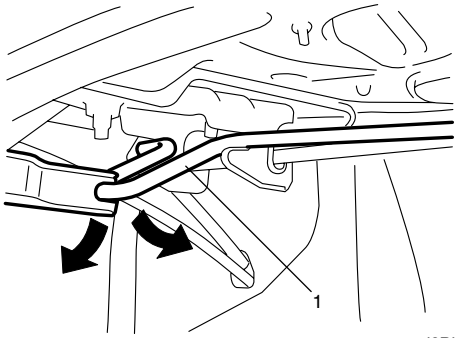

I2RH019A0015-01

5) Fold rear seat back forward.
6) Remove center pillar inner lower trims (1) and side sill scuffs (2).

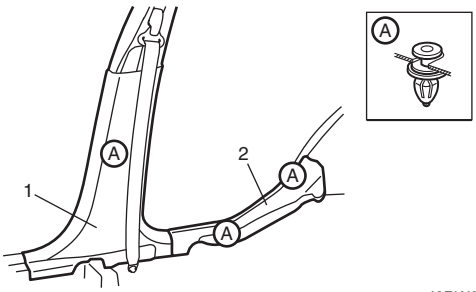

I6RW0B9A0008-02

7) Remove high mounted stop light (if equipped).

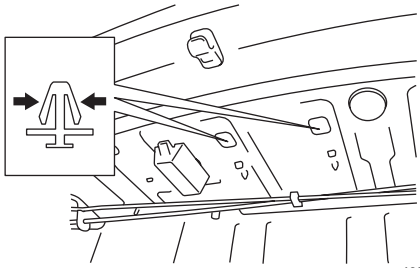

I8RW019A0003-01

8) Remove rear seat side backs (1).

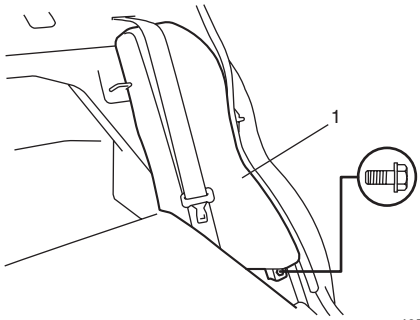

I6RW0B9A0009-02

9) Remove rear pillar inner trims (3), partition front trims (1) and partition trim (2).

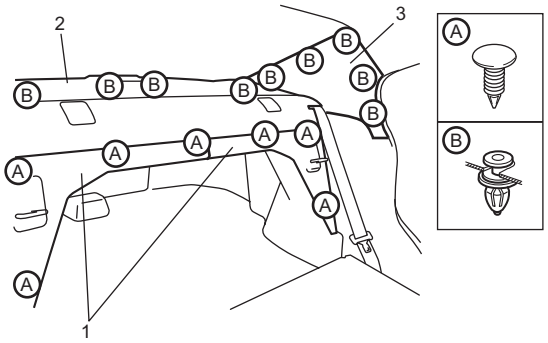

I8RW019A0002-02

10) Remove hinge attaching bolts (1) and take out trunk lid hinges.

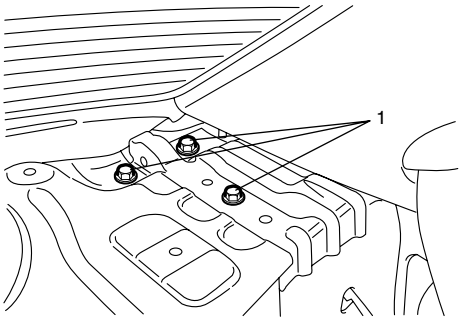

I2RH019A0018-01

Installation

Reverse removal procedure noting the following.

- Install torsion bars as following:
  a. Open trunk lid and hold it.
  b. Distinguish left side torsion bar (marking color: yellow) from right side torsion bar (marking color: blue) by marking color (1).
  c. Apply grease to rotating part “A” of torsion bar.

     “A”: Grease 99000–25050 (SUZUKI Super Grease E)

  d. Install edge (2) of torsion bar to upward and fit end (3) to groove of right side hinge bracket.
  e. Install edge (2) of torsion bar to upward and fit end (3) to groove of left side hinge bracket.

NOTE

Be sure to wipe off excess grease thoroughly as it may stain trunk interior and luggage in it.

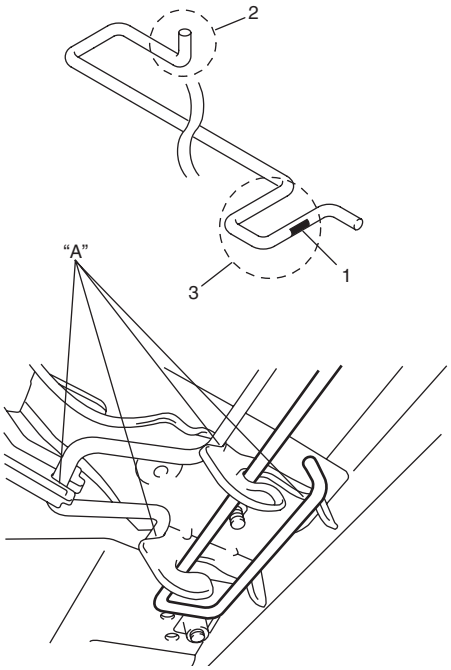

I6RW0B9A0011-02

- Fore-and-aft and right-and-left adjustment. Adjust trunk lid clearance by loosening trunk lid mounting bolts (2).
- Adjust trunk lid latch striker (1) so that striker shaft approximately aligns with the center of groove of trunk lid latch.

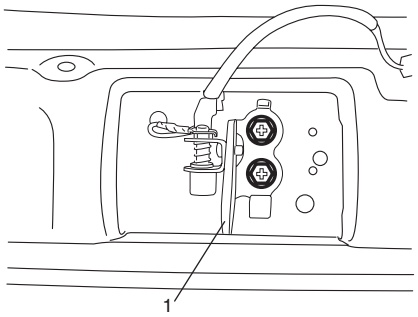

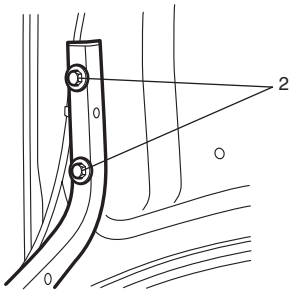

I6RW0B9A0012-01

- Tighten rear seat bolts referring to “Rear Seat Components in Section 9G”.

Specifications

Tightening Torque Specifications

S7RW0A9A07001

Fastening part	Tightening torque			Note
	N·m	kgf-m	lb-ft	
Hood latch bolt	10	1.0	7.5	☞

NOTE

The specified tightening torque is also described in the following.
“Front Door Assembly Components”
“Rear Door Assembly Components”
“Rear End Door Assembly Components (Hatchback Model)”

Reference:
For the tightening torque of fastener not specified in this section, refer to “Fasteners Information in Section 0A”.

Special Tools and Equipment

Recommended Service Material

S7RW0A9A08001

Material	SUZUKI recommended product or Specification		Note
Grease	SUZUKI Super Grease A	P/No.: 99000–25011	☞ / ☞
	SUZUKI Super Grease E	P/No.: 99000–25050	☞
Sealant	SUZUKI Bond No.1215	P/No.: 99000–31110	☞ / ☞ / ☞

NOTE

Required service material is also described in the following.
“Front Door Assembly Components”
“Rear Door Assembly Components”
“Rear End Door Assembly Components (Hatchback Model)”
“Trunk Lid Components (Sedan Model)”

Body Structure

Repair Instructions

Front Bumper and Rear Bumper Components

S7RW0A9B06001

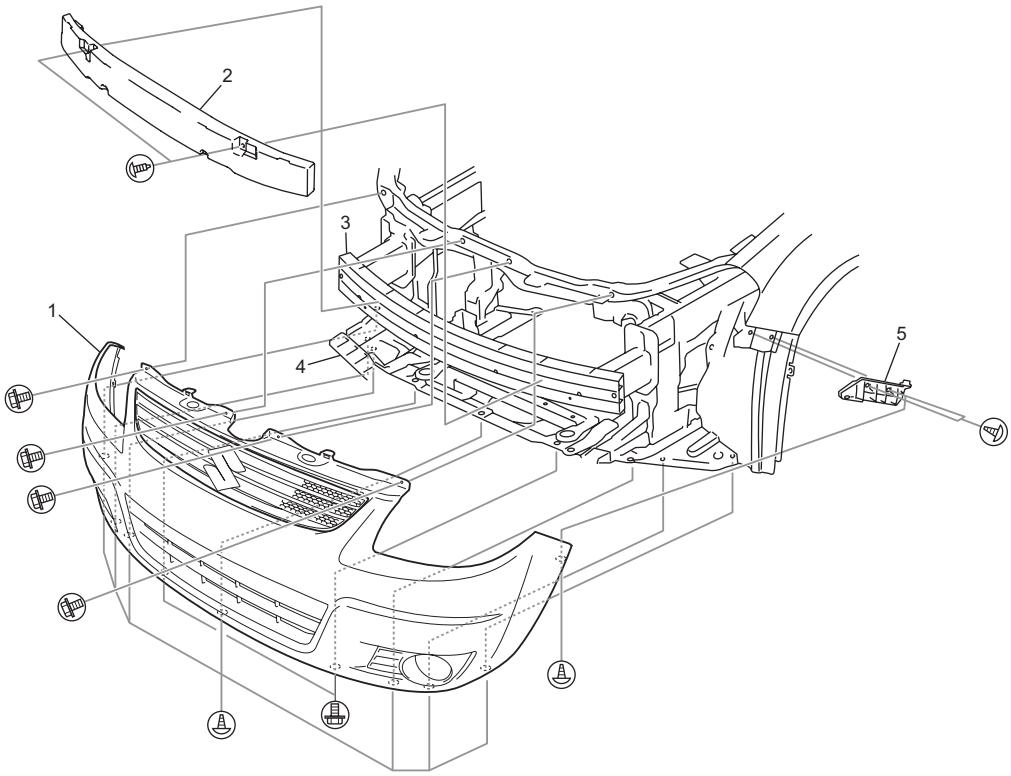

[A]

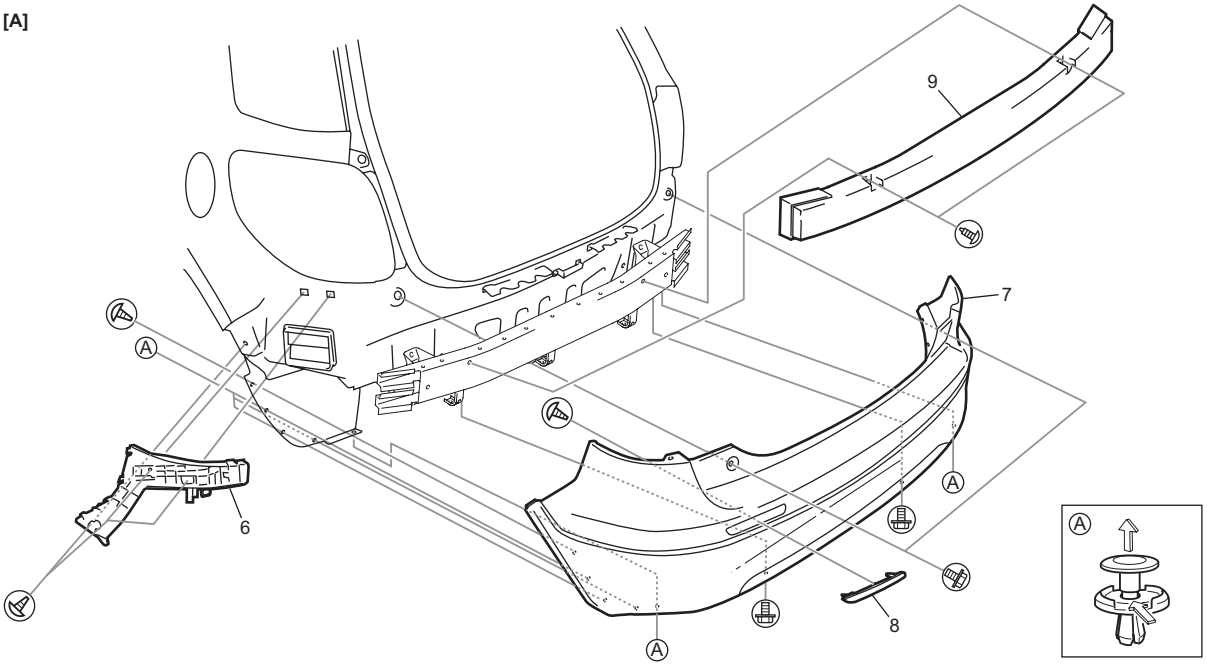

I8RW019B0001-01

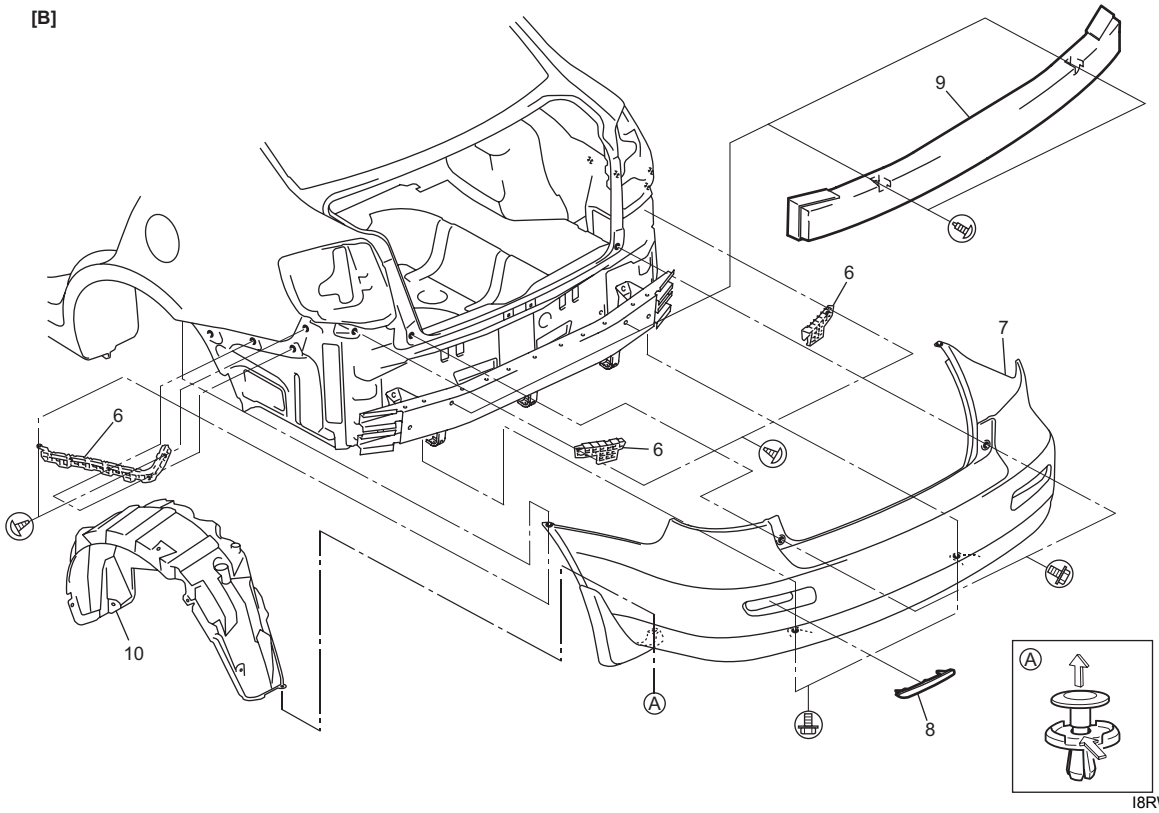

I8RW019B0002-02

[A]: Hatchback model	3. Front bumper upper member	7. Rear bumper
[B]: Sedan model	4. Front bumper lower member	8. Reflector
1. Front bumper	5. Front bumper holder	9. Rear bumper absorber (if equipped)
2. Front bumper absorber (if equipped)	6. Rear bumper holder	10. Fender lining

Radiator Grille Removal and Installation

S7RW0A9B06003

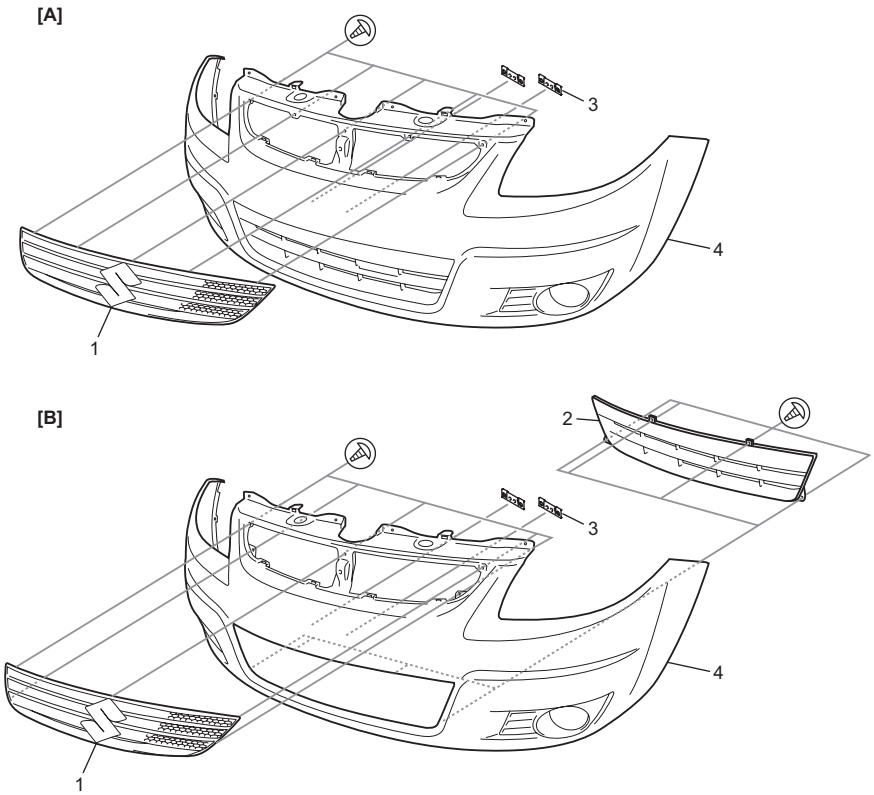

I8RW019B0003-01

[A]: Hatchback model	1. Radiator upper grille	3. Retainer
[B]: Sedan model	2. Radiator lower grille	4. Front bumper

Front Bumper Extension Removal and Installation (if equipped)

S7RW0A9B06004

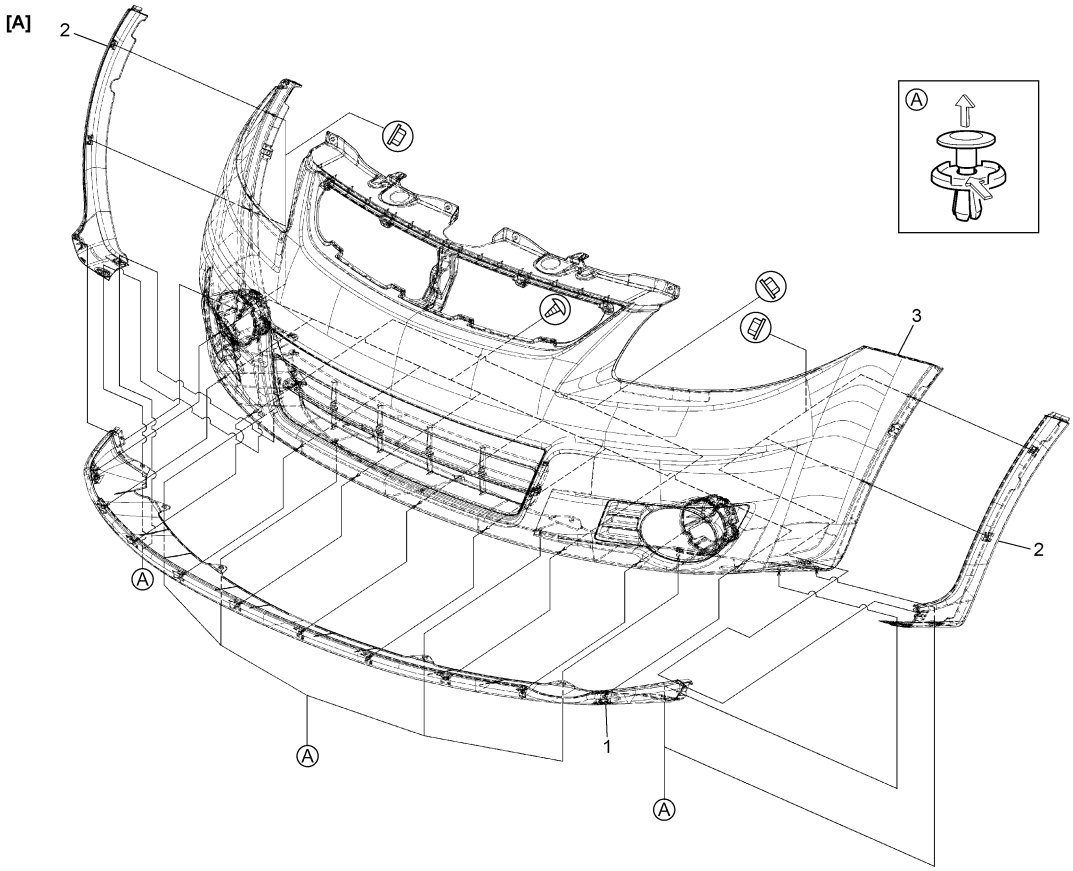

I8RW019B0004-01

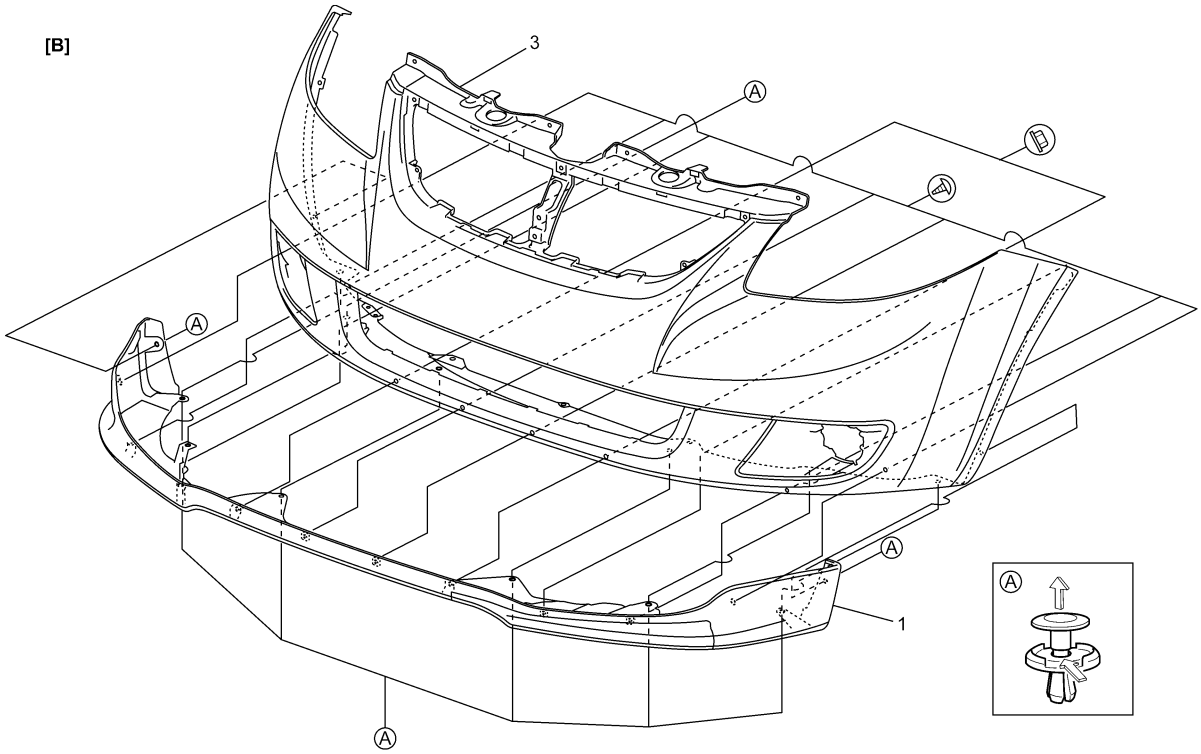

I8RW019B0005-02

[A]: Hatchback model	1. Front bumper center extension	3. Front bumper
[B]: Sedan model	2. Front bumper side extension	

Rear Bumper Extension Removal and Installation (if equipped)

S7RW0A9B06005

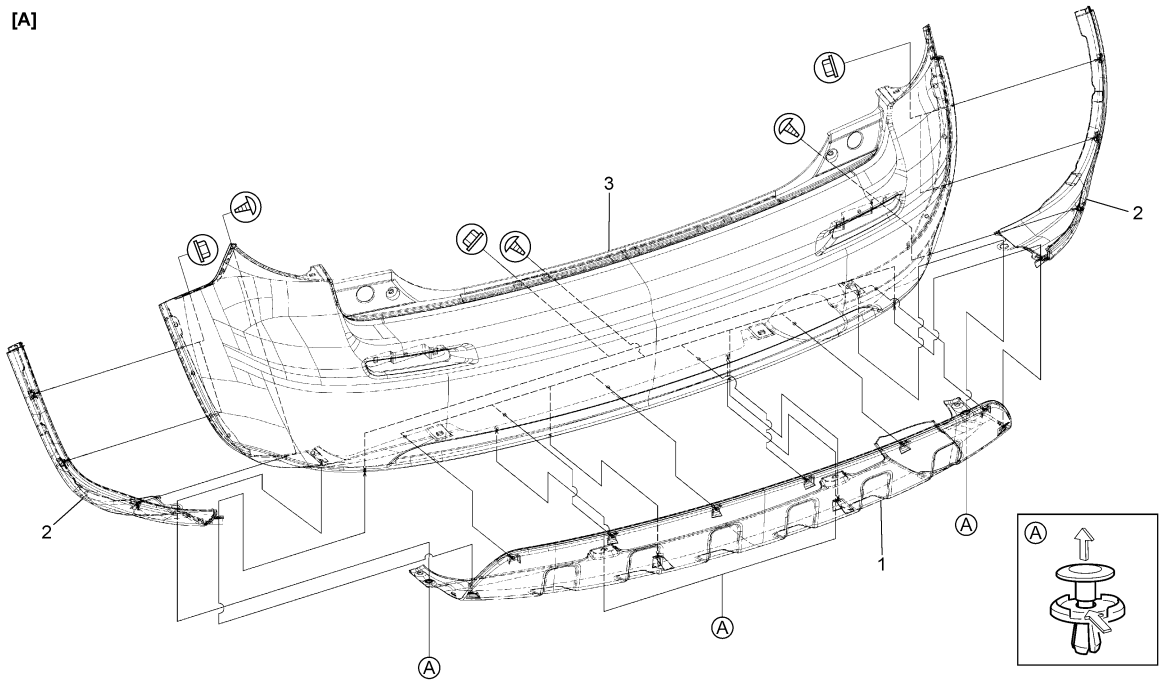

I8RW019B0006-01

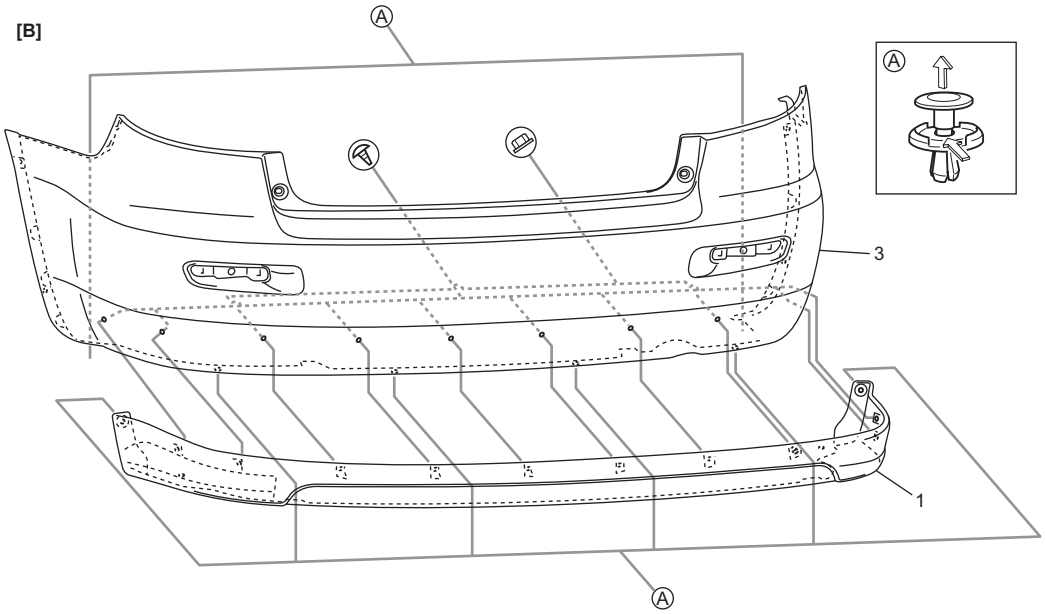

I8RW019B0007-02

[A]: Hatchback model	1. Rear bumper center extension	3. Rear bumper
[B]: Sedan model	2. Rear bumper side extension	

Cowl Top and Front Lower Crossmember Components

S7RW0A9B06002

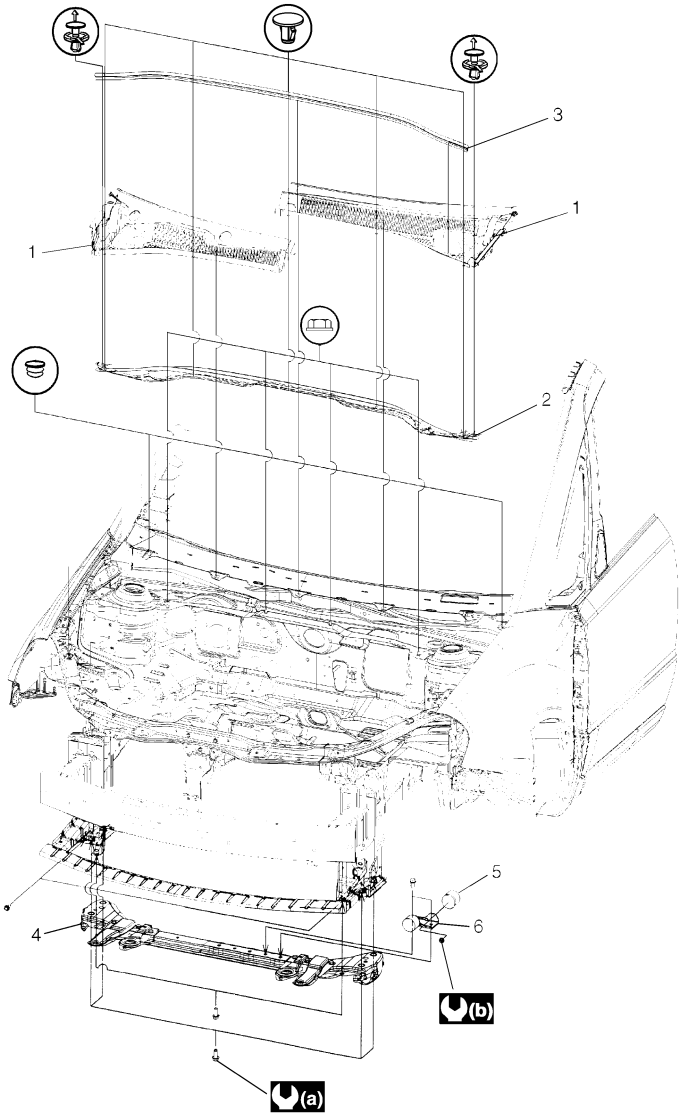

I7RW0A9B0001-02

1. Cowl top garnish	3. Hood rear seal	5. Damper	(a) : 55 N·m (5.5 kgf-m, 40.0 lb-ft)
2. Cowl top panel	4. Front lower crossmember	6. Damper bracket	(b) : 25 N·m (2.5 kgf-m, 18.5 lb-ft)

Specifications

Body Dimensions

S7RW0A9B07001

Engine Room

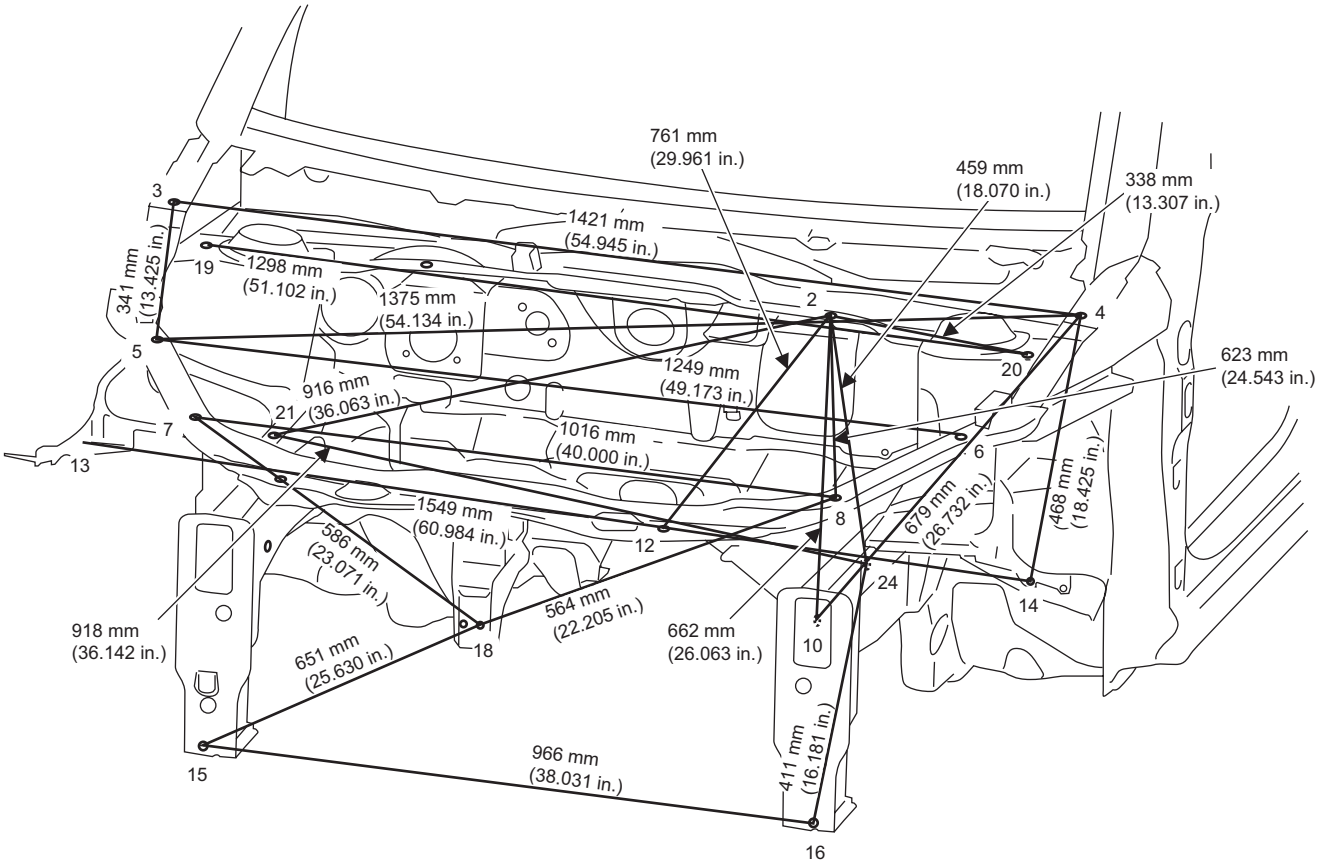

I7RW0A9B0003-02

Point	position		
2	Jig hole	L	ϕ8
3	Cowl top side cover installation hole	R	10×15
4	↑	L	↑
5	Eiming hole	R	ϕ12
6	↑	L	↑
7	Headlight installation hole	R	Weld nut M6
8	↑	L	↑
10	Cover installation hole	L	ϕ12
12	Hood cushion installation hole	L	ϕ10.4
13	Front fender installation front hole	R	Weld nut M6
14	↑	L	↑
15	Front bumper lower member installation lower hole	R	ϕ10
16	↑	L	↑
18	Jig hole	L	ϕ7
19	Cowl garnish installation hole	R	ϕ8
20	↑	L	↑
21	Right side engine mounting installation upper front hole	R	ϕ12
24	Left side engine mounting installation upper front hole	L	ϕ11.5

Rear End Door (Hatchback Model)

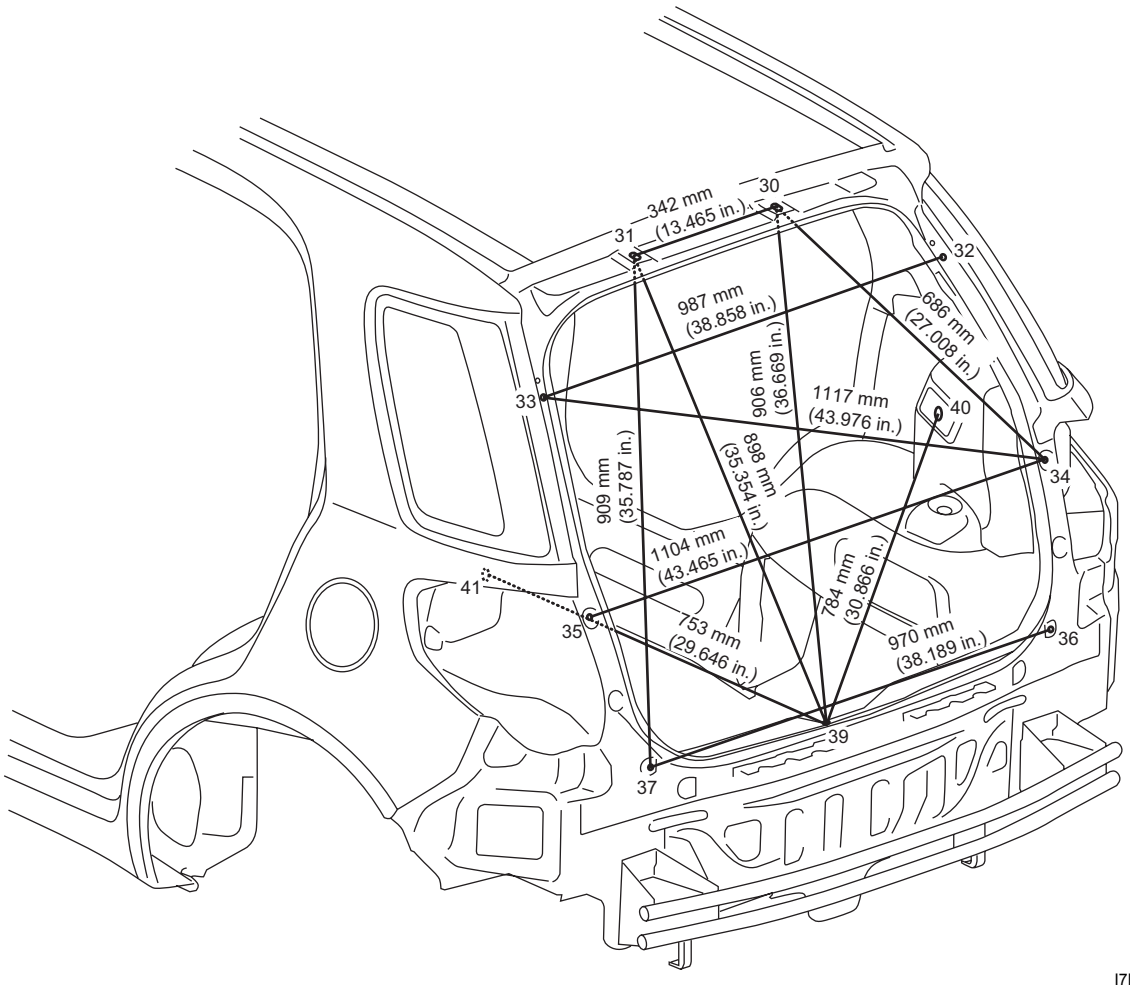

I7RW0A9B0017-03

Point	position		
30	Wire harness hole	R	17×22
31	↑	L	↑
32	Rear end door balancer lower hole	R	Weld nut M8
33	↑	L	↑
34	Combination lamp installation upper hole	R	Weld nut M6
35	↑	L	↑
36	Rear bumper installation hole	R	↑
37	↑	L	↑
39	Rear end door striker installation left sideb hole	L	Retainer M8
40	Rear seat back striker installation rear hole	R	Weld nut M8
41	↑	L	↑

Trunk Room (Sedan Model)

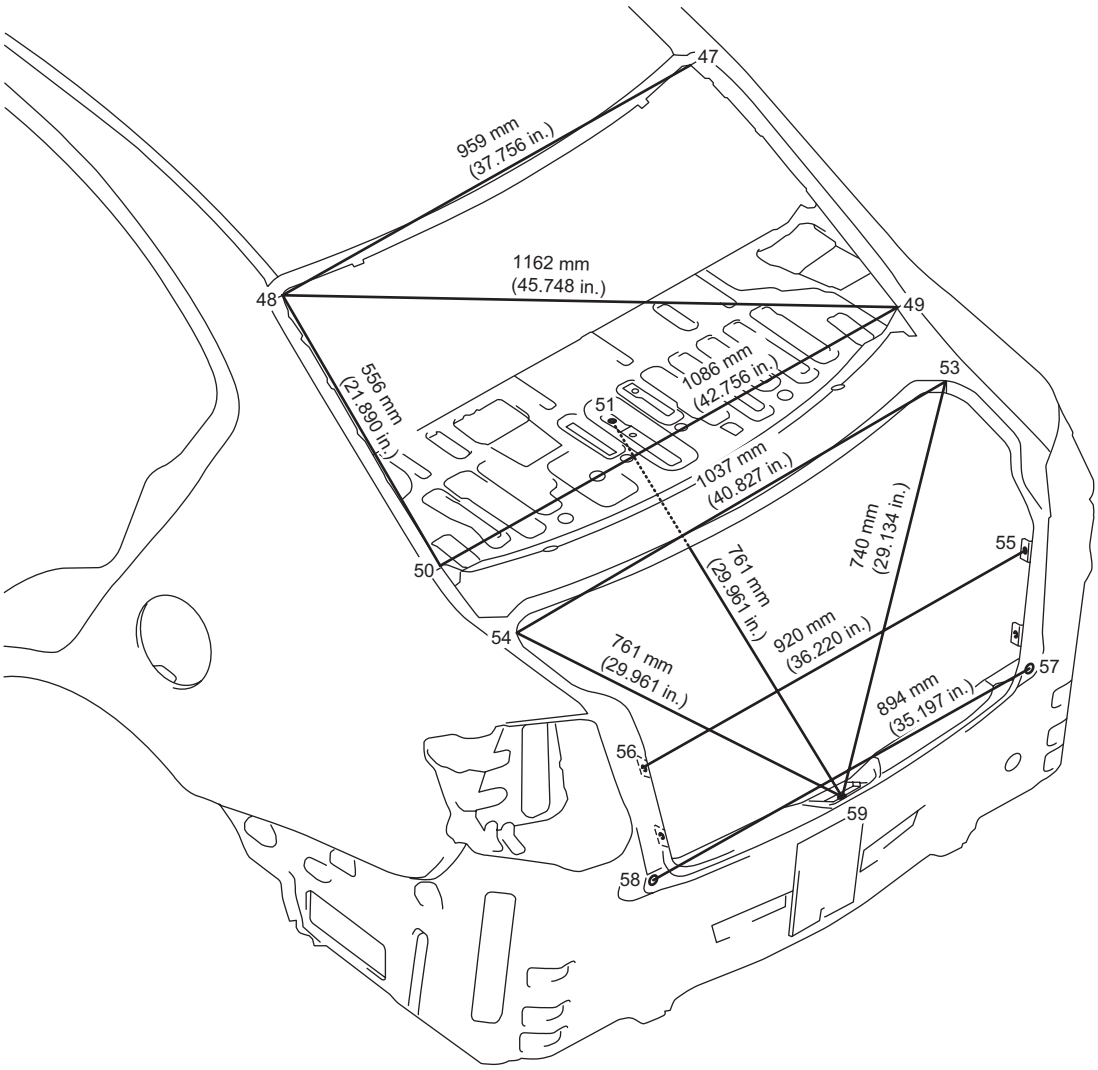

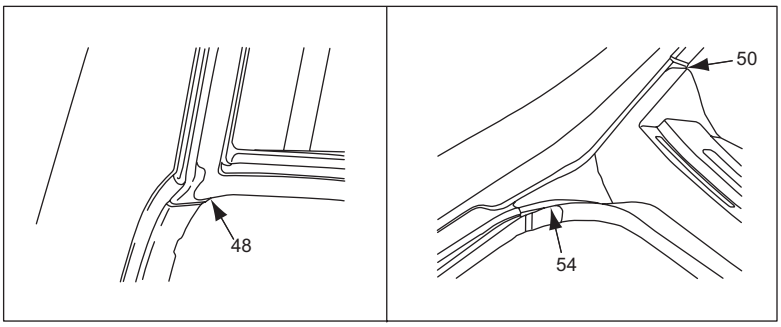

I7RW0A9B0004-02

Point	position		
47	Joint of panel(roof panel & side body outer panel)	R	
48	↑	L	
49	Joint of panel(side body outer panel & partition panel)	R	
50	↑	L	
51	Torsion bar holder installation hole		□7.9
53	joint of panel(side body outer panel & partition panel)	R	
54	↑	L	
55	Trunk side trim installation hole	R	ϕ7
56	↑	L	↑
57	Rear bumper installation hole	R	Weld nut M6
58	↑	L	↑
59	Trunk lid striker installation rear hole	R	↑

Side Body (Hatchback Model)

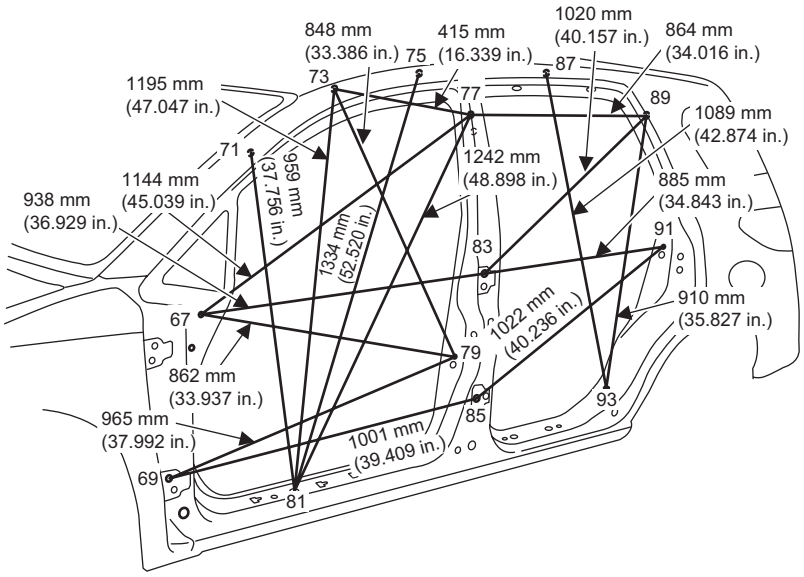

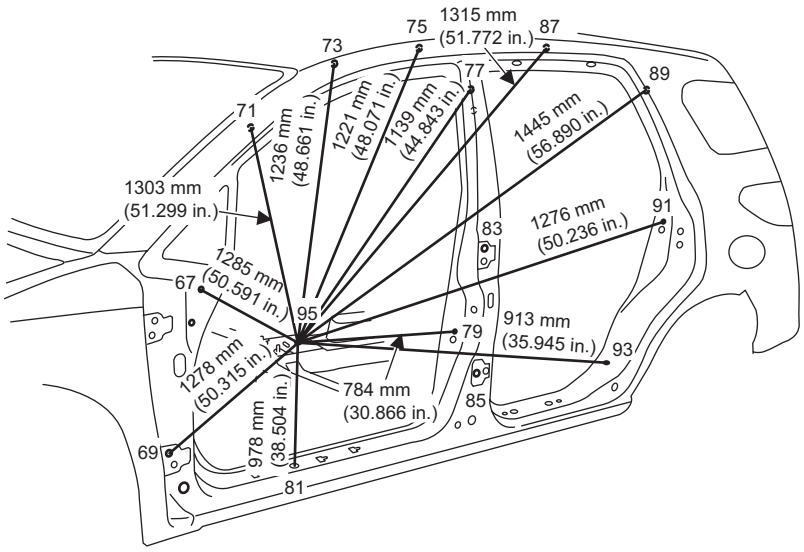

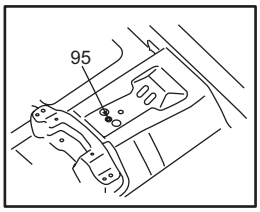

I7RW0A9B0006-01

Point	position		
67	Instrumental panel upper mounting hole	L	ϕ12
69	Front door lower hinge installation upper hole	L	↑
71	Front pillar rear trim installation hole	L	Weld nut M6
73	Curtain–air bag module installation hole	L	↑
75	↑	L	↑
77	Front shoulder adjuster installation upper hole	L	Weld nut M10
79	Front door switch mounting screw hole	L	
81	Bleeding hole	L	ϕ15
83	Rear door upper hinge installation upper hole	L	ϕ14
85	Rear door lower hinge installation front hole	L	↑
87	Curtain–air bag module installation hole	L	Weld nut M6
89	Rear seat belt upper anchor installation hole	L	Weld nut 7/16–20UNF
91	Rear door switch mounting screw hole	L	
93	Side sill scuff installation rear hole	L	ϕ7
95	Parking brake wire bracket front hole		ϕ11

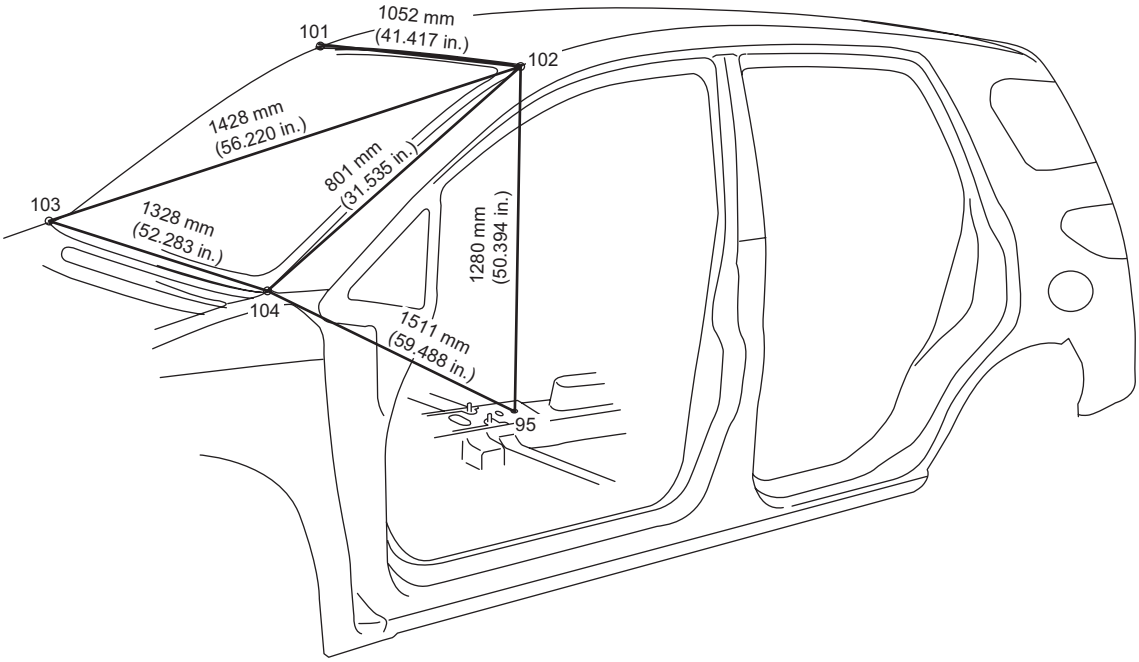

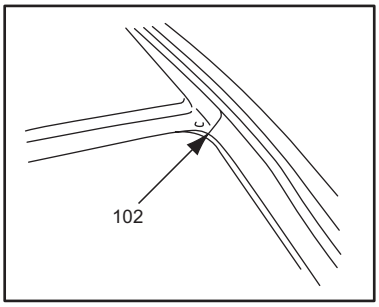

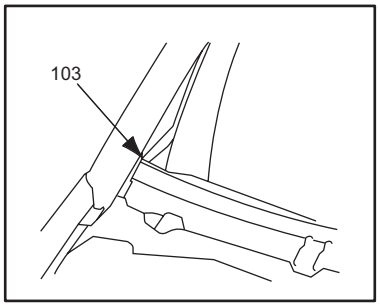

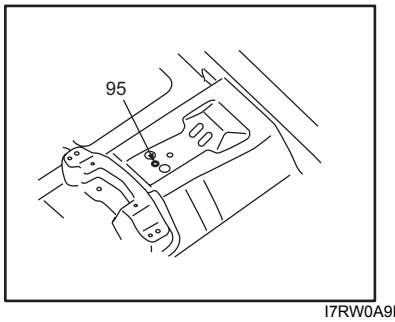

I7RW0A9B0007-02

Point	position		
95	Parking brake wire bracket front hole		ϕ11
101	Front end of windshield upper installation section	R	
102	↑	L	
103	Front end of windshield lower installation section	R	
104	↑	L	

Side Body (Sedan Model)

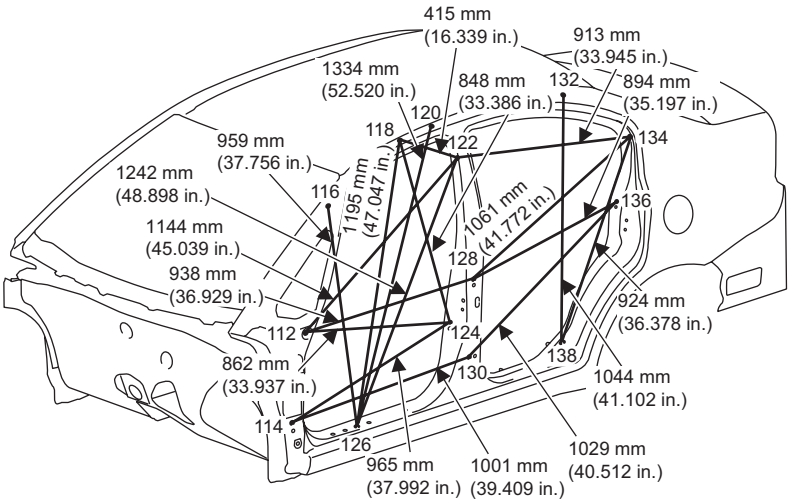

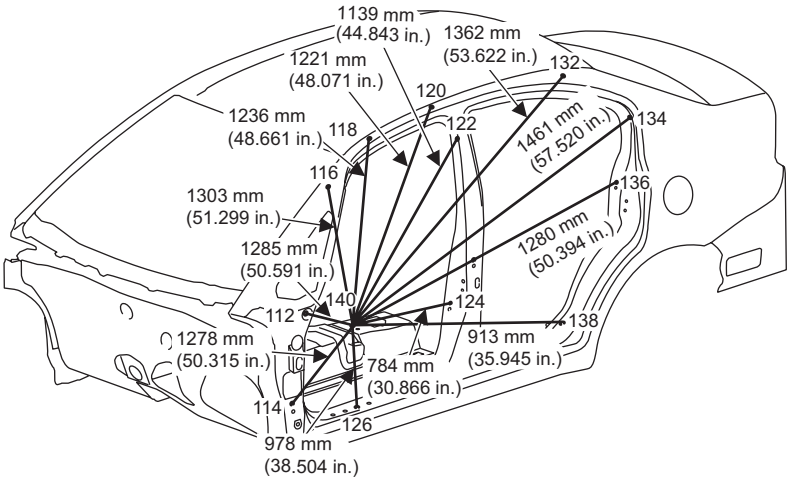

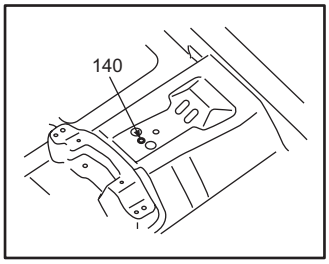

I7RW0A9B0008-02

Point	position		
112	Instrumental panel upper mounting hole	L	ϕ12
114	Front door lower hinge installation upper hole	L	↑
116	Front pillar rear trim installation hole	L	Weld nut M6
118	Curtain–air bag module installation hole	L	↑
120	↑	L	↑
122	Front shoulder adjuster installation upper hole	L	Weld nut M10
124	Front door switch mounting screw hole	L	
126	Bleeding hole	L	ϕ15
128	Rear door upper hinge installation upper hole	L	ϕ14
130	Rear door lower hinge installation front hole	L	↑
132	Curtain–air bag module installation hole	L	Weld nut M6
134	Rear pillar inner trim installation hole	L	ϕ8.5
136	Rear door switch mounting screw hole	L	
138	Side sill scuff installation rear hole	L	ϕ7
140	Parking brake wire bracket front hole	L	ϕ11

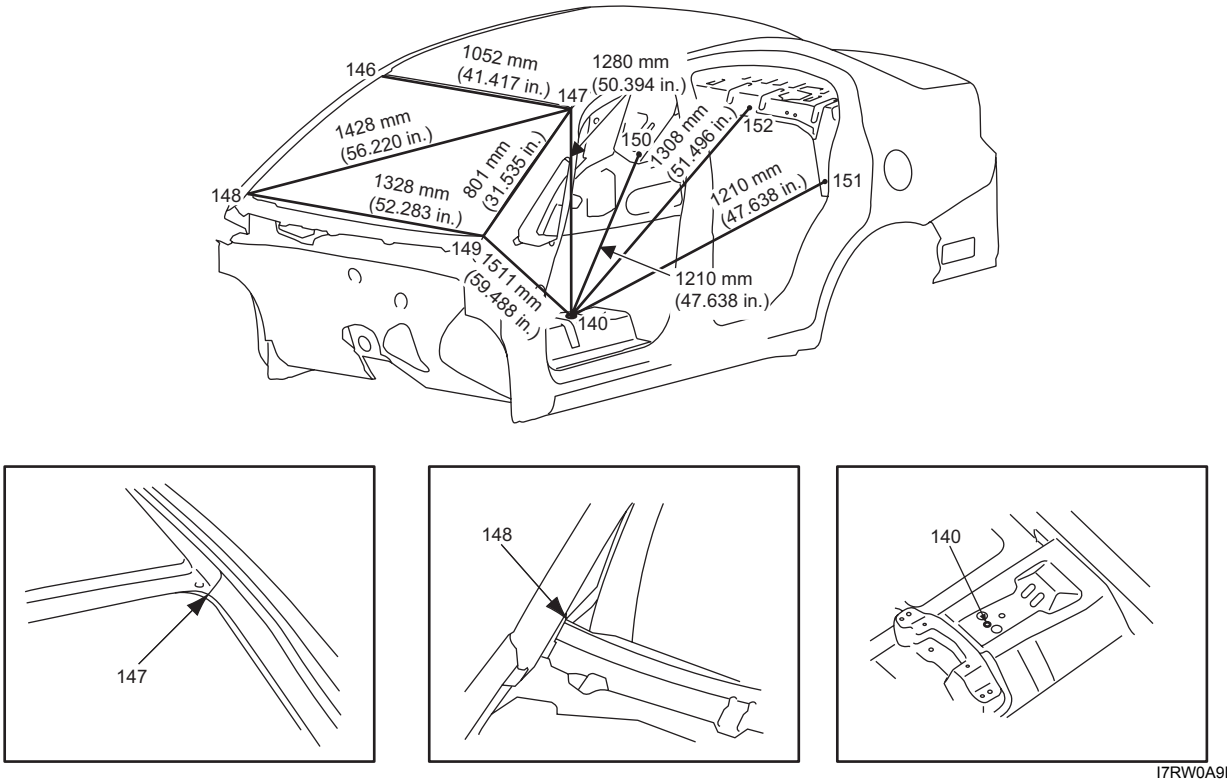

I7RW0A9B0009-02

Point	position		
140	Parking brake wire bracket front hole		ϕ11
146	Front end of windshield upper installation section	R	
147	↑	L	
148	Front end of windshield lower installation section	R	
149	↑	L	
150	Partition front trim installation hole	R	ϕ7
151	↑	L	↑
152	Partition trim installation hole		↑

Under Body (Hatchback Model)

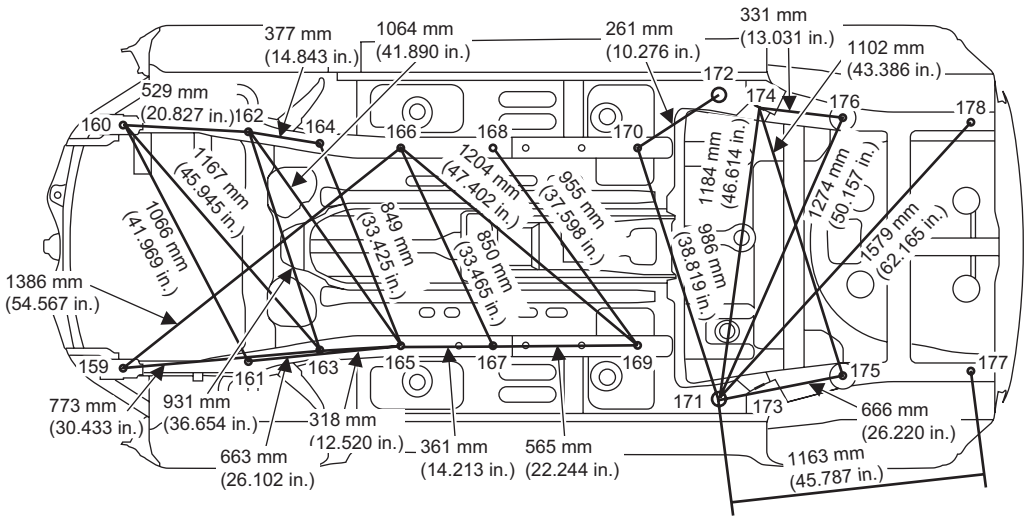

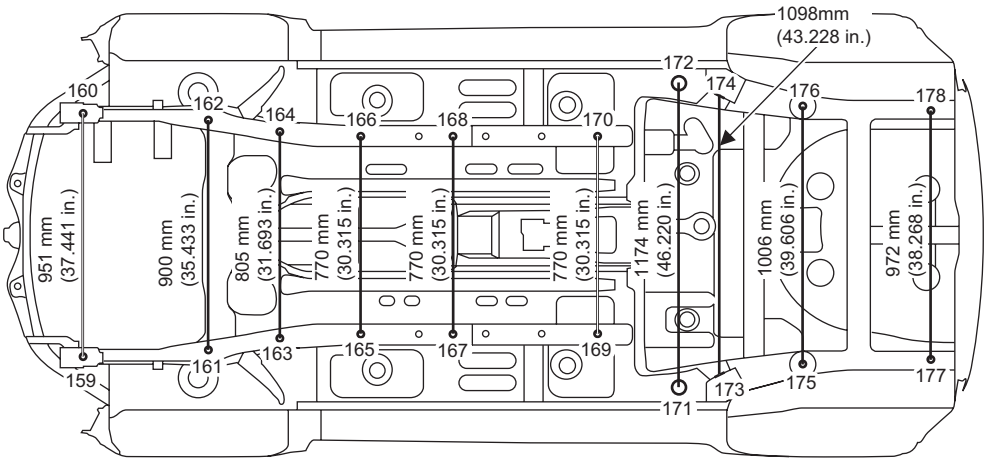

I7RW0A9B0010-01

Point	position		
159	Jig hole	R	ϕ20
160	↑	L	↑
161	Front suspension frame installation hole	R	
162	↑	L	
163	↑	R	
164	↑	L	
165	Jig hole	R	ϕ10
166	↑	L	↑
167	↑	R	↑
168	↑	L	↑
169	↑	R	ϕ15
170	↑	L	↑
171	↑	R	ϕ25
172	↑	L	↑
173	Rear axle housing installatiom inside hole	R	
174	↑	L	
175	Drain hole	R	ϕ10
176	↑	L	↑
177	Jig hole	R	ϕ12
178	↑	L	↑

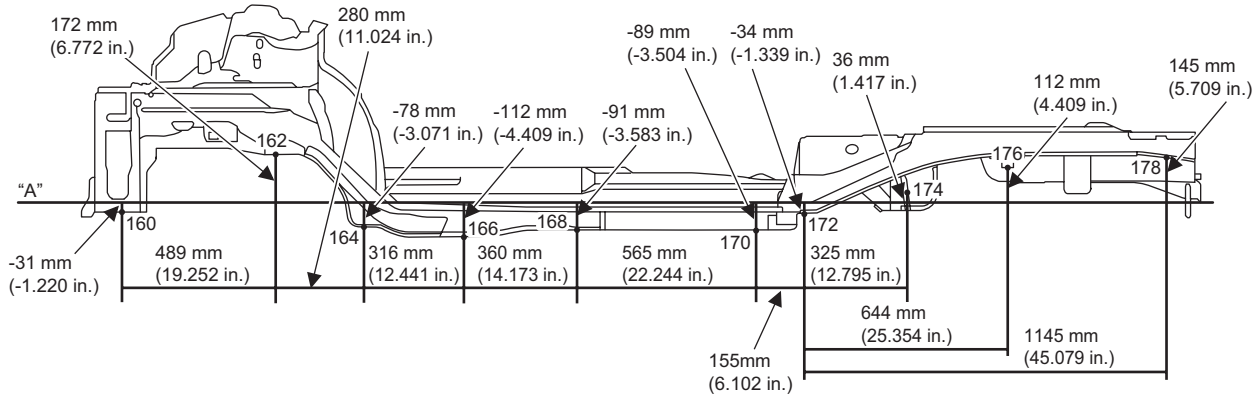

I7RW0A9B0011-01

Point	position		
160	Jig hole	L	ϕ20
162	Front suspension frame installation hole	L	
164	↑	L	
166	Jig hole	L	ϕ10
168	↑	L	↑
170	↑	L	ϕ15
172	↑	L	ϕ25
174	Rear axle housing installatiom inside hole	L	
176	Drain hole	L	ϕ10
178	Jig hole	L	ϕ12

Under Body (Sedan Model)

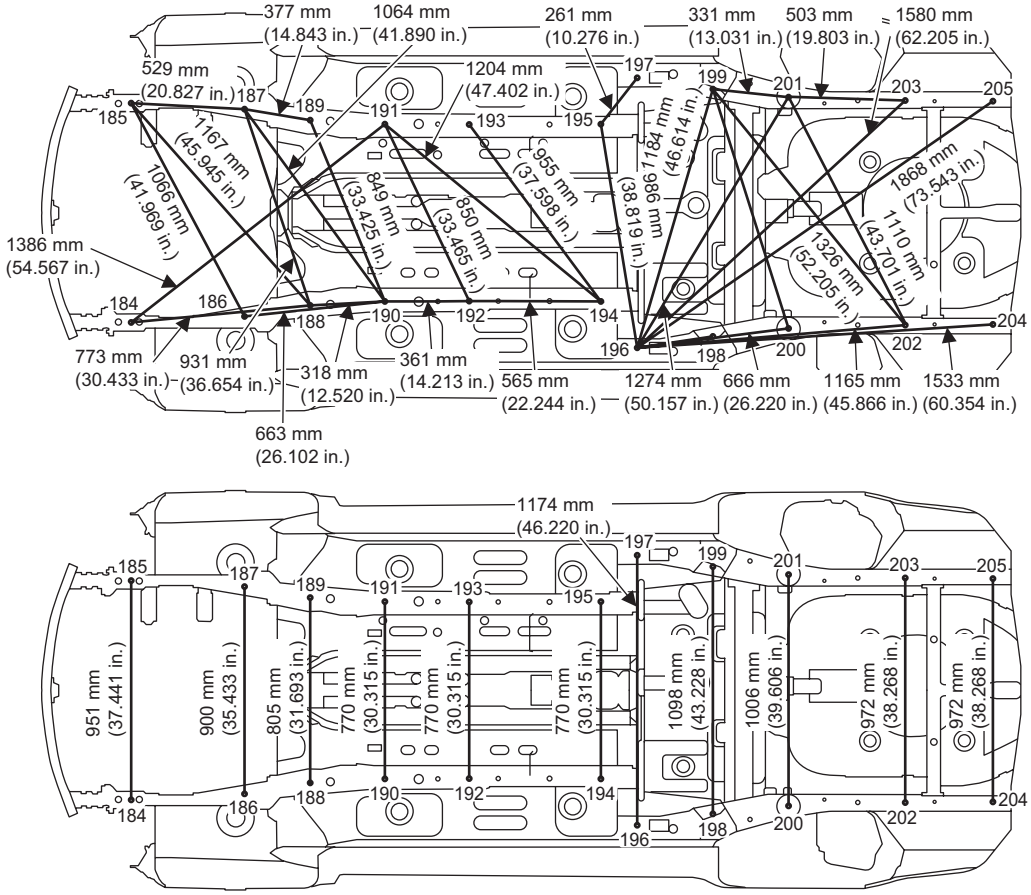

I7RW0A9B0012-02

Point	position		
184	Jig hole	R	ϕ20
185	↑	L	↑
186	Front suspension frame installation hole	R	
187	↑	L	
188	↑	R	
189	↑	L	
190	Jig hole	R	ϕ10
191	↑	L	↑
192	↑	R	↑
193	↑	L	↑
194	↑	R	ϕ15
195	↑	L	↑
196	↑	R	ϕ25
197	↑	L	↑
198	Rear axle housing installatiom inside hole	R	
199	↑	L	
200	Drain hole	R	ϕ10
201	↑	L	↑
202	Jig hole	R	ϕ12
203	↑	L	↑
204	↑	R	↑
205	↑	L	↑

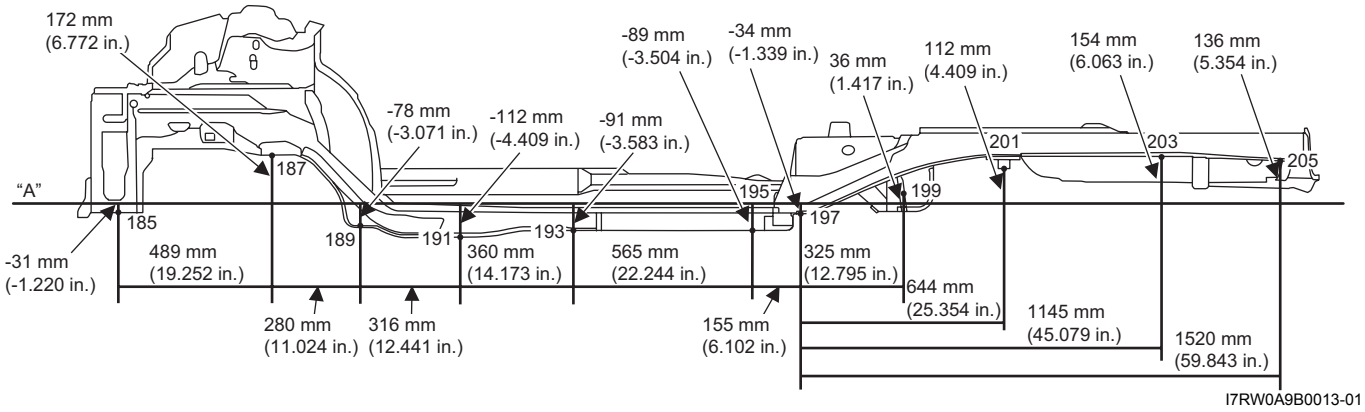

Point	position		
185	Jig hole	L	ϕ20
187	Front suspension frame installation hole	L	
189	↑	L	
191	Jig hole	L	ϕ10
193	↑	L	↑
195	↑	L	ϕ15
197	↑	L	ϕ25
199	Rear axle housing installatiom inside hole	L	
201	Drain hole	L	ϕ10
203	Jig hole	L	ϕ12
205	↑	L	↑

Front Suspension Frame

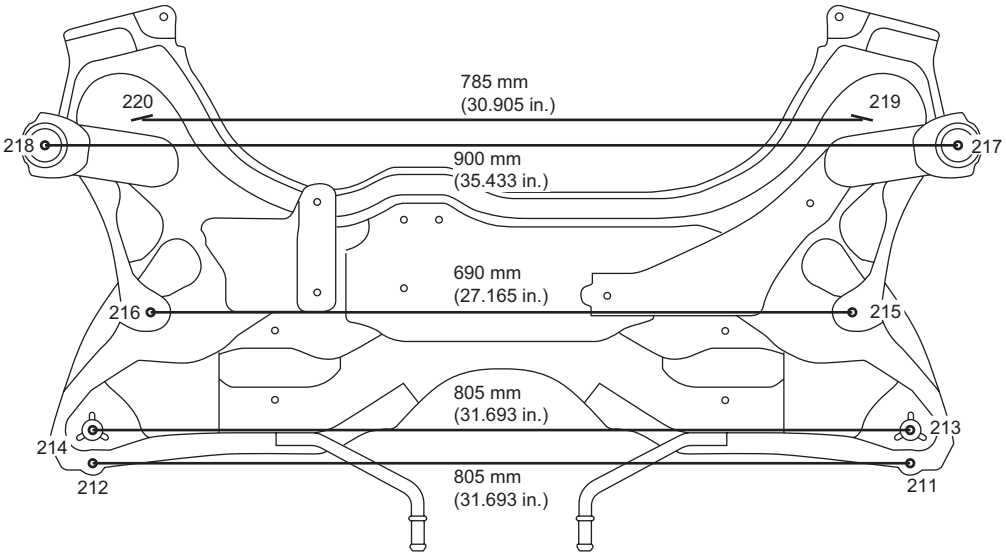

I7RW0A9B0014-01

Point	position		
211	root of stud	R	
212	↑	L	
213	front suspension frame installation hole	R	
214	↑	L	
215	front suspension control arm installation hole	R	
216	↑	L	
217	front suspension frame installation hole	R	
218	↑	L	
219	front suspension control arm installation hole	R	
220	↑	L	

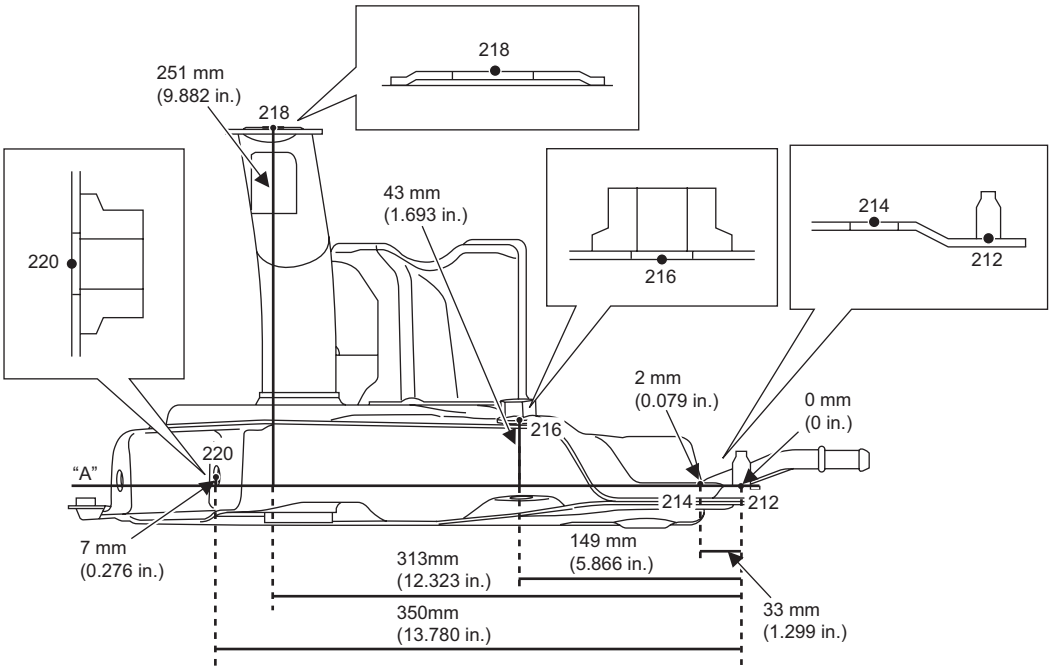

I7RW0A9B0015-01

Point	position		
212	root of stud	L	
214	front suspension frame installation hole	L	
216	front suspension control arm installation hole	L	
218	front suspension frame installation hole	L	
220	front suspension control arm installation hole	L	

Engine Front Mounting Member

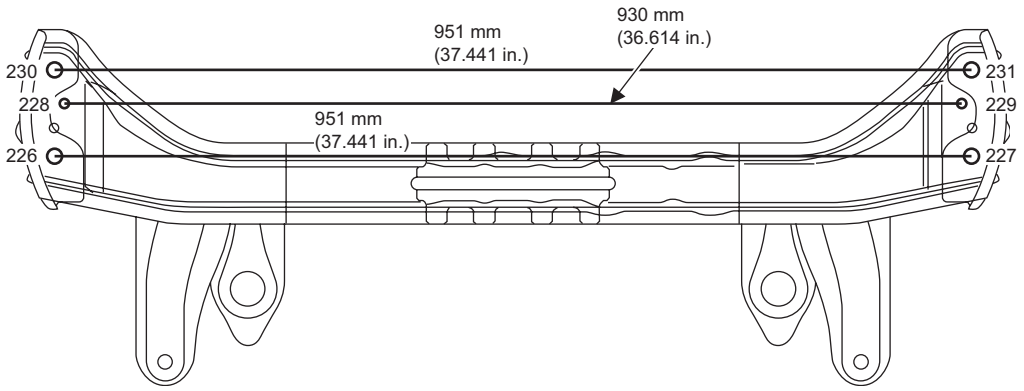

I7RW0A9B0016-02

Point	position		
226	Engine front mounting member installation hole	R	
227	↑	L	
228	Jig hole	R	ϕ15
229	↑	L	↑
230	Engine front mounting member installation hole	R	
231	↑	L	

Panel Clearance

S7RW0A9B07002

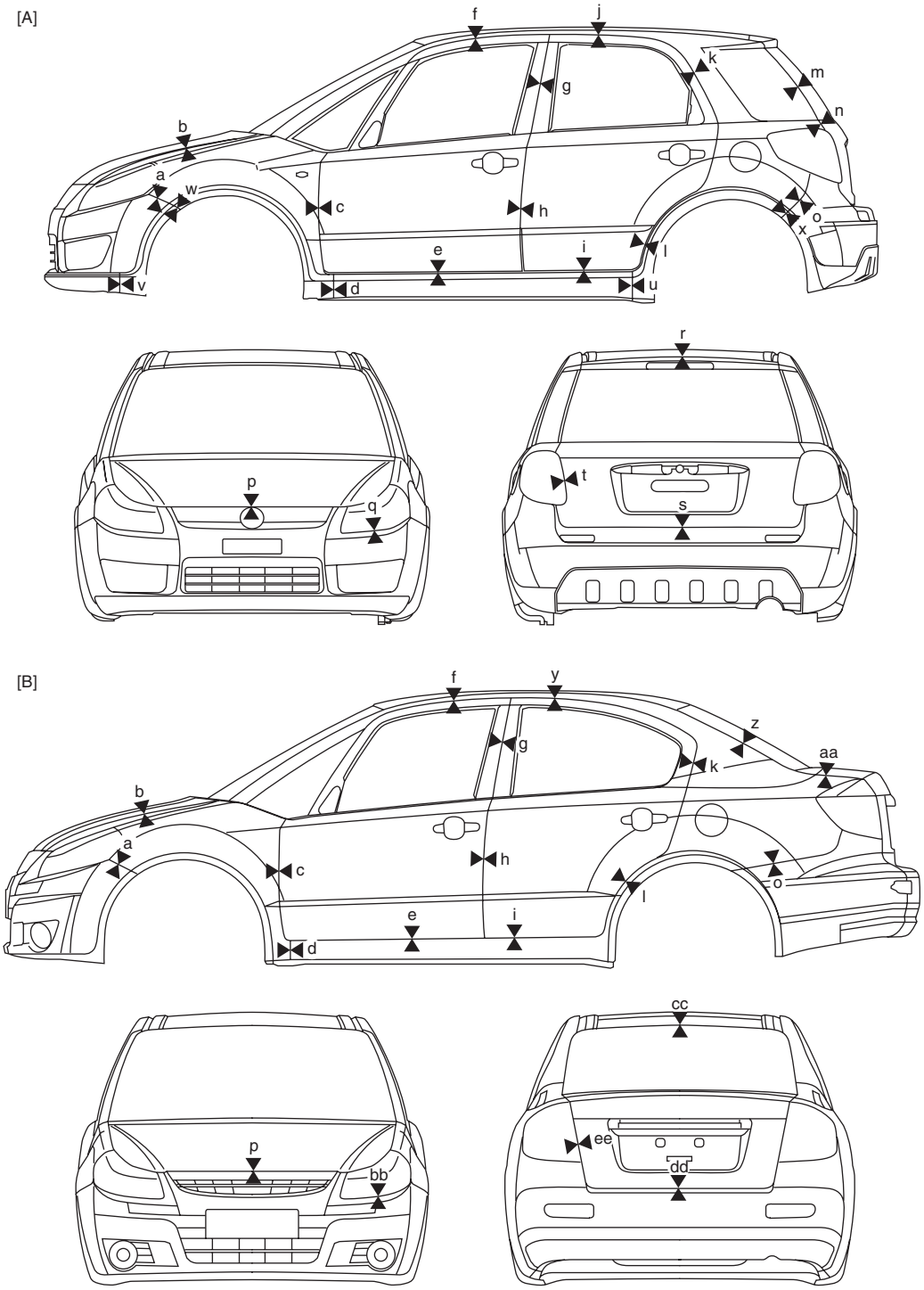

I6RW0B9B0009-01

Panel to panel distance

[A]: Hatchback model	o: 0 – 1.0 mm (0 – 0.039 in.)
[B]: Sedan model	p: 5.2 – 7.2 mm (0.205 – 0.283 in.) (Hatchback model) 6.2 – 8.2 mm (0.244 – 0.323 in.) (Sedan model)
a: 0 – 1.5 mm (0 – 0.059 in.)	q: 2.0 mm (0.079 in.)
b: 2.7 – 4.7 mm (0.106 – 0.185 in.)	r: 7.5 – 9.0 mm (0.295 – 0.354 in.)
c: 3.6 – 5.6 mm (0.142 – 0.220 in.)	s: 5.0 – 7.0 mm (0.197 – 0.276 in.)
d: 1.0 – 3.0 mm (0.039 – 0.118 in.) (Vehicle with splash guard)	t: 4.0 – 6.0 mm (0.157 – 0.236 in.)
: 2.0 – 3.0 mm (0.079 – 0.118 in.) (Vehicle without splash guard)	u: 1.0 – 3.0 mm (0.039 – 0.118 in.) (Vehicle with splash guard)
e: 4.8 – 6.8 mm (0.189 – 0.268 in.)	v: 1.0 – 3.0 mm (0.039 – 0.118 in.) (Vehicle with splash guard)
f: 4.0 – 6.0 mm (0.157 – 0.236 in.)	w: 1.0 – 3.0 mm (0.039 – 0.118 in.) (Vehicle with splash guard)
g: 3.6 – 5.6 mm (0.142 – 0.220 in.)	x: 1.0 – 3.0 mm (0.039 – 0.118 in.) (Vehicle with splash guard)
h: 3.6 – 5.6 mm (0.142 – 0.220 in.)	y: 4.1 – 6.1 mm (0.161 – 0.240 in.)
i: 4.8 – 6.8 mm (0.189 – 0.268 in.)	z: 2.8 – 4.8 mm (0.110 – 0.189 in.)
j: 4.0 – 6.0 mm (0.157 – 0.236 in.)	aa: 2.5 – 4.5 mm (0.098 – 0.177 in.)
k: 3.5 – 5.5 mm (0.138 – 0.217 in.)	bb: 1.0 – 3.0 mm (0.039 – 0.118 in.)
l: 3.5 – 5.5 mm (0.138 – 0.217 in.)	cc: 7.7 – 9.2 mm (0.303 – 0.362 in.)
m: 4.0 – 6.0 mm (0.157 – 0.236 in.)	dd: 6.3 – 8.3 mm (0.248 – 0.327 in.)
n: 4.1 – 6.1 mm (0.161 – 0.240 in.)	ee: 3.5 – 5.5 mm (0.138 – 0.217 in.)

Tightening Torque Specifications

S7RW0A9B07003

NOTE

The specified tightening torque is also described in the following.
“Cowl Top and Front Lower Crossmember Components”

Reference:
For the tightening torque of fastener not specified in this section, refer to “Fasteners Information in Section 0A”.

Paint / Coatings

General Description

Anti-Corrosion Treatment Construction

S7RW0A9C01001

⚠ WARNING

Standard shop practices, particularly eye protection, should be followed during the performance of the following operations to avoid personal injury.

As rust proof treatment, steel sheets are given corrosion resistance on the interior and/or exterior.
These corrosion resistance steel sheet materials are called one of two-side galvanized steel sheets.
It is for the sake of rust protection that these materials are selected and given a variety of treatments as described blow.

- Steel sheets are treated with cathodic electro primer which is excellent in corrosion resistance.
- Rust proof wax coatings are applied to door and side sill insides where moisture is liable to stay.
- Vinyl coating is applied to body underside and wheel housing inside.
- Sealer is applied to door hem, engine compartment steel sheet-to-steel sheet joint, and the like portions to prevent water penetration and resulting in rust occurrence.

In panel replacement or collision damage repair, leaving the relevant area untreated as it is in any operation which does disturb the rust proof treatment will cause corrosion to that area. Therefore, it is the essential function of any repair operation to correctly recoat the related surfaces of the relevant area.
All the metal panels are coated with metal conditioners and primer coating during vehicle production. Following the repair and/or replacement parts installation, every accessible bare metal surface should be cleaned and coated with rust proof primer. Perform this operation prior to the application of sealer and rust proof wax coating.
Sealer is applied to the specific joints of a vehicle during production. The sealer is intended to prevent dust from entering the vehicle and serves also as an anticorrosion barrier. The sealer is applied to the door and hood hem areas and between panels. Correct and reseal the originally sealed joints if damaged. Reseal the attaching joints of a new replacement panel and reseal the hem area of a replacement door or hood.
Use a quality sealer to seal the flanged joints, overlap joints and seams. The sealer must have flexible characteristics and paint ability after it's applied to repair areas.
For the sealer to fill open joints, use caulking material. Select a sealer in conformance with the place and purpose of a specific use. Observe the manufacturer's label-stand instructions when using the sealer.
In many cases, repaired places require color painting. When this is required, follow the ordinary techniques specified for the finish preparation, color painting and undercoating build-up.
Rust proof wax, a penetrative compound, is applied to the metal-to-metal surfaces (door and side sill insides) where it is difficult to use ordinary undercoating material for coating. Therefore, when selecting the rust proof wax, it may be the penetrative type.
During the undercoating (vinyl coating) application, care should be taken that sealer is not applied to the engine-related parts and shock absorber mounting or rotating parts. Following the under coating, make sure that body drain holes are kept open.
The sequence of the application steps of the anti-corrosion materials are as follows:

1) Clean and prepare the metal surface.
2) Apply primer.
3) Apply sealer (all joints sealed originally).
4) Apply color in areas where color is required such as hem flanges, exposed joints and under body components.
5) Apply anticorrosion compound (penetrative wax).
6) Apply undercoating (rust proof material).

Plastic Parts Finishing

S7RW0A9C01002

Painting

Rigid or hard ABS plastic needs no primer coating. General acrylic lacquers can be painted properly over hard ABS plastic in terms of adherence.

1) Use cleaning solvent for paint finish to wash each part.
2) Apply conventional acrylic color lacquer to part surface.
3) Follow lacquer directions for required drying time. (Proper drying temperature range is 60 – 70 °C (140 – 158 °F)).

Reference

Plastic parts employ not only ABS (Acrylonitrile Butadiene Styrene) plastic but also polypropylene, vinyl, or the like plastic. Burning test method to identify ABS plastic is described below.

1) Use a sharp blade to cut off a plastic sliver from the part at its hidden backside.
2) Hold sliver with pincers and set it on fire.
3) Carefully observe condition of the burning plastic.
4) ABS plastic must raise readily distinguishable back smoke while burning with its residue suspended in air temporarily.

5) Polypropylene must raise no readily distinguishable smoke while burning.

Component Location

Sealant Application Areas

S7RW0A9C03001

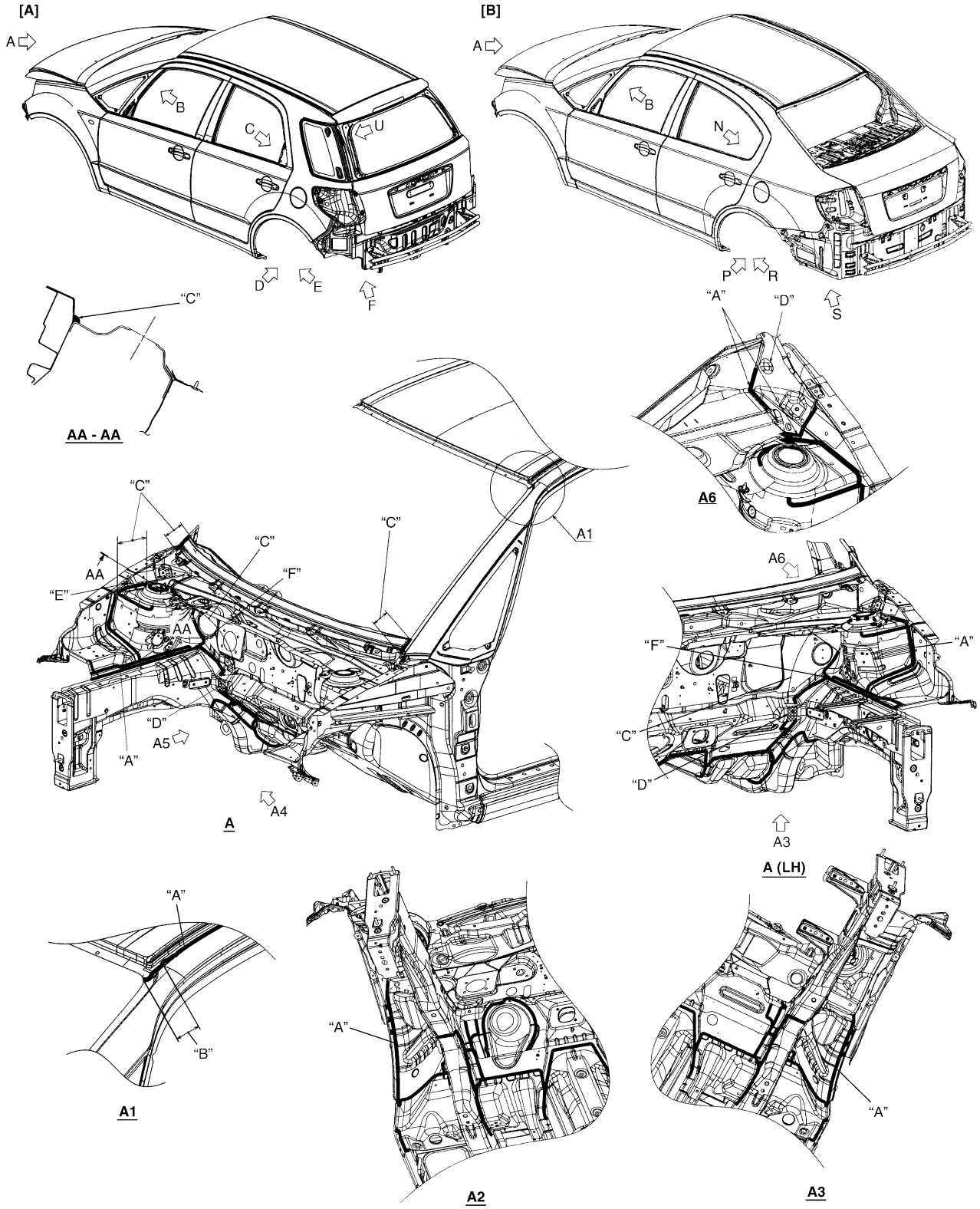

I8RW019C0001-01

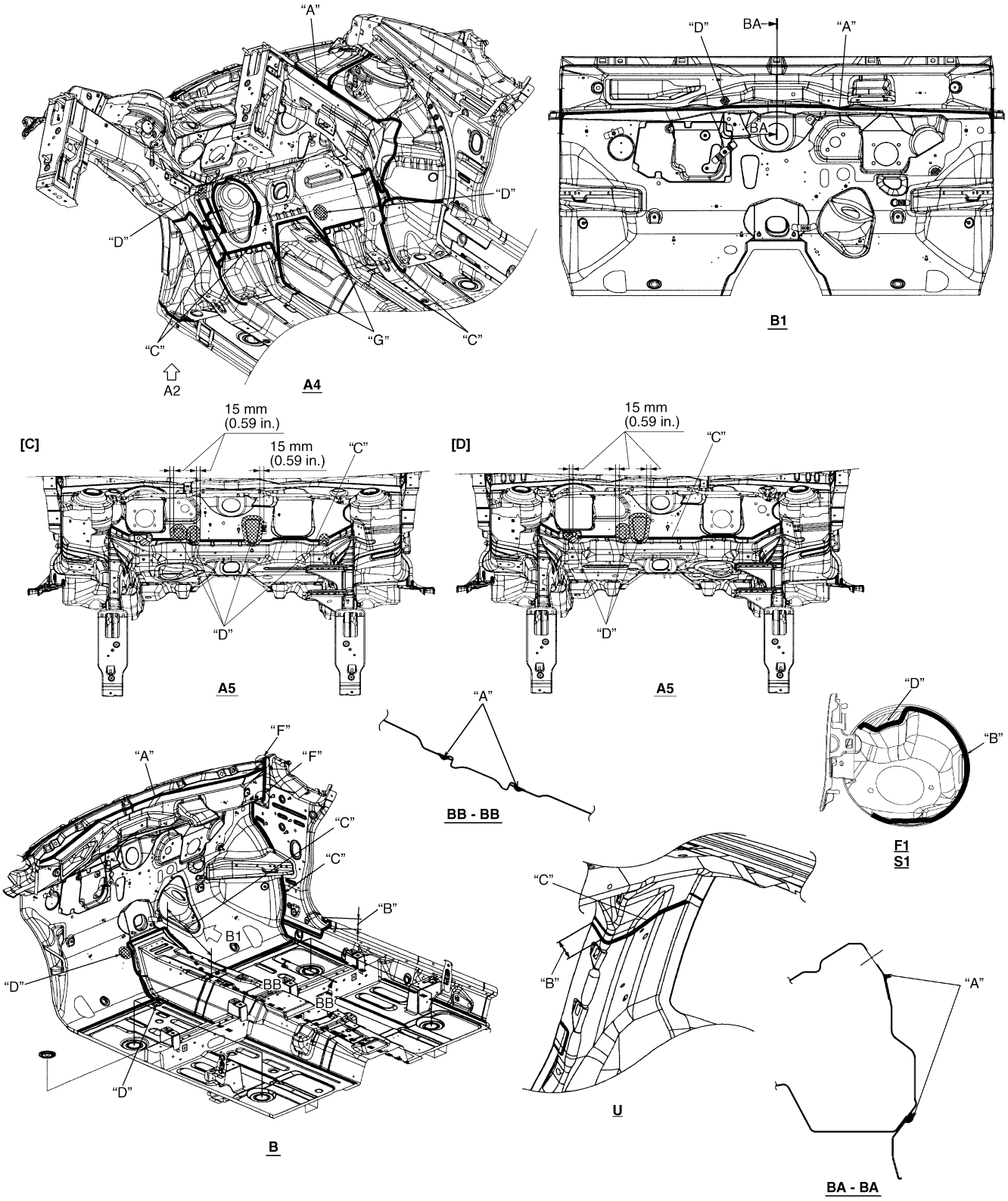

I7RW0A9C0001-01

[A]: Hatchback model	"A": Apply sealant.	"E": Never fill up drain holes with sealant.
[B]: Sedan model	"B": Wipe off excess sealant after application.	"F": Fill gap / hole with sealant.
[C]: RHD	"C": Smooth out sealant with a brush.	"G": R end
[D]: LHD	"D": Do not apply sealant.	

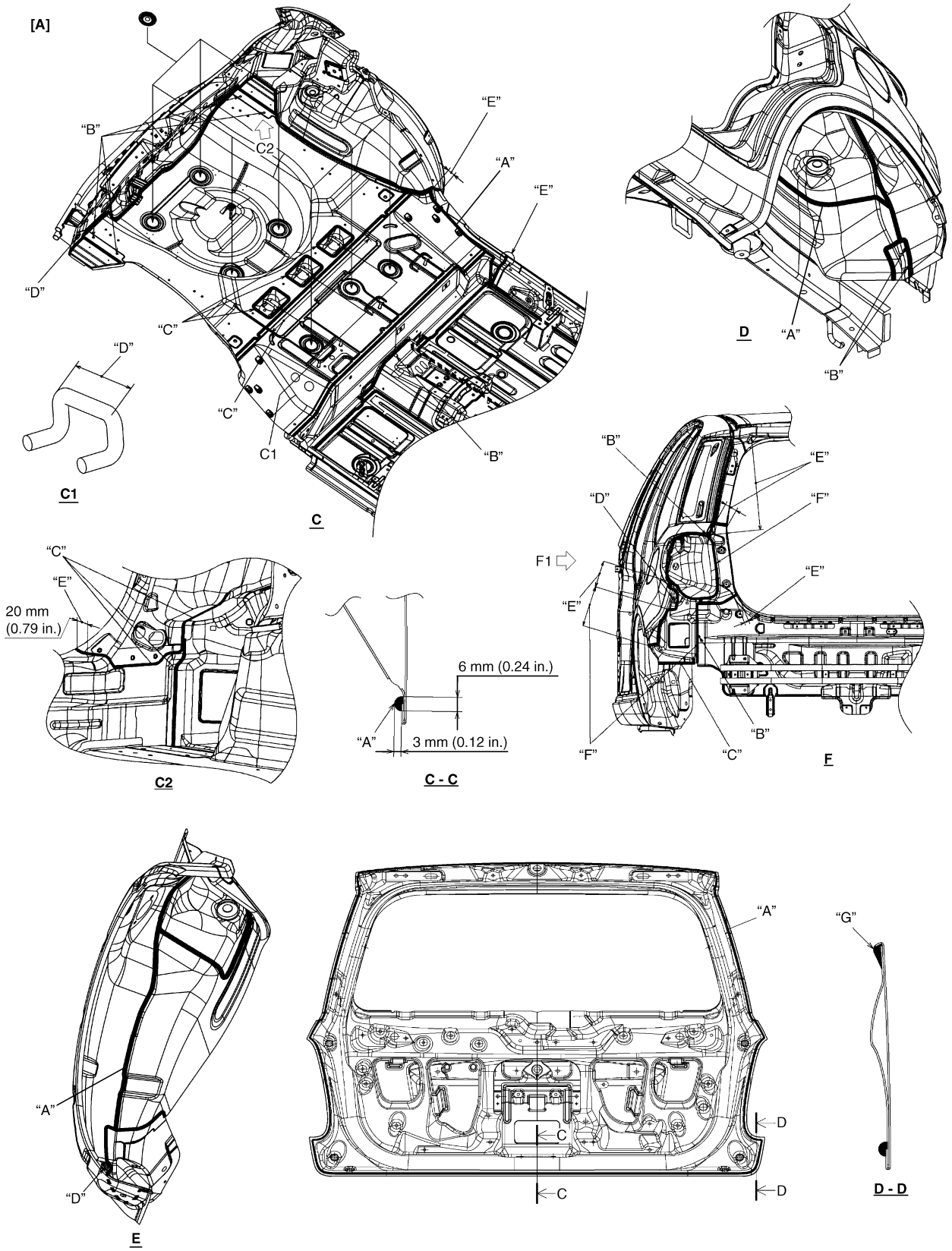

I8RW019C0003-01

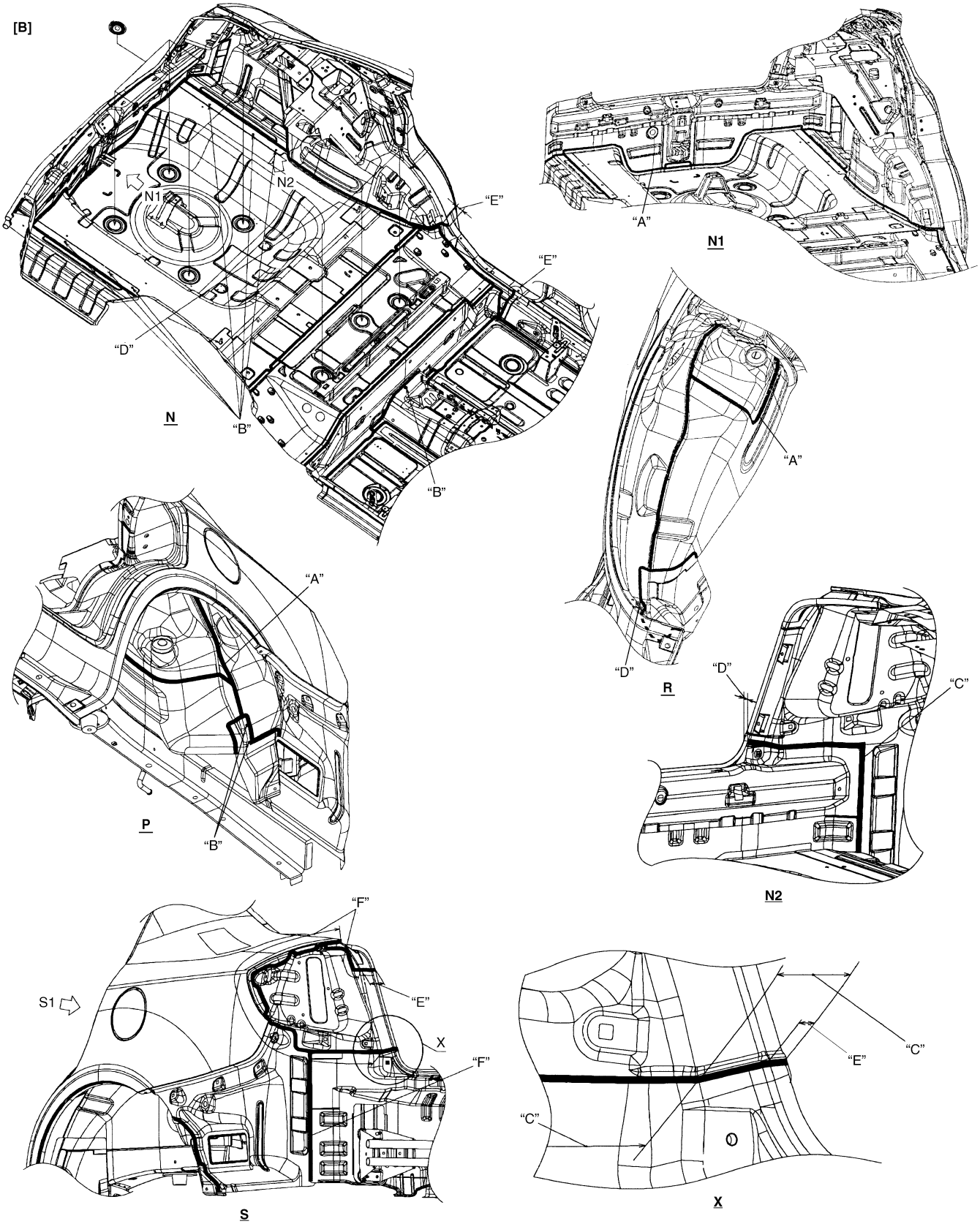

I8RW019C0004-01

[A]: Hatchback model	"B": Fill gap / hole with sealant.	"E": Wipe off excess sealant after application.
[B]: Sedan model	"C": Smooth out sealant with a brush.	"F": Smooth out sealant with a brush. Do not fill hole with sealant.
"A": Apply sealant.	"D": Do not apply sealant.	"G": Apply sealant covering flange end.

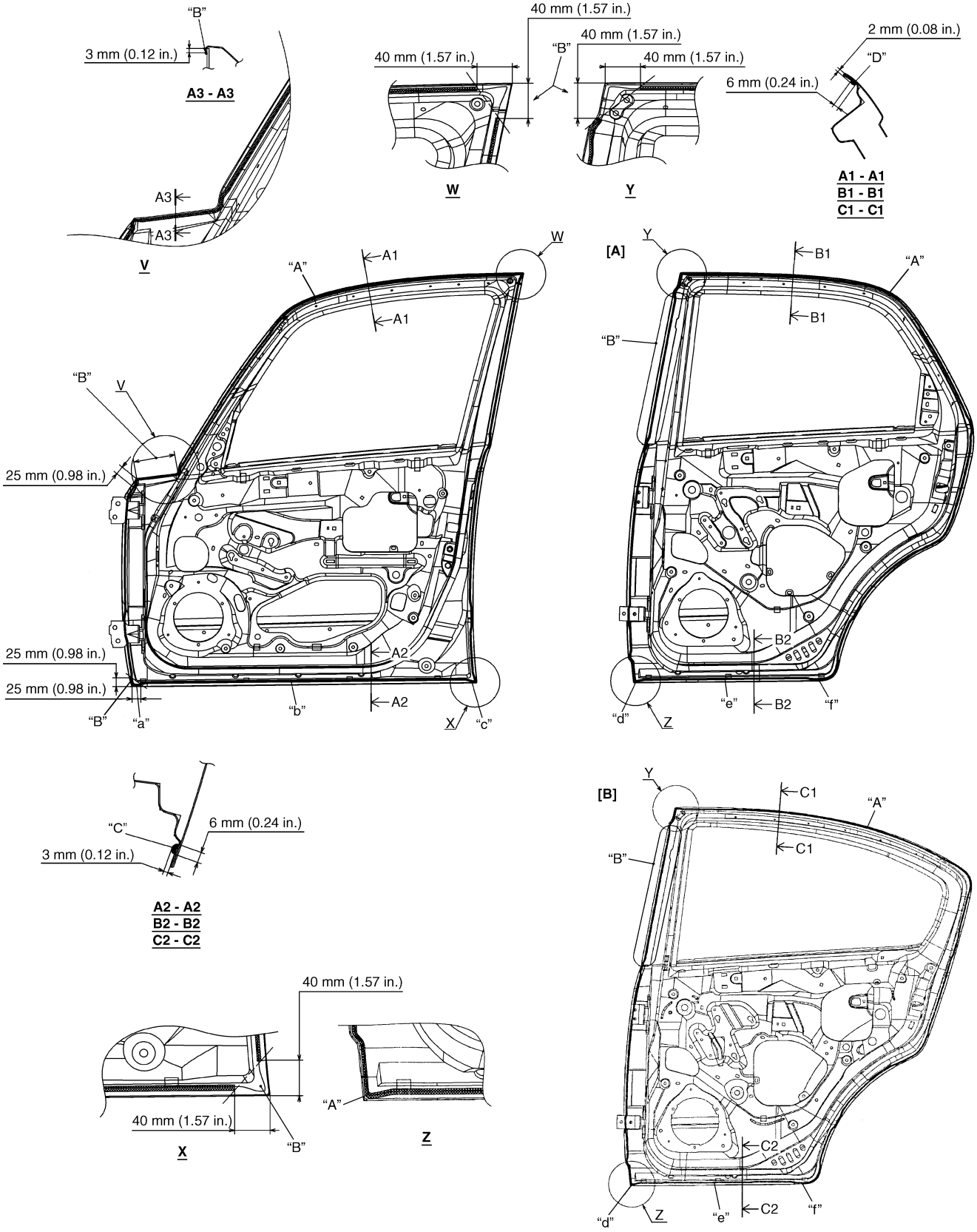

I6RW0B9C0005-01

[A]: Hatchback model	"A": Apply sealant.	"C": Never fill up drain holes ("a" to "f") with sealant.
[B]: Sedan model	"B": Wipe off excess sealant after application.	"D": Apply sealant covering flange end.

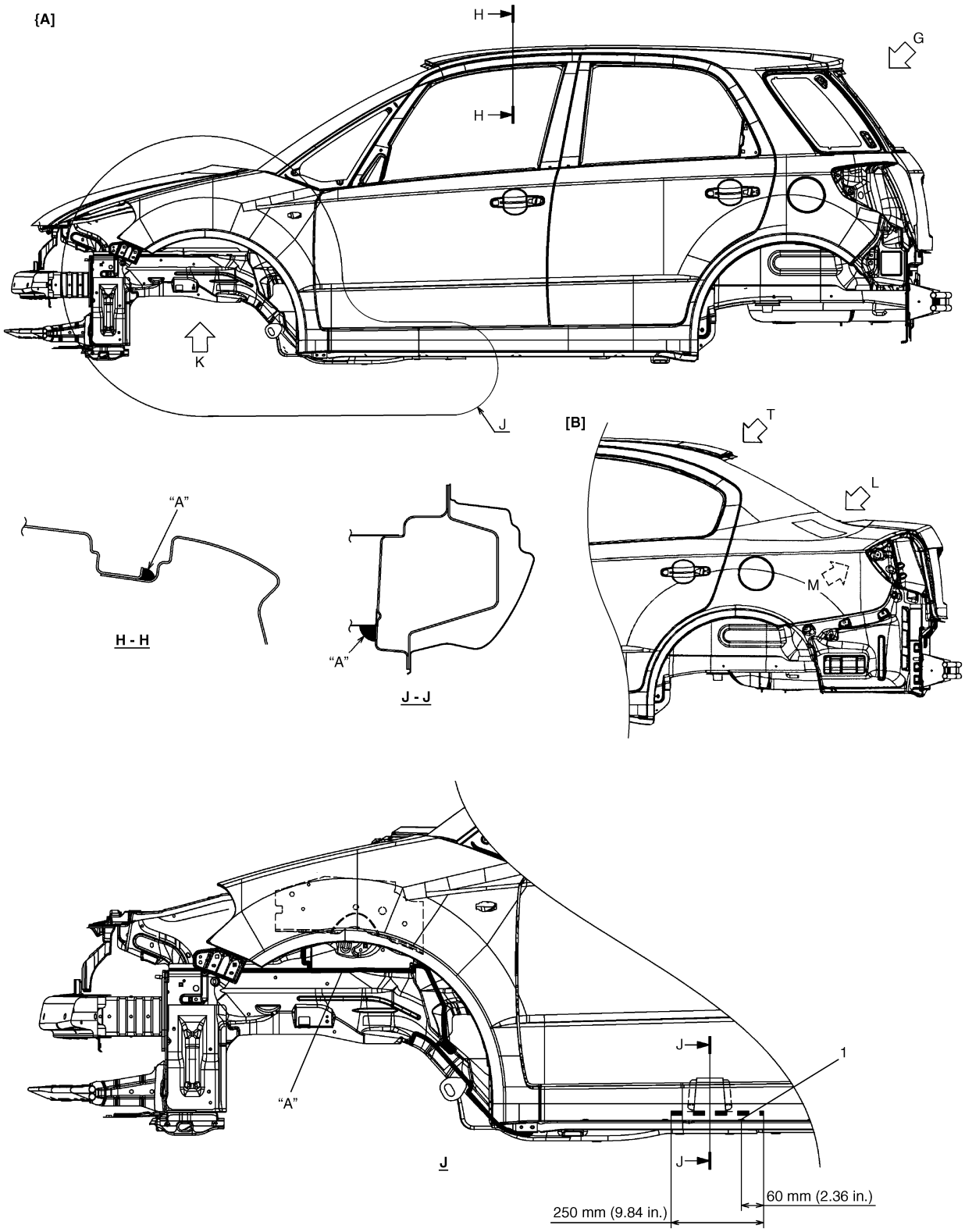

I8RW019C0005-01

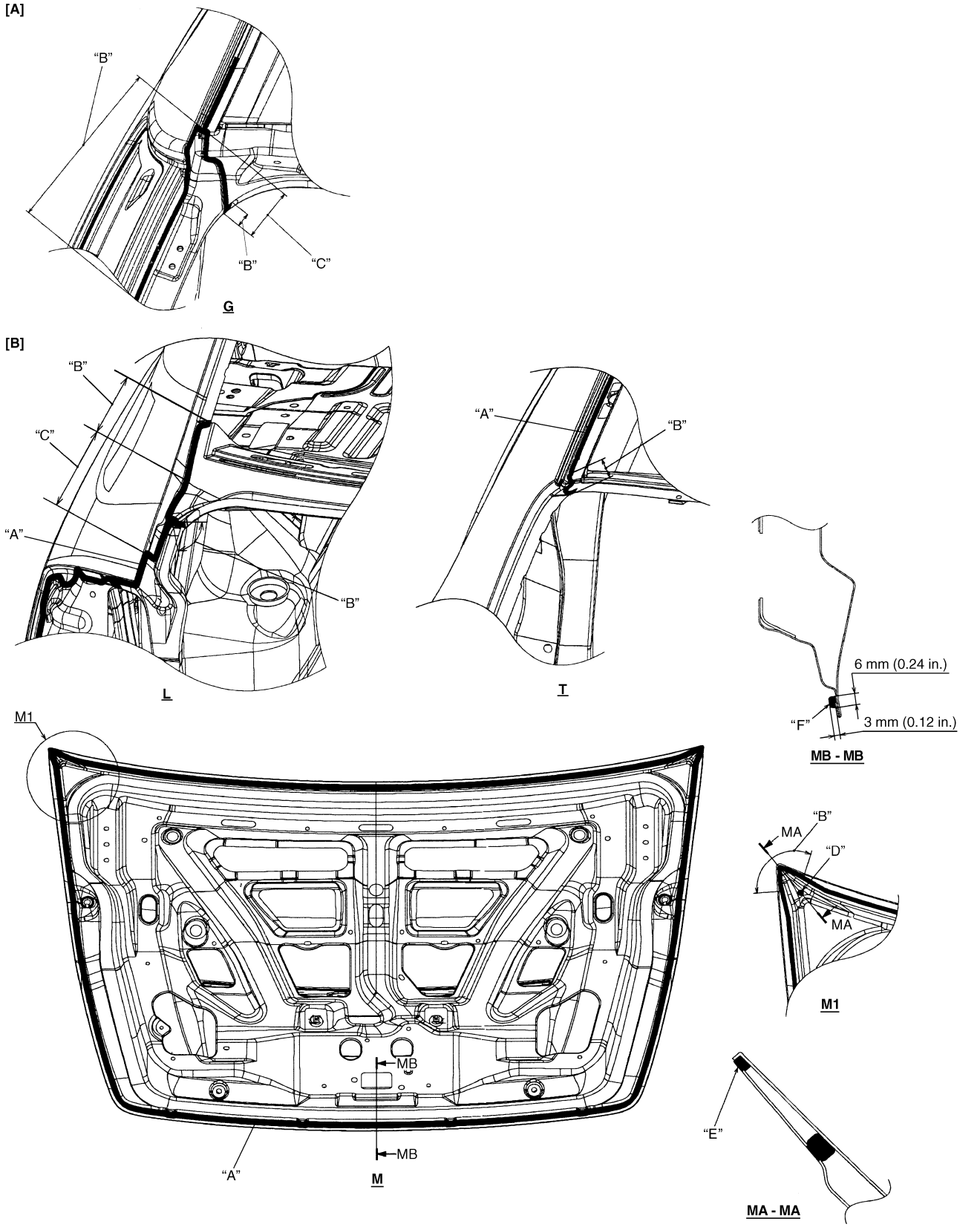

I8RW019C0006-01

[A]: Hatchback model	"B": Wipe off excess sealant application.	"E": Apply sealant covering flange end.
[B]: Sedan model	"C": Smooth out sealant with a brush.	"F": Apply sealant covering flange end. Do not fill hole with sealant.
"A": Apply sealant.	"D": Fill gap / hole with sealant.	1. Hole

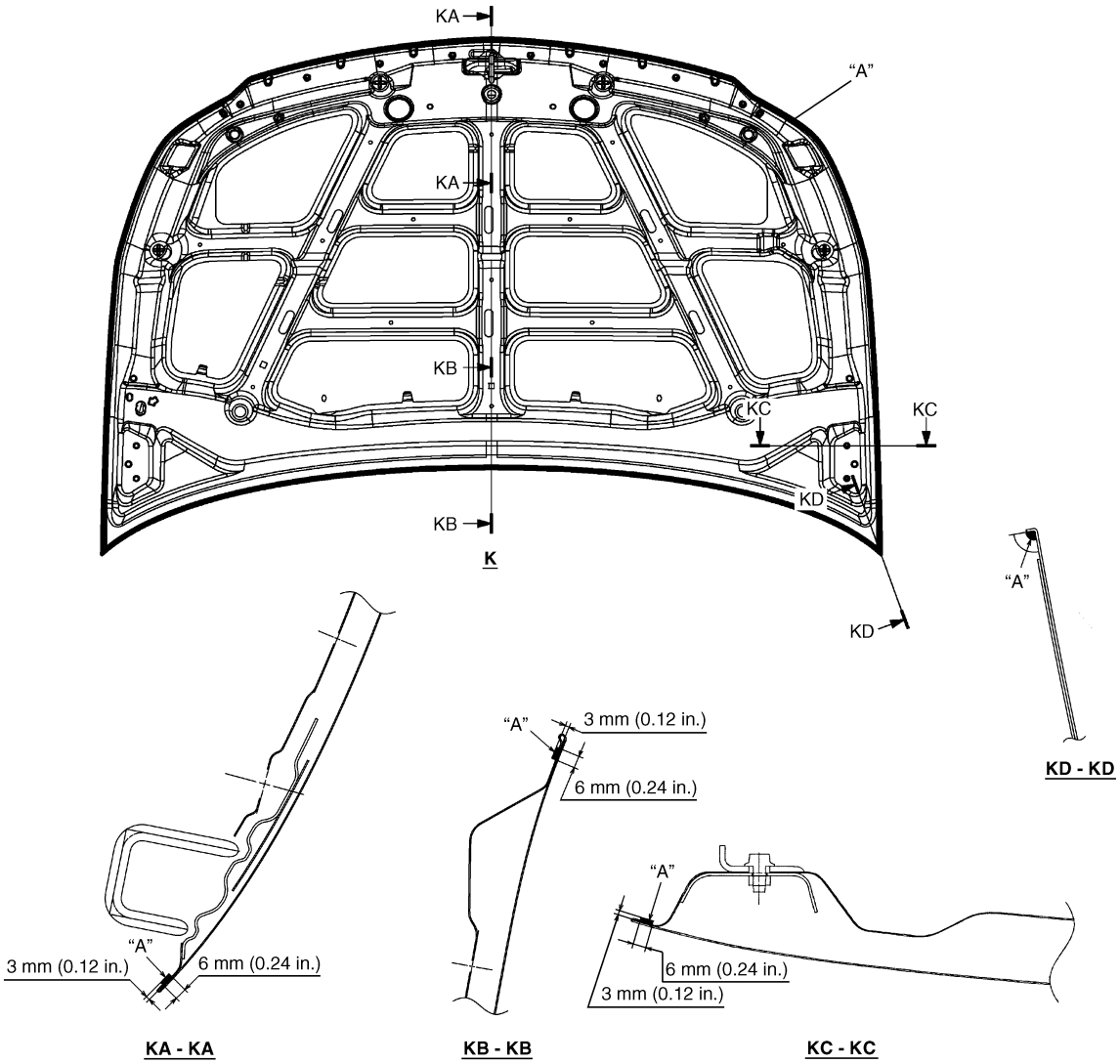

I8RW019C0007-01

"A": Apply sealant covering flange end.

Under Coating Application Areas

S7RW0A9C03002

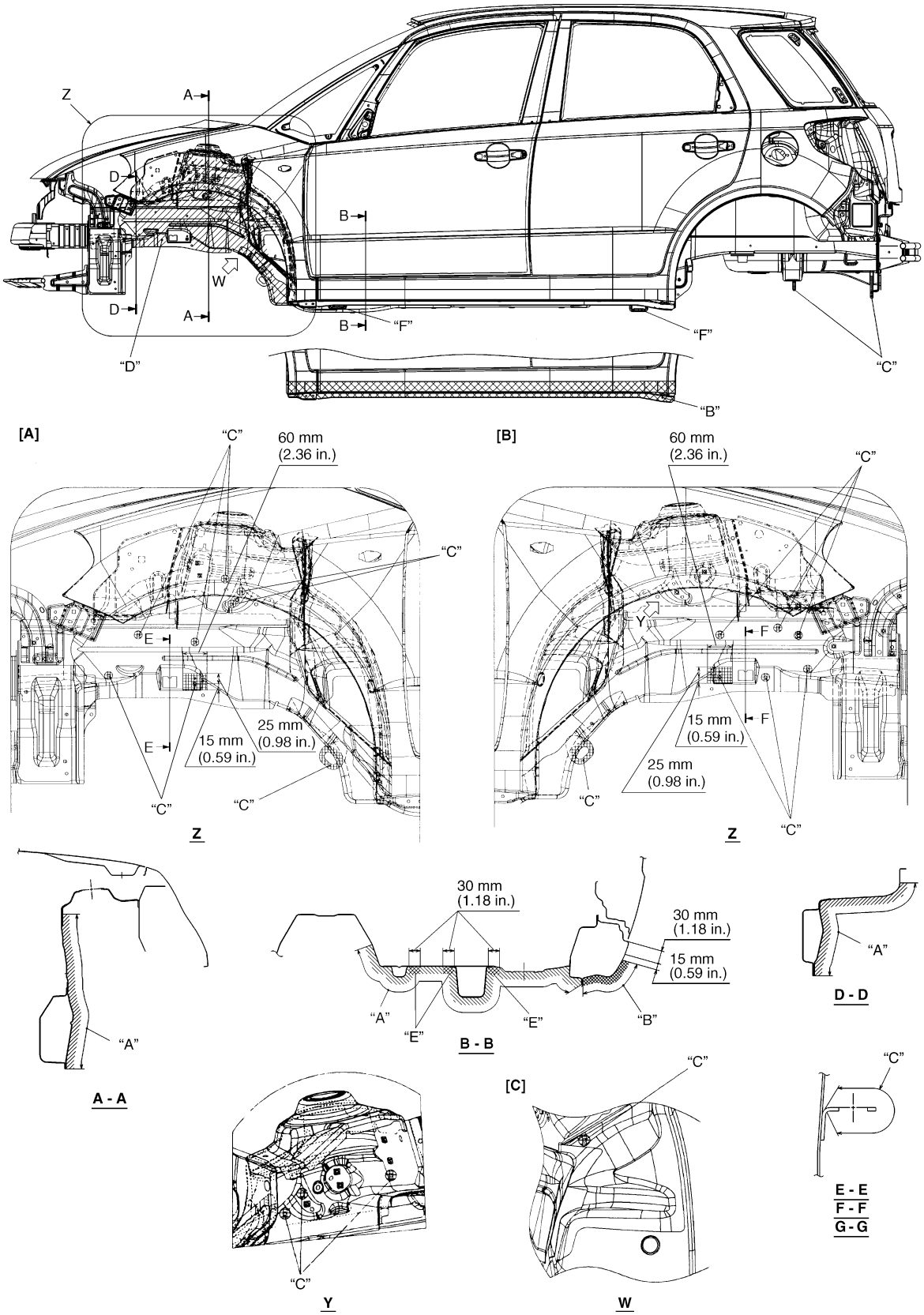

I8RW019C0008-01

[A]: LH side	"C": Do not apply undercoating.
[B]: RH side	"D": Apply under coating (PVC, 400 μm or more) after panting black color.
[C]: Both side	"E": Apply under coating (PVC, 600 μm or more).
"A": Apply undercoating (PVC, 400 μm or more).	"F": Do not apply under coating and anti-clip coat.

“B”: Apply anti-chip coat (300 μm or more) (Except vehicle with splash guard).	

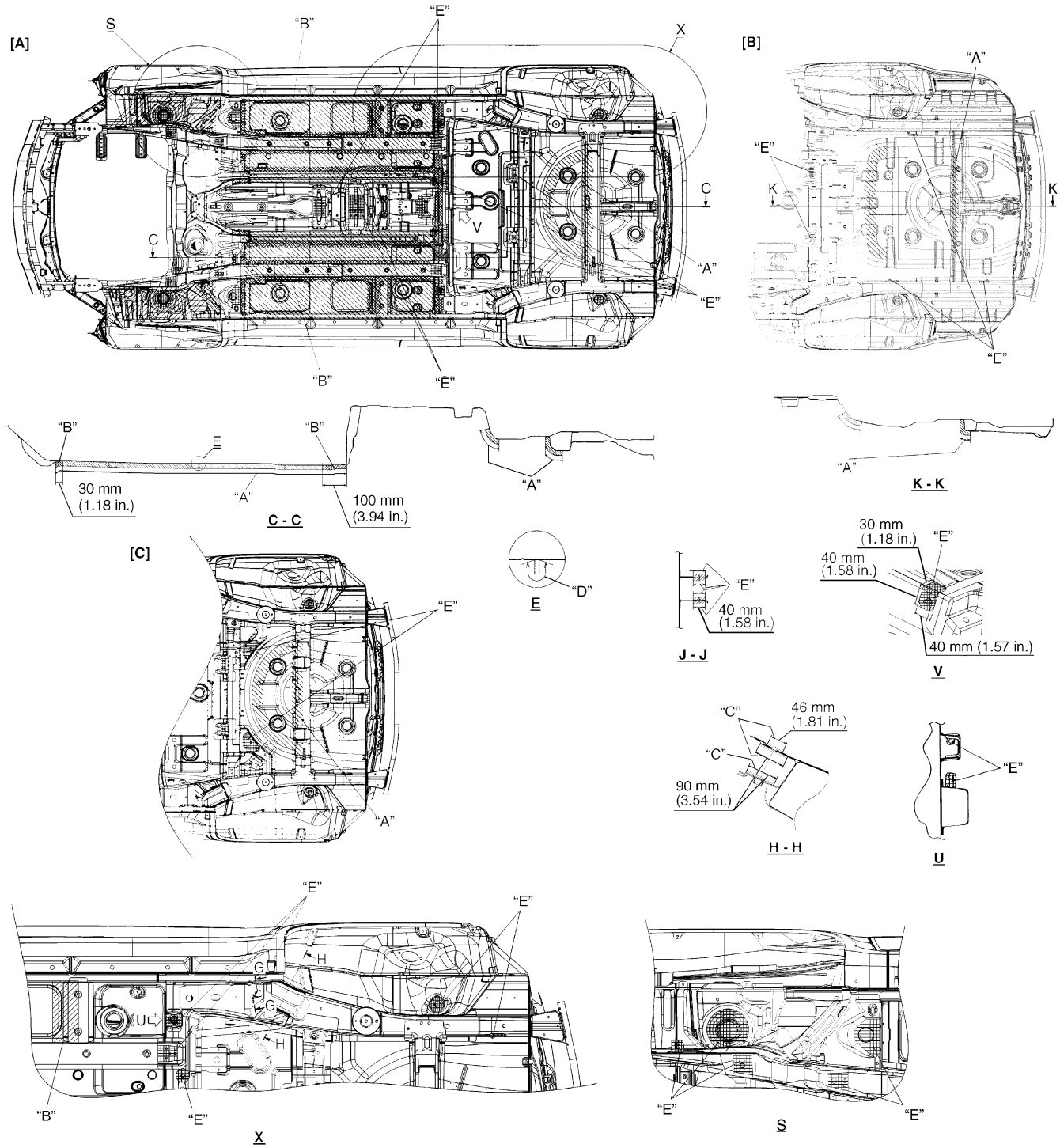

I8RW019C0009-01

[A]: Hatchback model	“A”: Apply undercoating (PVC, 400 μm or more).	“D”: Do not apply undercoating (Apply all stud-bolts).
[B]: Sedan model	“B”: Apply undercoating (PVC, 600 μm or more).	“E”: Do not apply undercoating.
[C]: 4WD model	“C”: Do not apply undercoating and anti-chip coat.	

Anti-Corrosion Compound Application Area

S7RW0A9C03003

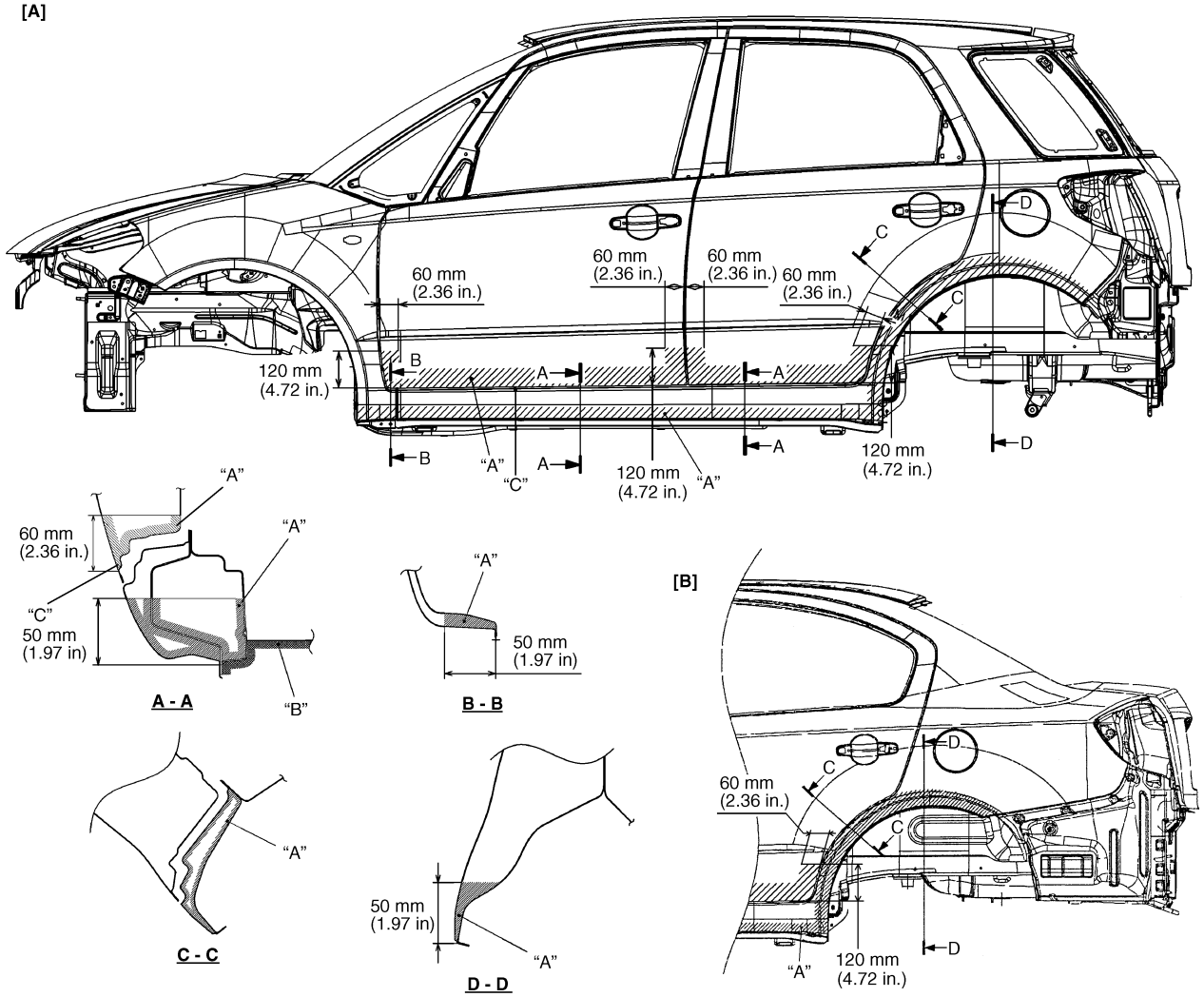

I6RW0B9C0011-01

[A]: Hatchback model	"B": Apply rust proof wax (high viscosity wax 50 μm or more) (with side turn signal light).
[B]: Sedan model	"C": Never fill up drain holes with rust proof wax.
"A": Apply rust proof wax (hot wax 50 μm or more).	

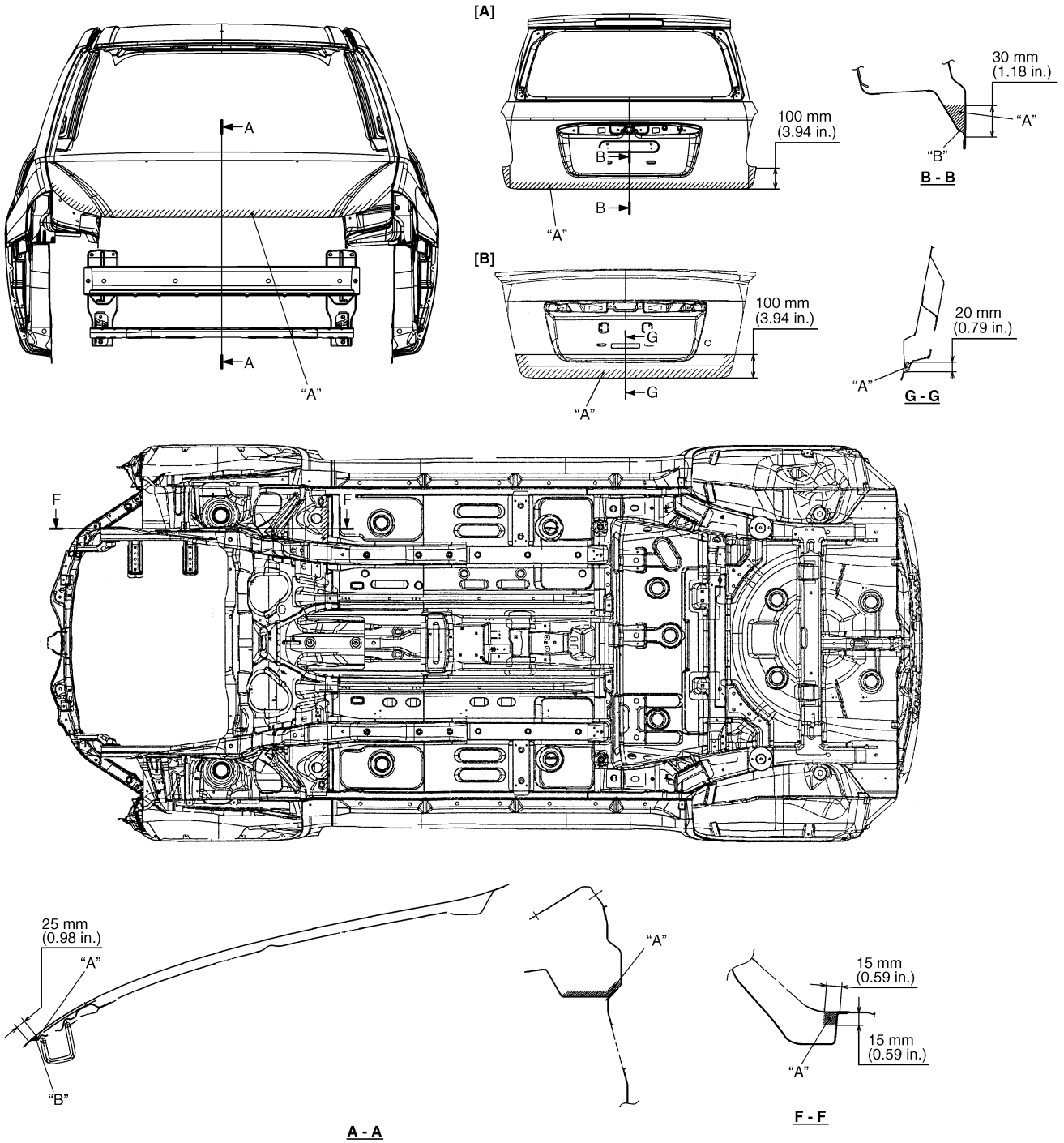

I6RW0B9C0012-01

[A]: Hatchback model	"A": Apply rust proof wax (hot wax 50 μm or more).
[B]: Sedan model	"B": Never fill up drain holes with rust proof wax.

Exterior Trim

Repair Instructions

Roof Molding Removal and Installation

S7RW0A9D06001

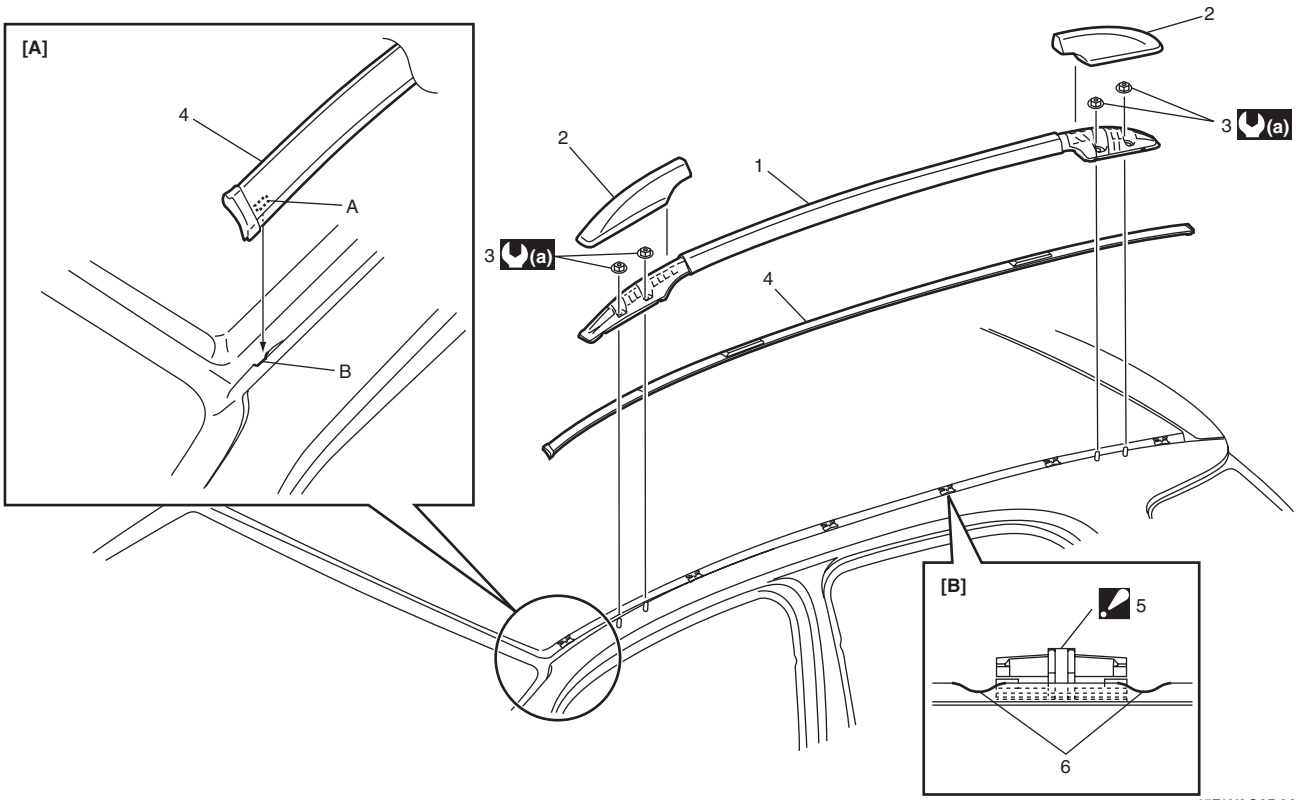

I5RW0C9D0002-04

[A]: Roof molding installation Position roof molding with touching A to B.	3. Roof rail nut (if equipped)
[B]: Roof molding clip installation position	4. Roof molding
A: Positioning rib	5. Roof molding clip (Push-in type) : Install roof molding clip to specified position on body with epoxy adhesive applied.
B: Positioning for roof molding (Edge of panel flange)	6. Groove
1. Roof rail (if equipped)	(a) : 10 N·m (1.0 kgf-m, 7.5 lb-ft)
2. Roof rail cap (if equipped)	

Splash Guard Removal and Installation (If Equipped)

S7RW0A9D06002

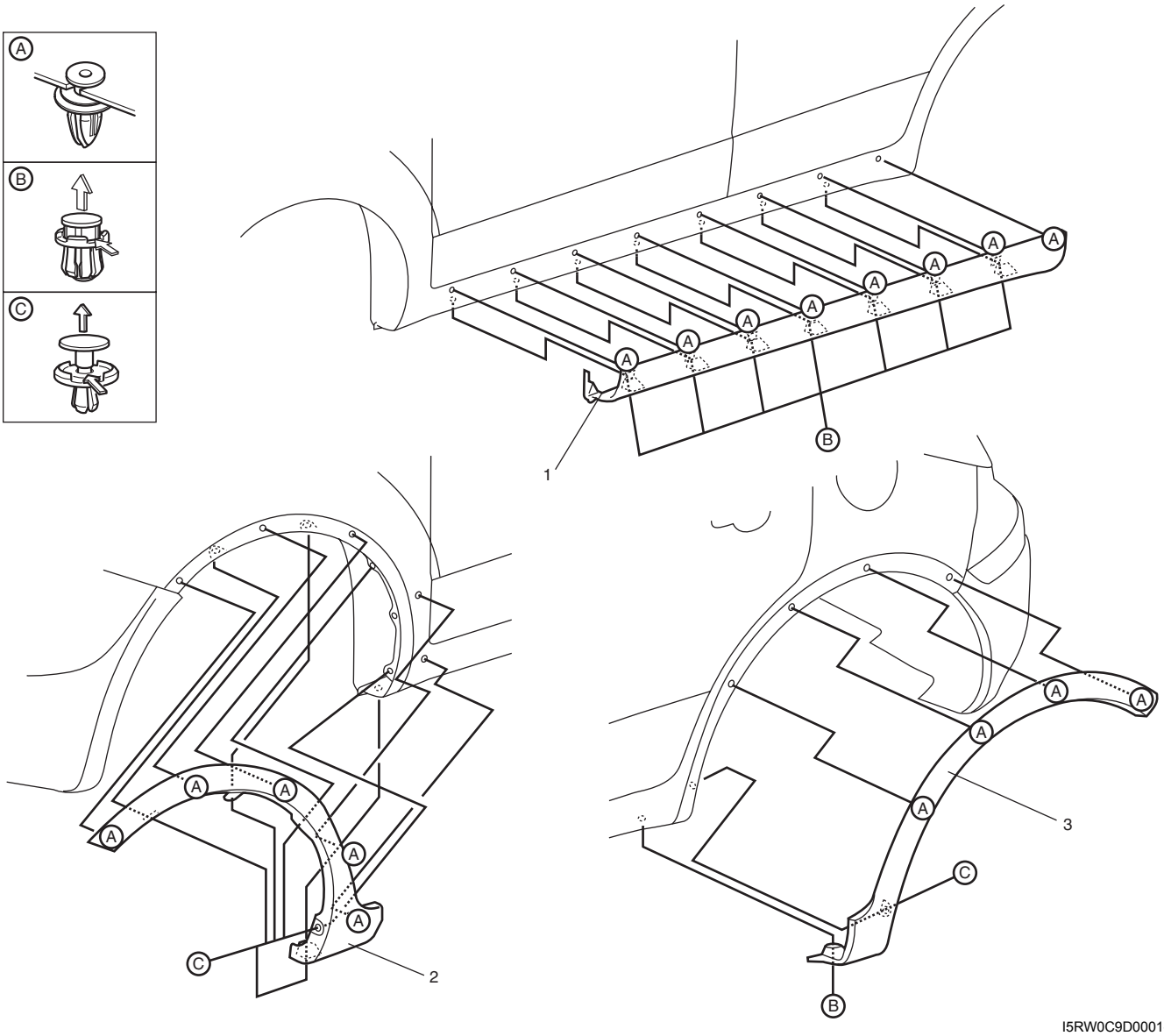

I5RW0C9D0001-02

1. Side sill splash guard	2. Front fender splash guard	3. Rear fender splash guard

Specifications

Tightening Torque Specifications

S7RW0A9D07001

NOTE

The specified tightening torque is also described in the following.
“Roof Molding Removal and Installation”

Reference:
For the tightening torque of fastener not specified in this section, refer to “Fasteners Information in Section 0A”.

Section 10

Control Systems

CONTENTS

Precautions 10-1
- **Precautions 10-1**
  - Precautions for Control Systems 10-1

Body Electrical Control System 10B-1
- **Precautions 10B-1**
  - Precautions in Diagnosing Trouble 10B-1
- **General Description 10B-1**
  - BCM General Description 10B-1
  - CAN Communication System Description 10B-2
  - Theft Deterrent Light Description 10B-3
  - Security Alarm Description (If Equipped) 10B-3
- **Schematic and Routing Diagram 10B-4**
  - Body Electrical Control System Wiring Circuit Diagram 10B-4
  - Connector Layout Diagram of BCM and Junction Block 10B-7
- **Component Location 10B-8**
  - BCM and Related System Component Location 10B-8
- **Diagnostic Information and Procedures 10B-9**
  - BCM Self-Diagnosis Function 10B-9
  - Body Electrical Control System Check 10B-10
  - Scan Tool Data 10B-12
  - DTC Table 10B-14
  - DTC Check 10B-15
  - DTC Clearance 10B-16
  - BCM Power Circuit and Ground Circuit Check 10B-17
  - DTC B1133 (No. 1133): Battery Voltage Too High 10B-18
  - DTC B1141 / B1142 (No. 1141 / No. 1142): Outside Air Temperature (Ambient Temp.) Sensor Circuit Malfunction 10B-19
  - DTC B1150 (No. 1150): Air Bag Communication Circuit Malfunction 10B-20
  - DTC B1157 (No. 1157): Air Bag Deployment Signal Input 10B-21
  - DTC B1170 (No. 1170): EEPROM Access Error 10B-21
  - DTC U0073 (No. 0073): Control Module Communication Bus Off 10B-21
  - DTC U0100 (No. 0100): Lost Communication with ECM 10B-21
  - DTC U0101 (No. 0101): Lost Communication with TCM 10B-21
  - DTC U0155 (No. 0155): Lost Communication with Instrument Panel Cluster (IPC) Control Module 10B-21
  - DTC U1144 (No. 1144): Lost Communication with Keyless Start Control Module 10B-21
  - Inspection of BCM and Its Circuits 10B-22
- **Repair Instructions 10B-29**
  - BCM (Included in Junction Block) Removal and Installation 10B-29
  - Security Alarm Mode Selection Procedure (If Equipped) 10B-30
  - Outside Air Temperature Sensor Removal and Installation 10B-30
  - Outside Air Temperature Sensor Inspection 10B-30
- **Special Tools and Equipment 10B-30**
  - Special Tool 10B-30

Immobilizer Control System 10C-1
- **Precautions 10C-1**
  - Precautions in Diagnosing Troubles 10C-1
  - Precaution in Replacing ECM 10C-1
  - Precaution in Replacing Ignition Key 10C-1
  - Precautions in Handling Immobilizer Control System 10C-1
- **General Description 10C-2**
  - Immobilizer Control System Introduction 10C-2
  - On-Board Diagnostic System Description (Self-diagnosis Function) 10C-2
- **Schematic and Routing Diagram 10C-3**
  - Immobilizer Control System Wiring Circuit Diagram 10C-3
- **Component Location 10C-5**
  - Immobilizer Control System Components Location 10C-5
- **Diagnostic Information and Procedures 10C-5**
  - Immobilizer Control System Check 10C-5
  - DTC Check 10C-6
  - DTC Clearance 10C-6
  - DTC Table 10C-7
  - Scan Tool Data 10C-8
  - Immobilizer Indicator Light Does Not Come ON with Ignition Switch ON and Engine Stop 10C-9

Immobilizer Indicator Light Remains ON after Engine Start 10C-10
DTC P1614: Transponder Response Error 10C-10
DTC P1615: Steering Lock Unit Communication Error 10C-11
DTC P1616: Unregistered Keyless Start Control Module 10C-12
DTC P1618: Keyless Start Control Module CAN Communication Error 10C-13
DTC P1621: Immobilizer Communication Line Error 10C-13
DTC P1622: EEPROM Reading / Writing Error 10C-14
DTC P1623: Unregistered Transponder 10C-14
DTC P1625: Immobilizer Antenna Error 10C-15
DTC P1636: Immobilizer Information Registration Failure 10C-15
DTC P1638: Immobilizer Information Mismatched 10C-16
Inspection of ICM and Its Circuit 10C-17
Repair Instructions 10C-19
ICM Removal and Installation 10C-19
Registration of the Ignition Key 10C-19
Procedure after ECM Replacement 10C-19
Special Tools and Equipment 10C-20
Special Tool 10C-20

Keyless Start System 10E-1

Precautions 10E-1
Precautions in Diagnosing Troubles 10E-1
General Description 10E-2
Keyless Start System Description 10E-2
Parts and Functions 10E-3
Keyless Engine Start Function 10E-4
Door Lock Function of Keyless Start System 10E-5
Trunk Lid Opener Function of Keyless Start System (Sedan) 10E-6
Operation Area of Remote Controller 10E-7
Alarm Function 10E-8
CAN Communication System Description 10E-8
Schematic and Routing Diagram 10E-9
Keyless Start System Electric Wiring Circuit Diagram 10E-9
Diagnostic Information and Procedures 10E-10
Self-Diagnosis Function 10E-10
Keyless Start System Diagnosis Introduction 10E-10
Keyless Start System Check 10E-10
Customer Questionnaire (Example) 10E-11
Key Indicator Light Check 10E-11
DTC Check 10E-12
DTC Table 10E-13
DTC Clearance 10E-13
Keyless Start System Symptom Diagnosis 10E-14
Keyless Start System Operation Inspection 10E-16
Door Lock Operation (Keyless Start System) 10E-16
Inspection of Keyless Start Control Module and Its Circuits 10E-16
No DTC Detection After Performing DTC Check 10E-22
Key Indicator Light Circuit Check (Key Indicator Light Doesn't Light when Ignition Knob Switch is Pushed) 10E-23
Keyless Start Control Module Power and Ground Circuit Check 10E-25
DTC No. 11: Communication Error with Steering Lock Unit 10E-26
DTC No. 13 / No. 14: Release Signal Error from Steering Lock Unit / Steering Lock Unit Malfunction 10E-27
DTC No. 21 / No. 22: Internal Error of Keyless Start Control Module (EEPROM Reading Error) / (EEPROM Writing Error) 10E-27
DTC No. 31: Lost Communication with BCM 10E-28
DTC No. 33: Control Module Communication Bus Off 10E-28
DTC No. 51 / No. 52 / No. 53: Driver Side / Passenger Side / Rear End Door / Trunk Lid Request Switch Failure 10E-28
Repair Instructions 10E-29
Antennas and Request Switches Removal and Installation 10E-29
Front Door (Driver and Passenger Side), Rear End Door / Trunk Lid Request Switch Inspection 10E-30
Steering Lock Unit Removal and Installation 10E-30
Steering Lock Unit Inspection 10E-30
Front Door Lock Switch Inspection 10E-31
Keyless Start Control Module Removal and Installation 10E-31
Remote Controller Inspection 10E-31
Replacement of Remote Controller Battery 10E-31
Registration Procedure for Remote Controller ID Code 10E-32
Keyless Start Registration 10E-33

Precautions

Precautions

Precautions for Control Systems

S7RW0AA000001

Air Bag Warning
Refer to “Air Bag Warning in Section 00”.

Precaution of Troubleshooting for CAN
Refer to “Precaution on CAN Troubleshooting in Section 1A”.

Body Electrical Control System

Precautions

Precautions in Diagnosing Trouble

S7RW0AA200001

- Diagnostic information stored in BCM memory can be cleared as well as checked by using SUZUKI scan tool. Before using scan tool, read its Operator's (Instruction) Manual carefully to have good understanding as to what functions are available and how to use it.
- Be sure to read "Precautions for Electrical Circuit Service in Section 00" before inspection and observe what is written there.
- Communication of ECM, TCM (A/T model), ABS or ESP® control module, 4WD control module (if equipped), keyless start control module (if equipped), combination meter and BCM is established by CAN (Controller Area Network). For detail of CAN communication for BCM, refer to "CAN Communication System Description". Therefore, handle CAN communication line with care referring to "Precaution for CAN Communication System in Section 00".

General Description

BCM General Description

S7RW0AA201001

The Body electrical Control Module (BCM) is incorporated in junction block. Do not attempt removal of BCM from junction block as it may cause contact failure.
The BCM incorporates relays and controllers which are used for the following systems and controls them.

- Power door lock
- Keyless entry
- Door lock function of keyless start system (if equipped)
- Rear wiper
- Combination meter
- Interior light
- Warning buzzer
- Rear end door window / back window defogger and door mirror heater (if equipped)
- Rear end door opener (if equipped)
- Trunk lid opener function of keyless start system (if equipped)
- Theft deterrent light

Also, the BCM has a function to cause the interior light and open door warning light in the combination meter to turn off when any door is left open for longer than 15 minutes to reduce wasteful battery consumption.
In addition, it is possible to check operation of actuator which is controlled by BCM by using the output test function of SUZUKI scan tool to operate actuator simulatively.

CAN Communication System Description

S7RW0AA201002

Refer to “CAN Communication System Description in Section 1A” for CAN communication system description.
BCM communication control data with each control module as follows.

BCM Transmission Data

				ECM	Combination Meter	ESP® Control Module (if equipped)	Keyless Start Control Module (if equipped)
BCM	Transmit	DATA	A/C switch ON signal	○			
			Electric load signal	○			
			Brake fluid level switch signal		○		
			Parking brake switch signal		○	○	
			Diagnostic trouble code (DTC)		○		
			Illumination ON signal		○		
			Seat belt buckle switch signal		○		
			Charging system signal		○		○
			Engine oil pressure switch signal		○		○
			Door switch status		○		○
			Door lock status				○
			Trunk lid switch status				○

I7RW0AA20001-03

BCM Reception Data

				ECM	TCM (A/T model)	Combination Meter	Keyless Start Control Module (if equipped)
BCM	Receive	DATA	Engine speed signal	○			
			Engine coolant temperature signal	○			
			Vehicle speed signal	○			
			Brake pedal switch signal	○			
			A/C compressor clutch signal	○			
			A/C refrigerant pressure signal	○			
			Fuel consumption signal	○			
			Engine type signal	○			
			Transmission range sensor signal		○		
			Combination meter spec signal			○	
			Ignition knob switch signal				○
			Door lock/unlock request signal				○
			Trunk lid open request signal				○
			Buzzer request signal				○
			Answer back request signal				○

I7RW0AA20002-01

Theft Deterrent Light Description

S7RW0AA201003

The information display or clock (1) of this vehicle includes a theft deterrent light (2) for the theft preventive purpose. The BCM makes the theft deterrent light flash at certain intervals after the ignition switch is turned off until it is turned on again. Also, DTCs stored in BCM can be checked by reading the flashing patterns of the theft deterrent light when diagnosing troubles.

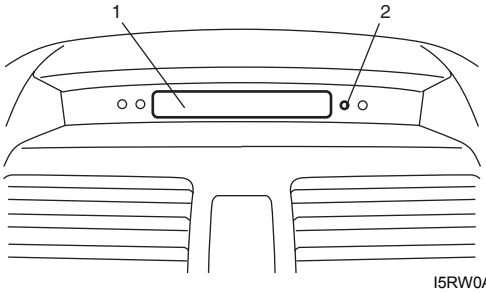

I5RW0AA20003-01

Security Alarm Description (If Equipped)

S7RW0AA201004

Operation

The security alarm system provides a warning of an abnormal condition to those who are around. Its operation is as follows. While the system is in the stand-by mode (when 20 seconds or more elapsed after the door is locked using a keyless entry transmitter or door request switch), BCM monitors door lock status, door switch status and battery power supply voltage. When it detects an abnormal condition (door is unlocked by some way other than using keyless entry transmitter or door request switch and opened or cut off BCM power supply voltage temporarily), it activates the warning buzzer (located in BCM), theft deterrent light, hazard warning relay and horn relay.
The security alarm system has 2 selectable modes.

- A mode: No operation
- B mode: Theft deterrent light blinks, hazard warning lights blink, warning buzzer (located in BCM) sounds and horn sounds

When “B” mode is selected and the door is locked using keyless entry transmitter or door request switch, the theft deterrent light (1) flashes at 0.1 second interval for 20 seconds and the security alarm system is set to the stand-by mode (2). Once it is set to the stand-by mode, the theft deterrent light blinks at 2 second intervals.
When the system is set to stand-by mode and the door is unlocked by some way other than using keyless entry transmitter or door request switch and opened or cut off BCM power supply voltage temporarily, the alarm devices operate according to the selected mode as described above.

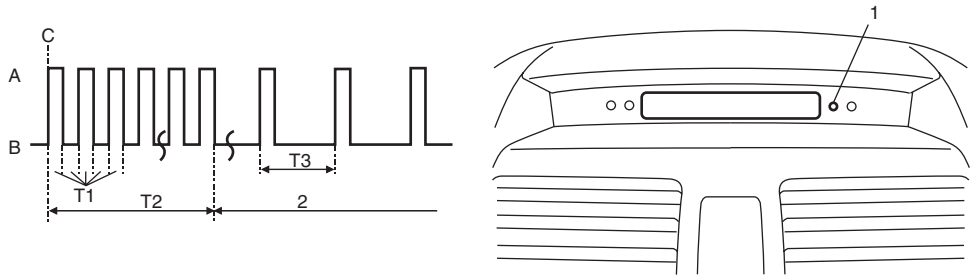

I7RW01A20015-01

A: Indicator light turned ON	T1: 0.1 seconds
B: Indicator light turned OFF	T2: 20 seconds
C: When door is locked using keyless entry transmitter or door request switch	T3: 2 seconds

The alarm stops under either of the following conditions.

- Ignition switch is turned ON
- A certain time has elapsed since the alarm started

For selection of the mode of the security alarm system, refer to “Security Alarm Mode Selection Procedure (If Equipped)”.

Input / Output Table

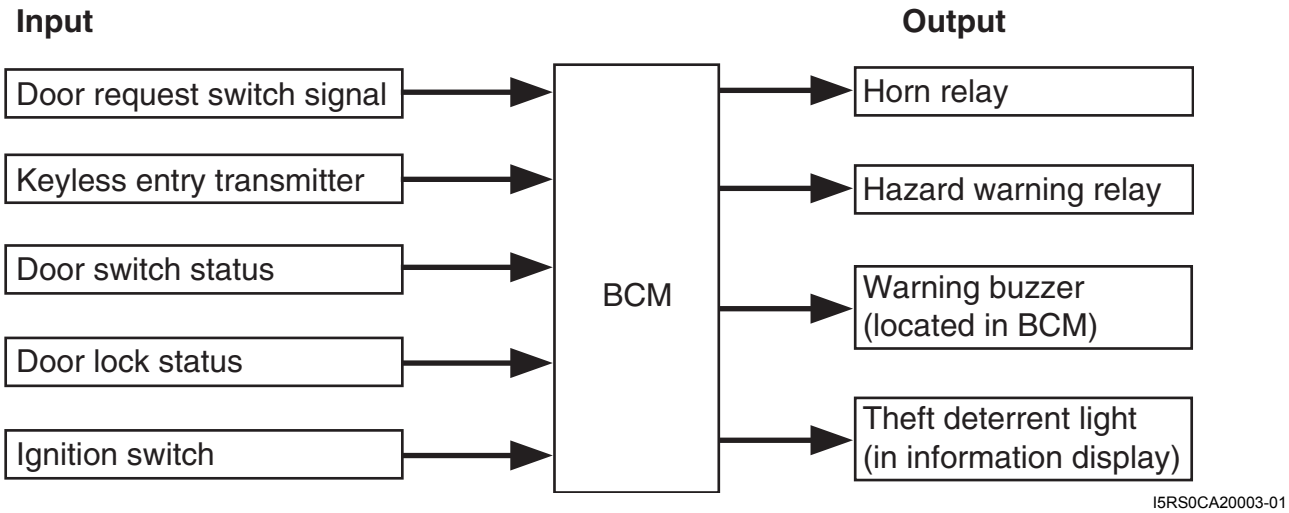

Schematic and Routing Diagram

Body Electrical Control System Wiring Circuit Diagram

S7RW0AA202001

NOTE

This wiring diagram shows circuits related to only BCM, not the entire circuits of BCM and junction block. Refer to “Power Supply Diagram in Section 9A” for wiring circuits other than the figure below.

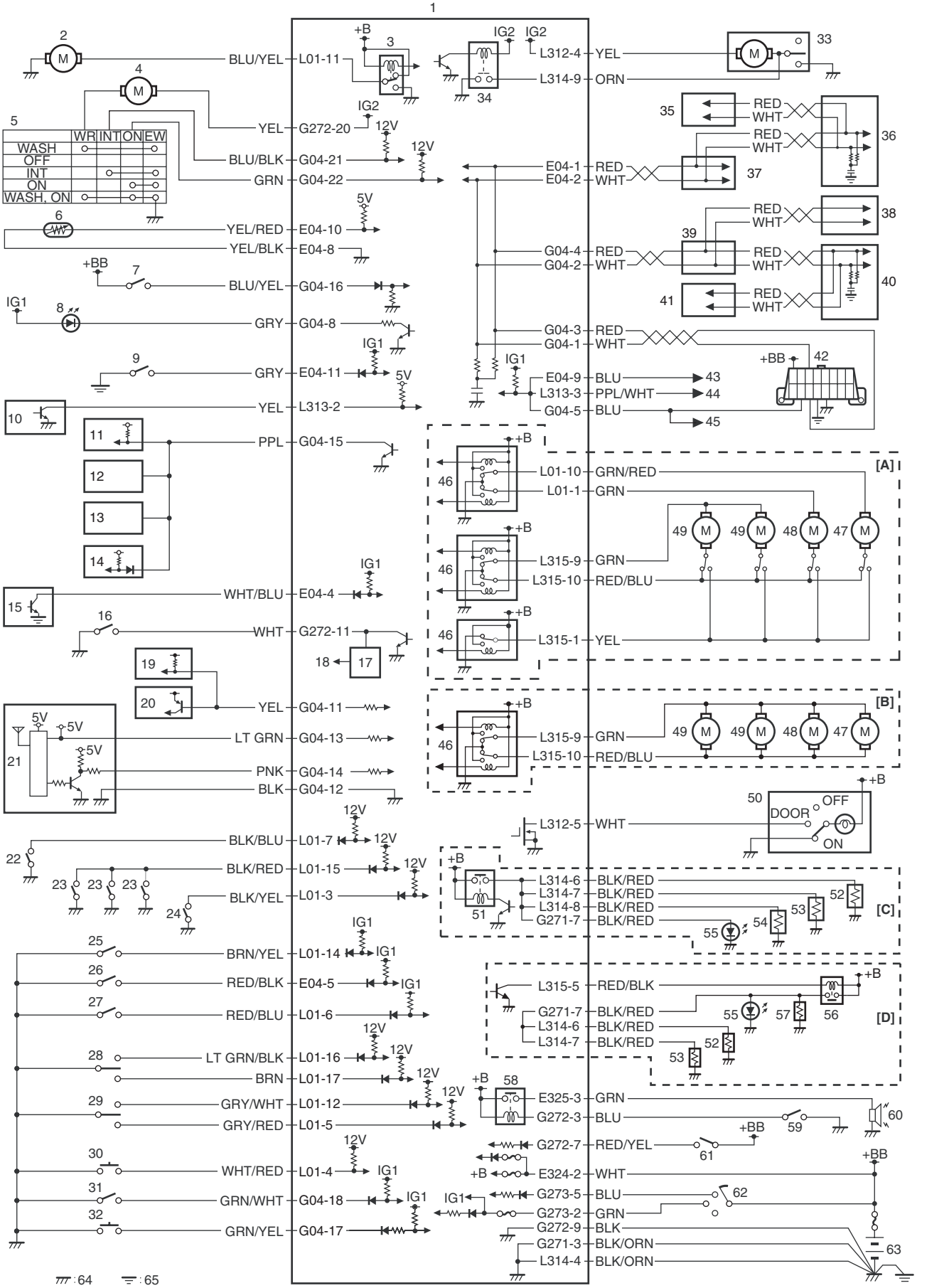
WR INT ON EW
WASH
OFF
INT
ON
WASH. ON
BLU/YEL L01-11
YEL G272-20
BLU/BLK G04-21
GRN G04-22
YEL/RED E04-10
YEL/BLK E04-8
BLU/YEL G04-16
GRY G04-8
GRY E04-11
YEL L313-2
PPL G04-15
WHT/BLU E04-4
WHT G272-11
YEL G04-11
LT GRN G04-13
PNK G04-14
BLK G04-12
BLK/BLU L01-7
BLK/RED L01-15
BLK/YEL L01-3
BRN/YEL L01-14
RED/BLK E04-5
RED/BLU L01-6
LT GRN/BLK L01-16
BRN L01-17
GRY/WHT L01-12
GRY/RED L01-5
WHT/RED L01-4
GRN/WHT G04-18
GRN/YEL G04-17
L312-4 YEL
L314-9 ORN
E04-1 RED
E04-2 WHT
G04-4 RED
G04-2 WHT
G04-3 RED
G04-1 WHT
E04-9 BLU
L313-3 PPL/WHT
G04-5 BLU
L01-10 GRN/RED
L01-1 GRN
L315-9 GRN
L315-10 RED/BLU
L315-1 YEL
L312-5 WHT
L314-6 BLK/RED
L314-7 BLK/RED
L314-8 BLK/RED
G271-7 BLK/RED
L315-5 RED/BLK
E325-3 GRN
G272-3 BLU
G272-7 RED/YEL
E324-2 WHT
G273-5 BLU
G273-2 GRN
G272-9 BLK
G271-3 BLK/ORN
L314-4 BLK/ORN
DOOR
OFF
ON
[A]
[B]
[C]
[D]
:64
:65
I7RW0AA20003-03

[A]: Without security alarm system	20. HVAC control module (if equipped)	43. To ABS / ESP® control module and P/S control module
[B]: With security alarm system	21. Keyless entry receiver (if equipped)	44. To SDM
[C]: Hatchback	22. Driver side door switch	45. To HVAC control module (if equipped)
[D]: Sedan	23. Other than driver side door switch	46. Door lock actuator relay (if equipped)
1. BCM	24. Rear end door / trunk lid switch	47. Driver side door lock actuator (if equipped)
2. Rear end door / trunk lid opener actuator (if equipped)	25. Driver side seat belt switch	48. Passenger side door lock actuator (if equipped)
3. Rear end door / trunk lid opener relay (if equipped)	26. Brake fluid level switch	49. Rear door lock actuator (if equipped)
4. Rear washer motor	27. Parking brake switch	50. Interior light
5. Rear wiper and washer switch	28. Door key cylinder switch (included in door lock actuator) (if equipped)	51. Rear end door window defogger relay
6. Outside air temperature sensor (if equipped)	29. Manual door lock switch (if equipped)	52. Right side door mirror heater (if equipped)
7. Key reminder switch	30. Rear end door opener switch (if equipped)	53. Left side door mirror heater (if equipped)
8. Theft deterrent light	31. A/C switch (if equipped)	54. Rear end door window defogger
9. Oil pressure switch	32. Rear end door window / back window defogger switch	55. Rear end door window / back window defogger indicator light
10. SDM	33. Rear wiper motor	56. Back window defogger relay
11. P/S control module	34. Rear wiper relay	57. Back window defogger
12. Navigation (if equipped)	35. TCM (A/T model)	58. Horn relay
13. Audio unit (if equipped)	36. ECM	59. Horn switch
14. Headlight leveling control module (if equipped)	37. ABS / ESP® control module	60. Horn
15. Generator	38. Keyless start control module (if equipped)	61. Lighting switch
16. Hazard warning switch	39. CAN junction connector	62. Ignition switch
17. Turn signal and hazard warning relay	40. Combination meter	63. Battery
18. To turn signal light	41. 4WD control module (if equipped)	64. Body ground
19. Information display (if equipped)	42. DLC	65. Engine ground

Connector Layout Diagram of BCM and Junction Block

S7RW0AA202002

BCM and Junction Block Connectors (Viewed from Harness Side)

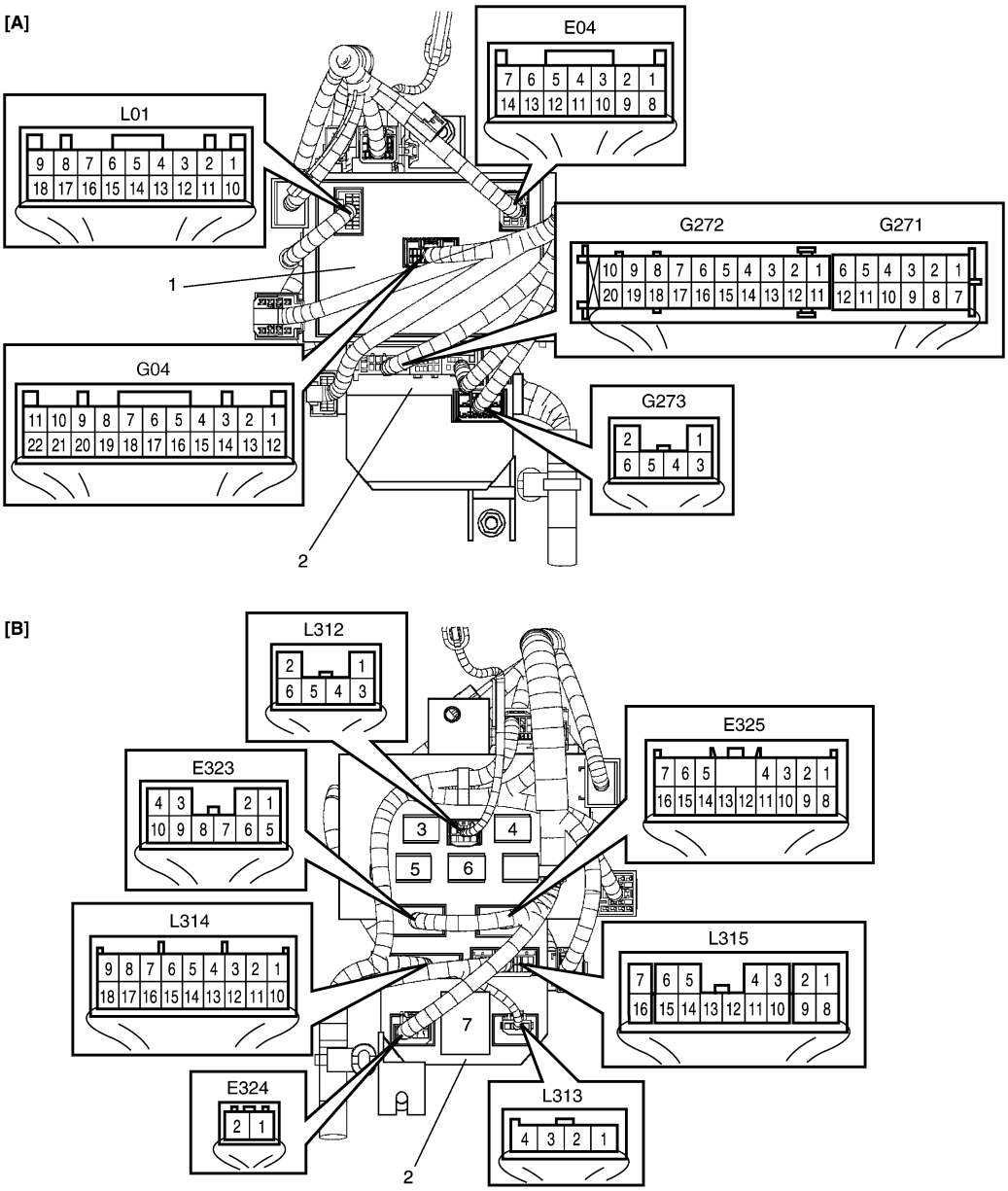

I6RW0CA20004-01

[A]: Junction block (viewed from BCM side)	2. Junction block	5. Rear wiper relay
[B]: Junction block (viewed from relay side)	3. Blower motor relay	6. Rear end door window defogger relay
1. BCM	4. Horn relay	7. Turn signal and hazard warning relay

Component Location

BCM and Related System Component Location

S7RW0AA203001

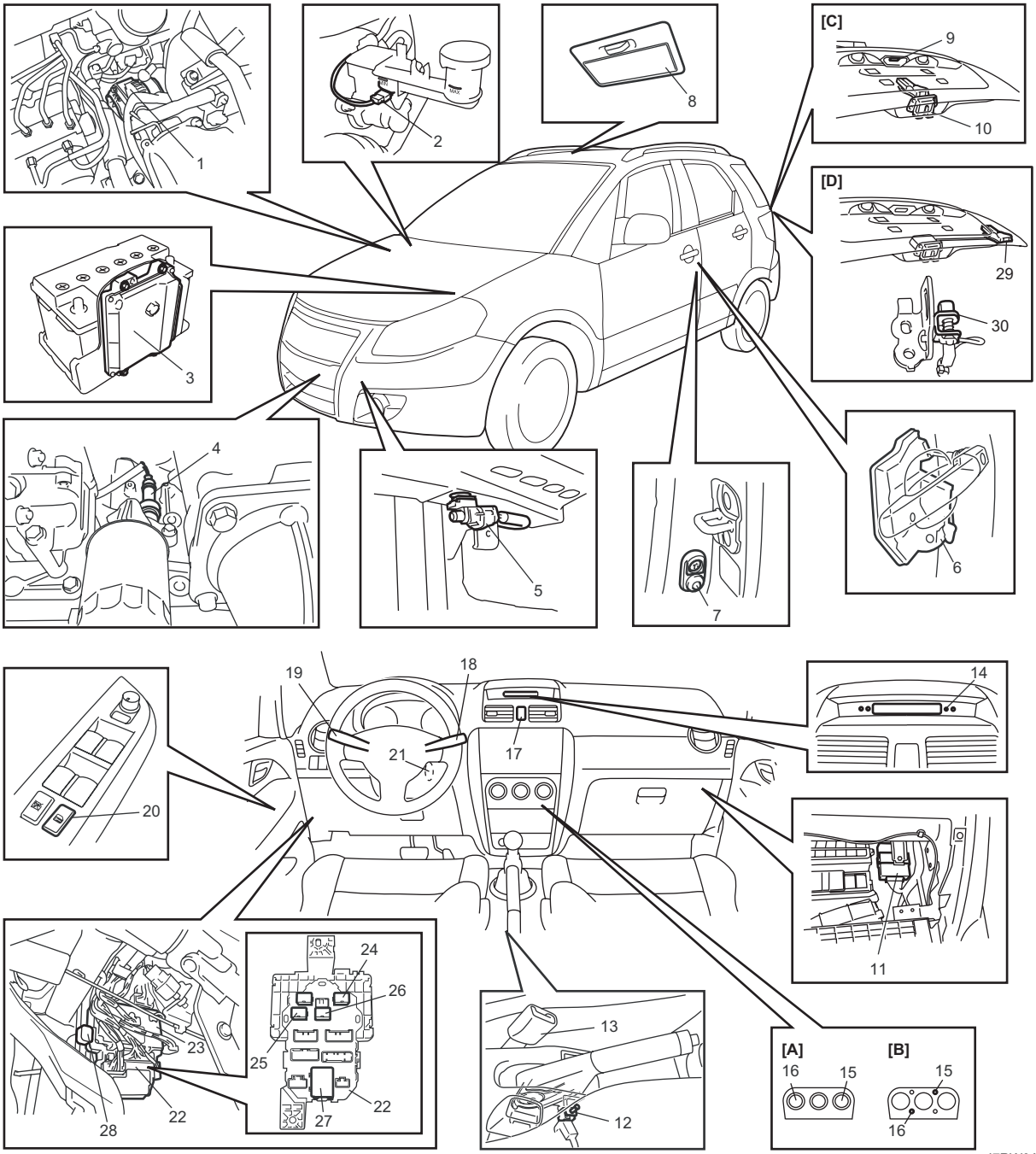

I7RW0AA20004-02

[A]: Auto A/C	9. Rear end door opener switch (if equipped)	21. Key reminder switch (included in ignition switch)
[B]: Manual A/C	10. Rear end door opener actuator (incorporated in door switch)	22. Junction block
[C]: Hatchback	11. Keyless entry receiver or keyless start control module (if equipped)	23. BCM
[D]: Sedan	12. Parking brake switch	24. Horn relay
1. Generator	13. Seat belt buckle switch	25. Rear wiper relay
2. Brake fluid level switch	14. Theft deterrent light	26. Rear end door window defogger relay (Hatchback)
3. ECM	15. Rear end door window / back window defogger switch	27. Turn signal and hazard warning relay (Hatchback)
4. Oil pressure switch	16. A/C switch (if equipped)	28. Back window defogger relay (Sedan)
5. Outside air temperature sensor (if equipped)	17. Hazard warning switch	29. Trunk lid opener actuator (keyless start model)
6. Door lock actuator (incorporated in key cylinder switch)	18. Rear wiper switch	30. Trunk lid switch (keyless start model)

7. Door switch	19. Lighting switch	
8. Interior light	20. Manual door lock switch (if equipped)	

Diagnostic Information and Procedures

BCM Self-Diagnosis Function

S7RW0AA204001

- BCM monitors conditions of the system components and its circuit with ignition switch turned to ON position. When an abnormality in the system occurs, the area where that abnormality lies is stored in the memory of EEPROM in BCM.
- DTC can be checked in either one of following ways.
  - DTC can be checked by SUZUKI scan tool (2) connected to DLC (1).
  - DTC can be read from flashing pattern of Theft deterrent light (3). Also, DTC is displayed on combination meter (4) at the same time.

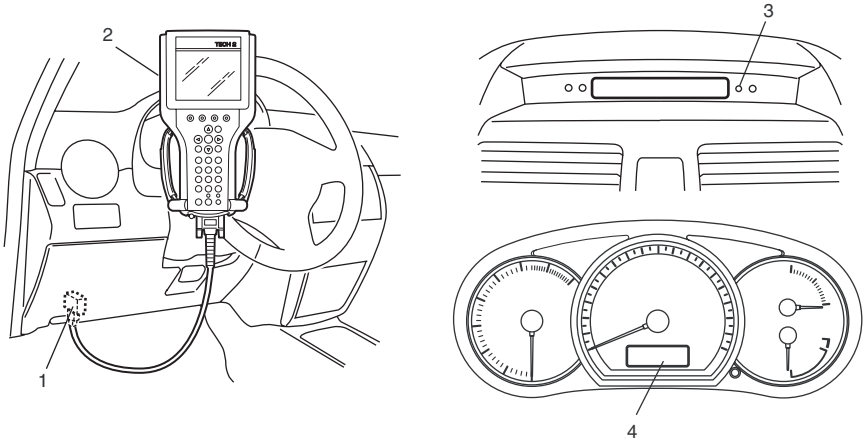

I5RW0AA20007-01

BCM Input / Output Table

Control	Input	Output
Power door lock system	• Key cylinder switch • Manual door lock switch	• Each door lock actuator
Keyless entry system	• Key reminder switch • Keyless entry receiver • Driver side door switch	• Each door lock actuator • Turn signal and hazard warning relay • Interior light
Keyless start system (Door lock function)	• Keyless start control module	• Each door lock actuator • Turn signal and hazard warning relay • Interior light
Keyless start system (Trunk lid opener function)	• Keyless start control module	• Trunk lid opener actuator
Rear wiper	• Rear wiper INT switch • Rear wiper LO switch	• Rear wiper relay
Combination meter	• Tail light switch • Oil pressure switch • Parking brake switch • Driver side seat belt switch • Brake fluid level switch • Generator • Each door switch	• Combination meter
Interior light	• Each door switch • Key reminder switch	• Interior light

Control	Input	Output
Warning buzzer	• Key reminder switch • Tail light switch • Driver side door switch • Keyless start control module (if equipped) • TCM (reverse signal) (if equipped)	• Warning buzzer (located in BCM)
Rear end door window / back window defogger	• Rear end door window / back window defogger switch • Generator	• Rear end door window / back window defogger relay
Rear end door opener	• Manual door lock switch (unlock signal) • Key cylinder switch (unlock signal) • Keyless entry transmitter (unlock signal) • Rear end door opener switch	• Rear end door opener relay
Door lock canceller	• SDM (air bag deployment signal)	• Each door lock actuator
Theft deterrent light	• Key reminder switch	• Theft deterrent light (located in information display or clock)

Body Electrical Control System Check

S7RW0AA204002

Step	Action	Yes	No
1	☞ **Customer complaint analysis** 1) Perform customer complaint analysis. *Was customer complaint analysis performed?*	Go to Step 2.	Perform customer complaint analysis.
2	☞ **Problem symptom confirmation** 1) Perform problem symptom confirmation. *Does trouble recur?*	Go to Step 3.	Go to Step 7.
3	☞ **DTC check** 1) Check DTC. *Is it malfunction code?*	Go to Step 4.	Go to Step 5.
4	☞ **Troubleshooting for DTC** 1) Check and repair according to DTC diag. flow. *Are check and repair completed?*	Go to Step 7.	Check and repair malfunction part(s).
5	☞ **Body electrical control system symptom diagnosis** 1) Perform check and repair referring to “Symptom Diagnosis” of system having a trouble. *Is there faulty condition?*	Repair or replace malfunction part(s).	Go to Step 6.
6	☞ **Check for intermittent problem** 1) Check for intermittent problem. *Is there faulty condition?*	Repair or replace malfunction part(s).	Go to Step 7.
7	☞ **Final confirmation test** 1) Clear DTC referring to “DTC Clearance”. 2) Check DTC referring to “DTC Check”. *Is there any DTC?*	Go to Step 4.	End.

Customer Complaint Analysis

Record details of the problem (failure, complaint) and how it occurred as described by the customer.
For this purpose, use of such a questionnaire form as shown in the figure will facilitate collecting information to the point required for proper analysis and diagnosis.

Customer questionnaire (example)

Customer's name:	Model:	VIN:	
Date of issue:	Date Reg:	Date of problem:	Mileage:

Problem Symptoms	・Power door lock system does not operate ・Keyless entry system does not operate ・Rear end door window defogger does not operate ・Rear wiper does not operate ・Rear end door opener does not operate ・Warning buzzer does not sound ・Interior light does not light ・Theft deterrent light does not flush ・Other_____
Frequency of Occurrence	・Continuous / Intermittent (times a day, a month) / Other_____
Environmental Condition	・Weather: Fine / Cloudy / Rain / Snow / Other_____ ・Temperature: ℃(°F)
Diagnostic Trouble Code	・Normal code / Malfunction code ( )

I5RS0DA20006-01

Problem Symptom Confirmation
Check if what the customer claimed in "Customer Questionnaire" is accurately found in the vehicle. If that symptom is found, check whether the symptom is identified as a failure. (This step should be shared with the customer if possible.)

DTC Check
Check DTC stored in BCM memory referring to "DTC Check", record it and then clear it referring to "DTC Clearance". DTC indicates malfunction that occurred in the system but does not indicate whether it exists now or it occurred in the past and the normal condition has been restored now. To check which case applies, clear DTC once and check whether or not any fault exists.

Troubleshooting for DTC
Based on the DTC indicated in Step 3 and referring to applicable DTC flow, locate the cause of the trouble, namely in a sensor, wire harness, connector, BCM or other part and repair or replace faulty parts.

Body Electrical Control System Symptom Diagnosis
Check the parts or system suspected as a possible cause referring to symptom diagnosis of each system.

Check for Intermittent Problem
Check parts where an intermittent trouble is easy to occur (e.g., wire harness, connector, etc.), referring to "Intermittent and Poor Connection Inspection in Section 00".

Final Confirmation Test
Confirm that the problem symptom has gone and the body electrical control system is free from any abnormal conditions. If what has been repaired is related to the malfunction DTC, check DTC again and confirm that no DTC is indicated.

Scan Tool Data

S7RW0AA204003

Scan tool data	Condition	Normal condition / reference value
Vehicle Speed ☞	At stop with ignition switch turned ON	0 km/h
Outside air Temp ☞	Reference value is relative to outside air temperature	–40 °C – 70 °C (–40 °F – 158 °F)
Battery Voltage ☞	At specified idle speed after warming up	10 – 14 V
Coolant Temp ☞	At specified idle speed after warming up	80 °C – 100 °C (176 °F – 212 °F)
Engine Speed ☞	Engine idling with no load applied after warming up	Desired idle speed ± 50 rpm
Fuel Consumption ☞	At specified idle speed after warming up	0.0 km/l
Key Reminder Sw ☞	Ignition key inserted in ignition key cylinder	Key in
	Ignition key pulled out from ignition key cylinder	Pulled
Rear Wiper Sw ☞	Rear wiper switch at ON position and ignition switch turned ON	ON
	Rear wiper switch at INT position and ignition switch turned ON	INT
	Rear wiper switch at OFF position and ignition switch turned ON	OFF
Door key Sw ☞	Key cylinder switch of driver side door at lock position	LOCK
	Key cylinder switch of driver side door not turned	Neutral
	Key cylinder switch of driver side door at unlock position	Unlock
Door Lock Sw ☞	Lock side of manual door lock switch pressed	LOCK
	Manual door lock switch not pressed	Neutral
	Unlock side of manual door lock switch pressed	Unlock
Driv Door Sw ☞	Driver side door open	Open
	Driver side door closed	Close
Pass Door Sw ☞	Doors other than driver side door open	Open
	Doors other than driver side door closed	Close
Brake Fluid Level ☞	Brake fluid level at MIN level or higher	Normal
	Brake fluid level lower than MIN level	Low
Parking Brake Sw ☞	Parking brake lever pulled	ON
	Parking brake lever released	OFF
Rear Defogger Sw ☞	Rear end door window / back window defogger switch pressed with engine running	ON
	Rear end door window / back window defogger switch not pressed with engine running	OFF
Headlight Sw ☞	Lighting switch at HEAD position	ON
	Lighting switch at OFF position	OFF
Tail Light Sw ☞	Lighting switch at HEAD or CLEARANCE position	ON
	Lighting switch at OFF position	OFF
Front Fog Light Sw ☞	Lighting switch at HEAD position and front fog light switch at ON position	ON
	Lighting switch at HEAD position and front fog light switch at OFF position	OFF
Driv Seat belt Sw ☞	Driver side seat belt fastened	Fasten
	Driver side seat belt unfastened	Unfasten
Rear end door opener ☞	Rear end door opener switch pressed	ON
	Rear end door opener switch not pressed	OFF
Trunk Sw ☞	Trunk lid opened	ON
	Trunk lid closed	OFF
Charge light ☞	Engine at stop with ignition switch turned ON	ON
	Engine running	OFF
Oil pressure switch ☞	Engine at stop with ignition switch turned ON	ON
	Engine running	OFF
A/C Switch ☞	A/C and ignition switch turned ON	ON
	A/C switch turned OFF	OFF

Scan Tool Data Definitions

Vehicle Speed (km/h, mph): This parameter indicates the vehicle speed computed by ECM.
Outside air Temp (°C, °F): It is detected by outside air temperature sensor.
Battery Voltage (V): This parameter indicates battery positive voltage inputted to BCM.
Coolant Temp (Engine coolant temperature) (°C, °F): It is detected by engine coolant temperature sensor.
Engine Speed (RPM): It is computed by reference pulse signals from CMP sensor.
Fuel Consumption (km/l): This parameter indicates the fuel consumption computed by ECM.
Key Reminder Sw (Key reminder switch) (Pulled / Key in): This parameter indicates the state of the key reminder switch.
Rear Wiper Sw (Rear wiper switch) (ON / INT / OFF): This parameter indicates the state of the rear wiper switch.
Door key Sw (Door key cylinder switch) (Lock / Neutral / Unlock): This parameter indicates the state of the door key cylinder switch.
Door Lock Sw (Manual door lock switch) (Lock / Neutral / Unlock): This parameter indicates the state of the manual door lock switch.
Driv Door Sw (Driver side door switch) (Open / Close): This parameter indicates the state of the driver side door switch.
Pass Door Sw (Other than driver side door switch) (Open / Close): This parameter indicates the state of the door switches other than driver side door switch.
Brake Fluid Level (Low / Normal): Low: Brake fluid level is lower than specified level.
Normal: Brake fluid level is higher than MIN level.
Parking Brake Sw (Parking brake switch) (ON / OFF): ON: Parking brake lever is pulled up.
OFF: Parking lever is released.
Rear Defogger Sw (Rear end door window / back window defogger switch) (ON / OFF): This parameter indicates the state of the rear end door window / back window defogger switch.
Headlight Sw (Headlight switch) (ON / OFF) (Junction block without BCM type): This parameter indicates the state of the lighting switch.
Tail Light Sw (Lighting switch) (ON / OFF): This parameter indicates the state of the lighting switch.
Front Fog Light Sw (Front fog light switch) (ON / OFF) (Junction block without BCM type): This parameter indicates the state of the front fog light switch.
Driv Seatbelt Sw (Driver seat belt switch) (Fasten / Unfasten): This parameter indicates the state of the driver side seat belt buckle switch.
Rear end door opener (Rear end door opener switch) (ON / OFF): This parameter indicates the state of the rear end door opener switch.
Trunk Sw (Trunk lid switch) (ON / OFF) (keyless start model): This parameter indicates the state of the trunk lid switch.
Charge light (ON / OFF): This parameter indicates the state of the charge system monitor switch.
Oil pressure switch (ON / OFF): This parameter indicates the state of the oil pressure switch.
A/C Switch (ON / OFF): This parameter indicates the state of the air conditioning switch.

Diagnosis Using Output Test Function of SUZUKI Scan Tool

SUZUKI scan tool has the output test function which can force operation of following actuators and relays of the system controlled by BCM. When a malfunction is found in the system controlled by BCM, execute the output test which enables easy judgment whether the malfunction is on the input side or output side of BCM. For detailed information on operation of SUZUKI scan tool, refer to “SUZUKI Scan Tool Operator’s Manual”.

Output Test Item	Controlled Parts
Hazard Warning Light	Turn signal and hazard warning relay
Interior (Dome) Light	Interior (Dome) light (when interior light switch is at DOOR position)
Tail Light*1	Tail light relay
Front Fog Light*1	Front fog light relay (when lighting switch is at HEAD position)
Rear defogger	Rear end door window / back window defogger relay
Dead lock	Each door lock actuator
Rear end door (trunk) open	Rear end door / trunk lid opener relay
Door	Each door lock actuator
Warning Buzzer	Warning buzzer (in BCM)
Rear wiper	Rear wiper relay
Alarm indicator	Theft deterrent light (in information display or clock)
Horn*2	Horn relay

NOTE

***1: Junction block without BCM type**
***2: With security alarm system**

DTC Table

S7RW0AA204004

DTC (displayed on SUZUKI scan tool)	DTC (indicated by theft deterrent light)	DTC (displayed on odometer in combination meter)	Detected item	Detecting condition
NO DTC	0000	0000	—	No DTC detected
☞ B1133	1133	b1133	Battery voltage too high	Battery voltage too high
☞ B1141	1141	b1141	Outside air temperature (ambient temperature) sensor circuit open	Sensor output voltage too high
☞ B1142	1142	b1142	Outside air temperature (ambient temperature) sensor circuit short to ground	Sensor output voltage too low
☞ B1150	1150	b1150	Air bag communication circuit malfunction	Air bag communication circuit open or short to ground
☞ B1157	1157	b1157	Air bag deployment signal input	Air bag deployment signal inputted
☞ B1170	1170	b1170	EEPROM access error	Memory error
☞ U0073	0073	U0073	Control module communication bus off	Transmitting and receiving error of BCM for specified time continuously
☞ U0100	0100	U0100	Lost communication with ECM	Receiving error of BCM from ECM for specified time continuously
☞ U0101	0101	U0101	Lost communication with TCM	Receiving error of BCM from TCM for specified time continuously
☞ U0155	0155	U0155	Lost communication with instrument panel cluster (IPC) control module	Receiving error of BCM from combination meter for specified time continuously
☞ U1144	1144	U1144	Lost communication with keyless start control module	Receiving error of BCM from keyless start control module for specified time continuously

DTC Check

S7RW0AA204005

Using SUZUKI Scan Tool

1) Prepare SUZUKI scan tool.
2) With ignition switch turned OFF, connect it to data link connector (DLC) located on underside of instrument panel of driver's side.

   Special tool
   (A): SUZUKI scan tool

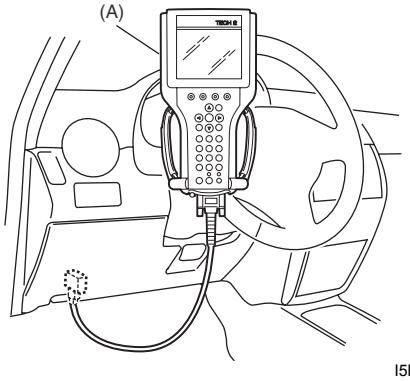

I5RW0AA20008-02

3) Turn ignition switch ON.
4) Read DTC according to instructions displayed on SUZUKI scan tool and print it or write it down.
   Refer to SUZUKI scan tool operator's manual for further details.
   If communication between SUZUKI scan tool and BCM is not possible, check if SUZUKI scan tool is communicable by connecting it to BCM in another vehicle. If communication is possible in this case, SUZUKI scan tool is in good condition. Then check data link connector and serial data line (circuit) in the vehicle with which communication was not possible.
5) After completing the check, turn ignition switch off and disconnect SUZUKI scan tool from data link connector.

Without Using SUZUKI Scan Tool

1) Turn ignition switch to OFF position.
2) Perform following Steps a) to d) within 10 seconds after ignition switch is turned ON and engine stops.
   a) Turn headlight switch to "SMALL" position.
   b) Turn headlight switch to "OFF" position.
   c) Repeat Steps a) and b) 2 times.
   d) Press and release driver side door switch 3 times.

3) Check DTC displayed on odometer of combination meter or read flashing pattern of theft deterrent light which represents DTC as shown in the following example and write it down.
When more than 2 DTCs are stored in memory, flashing for each DTC starts with the smallest DTC number in increasing order. Also, DTC is indicated repeatedly until the ignition switch is turned OFF.

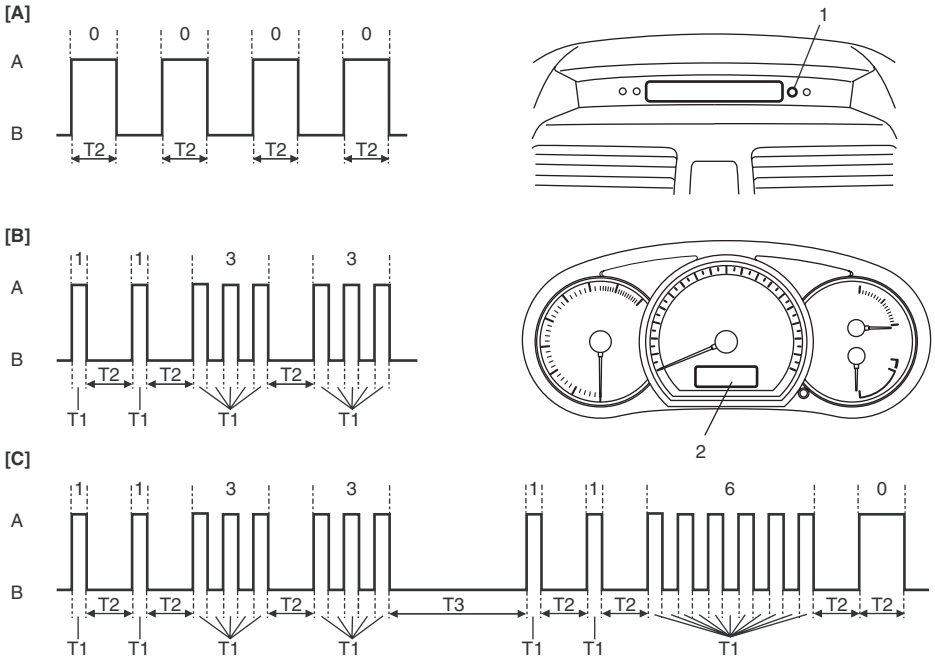

I5RW0AA20009-01

[A]: No DTC (No. 0000)	A: Indicator lamp turned ON	T2: 1.0 seconds	2. Odometer
[B]: DTC B1133 (No. 1133)	B: Indicator lamp turned OFF	T3: 3.0 seconds	
[C]: When 2 DTCs are detected	T1: 0.3 seconds	1. Theft deterrent light	

4) After completing the check, turn ignition switch to OFF position.

DTC Clearance

S7RW0AA204006

After repair or replace of malfunction part(s), clear all DTCs by performing the following procedure.

Using SUZUKI Scan Tool

1) Connect SUZUKI scan tool to data link connector in the same manner as when making this connection for DTC check.
2) Turn ignition switch ON and engine stops.
3) Erase DTC according to instructions displayed on scan tool. Refer to scan tool operator's manual for further details.
4) After completing the clearance, turn ignition switch off and disconnect scan tool from data link connector.

Without Using SUZUKI Scan Tool

1) Turn ignition switch to OFF position.
2) Perform following Steps a) to d) within 10 seconds after ignition switch is turned ON and engine stops.
   a) Turn headlight switch to "SMALL" position.
   b) Turn headlight switch to "OFF" position.
   c) Repeat Steps a) and b) 3 times.
   d) Press and release driver side door switch 4 times.
3) After completing above Steps, confirm that no malfunction DTC is detected.

BCM Power Circuit and Ground Circuit Check

S7RW0AA204007

Wiring Diagram

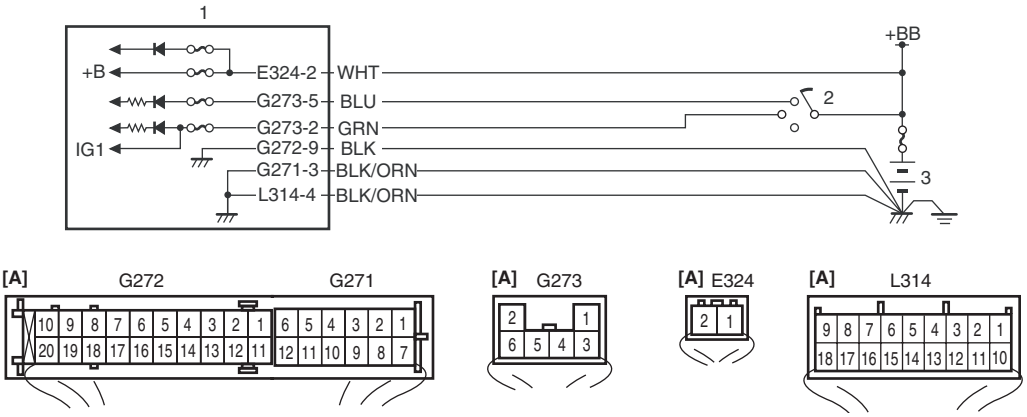

I6RW0CA20006-02

[A]: Junction block connector viewed from harness side	2. Ignition switch
1. Junction block	3. Battery

Troubleshooting

Step	Action	Yes	No
1	**Fuse check** 1) Turn ignition switch to OFF position. 2) Check circuit fuses for condition. *Are circuit fuses in good condition?*	Go to Step 2.	Replace fuse and check for short circuit to ground.
2	**Power supply circuit check** 1) Disconnect connectors from junction block. 2) Check for proper connection to junction block connector at terminal “E324-2”. 3) If OK, then measure voltage between “E324-2” terminal of junction block connector and vehicle body ground. *Is voltage 10 – 14 V?*	Go to Step 3.	Repair power supply circuit.
3	**Power supply circuit check** 1) Check for proper connection to junction block connector at terminals “G273-2” and “G273-5”. 2) If OK, turn ignition switch to ON position. 3) Measure voltage between following terminals. • Between “G273-2” terminal of junction block connector and vehicle body ground • Between “G273-5” terminal of junction block connector and vehicle body ground *Is each voltage 10 – 14 V?*	Go to Step 4.	Repair power supply circuit.

Step	Action	Yes	No
4	**Ground circuit check** 1) Turn ignition switch to OFF position. 2) Check for proper connection to junction block connector at terminals “G271-3”, “G272-9” and “L314-4”. 3) If OK, then measure resistance between following terminals. • Between “G271-3” terminal of junction block connector and vehicle body ground • Between “G272-9” terminal of junction block connector and vehicle body ground • Between “L314-4” terminal of junction block connector and vehicle body ground *Is each resistance 2 Ω or less?*	BCM power supply circuit and ground circuit are in good condition.	Repair ground circuit.

DTC B1133 (No. 1133): Battery Voltage Too High

S7RW0AA204008

Wiring Diagram

Refer to “BCM Power Circuit and Ground Circuit Check”.

DTC Detecting Condition and Possible Cause

DTC detecting condition	Possible cause
Power voltage supplied from battery to BCM is higher than 16 V.	• Charging system malfunction • BCM malfunction

Flow Test Description

Step 1: Check charging system

DTC Troubleshooting

Step	Action	Yes	No
1	**Charging system operation check** 1) Check generator for operation referring to “Generator Test (Overcharged Battery Check) in Section 1J”. *Is it in good condition?*	Substitute a known good BCM (included in junction block) and recheck.	Repair charging system.

DTC B1141 / B1142 (No. 1141 / No. 1142): Outside Air Temperature (Ambient Temp.) Sensor Circuit Malfunction

S7RW0AA204009

Wiring Diagram

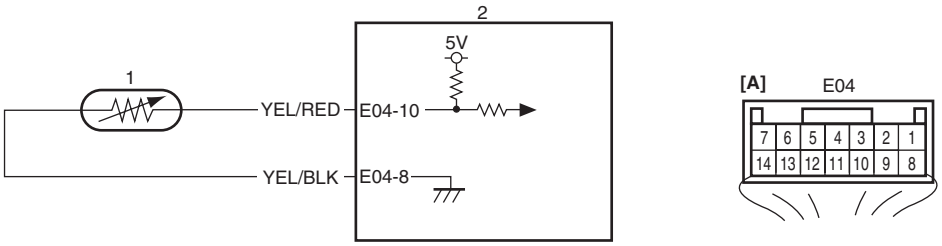

I6RW0CA20007-01

[A]: BCM connector viewed from harness side	2. BCM
1. Outside air temperature sensor	

DTC Detecting Condition and Possible Cause

DTC detecting condition	Possible cause
DTC B1141 (DTC No. 1141): Input signal from outside air temperature sensor is higher than 4.88 V.	• Open in outside air temperature sensor circuit • Outside air temperature sensor malfunction • BCM malfunction
DTC B1142 (DTC No. 1142): Input signal from outside air temperature sensor is lower than 0.1 V.	• Short in outside air temperature sensor circuit • Outside air temperature sensor malfunction • BCM malfunction

Flow Test Description

Step 1: Check whether malfunction is in outside air temperature sensor.
Step 2: Check outside air temperature sensor circuit.

DTC Troubleshooting

Step	Action	Yes	No
1	**Outside air temperature sensor check** 1) Turn ignition switch to OFF position. 2) Disconnect connector from outside air temperature sensor. 3) Check outside air temperature sensor for resistance referring to “Outside Air Temperature Sensor Inspection (If Equipped) in Section 9C”. *Is it in good condition?*	Go to Step 2.	Replace outside air temperature sensor.
2	**Outside air temperature sensor circuit check** 1) Disconnect connector from BCM and check for proper terminal connection to BCM connector. 2) If connections are OK, check outside air temperature sensor circuit for open, short and high resistance. *Is each circuit in good condition?*	Substitute a known-good BCM (included in junction block) and recheck.	Repair circuit.

DTC B1150 (No. 1150): Air Bag Communication Circuit Malfunction

S7RW0AA204010

Wiring Diagram

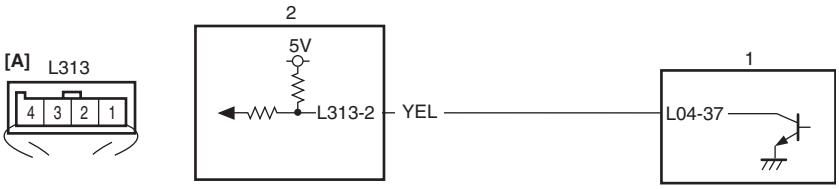

I6RW0CA20008-01

[A]: Junction block connector viewed from harness side	2. BCM
1. SDM	

DTC Detecting Condition and Possible Cause

DTC detecting condition	Possible cause
After ignition switch is turned ON, abnormal signal is fed from SDM to BCM.	• Air bag communication circuit open or short • SDM malfunction • BCM malfunction

Flow Test Description
Step 1: Check air bag communication circuit.
Step 2: Check air bag communication circuit.

DTC Troubleshooting

Step	Action	Yes	No
1	**Air bag communication circuit check** 1) Turn ignition switch to OFF position. 2) Disconnect connectors from junction block and SDM. 3) Check for proper terminal connection to BCM and SDM connectors. 4) If connections are OK, check air bag communication circuit for open, short and high resistance. *Is circuit in good condition?*	Go to Step 2.	Repair circuit.
2	**Air bag communication circuit check** 1) Turn ignition switch to OFF position. 2) Connect connectors to junction block. 3) Turn ignition switch to ON position. 4) Measure voltage between “L313-2” terminal of junction block connector and vehicle body ground. *Is voltage 4 – 6 V?*	Substitute a known-good SDM and recheck.	Substitute a known-good BCM (included in junction block) and recheck.

DTC B1157 (No. 1157): Air Bag Deployment Signal Input

S7RW0AA204011

Wiring Diagram

Refer to “DTC B1150 (No. 1150): Air Bag Communication Circuit Malfunction”.

DTC Detecting Condition and Possible Cause

DTC detecting condition	Possible cause
Air bag deployment signal is fed from SDM to BCM.	• Air bag component parts • BCM malfunction

Flow Test Description

Step 1: Check DTC for SDM.

DTC Troubleshooting

Step	Action	Yes	No
1	**DTC check of SDM** 1) Check DTC stored in SDM referring to “DTC Check in Section 8B”. *Is DTC B1021 detected?*	Go to “DTC B1021: Front Air Bag Deployment Record in Section 8B”.	Substitute a known-good BCM (included in junction block) and recheck.

DTC B1170 (No. 1170): EEPROM Access Error

S7RW0AA204012

DTC Detecting Condition and Possible Cause

DTC detecting condition	Possible cause
Data write error or check sum error.	BCM malfunction

DTC Troubleshooting

NOTE

Before performing steps below, be sure to perform “Body Electrical Control System Check”.

1) Ignition switch OFF.
2) Replace BCM.
3) Repeat BCM Check Flow Table.

DTC U0073 (No. 0073): Control Module Communication Bus Off

S7RW0AA204013

Refer to “Troubleshooting for CAN-DTC in Section 1A”.

DTC U0100 (No. 0100): Lost Communication with ECM

S7RW0AA204014

Refer to “Troubleshooting for CAN-DTC in Section 1A”.

DTC U0101 (No. 0101): Lost Communication with TCM

S7RW0AA204015

Refer to “Troubleshooting for CAN-DTC in Section 1A”.

DTC U0155 (No. 0155): Lost Communication with Instrument Panel Cluster (IPC) Control Module

S7RW0AA204016

Refer to “Troubleshooting for CAN-DTC in Section 1A”.

DTC U1144 (No. 1144): Lost Communication with Keyless Start Control Module

S7RW0AA204017

Refer to “Troubleshooting for CAN-DTC in Section 1A”.

Inspection of BCM and Its Circuits

S7RW0AA204018

BCM and its circuits can be checked at BCM wiring couplers by measuring voltage and resistance.

⚠ CAUTION

BCM cannot be checked by itself. It is strictly prohibited to connect voltmeter or ohmmeter to BCM with couplers disconnected from it.

Voltage Check

1) Disconnect negative cable (–) at battery.
2) Remove BCM (included in junction block) referring to “BCM (Included in Junction Block) Removal and Installation”.
3) Connect connectors to BCM (1) and junction block (2).
4) Check voltage at each terminal number of couplers connected.
   For connector and terminal number, refer to “Connector Layout Diagram of BCM and Junction Block”.

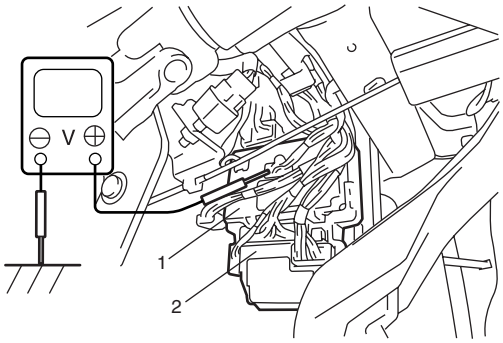

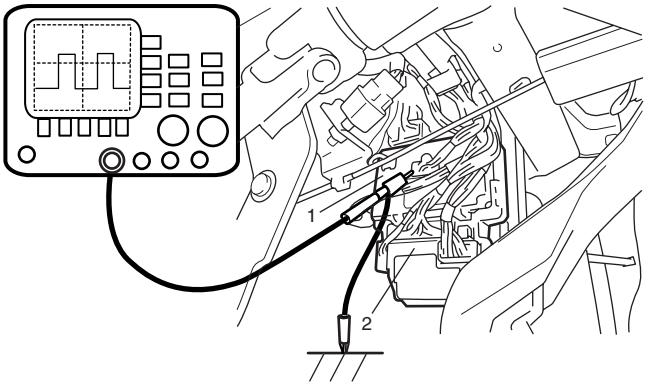

I4RS0AA20030-01

NOTE

- **As each terminal voltage is affected by the battery voltage, confirm that it is 11 V or more when ignition switch is ON.**
- **Voltage with asterisk (*) can not be measured by voltmeter because it is pulse signal. Check it with oscilloscope if necessary.**

BCM connector “L01”

Terminal	Circuit	Normal voltage	Condition
L01-1	Passenger side door lock actuator control (Unlock) (if equipped)	10 – 14 V	Unlock signal is output for passenger side door lock actuator
		0 V	Unlock signal is not output for passenger side door lock actuator
L01-2	—	—	—
L01-3	Rear end door switch (hatchback)	10 – 14 V	Rear end door is closed
		0 V	Rear end door is opened
	Trunk lid switch (sedan) (keyless start model)	10 – 14 V	Trunk lid is closed
		0 V	Trunk lid is opened
L01-4	Rear end door opener switch (if equipped)	10 – 14 V	Rear end door opener switch is not pushed
		0 V	Rear end door opener switch is pushed
L01-5	Manual door lock switch (Unlock) (if equipped)	10 – 14 V	Manual door lock switch is at any position other than unlock position
		0 V	Manual door lock switch is at unlock position
L01-6	Parking brake switch	*0 – 3 V ↑↓ 10 – 14 V	Refer to “Reference waveform No. 1: ”
		0 V	Ignition switch is at ON position and parking brake lever is pulled up
L01-7	Driver side door switch	10 – 14 V	Driver side door is closed
		0 V	Driver side door is opened

Terminal	Circuit	Normal voltage	Condition
L01-8	—	—	—
L01-9	—	—	—
L01-10	Driver side door lock actuator control (Unlock) (if equipped)	10 – 14 V	Unlock signal is output for driver side door lock actuator
		0 V	Unlock signal is not output for driver side door lock actuator
L01-11	Rear end door / trunk lid opener actuator control (if equipped)	0 V	Rear end door actuator motor is not in operation
		10 – 14 V	Rear end door actuator motor is in operation
L01-12	Manual door lock switch (Lock) (if equipped)	10 – 14 V	Manual door lock switch is at any position other than lock position
		0 V	Manual door lock switch is at lock position
L01-13	—	—	—
L01-14	Driver side seat belt switch	*0 – 3 V ↑↓ 10 – 14 V	Refer to “Reference waveform No. 2: ”
		0 V	Ignition switch is at ON position and driver side seat belt is unfastened
L01-15	Door switch (other than driver side door and rear end door)	10 – 14 V	Rear right and left side door and passenger side door are closed
		0 V	Any one of the door is opened (except driver side door and rear end door)
L01-16	Driver side door key cylinder switch (Lock) (if equipped)	10 – 14 V	Driver side door key cylinder switch is at any position other than lock position
		0 V	Driver side door key cylinder switch is at lock position
L01-17	Driver side door key cylinder switch (Unlock) (if equipped)	10 – 14 V	Driver side door key cylinder switch is at any position other than unlock position
		0 V	Driver side door key cylinder switch is at unlock position
L01-18	—	—	—

BCM connector “E04”

Terminal	Circuit	Normal voltage	Condition
E04-1	CAN communication line (high) for ABS / ESP® control module	*2.5 – 3.6 V	Refer to “Reference waveform No. 3: ”
E04-2	CAN communication line (low) for ABS / ESP® control module	*1.6 – 2.5 V	
E04-3	—	—	—
E04-4	Generator “L” terminal	10 – 14 V	Engine is running
		0 V	Ignition switch is at ON position
E04-5	Brake fluid level switch	*0 – 3 V ↑↓ 10 – 14 V	Refer to “Reference waveform No. 1: ”
		0 V	Ignition switch is at ON position, parking brake lever is released and brake fluid level is lower than MIN level
E04-6	—	—	—
E04-7	—	—	—
E04-8	Sensor ground for outside air temperature sensor (if equipped)	0 V	—
E04-9	Serial communication line of data link connector for ABS control module	7 – 12 V	Ignition switch is at ON position
E04-10	Outside air temperature sensor (if equipped)	About 1.5 V	Ignition switch is at ON position and outside air temperature approx. 20 °C (68 °F)

Terminal	Circuit	Normal voltage	Condition
E04-11	Oil pressure switch	*3 – 14 V	Refer to “Reference waveform No. 4: ”
		0 V	Ignition switch is at ON position and engine is at stop
E04-12	—	—	—
E04-13	—	—	—
E04-14	—	—	—

BCM connector “G04”

Terminal	Circuit	Normal voltage	Condition
G04-1	CAN communication line (low) for DLC	*1.6 – 2.5 V	Refer to “Reference waveform No. 3: ”
G04-2	CAN communication line (low) for each control module	*1.6 – 2.5 V	
G04-3	CAN communication line (high) for DLC	*2.5 – 3.6 V	
G04-4	CAN communication line (high) for each control module	*2.5 – 3.6 V	
G04-5	Serial communication line of data link connector	7 – 12 V	Ignition switch is at ON position
G04-6	—	—	—
G04-7	—	—	—
G04-8	Theft deterrent light	10 – 14 V	Theft deterrent light is not lit up
		0 V	Theft deterrent light is lit up
G04-9	—	—	—
G04-10	—	—	—
G04-11	Serial communication line for information display and HVAC control module (if equipped)	*0 – 1 V ↑↓ 10 – 14 V	Refer to “Reference waveform No. 5: ”
G04-12	Ground for keyless entry receiver (if equipped)	0 V	—
G04-13	Power supply for keyless entry receiver (if equipped)	4 – 6 V	Ignition switch is at all positions
G04-14	Signal for keyless entry receiver (if equipped)	*0 – 1 V ↑↓ 4 – 6 V	Refer to “Reference waveform No. 6: ”
G04-15	Vehicle speed signal output	*0 – 1 V ↑↓ 4 – 6 V	Refer to “Reference waveform No. 7: ”
G04-16	Key reminder switch	10 – 14 V	Ignition key is inserted to ignition key cylinder
		0 V	Ignition key is pulled out from ignition key cylinder
G04-17	Rear end door window / back window defogger switch	*3 – 14 V	Refer to “Reference waveform No. 8: ”
		0 V	Ignition switch is at ON position and rear end door window / back window defogger switch is pushed
G04-18	A/C switch (if equipped)	*3 – 14 V	Refer to “Reference waveform No. 8: ”
		0 V	Ignition switch is at ON position, blower speed selector is at any position other than OFF position and A/C switch is at ON position
G04-19	—	—	—
G04-20	—	—	—
G04-21	Rear wiper INT switch	*0 – 1 V ↑↓ 10 – 14 V	Refer to “Reference waveform No. 9: ”
		0 V	Ignition switch is at ON position and rear wiper switch is at INT position

Terminal	Circuit	Normal voltage	Condition
G04-22	Rear wiper low switch	*0 – 1 V ↑↓ 10 – 14 V	Refer to “Reference waveform No. 9: ”
		0 V	Ignition switch is at ON position and rear wiper switch is at LOW position

Junction block connector “E324”

Terminal	Circuit	Normal voltage	Condition
E324-2	Backup power source	10 – 14 V	Ignition switch is at all positions

Junction block connector “E325”

Terminal	Circuit	Normal voltage	Condition
E325-3	Horn	10 – 14 V	Horn switch is at ON position
		0 V	Horn switch is at OFF position

Junction block connector “G271”

Terminal	Circuit	Normal voltage	Condition
G271-3	Ground for BCM	0 V	Ignition switch is at all positions
G271-7	Rear end door window defogger indicator light (Hatchback)	10 – 14 V	Engine is running and rear end door window defogger indicator light is lit up
		0 V	Engine is running and rear end door window defogger indicator light is not lit up

Junction block connector “G272”

Terminal	Circuit	Normal voltage	Condition
G272-3	Horn switch	10 – 14 V	Horn switch is not pushed
		0 V	Horn switch is pushed
G272-7	Lighting switch	10 – 14 V	Engine is running (with DRL model) or lighting switch is at any position other than OFF position
		0 V	Lighting switch is at OFF position
G272-9	Ground for BCM	0 V	Ignition switch is at all positions
G272-11	Hazard warning switch	10 – 14 V	Hazard warning switch is at OFF position
		0 V	Hazard warning switch is at ON position or lock or unlock button of keyless entry transmitter (answer back control) is pushed

Junction block connector “G273”

Terminal	Circuit	Normal voltage	Condition
G273-2	Power source (IG)	10 – 14 V	Ignition switch is at ON position
		0 V	Ignition switch is at any position other than ON position
G273-5	Power source (ACC)	10 – 14 V	Ignition switch is at ACC or ON position
		0 V	Ignition switch is at any position other than ACC or ON position

Junction block connector “L312”

Terminal	Circuit	Normal voltage	Condition
L312-4	Power supply for rear wiper motor	10 – 14 V	Ignition switch is at ON position
L312-5	Interior light	10 – 14 V	Interior light switch is at DOOR position and interior light is not lit up
		0 V	Interior light switch is at DOOR position and interior light is lit up

Junction block connector "L313"

Terminal	Circuit	Normal voltage	Condition
L313-2	Air bag communication line	*0 – 1 V ↑↓ 4 – 6 V	Refer to "Reference waveform No. 10: "
L313-3	Serial communication line of data link connector for SDM	7 – 12 V	Ignition switch is at ON position

Junction block connector "L314"

Terminal	Circuit	Normal voltage	Condition
L314-4	Ground for BCM	0 V	Ignition switch is at all positions
L314-6	Right side door mirror heater (if equipped)	10 – 14 V	Engine is running and rear end door window / back window defogger is in operation
		0 V	Engine is running and rear end door window / back window defogger is not in operation
L314-7	Left side door mirror heater (if equipped)	10 – 14 V	Engine is running and rear end door window / back window defogger is in operation
		0 V	Engine is running and rear end door window / back window defogger is not in operation
L314-8	Rear end door window defogger wire (Hatchback)	10 – 14 V	Engine is running and rear end door window defogger is in operation
		0 V	Engine is running and rear end door window defogger is not in operation
L314-9	Rear wiper control	10 – 14 V	Ignition switch is at ON position and rear wiper is not in operation
		0 V	Ignition switch is at ON position and rear wiper is in operation

Junction block connector "L315"

Terminal	Circuit	Normal voltage	Condition
L315-1	Door lock actuator control (Dead lock) (if equipped)	10 – 14 V	Driver side key cylinder is turned to lock twice with in 3 seconds
		0 V	Manual door lock switch is at any position other than LOCK position and driver side door key cylinder switch is at any position other than LOCK position
L315-5	Back window defogger control (Sedan)	10 – 14 V	Engine is running and back window defogger is not in operation
		0 V	Engine is running and back window defogger is in operation
L315-9	Door lock actuator control (Unlock) (if equipped)	10 – 14 V	Unlock signal is output for rear door lock actuator
		0 V	Unlock signal is not output for rear door lock actuator
L315-10	Door lock actuator control (Lock) (if equipped)	10 – 14 V	Lock signal is output for all door lock actuators
		0 V	Lock signal is not output for all door lock actuators

Reference waveform No. 1

Parking brake or brake fluid level switch signal (1)

Measurement terminal	Parking brake switch CH2: “L01-6” to “G271-3” Brake fluid level switch CH2: “E04-5” to “G271-3”
Oscilloscope setting	CH1: 5 V / DIV TIME: 10 ms / DIV
Measurement condition	Parking brake switch: • Ignition switch is at ON position, parking brake lever is released Brake fluid level switch • Ignition switch is at ON position, brake fluid level is in normal

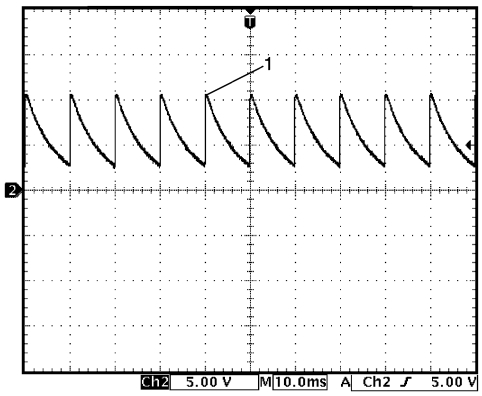

I4RS0AA20018-02

Reference waveform No. 2

Driver seat belt switch signal (1)

Measurement terminal	CH2: “L01-14” to “G271-3”
Oscilloscope setting	CH2: 5 V/DIV TIME: 4 ms/DIV
Measurement condition	Ignition switch is at ON position and driver side seat belt is fastened

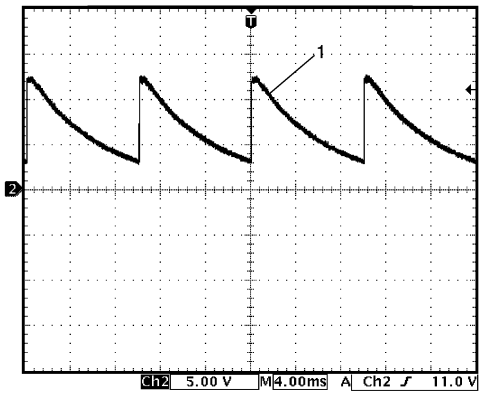

I4RS0AA20016-02

Reference waveform No. 3

CAN communication signal

Measurement terminal	CAN communication signal for ABS control module CH2: “E04-1” to “G271-3” CH3: “E04-2” to “G271-3” CAN communication signal for DLC CH2: “G04-3” to “G271-3” CH3: “G04-1” to “G271-3” CAN communication signal for each control module CH2: “G04-4” to “G271-3” CH3: “G04-2” to “G271-3”
Oscilloscope setting	CH2: 1 V/DIV CH3: 1 V/DIV TIME: 40 μs/ DIV
Measurement condition	Ignition switch is at ON position

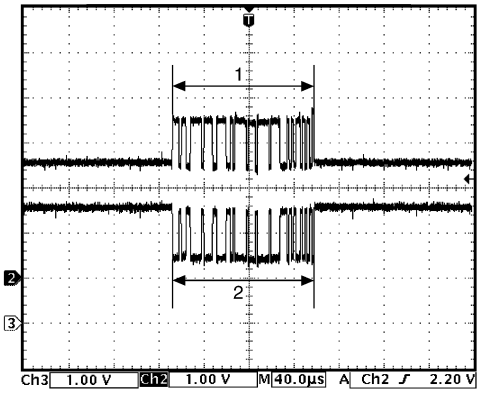

I4RS0AA20017-02

1.	CAN communication line signal (High)
2.	CAN communication line signal (Low)

Reference waveform No. 4

Oil pressure switch signal (1)

Measurement terminal	CH2: “E04-11” to “G271-3”
Oscilloscope setting	CH2: 5 V / DIV TIME: 10 ms / DIV
Measurement condition	Engine is running and oil pressure is in normal condition

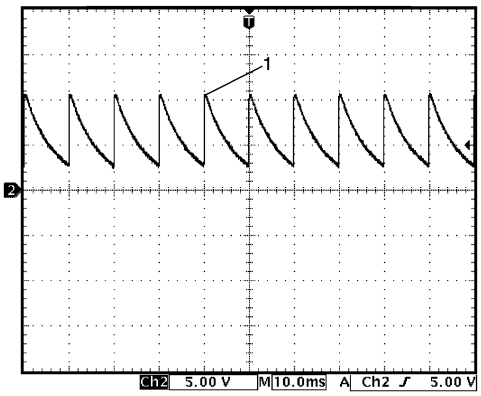

I4RS0AA20018-02

Reference waveform No. 5
Information display and HVAC control module serial communication signal (1)

Measurement terminal	CH2: “G04-11” to “G271-3”
Oscilloscope setting	CH2: 5 V / DIV TIME: 2 ms / DIV
Measurement condition	Ignition switch is at ON position

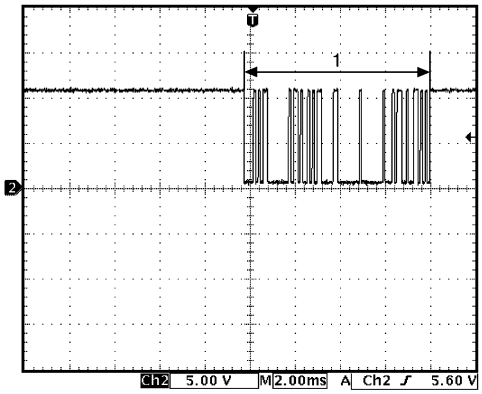

I4RS0AA20021-02

Reference waveform No. 6
Keyless entry receiver signal (1)

Measurement terminal	CH2: “G04-14” to “G271-3”
Oscilloscope setting	CH2: 2 V / DIV TIME: 200 ms / DIV
Measurement condition	Lock or unlock button of keyless entry transmitter is pushed

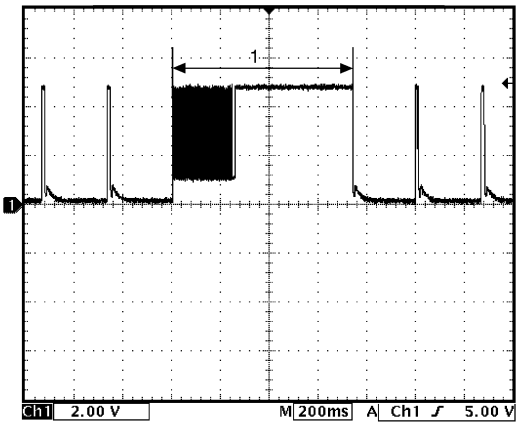

I4RS0AA20022-02

Reference waveform No. 7
Vehicle speed pulse output signal (1)

Measurement terminal	CH1: “G04-15” to “G271-3”
Oscilloscope setting	CH1: 2 V / DIV TIME: 100 ms / DIV
Measurement condition	Vehicle speed at 10 km/h (6 mph)

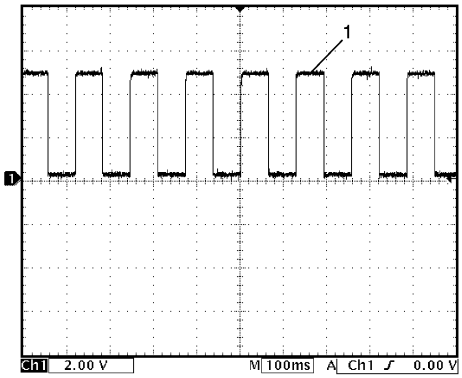

I5RW0AA20014-01

Reference waveform No. 8
A/C or rear end door window / back window defogger switch signal (1)

Measurement terminal	Rear end door window / back window defogger switch CH2: “G04-17” to “G271-3” A/C switch CH2: “G04-18” to “G271-3”
Oscilloscope setting	CH2: 5 V/DIV TIME: 10 ms/DIV
Measurement condition	Rear end door window / back window defogger switch: • Ignition switch is at ON position and rear end door window / back window defogger switch is not pushed A/C switch: • Ignition switch is at ON position, A/C switch or blower speed selector is at OFF position

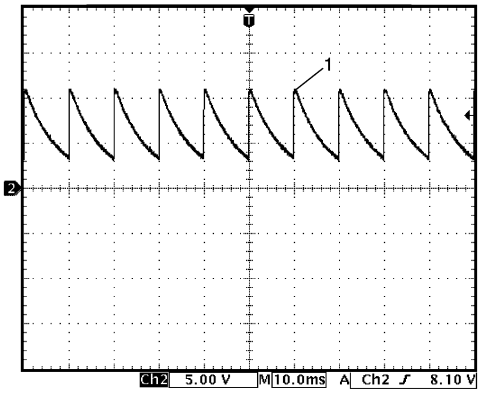

I4RS0AA20023-02

Reference waveform No. 9

Rear wiper switch signal (1)

Measurement terminal	Rear wiper INT switch CH2: “G04-21” to “G271-3” Rear wiper LOW switch CH2: “G04-22” to “G271-3”
Oscilloscope setting	CH2: 5 V/DIV TIME: 10 ms/DIV
Measurement condition	Rear wiper INT switch: • Ignition switch is at ON position and rear wiper switch is at any position other than INT position Rear wiper LOW switch: • Ignition switch is at ON position and rear wiper switch is at any position other than LOW position

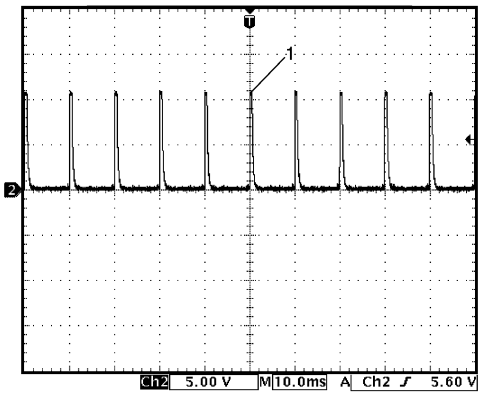

I4RS0AA20024-02

Reference waveform No. 10

SDM communication signal (1)

Measurement terminal	CH2: “L314-2” to “G271-3”
Oscilloscope setting	CH2: 2 V / DIV TIME: 400 ms / DIV
Measurement condition	Ignition switch is at ON position

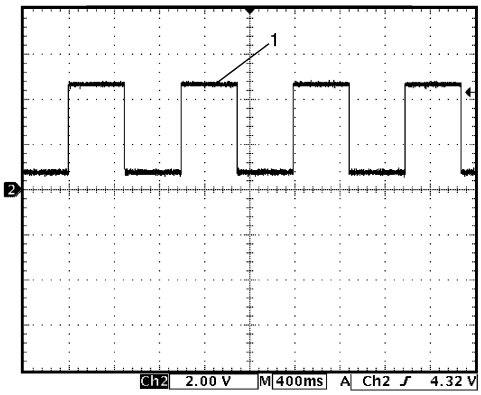

I4RS0AA20026-02

Repair Instructions

BCM (Included in Junction Block) Removal and Installation

S7RW0AA206001

⚠ CAUTION

Do not attempt removal of BCM from junction block as it may cause contact failure.
If there is faulty condition in BCM, replace junction block assembly.

Removal

1) Disconnect negative cable from battery.
2) Disable air bag system referring to “Disabling Air Bag System in Section 8B”.
3) Remove dash side trim (1) and steering column hole cover (2).
4) Remove junction block mounting nuts (3).

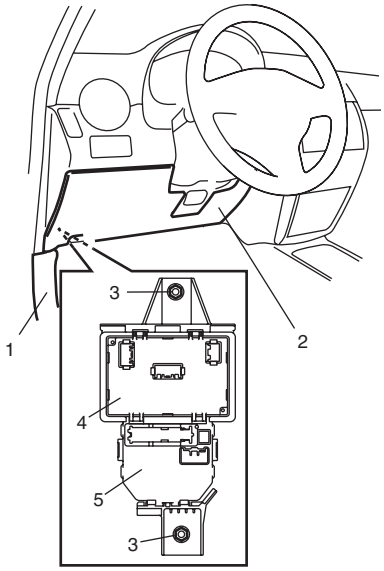

I5RW0AA20015-01

4. BCM	5. Junction block

5) Disconnect connectors from BCM and junction block.
6) Detach wiring harness clamp from junction block.

Installation

Reverse removal procedure for installation, noting following points.

- Connect connectors securely.
- Enable air bag system referring to “Enabling Air Bag System in Section 8B”.
- With keyless entry system (other than keyless start model), if BCM is replaced, register transmitter code into BCM, referring to “Programming Transmitter Code for Keyless Entry System (Other than Keyless Start Model) in Section 9F”.

Security Alarm Mode Selection Procedure (If Equipped)

S7RW0AA206002

Security alarm mode can be selected by performing the following procedure.

1) Confirm that all doors are closed, all doors are unlocked and ignition key is inserted in ignition key cylinder.
2) Remove ignition key from ignition key cylinder.
3) Perform Step a) through e) described below within 15 seconds.
   a) Insert ignition key (1) in ignition key cylinder (2).
   b) Remove ignition key from ignition key cylinder.
   c) Repeat Step a) and b) twice.
   d) Insert ignition key in ignition key cylinder.
   e) Push lock side (3) of driver side manual lock switch (4) 3 times.

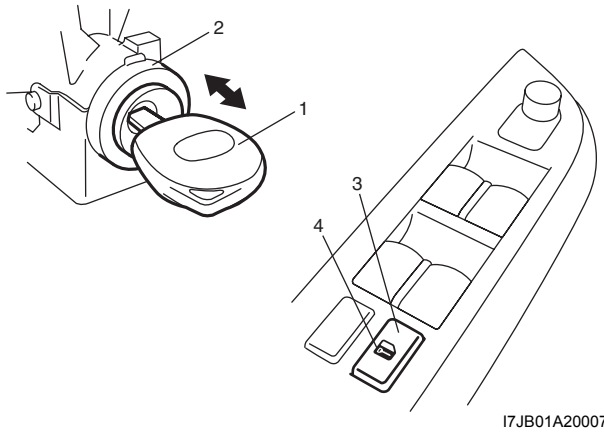

I7JB01A20007-01

4) When Step 3) is completed, the mode changes to the next one automatically. The warning buzzer (located in BCM) sounds by the number of specified for each mode as follows.
   - Changed from A mode to B mode: Buzzer sounds 4 times
   - Changed from B mode to A mode: Buzzer sounds once

Outside Air Temperature Sensor Removal and Installation

S7RW0AA206003

For removal and installation, refer to “Outside Air Temperature Sensor Removal and Installation (If Equipped) in Section 9C”.

Outside Air Temperature Sensor Inspection

S7RW0AA206004

For inspection, refer to “Outside Air Temperature Sensor Inspection (If Equipped) in Section 9C”.

Special Tools and Equipment

Special Tool

S7RW0AA208001

SUZUKI scan tool — This kit includes following items. 1. Tech 2, 2. PCMCIA card, 3. DLC cable, 4. SAE 16/19 adapter, 5. Cigarette cable, 6. DLC loop back adapter, 7. Battery power cable, 8. RS232 cable, 9. RS232 adapter, 10. RS232 loop back connector, 11. Storage case, 12.☞ 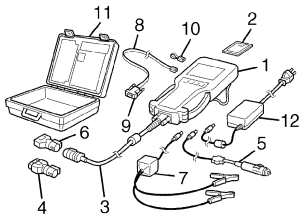	

Immobilizer Control System

Precautions

Precautions in Diagnosing Troubles

S7RW0AA300001

- Before confirming the diagnostic trouble code (DTC), do not disconnect connector from ECM, battery cable from battery, ground wire harness, or main fuse. Such disconnection will erase DTC stored in ECM.
- DTC stored in ECM memory can be checked as well as cleared by using SUZUKI scan tool. Before using SUZUKI scan tool, read its operator's manual carefully to know how to use it and what functions are available.
- Be sure to read "Precautions for Electrical Circuit Service in Section 00" before inspection.
- Communication of ECM, BCM, ABS control module, TCM (if equipped), 4WD control module (if equipped), keyless start control module (if equipped), combination meter and DLC is established by CAN (Controller Area Network). Therefore, handle CAN communication lines with care referring to "Precaution for CAN Communication System in Section 00".
  For CAN communication system, refer to description on "CAN Communication System Description in Section 1A".

Precaution in Replacing ECM

S7RW0AA300002

- If ECM is replaced with new or used one without Immobilizer control function, the engine will not be started. In case of the above, check if the newly installed ECM has Immobilizer control function.
- After ECM is replaced with new one or used one, the transponder code in the transponder built in the ignition key has to be registered with ECM. Or, the engine cannot be started up. For the registration procedure, refer to "Procedure after ECM Replacement".

Precaution in Replacing Ignition Key

S7RW0AA300003

To register ignition key in case of replacing key(s) and/or making spare key(s), the transponder code in the ignition key is registered with ECM. Or the engine can not be started up. For the registration procedure, refer to "Registration of the Ignition Key".

Precautions in Handling Immobilizer Control System

S7RW0AA300004

- Do not turn ON ignition switch with ignition key in contact with another one or quite close to another one. Or, the immobilizer control system may detect some abnormal condition and prevent the engine from starting.

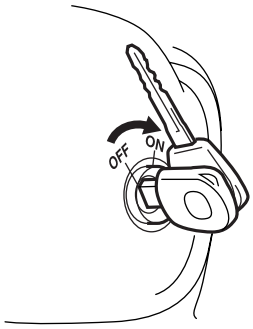

I3RH0AA30001-01

- Do not turn ON ignition switch by using ignition key with any type of metal (1) wrapped its grip or in contact with it. Or, the immobilizer control system may detect some abnormal condition and prevent the engine from starting.

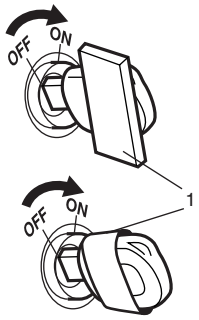

I3RH0AA30002-01

- Do not leave ignition key in a place where temperature is high. High temperature may cause damage to the transponder built in the ignition key.

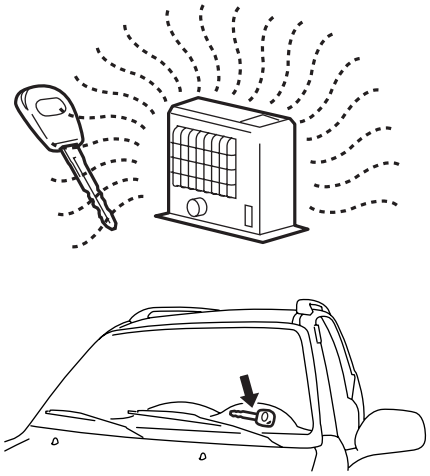

I3RH0AA30003-01

- Do not turn ignition switch to ON position by bringing radio antenna close to coil antenna. Or, the immobilizer control system may detect some abnormal condition and prevent the engine from starting.

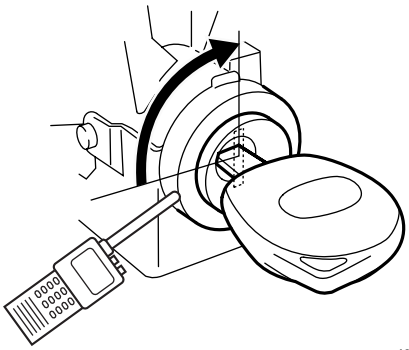

I3RH0AA30004-01

General Description

Immobilizer Control System Introduction

S7RW0AA301001

The immobilizer control system is an anti-theft device that immobilizes the vehicle. It stops the engine from working and prevents the vehicle from being stolen. It mainly consists of the following components. For immobilizer control system components location, refer to “Immobilizer Control System Components Location”.

- ECM
- ICM with the built-in coil antenna
- Ignition key with the built-in transponder

A code called the transponder code is memorized in the transponder. And, the code is registered with ECM. Basically, when the ignition switch is turned ON, ECM reads the code by the coil antenna. Then, if the code in transponder in the ignition key does not match with the one registered with ECM, ECM stops the operation of the fuel injection so as not to start up the engine and turns the immobilizer indicator light ON and OFF using CAN communication lines. (In addition to the above operation, ECM also turns the immobilizer indicator light ON and OFF when some trouble is detected in the keyless start system.)

On-Board Diagnostic System Description (Self-diagnosis Function)

S7RW0AA301002

ECM diagnoses if there is any trouble with the immobilizer control system. The diagnostic information is stored as the diagnostic trouble code (DTC) in ECM. To read the diagnostic information, use SUZUKI scan tool referring to “DTC Check”.

With the ignition switch turned ON (but the engine at stop) regardless of the condition of the engine and emission control system, ECM indicates whether there is any trouble with the immobilizer control system or not by either lighting ON or flashing ON and OFF the immobilizer indicator light.

Immobilizer indicator light lights ON:

No trouble exists in the immobilizer control system. (After starting up the engine, the light turns OFF.)

Immobilizer indicator light flashes ON and OFF:

There is some trouble in the immobilizer control system or in the keyless start system. Its diagnostic information is stored in ECM.

Schematic and Routing Diagram

Immobilizer Control System Wiring Circuit Diagram

S7RW0AA302001

NOTE

For more details about power supply circuit, ground wire circuit, and each circuit for ECM, BCM, ABS control module, keyless start control module and combination meter, refer to “System Circuit Diagram in Section 9A”.

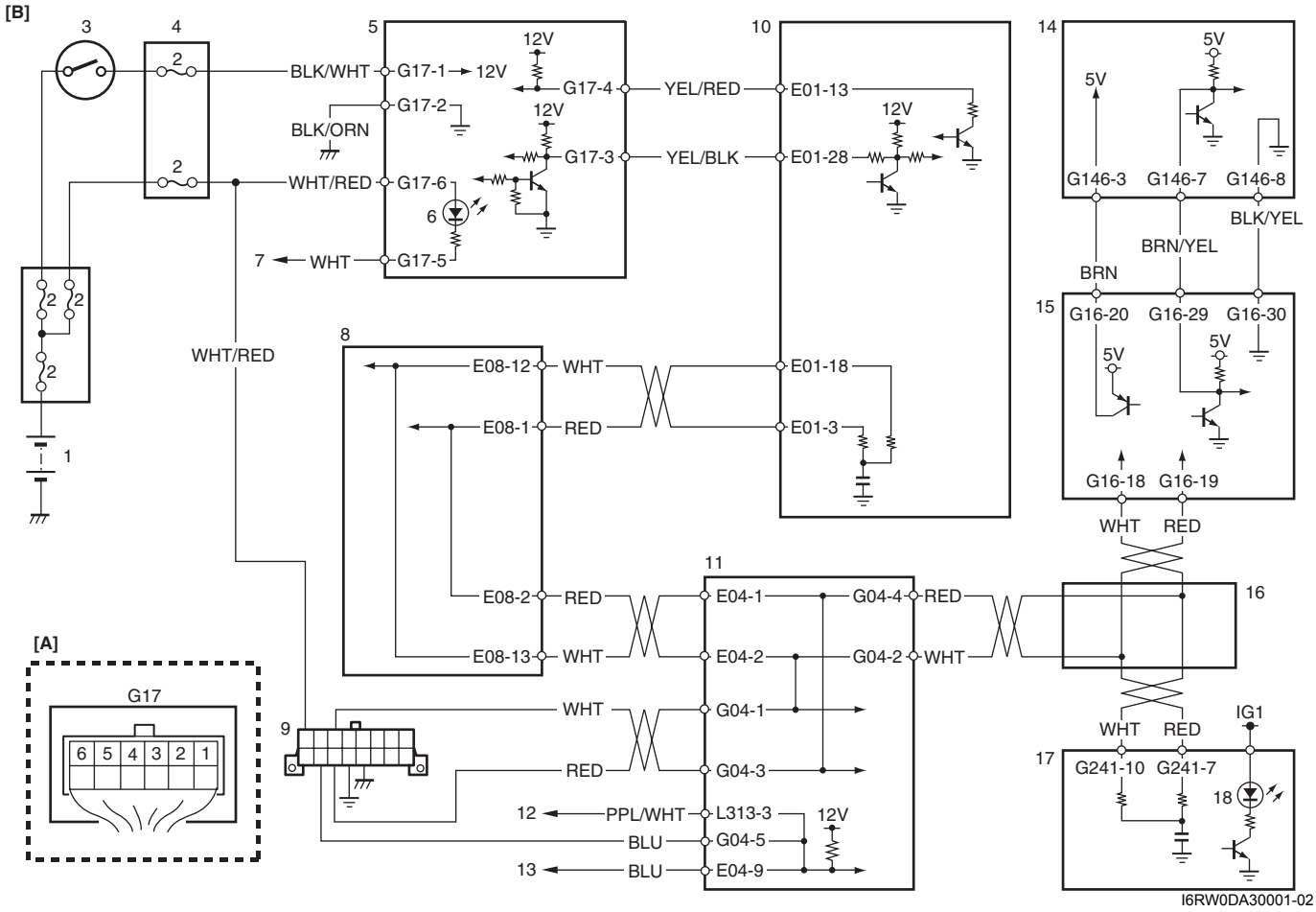

I6RW0DA30001-02

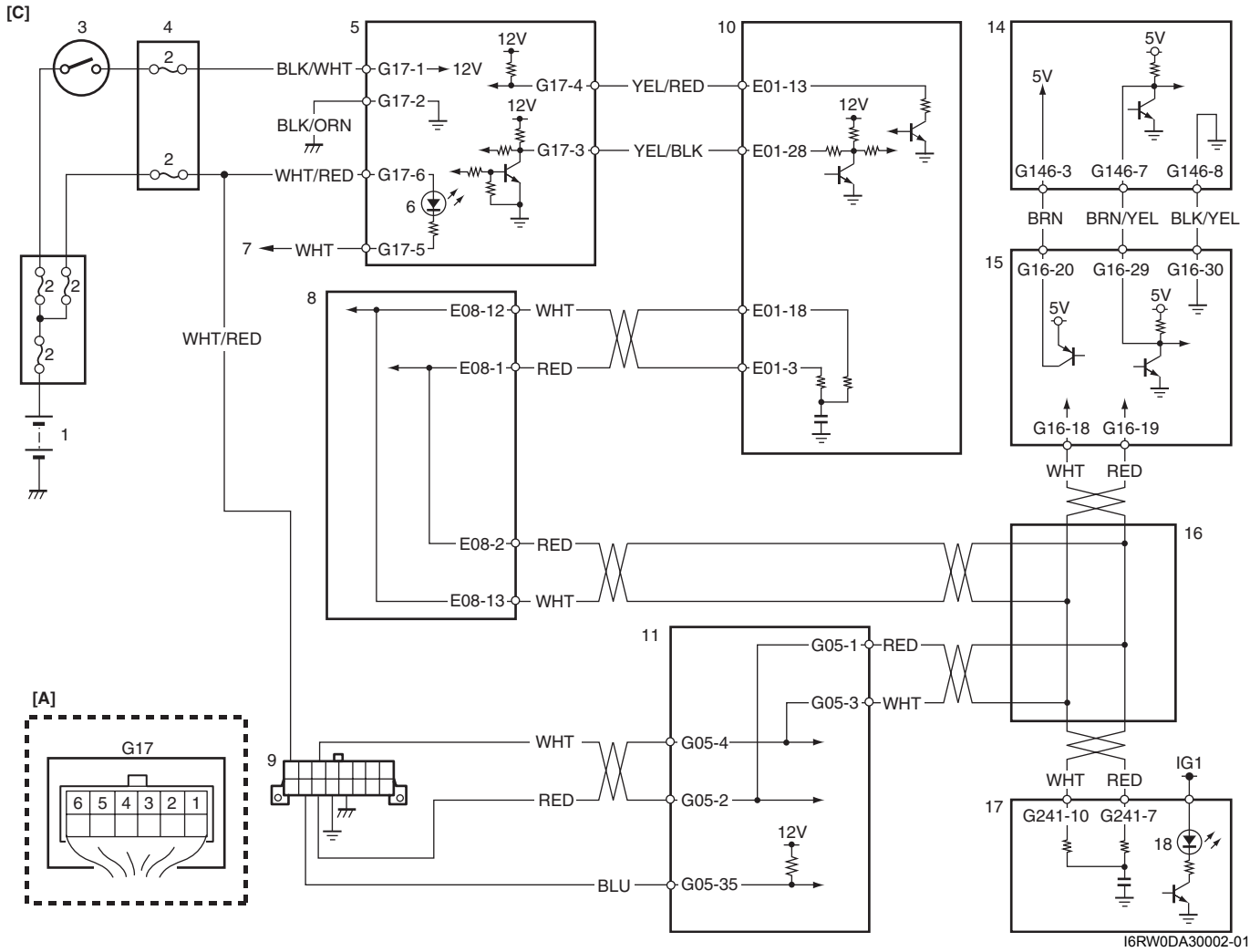

[A]: ICM connector (harness side view)	5. ICM	12. To SDM
[B]: Junction block with BCM type	6. Illumination ring (if equipped)	13. To ABS control module
[C]: Junction block without BCM type	7. To BCM	14. Steering lock unit (keyless start model)
1. Battery	8. ABS control module	15. Keyless start control module (if equipped)
2. Fuse	9. DLC	16. CAN junction connector
3. Ignition switch	10. ECM	17. Combination meter
4. Junction block	11. BCM	18. Immobilizer indicator light

Component Location

Immobilizer Control System Components Location

S7RW0AA303001

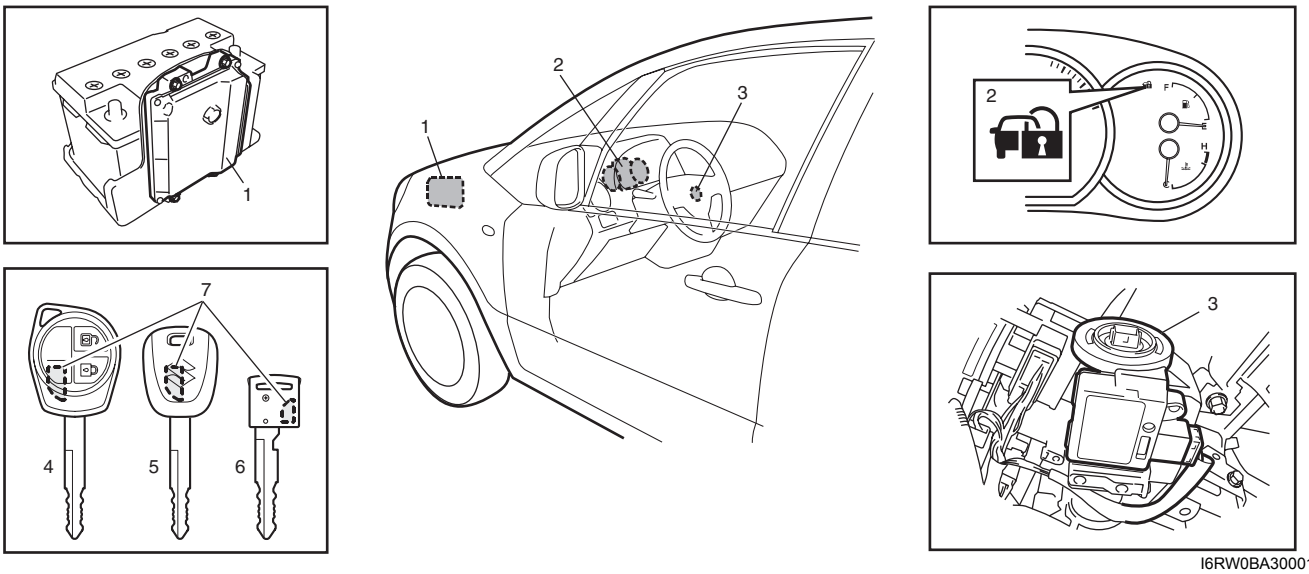

I6RW0BA30001-01

1. ECM	5. Ignition key (non keyless entry model)
2. Immobilizer indicator light	6. Ignition key (keyless start model)
3. ICM	7. Transponder
4. Ignition key (keyless entry model)	

Diagnostic Information and Procedures

Immobilizer Control System Check

S7RW0AA304001

Step	Action	Yes	No
1	**Immobilizer indicator light check** 1) Turn ignition switch to ON position using ignition key. *Does immobilizer indicator light come on?*	Go to Step 2.	Check if DTC P1636 and/or P1638 are detected by ECM referring to “DTC Check”. If detected, go to applicable DTC diag. flow. If not detected, go to “Immobilizer Indicator Light Does Not Come ON with Ignition Switch ON and Engine Stop”.
2	**Immobilizer indicator light check** *Does immobilizer indicator light flash on and off continuously in Step 1?*	Check ECM for DTC referring to “DTC Check”. Then, go to applicable DTC diag. flow.	Go to Step 3.
3	**Engine start check** 1) Start engine using ignition key. *Does engine start?*	Go to Step 4.	Go to “Engine and Emission Control System Check in Section 1A”.
4	**Immobilizer indicator light check** 1) Check if immobilizer indicator light remains ON after engine start. *Does immobilizer indicator light remains ON after engine start?*	Go to “Immobilizer Indicator Light Remains ON after Engine Start”.	Immobilizer control system is in good condition. Then, go to “Keyless Start System Check in Section 10E” for keyless start model.

DTC Check

S7RW0AA304002

NOTE

To know how to use SUZUKI scan tool in detail, refer to its operator's manual.

1) Turn the ignition switch to OFF position.
2) Connect SUZUKI scan tool to data link connector (DLC) (1) located under instrument panel at driver's seat side.

Special tool
(A): SUZUKI scan tool (SUZUKI-SDT)

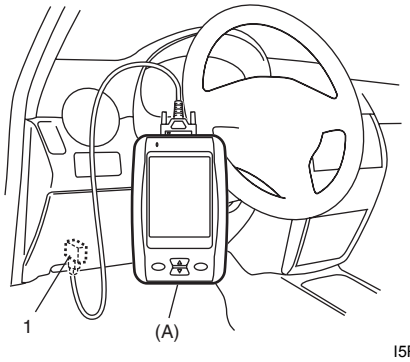

I5RW0CA30002-01

3) Turn the ignition switch to ON position.
4) Read DTC according to instructions displayed on SUZUKI scan tool and print them or write them down. Refer to scan tool operator's manual for details.
   If communication between scan tool and ECM is not possible, go to "Troubleshooting for Communication Error with Scan Tool Using CAN in Section 1A".
5) After completing the check, turn ignition switch to OFF position, and then disconnect SUZUKI scan tool from DLC.

DTC Clearance

S7RW0AA304003

NOTE

To know how to use SUZUKI scan tool in detail, refer to its operator's manual.

1) Turn the ignition switch to OFF position,
2) Connect SUZUKI scan tool to data link connector (DLC) (1) located under instrument panel at driver's seat side.

Special tool
(A): SUZUKI scan tool (SUZUKI-SDT)

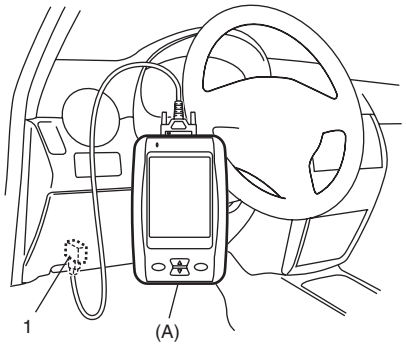

I5RW0CA30002-01

3) Turn the ignition switch to ON position.
4) Clear DTC(s) according to the instructions displayed on SUZUKI scan tool.
5) After completing the clearance, turn the ignition switch to OFF position, and then disconnect SUZUKI scan tool from DLC.

DTC Table

S7RW0AA304004

ECM

NOTE

ECM detects DTC. ICM does not.

DTC No.	Detecting Item	Detecting Condition	Immobilizer Indicator Light
☞ P1614	Transponder response error	Transponder code in transponder built in ignition key cannot be read through ICM.	Flash
☞ P1615	Steering lock unit communication error	• While registering the transponder code in the transponder built in the ignition key in ECM, the keyless start control module sent a signal to ECM indicating that the ID code could not be registered. • The ID code could not be registered in the keyless start control module or ECM.	Flash
☞ P1616	Unregistered keyless start control module	ECM detects different ID codes registered in ECM and keyless start control module.	Flash
☞ P1618	Keyless start control module CAN communication error	Reception error of communication data for keyless start control module is detected for longer than specified time continuously.	Flash
☞ P1621	Immobilizer communication line error	Communication error between ICM and ECM.	Flash
☞ P1622	EEPROM reading / writing error	EEPROM in ECM is corrupted.	Flash
☞ P1623	Unregistered transponder	Transponder code in the transponder built in the ignition key is invalid.	Flash
☞ P1625	Immobilizer antenna error	ICM is faulty.	Flash
☞ P1636	Immobilizer information registration failure	Communication error between ECM and BCM.	No operation
☞ P1638	Immobilizer information mismatched	• Communication error between ECM and BCM. • Wrong ECM or BCM is used.	No operation

NOTE

If any DTC other than the above DTCs is detected, refer to “DTC Table in Section 1A”.

Scan Tool Data

S7RW0AA304005

Suzuki scan tool displays the following data using “Registration Information” mode.

Scan Tool Data (Registration Information Data)	Vehicle Condition	Normal Data
☞ Component ID	Ignition switch at ON position	****
☞ Keyfree System Code		Registered
☞ Remote Starter Code		Unregistered
☞ Number of the Registered Immobilizer Key		2 Keys
☞ Latest Year for the Key Registration		2006
☞ Latest Month for the Key Registration		June

Scan Tool Data Definitions

Component ID (****)

This parameter indicates the vehicle ID number of four digits used for the Suzuki scan tool.

Keyfree System Code (Keyless start control system ID code, Registered, Unregistered)

Registered: ID code of the keyless start system is registered in the ECM.
Unregistered: ID code of the keyless start system is unregistered in the ECM.

Remote Starter Code (Remote starter control system code, Registered, Unregistered)

Registered: Remote starter system is registered in the ECM.
Unregistered: Remote starter system is unregistered in the ECM.

Number of the Registered Immobilizer Key (0 – 4 keys)

The number of the transponder code in the transponder built in the ignition key that is registered with ECM.

NOTE

A maximum of four transponder codes can be registered with ECM. Therefore, the maximal value should be 4.

Latest Year for the Key Registration (2006 or Later)

The year in which the transponder code in the transponder built in the ignition key is registered with ECM.

Latest Month for the Key Registration (January-December)

The month in which the transponder code in the transponder built in the ignition key is registered with ECM.

Immobilizer Indicator Light Does Not Come ON with Ignition Switch ON and Engine Stop

S7RW0AA304006

Wiring Diagram

Refer to “Immobilizer Control System Wiring Circuit Diagram”.

Circuit Description

When the ignition switch is turned ON, ECM transmits the indication ON signal to the combination meter to turn ON the immobilizer indicator light in case that there is not any problem with the immobilizer control system. Then, the combination meter turns ON the light. When the engine is started up, ECM transmits the indication OFF signal to the combination meter to turn OFF the light. Then, the combination meter turns OFF the immobilizer indicator light. However, in case that there is some trouble with the immobilizer control system, the immobilizer indicator light flashes ON and OFF when the ignition switch is turned ON.

Troubleshooting

Step	Action	Yes	No
1	**Immobilizer indicator light power supply check** 1) Turn the ignition switch to ON position. *Do other warning lights come ON?*	Go to Step 2.	Go to Step 4.
2	**DTC check of ECM** 1) Check ECM for DTC referring to “DTC Check in Section 1A”. *Is DTC U0073, U0101, U0121 and/or U0140 detected?*	Go to applicable DTC diag. flow.	Go to Step 3.
3	**DTC check of BCM** 1) Check BCM for DTC referring to “DTC Check in Section 10B”. *Is DTC U0073, U0100, U0101, U0155 and/or U1144 detected?*	Go to applicable DTC diag. flow.	Substitute a known-good combination meter and recheck. If immobilizer indicator light still remains OFF, substitute a known-good ECM and recheck.
4	**Fuse check** 1) Turn the ignition switch to OFF position. 2) Check fuse for combination meter circuit. *Is fuse blown?*	Replace blown fuse, and then check for short.	Go to Step 5.
5	**Combination meter power supply wire circuit check** 1) Remove combination meter referring to “Combination Meter Removal and Installation in Section 9C”. 2) Check for proper connection at terminals and wires of combination meter connector. 3) If OK, turn the ignition switch to ON position and measure voltage between power supply terminal of combination meter and vehicle body ground. Refer to “Combination Meter Circuit Diagram in Section 9C”. *Is it 10 – 14 V?*	Go to Step 6.	Repair open in power supply wire circuit.
6	**Combination meter ground wire circuit check** 1) Turn ignition switch OFF position. 2) Measure resistance between ground terminal of combination meter connector and vehicle body ground. Refer to “Combination Meter Circuit Diagram in Section 9C”. *Is resistance 1 Ω or less?*	Substitute a known-good combination meter and recheck. If still remains OFF, substitute a known-good ECM and recheck.	Repair open or high resistance in ground circuit.

Immobilizer Indicator Light Remains ON after Engine Start

S7RW0AA304007

Wiring Diagram

Refer to “Immobilizer Control System Wiring Circuit Diagram”.

Circuit Description

Refer to “Immobilizer Indicator Light Does Not Come ON with Ignition Switch ON and Engine Stop”.

Troubleshooting

Step	Action	Yes	No
1	**DTC check of ECM** 1) Check ECM for DTC referring to “DTC Check in Section 1A”. *Is DTC detected?*	Go to applicable DTC diag. flow.	Go to Step 2.
2	**CAN communication circuit check** 1) Disconnect connectors from ECM, BCM, ABS control module and combination meter. 2) Check CAN communication circuit for open, short and high resistance. • Between ECM and ABS control module • Between BCM and ABS control module • Between BCM and combination meter *Is each CAN communication circuit in good condition?*	Substitute a known-good combination meter and recheck. If immobilizer indicator light still remains ON, substitute a known-good ECM and recheck.	Repair circuit.

DTC P1614: Transponder Response Error

S7RW0AA304008

Wiring Diagram

Refer to “Immobilizer Control System Wiring Circuit Diagram”.

Detecting Condition and Trouble Area

Detecting Condition	Trouble Area
Transponder code in transponder built in ignition key cannot be read through ICM.	• Use of ignition key without transponder • Use of unregistered ignition key • Corruption of transponder in ignition key • ICM • ECM

Troubleshooting

Step	Action	Yes	No
1	*Was “Immobilizer Control System Check” performed?*	Go to Step 2.	Go to “Immobilizer Control System Check”.
2	**DTC check of ECM** 1) Check if any DTC other than P1614 is detected referring to “DTC Check”. *Is DTC other than P1614 detected?*	Go to applicable DTC diag. flow.	Go to Step 3.
3	**Registration of ignition key in use with ECM** 1) Register ignition key in use with ECM referring to “Registration of the Ignition Key”. *Was registration of ignition key completed?*	Recheck DTC.	Go to Step 4.
4	**Registration of the spare ignition key** 1) Register the spare ignition key with ECM referring to “Registration of the Ignition Key”. *Was registration of spare ignition key completed?*	Replace ignition key which can not be registered.	Substitute a known-good ECM and recheck.

DTC P1615: Steering Lock Unit Communication Error

S7RW0AA304009

Wiring Diagram

Refer to “Immobilizer Control System Wiring Circuit Diagram”.

Circuit Description

When the transponder code in the ignition key is registered in ECM, the ID code is registered in both ECM and keyless start control module at the same time. This DTC is detected only in case that the ID code cannot be registered in both ECM and keyless start control module when the transponder code in the ignition key is registered in ECM.

NOTE

- **Troubleshoot DTC P1618 first if both DTC P1615 and P1618 are detected at the same time.**
- **After replacing ECM, be sure to register the transponder code in the ignition key with ECM referring to “Registration of the Ignition Key”. After replacing the keyless start control module of the vehicle equipped with the keyless start system, be sure to perform “Registration of the Ignition Key”.**

Detecting Condition and Trouble Area

Detecting Condition	Trouble Area
• While registering the transponder code in ECM, the keyless start control module sent a signal to ECM indicating that the ID code could not be registered. • The ID code could not be registered in the keyless start control module or ECM.	• Wire circuits between steering lock unit and keyless start control module • CAN communication circuit • Steering lock unit • Keyless start control module • Combination meter • TCM (if equipped) • 4WD control module (if equipped) • ABS control module • BCM • ECM

Troubleshooting

Step	Action	Yes	No
1	*Was “Immobilizer Control System Check” performed?*	Go to Step 2.	Go to “Immobilizer Control System Check”.
2	**Registration of ignition key** 1) Register ignition key in use with ECM referring to “Registration of the Ignition Key”. *Was registration of ignition key completed?*	Recheck ECM for DTC. If DTC P1615 is still detected, go to Step 3.	Go to Step 3.
3	**DTC check of ECM** 1) Check ECM for DTC referring to “DTC Check in Section 1A”. *Is DTC U0073, U0101, U0121 and/or U0140 detected?*	Go to applicable DTC diag. flow.	Go to Step 4.
4	**DTC check of keyless start control module** 1) Check keyless start control module for DTC referring to “DTC Check in Section 10E”. *Is DTC detected?*	Go to applicable DTC diag. flow.	Go to Step 5.
5	**Check for communication circuit between steering lock unit and keyless start control module** 1) Check for open, short, and high resistance in steering lock unit circuit. Refer to Step 2 in “DTC No. 11: Communication Error with Steering Lock Unit in Section 10E”. *Is each circuit in good condition?*	Go to Step 6.	Repair malfunction part and recheck.

Step	Action	Yes	No
6	**Steering lock unit power supply check** 1) Connect keyless start control module connector. 2) With ignition switch at ON position, check power supply terminal voltage of steering lock unit connector. Refer to “Keyless Start Control Module Power and Ground Circuit Check in Section 10E”. *Is voltage 4 – 6 V?*	Replace steering lock unit and recheck.	Substitute a known-good keyless start control module and recheck. If DTC P1615 is still detected, substitute a known-good ECM and recheck.

DTC P1616: Unregistered Keyless Start Control Module

S7RW0AA304010

Wiring Diagram

Refer to “Immobilizer Control System Wiring Circuit Diagram”.

Circuit Description

P1616 is detected when ECM detects different ID codes registered in ECM and keyless start control module after turning engine start knob to ON position. Normally, when keyless start control module is replaced with new one, ECM automatically registers the applicable code in keyless start control module after turning ignition switch to ON position. However, when keyless start control module is replaced with used one, ECM does not automatically register the applicable code in keyless start control module even if ignition switch is turned to ON position.

Detecting Condition and Trouble Area

Detecting Condition	Trouble Area
ECM detects different ID codes registered in ECM and keyless start control module.	• Keyless start system wire circuit • Keyless start control module • ECM

Troubleshooting

Step	Action	Yes	No
1	*Was “Immobilizer Control System Check” performed?*	Go to Step 2.	Go to “Immobilizer Control System Check”.
2	**Registration of the ignition key** 1) Register the ignition key with ECM referring to “Registration of the Ignition Key”. *Was registration of ignition key completed?*	Recheck ECM for DTC.	Go to Step 3.
3	**DTC check of ECM** 1) Check DTC referring to “DTC Check”. *Is DTC P1618 and/or P1615 detected other than P1616?*	Go to DTC P1618 troubleshooting.	Go to DTC P1615 troubleshooting.

DTC P1618: Keyless Start Control Module CAN Communication Error

S7RW0AA304011

Refer to “Troubleshooting for CAN-DTC in Section 1A”.

DTC P1621: Immobilizer Communication Line Error

S7RW0AA304012

Wiring Diagram

Refer to “Immobilizer Control System Wiring Circuit Diagram”.

Detecting Condition and Trouble Area

Detecting Condition	Trouble Area
Communication error between ICM and ECM.	• Related fuse(s) blown • Poor connection at ICM connector • Poor connection at ECM connector • Power supply circuit • Ground circuit • Communication circuits between ICM and ECM • ICM • ECM

Troubleshooting

Step	Action	Yes	No
1	*Was “Immobilizer Control System Check” performed?*	Go to Step 2.	Go to “Immobilizer Control System Check”.
2	**Fuse check** 1) Check fuse for ICM circuit. *Is fuse in good condition?*	Replace blown fuse(s) and then, check for short circuit.	Go to Step 3.
3	**Voltage check at power and ground terminal** 1) Check power and ground terminal voltage of ICM connector referring to “Inspection of ICM and Its Circuit”. *Is each terminal voltage in good condition?*	Go to Step 4.	Repair circuit.
4	**ICM and ECM connector check** 1) With the ignition switch at OFF position, check intermittent and poor connection of ICM connector and ECM connectors referring to “Intermittent and Poor Connection Inspection in Section 00”. *Is each connector in good condition?*	Go to Step 5.	Repair poor connection.
5	**Communication circuit check between ICM and ECM** 1) Check for open, short and high resistance in serial communication and clock circuit between ICM and ECM. *Is each communication circuit in good condition?*	Substitute a known-good ICM and recheck. If DTC P1621 is still detected, substitute a known good ECM and recheck.	Repair circuit.

DTC P1622: EEPROM Reading / Writing Error

S7RW0AA304013

Detecting Condition and Trouble Area

Detecting Condition	Trouble Area
EEPROM in ECM is corrupted.	Internal failure (EEPROM corruption) of ECM

Troubleshooting

1) Clear DTC(s) referring to “DTC Clearance”.
2) Turn the ignition switch to OFF position.
3) Check if DTC P1622 is still detected referring to “DTC Check”. If still detected, go to the next step. If not, the troubleshooting is completed.
4) Replace ECM with new one referring to “Engine Control Module (ECM) Removal and Installation in Section 1C”.
5) Perform “Procedure after ECM Replacement”.

DTC P1623: Unregistered Transponder

S7RW0AA304014

Wiring Diagram

Refer to “Immobilizer Control System Wiring Circuit Diagram”.

Detecting Condition and Trouble Area

Detecting Condition	Trouble Area
Transponder code in the transponder built in the ignition key is invalid.	• Use of the unregistered ignition key • ICM • ECM

Troubleshooting

Step	Action	Yes	No
1	*Was “Immobilizer Control System Check” performed?*	Go to Step 2.	Go to “Immobilizer Control System Check”.
2	**DTC check of ECM** 1) Check if any DTC other than P1623 is detected referring to “DTC Check”. *Is DTC other than P1623 detected?*	Go to applicable DTC diag. flow.	Go to Step 3.
3	**Registration of unregistered ignition key with ECM** 1) Register the unregistered ignition key with ECM referring to “Registration of the Ignition Key”. *Was registration of ignition key completed?*	Recheck DTC.	Go to Step 4.
4	**Registration of the spare ignition key** 1) Register the spare ignition key referring to “Registration of the Ignition Key”. *Was registration of spare ignition key completed?*	Replace ignition key which cannot be registered.	Substitute a known-good ECM and recheck.

DTC P1625: Immobilizer Antenna Error

S7RW0AA304015

Wiring Diagram

Refer to “Immobilizer Control System Wiring Circuit Diagram”.

Detecting Condition and Trouble Area

Detecting Condition	Trouble Area
ICM is faulty.	• ICM • ECM

Troubleshooting

Step	Action	Yes	No
1	*Was “Immobilizer Control System Check” performed?*	Go to Step 2.	Go to “Immobilizer Control System Check”.
2	**DTC confirmation** 1) Clear DTC referring to “DTC Clearance”. 2) Turn the ignition switch to OFF position. 3) Check DTC referring to “DTC Check”. *Is DTC P1625 still detected?*	Substitute a known-good ICM and recheck DTC. If DTC P1625 is still detected, substitute a known-good ECM and recheck.	Intermittent trouble. Check for intermittent referring to “Intermittent and Poor Connection Inspection in Section 00”.

DTC P1636: Immobilizer Information Registration Failure

S7RW0AA304016

Wiring Diagram

Refer to “Immobilizer Control System Wiring Circuit Diagram”.

Detecting Condition and Trouble Area

Detecting Condition	Trouble Area
The registration of the immobilizer control system information in ECM is failed.	• CAN communication circuit • Keyless start control module (if equipped) • Combination meter • TCM (A/T model) • 4WD control module (if equipped) • ABS control module • BCM • ECM

Troubleshooting

Step	Action	Yes	No
1	*Was “Immobilizer Control System Check” performed?*	Go to Step 2.	Go to “Immobilizer Control System Check”.
2	**DTC check of ECM** 1) Check ECM for DTC referring to “DTC Check in Section 1A”. *Is DTC U0073, U0101, U0121 and/or U0140 detected?*	Go to applicable DTC diag. flow.	Go to Step 3.
3	**DTC check of BCM** 1) Check BCM for DTC referring to “DTC Check in Section 10B”. *Is DTC U0073, U0100, U0101, U0155 and/or U1144 detected?*	Go to applicable DTC diag. flow.	Go to Step 4.

Step	Action	Yes	No
4	**CAN communication circuit check** 1) Disconnect connectors from ECM, BCM and ABS control module. 2) Check CAN communication circuit for open, short and high resistance. • Between ECM and ABS control module • Between BCM and ABS control module *Is each CAN communication circuit in good condition?*	Go to Step 5.	Repair circuit.
5	**Replacement of BCM** 1) Replace BCM with new one referring to “BCM (Included in Junction Block) Removal and Installation in Section 10B”. 2) Check ECM for DTC referring to “DTC Check”. *Is DTC P1636 still detected?*	Substitute a known-good ECM and recheck.	BCM faulty.

DTC P1638: Immobilizer Information Mismatched

S7RW0AA304017

Wiring Diagram

Refer to “Immobilizer Control System Wiring Circuit Diagram”.

Detecting Condition and Trouble Area

Detecting Condition	Trouble Area
• The immobilizer control system information in ECM and the one in BCM does not match. • The registration of the immobilizer control system information in ECM is failed.	• Use of the wrong ECM • CAN communication circuit • Keyless start control module (if equipped) • Combination meter • TCM (A/T model) • 4WD control module (if equipped) • ABS control module • BCM • ECM

Troubleshooting

Step	Action	Yes	No
1	*Was “Immobilizer Control System Check” performed?*	Go to Step 2.	Go to “Immobilizer Control System Check”.
2	**DTC confirmation** 1) Disconnect negative (–) cable from battery for more than 5 seconds. 2) Connect negative (–) cable to battery. 3) Check if any DTC is detected referring to “DTC Check”. *Is DTC P1638 still detected?*	Go to Step 3.	Intermittent trouble. Check for intermittent referring to “Intermittent and Poor Connection Inspection in Section 00”.
3	**ECM specification check** 1) Check ECM part number to see if ECM is applicable to the vehicle in service. *Is a correct ECM used for the vehicle in service?*	Go to Step 4.	Replace ECM with the correct one and recheck if DTC P1638 is still detected by ECM.
4	**DTC check of ECM** 1) Check ECM for DTC referring to “DTC Check in Section 1A”. *Is DTC U0073, U0101, U0121 and/or U0140 detected?*	Go to applicable DTC diag. flow.	Go to Step 5.

Step	Action	Yes	No
5	**DTC check of BCM** 1) Check BCM for DTC referring to “DTC Check in Section 10B”. *Is DTC U0073, U0100, U0101, U0155 and/or U1144 detected?*	Go to applicable DTC diag. flow.	Go to Step 6.
6	**CAN communication circuit check** 1) Disconnect connectors from ECM, BCM and ABS control module. 2) Check CAN communication circuit for open, short and high resistance. • Between ECM and ABS control module • Between BCM and ABS control module *Is each CAN communication circuit in good condition?*	Go to Step 7.	Repair circuit.
7	**Replacement of BCM** 1) Replace BCM with new one referring to “BCM (Included in Junction Block) Removal and Installation in Section 10B”. 2) Check ECM for DTC referring to “DTC Check”. *Is DTC P1638 still detected?*	Substitute a known-good ECM and recheck.	BCM faulty.

Inspection of ICM and Its Circuit

S7RW0AA304018

ICM and its circuit can be checked at ICM wiring connector by measuring voltage.

⚠ CAUTION

ICM cannot be checked by itself. It is strictly prohibited to connect voltmeter or ohmmeter to ICM with connector disconnected from it.

Voltage Check

1) Remove ICM (1) from steering lock assembly or steering lock unit referring to “ICM Removal and Installation”.
2) Connect ICM connector (2) to ICM.
3) Check voltage at each terminal.

NOTE

As each terminal voltage is affected by the battery voltage, confirm that it is 11 V or more when the ignition switch is turned to ON position.

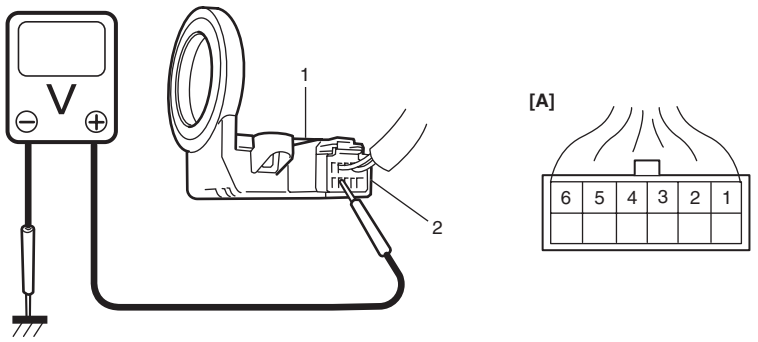

I6RW0BA30003-01

[A]: ICM connector (harness side view)

Terminal	Circuit	Normal Voltage	Condition
G17-1	Power supply	About 12.0 V	Ignition switch at ON position
		0.0 V	Ignition switch at OFF position
G17-2	Ground	0.0 V	—
G17-3	Serial communication line	See the reference waveform.	—
		0.0 V	Ignition switch at OFF position
G17-4	Clock line	See the reference waveform.	—
		0.0 V	Ignition switch at OFF position
G17-5	Illumination ring control (if equipped)	0 V	• Ignition key not inserted to the key cylinder • Door opened
		0 V → 12 V	• Ignition key at OFF position • From the time door is closed to the time interior light faded out completely (As the interior light fades out, the voltage increases.)
		0 V → 12 V	• Door closed • From the ignition switch is turned ON to the time interior light is completely faded out (As the interior light fades out, the voltage increases.)
G17-6	Illumination ring power supply (if equipped)	About 12.0 V	—

Reference Waveform

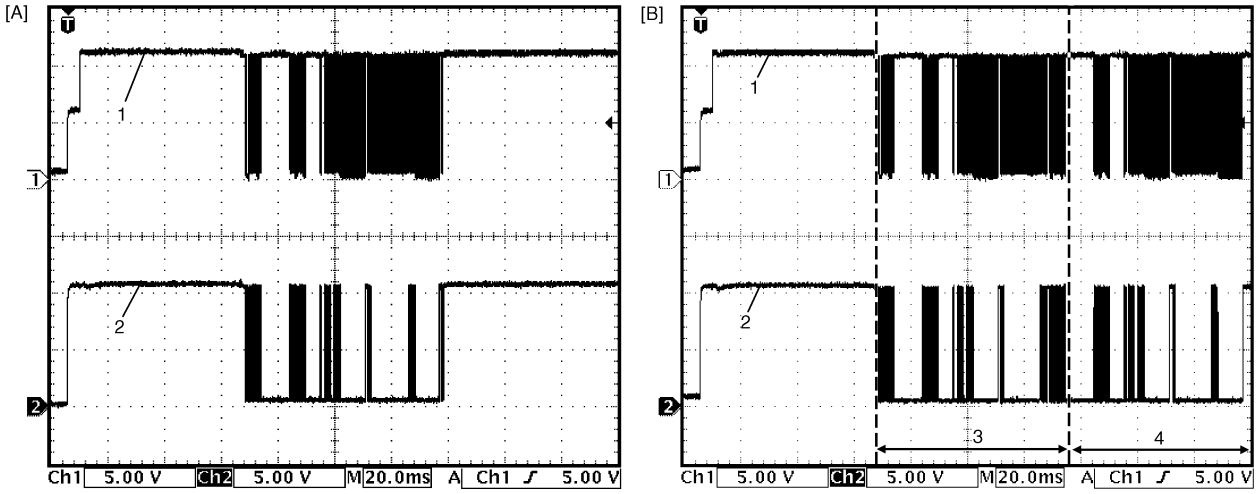

I6RW0CA30003-01

[A]: The transponder code read successfully at the first try.	2. Clock line
[B]: The transponder code read successfully at the second try.	3. First try
1. Serial communication line	4. Second try

NOTE

When ECM cannot read the transponder code at the first try, ECM tries to read the transponder code repeatedly up to 8 times. The second waveform is the example showing that ECM read the transponder code successfully at the second try.

Measurement terminals	CH1: G17-3 to G17-2 CH2: G17-4 to G17-2
Oscilloscope settings	CH1: 5 V/DIV CH2: 5 V/DIV TIME: 20 ms
Measurement condition	Right after the ignition switch is turned ON, the waveform can be read.

Repair Instructions

ICM Removal and Installation

S7RW0AA306001

Removal

1) Disconnect negative (–) cable at battery.
2) Remove dash side trim (4) and steering column hole cover (3).
3) Remove steering column covers (1).
   Turn steering wheel to access steering column cover screws (2).

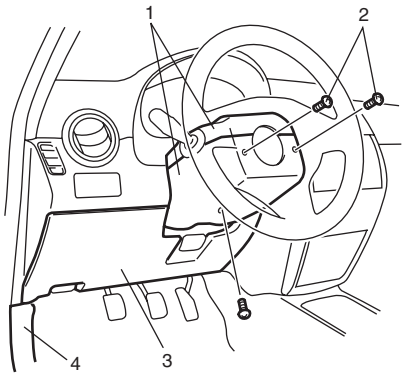

I6RW0BA30004-01

4) Remove engine start knob (keyless start model).
5) Disconnect connector (1) from ICM (2).
6) Remove a screw (3) from ICM.

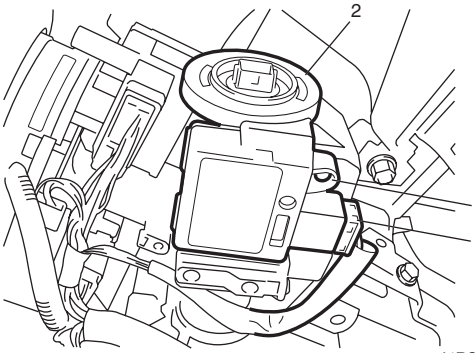

I4RS0BA30007-03

7) Remove ICM from steering lock assembly or steering lock unit.

NOTE

The antenna part of ICM is fragile. Therefore, do not add strong power to the part or twist the part.

Installation

Reverse the removal procedure.

Registration of the Ignition Key

S7RW0AA306002

To finish the registration of the ignition key, the transponder code memorized in the transponder built in the ignition key has to be registered with ECM. To register the transponder code with ECM, perform “Immobilizer Key Registration” mode of SUZUKI scan tool referring to “SUZUKI scan tool Operator’s Manual”.

NOTE

- **A maximum of four transponder codes can be registered with ECM.**
- **At an early part of the registration process, all transponder codes of the ignition keys in use already registered with ECM are cleared. Therefore, before starting the registration, prepare all ignition keys in use in addition to the new ignition key(s) to be registered with ECM.**

Procedure after ECM Replacement

S7RW0AA306003

After ECM is replaced with new one or used one, the transponder code in the transponder built in the ignition key has to be registered with ECM. To register transponder code in the ignition key with ECM, perform “Immobilizer Key Registration” mode of SUZUKI scan tool referring to “SUZUKI scan tool Operator’s Manual”.

NOTE

A maximum of four transponder codes can be registered with ECM.

Special Tools and Equipment

Special Tool

S7RW0AA308001

SUZUKI scan tool (SUZUKI-SDT) — This kit includes following items. 1. SUZUKI-SDT 2. DLC3 cable 3. USB cable 4. AC/DC power supply 5. Voltage meter probe 6. Storage case ☞ / ☞ 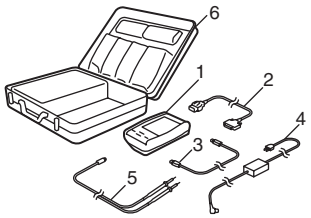	

Keyless Start System

Precautions

Precautions in Diagnosing Troubles

S7RW0AA500002

- The keyless start system executes data transmission/reception by means of the radio wave. Therefore, proper operation may not be obtained if use of the door lock function and engine start function of the keyless start system is attempted near the place where strong radio wave is emitted (TV and radio broadcasting stations, etc.).
- Diagnostic information stored in keyless start control module memory can be checked only by key indicator light.
- Be sure to use the trouble diagnosis procedure as described in “Keyless Start System Check”. Failure to follow it may result in incorrect diagnosis. (Some other DTC may be stored by mistake in the memory of keyless start control module during inspection.)
- Be sure to read “Precautions for Electrical Circuit Service in Section 00” before inspection and observe what is written there.
- Communication of ECM, TCM (A/T model), BCM, ABS or ESP® control module, 4WD control module (if equipped), keyless start control module, steering angle sensor (if equipped), yaw rate/G sensor (if equipped) and combination meter is established by CAN (Controller Area Network). (For detail of CAN communication for keyless start control module, refer to “CAN Communication System Description”). Therefore, handle CAN communication line with care referring to “Precaution for CAN Communication System in Section 00”.
- Replacement of the keyless start control module
  When keyless start control module is replaced with new one, make sure that register remote controller ID code to keyless start control module correctly according to “Registration Procedure for Remote Controller ID Code”.
- Keyless start control module substitution
  When the keyless start control module used in another vehicle was installed in the vehicle being serviced, register the ID code of the remote controller to the keyless start control module first and then the following code.
  - With immobilizer control system, register the ignition key transponder code for the immobilizer control system in ECM. For registration procedure of that, refer to “Registration of the Ignition Key in Section 10C”.
  - Without immobilizer control system, register the steering lock unit ID code in keyless start control module. For registration procedure of that, refer to “Keyless Start Registration”.

General Description

Keyless Start System Description

S7RW0AA501001

Keyless start system consisting of the parts shown below has four functions as described below.

- Keyless engine start function:
  With the remote controller which has been registered in the keyless start control module carried with oneself, the engine can be started without using the ignition key.
- Door lock function:
  Pushing the request switch incorporated in the outside handle of the driver side door, passenger side door or rear end door (Hatchback) while carrying the remote controller which has been registered in the keyless start control module, doors can be locked or unlocked.
- Trunk lid opener function (Sedan):
  Pushing the trunk lid request switch while carrying the remote controller which has been registered in the keyless start control module, trunk lid can be opened.
- Keyless entry system function:
  It is possible to lock or unlock doors by pushing the lock or unlock button of remote controller.

The keyless start control module can accept registration of up to four remote controllers.

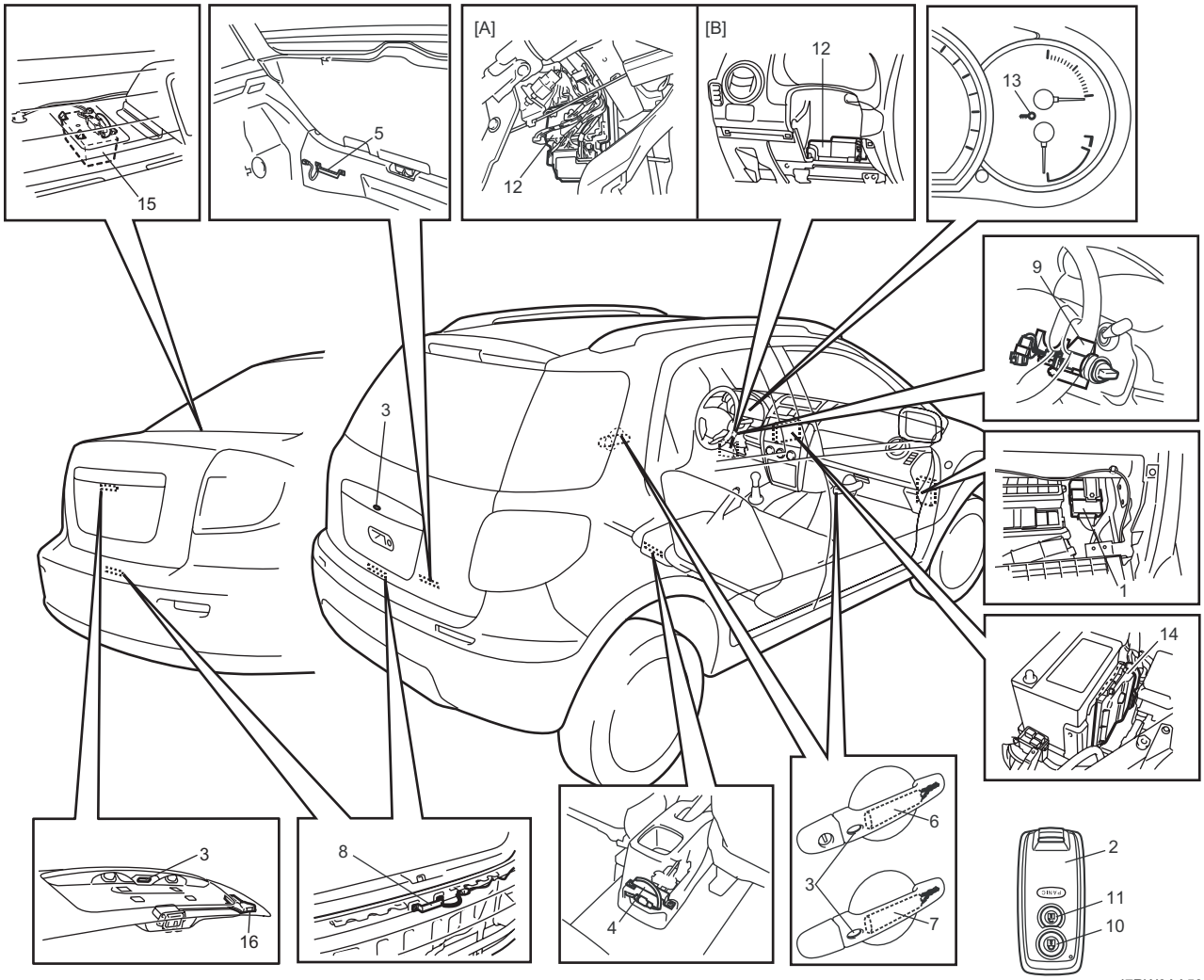

I7RW0AA50001-02

[A]: Junction block with BCM type	5. Luggage room antenna (Hatchback)	11. Unlock button
[B]: Junction block without BCM type	6. Driver side door antenna	12. BCM
1. Keyless start control module	7. Passenger side door antenna	13. Key indicator light
2. Remote controller	8. Rear end door / trunk lid antenna	14. ECM
3. Request switch	9. Steering lock unit	15. Trunk room antenna (Sedan)
4. Center antenna	10. Lock button	16. Trunk lid opener actuator (Sedan)

Parts and Functions

S7RW0AA501002

Parts	Function
Keyless start control module	• Activates each antenna • Verifies ID code of remote controller • Requests steering lock unit to release steering lock • Requests BCM to lock or unlock doors • Requests BCM to open trunk lid (Sedan) • Controls key indicator light in combination meter • Transmits its ID code to ECM
Remote controller	• Receives request signal from each antenna • Transmits ID code and request signal to keyless start control module • Request keyless start control module to lock or unlock doors (keyless entry system function)
Request switch	• Requests keyless start control module to activate each antenna
Center antenna	• Transmits request signal to remote controller
Luggage room / trunk room antenna	• Transmits request signal to remote controller
Driver side door antenna	• Transmits request signal to remote controller
Passenger side door antenna	• Transmits request signal to remote controller
Rear end door / trunk lid antenna	• Transmits request signal to remote controller
Steering lock unit	• Releases steering lock
Unlock button	• Transmits door unlock request signal (keyless entry system function)
Lock button	• Transmits door lock request signal (keyless entry system function)
BCM	• Controls each door lock actuator • Controls trunk lid opener actuator (Sedan) • Controls warning buzzer • Lights hazard warning light and interior (DOME) light (answer back)
Key indicator light	• Indicates operation state of keyless start system (indicates check result of remote controller ID code)
ECM	• Checks keyless start control module ID code • Transmits its ID code to keyless start control module • Starts engine

Keyless Engine Start Function

S7RW0AA501003

When the ignition knob switch (2) installed to the steering lock unit (1) is pushed, the keyless start control module (3) activates the center antenna (4) to send out the request signal in the vehicle compartment. When the remote controller (5) receives the request signal from the center antenna, it transmits the ID code to the keyless start control module. The keyless start control module compares the ID code sent by the remote controller with the ID code registered in the keyless start control module. When these ID codes match, the keyless start control module makes the key indicator light (7) in the combination meter (6) light in blue and unlocks the steering lock unit to enable the ignition knob switch to turn. When the ignition knob switch is turned to ON position in this state, ID codes of ECM and keyless start control module are compared through CAN communication (immobilizer function). When they match, turning the ignition knob switch to start position will start the engine.

NOTE

When ignition knob switch is at ACC or ON position (engine not running) and any door has been kept open for a certain time, it may happen that engine fails to start. In such a case, turn ignition knob switch to OFF position once and then try to start engine again.

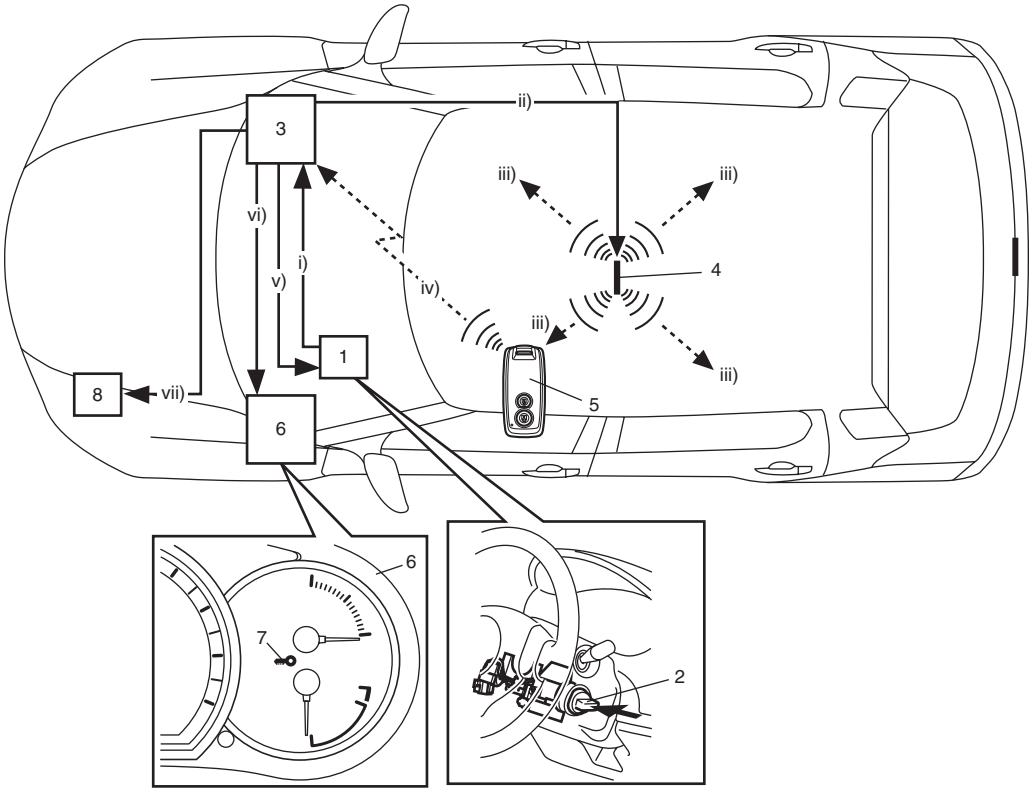

[A]: i) ~ vii)

I5RW0AA50002-03

[A]: Signal flow	8. ECM

When the ID code from the remote controller and the ID code registered in the keyless start control module do not match or when the remote controller is outside the operation area of the remote controller and the ignition knob switch is pushed, the steering lock unit cannot be unlocked and so the ignition knob switch cannot be turned. Then, the keyless start control module makes the key indicator light in the combination meter light in red to warn the driver that it is not possible to turn the ignition knob switch.

In case of vehicle equipped with immobilizer control system, when the ID code of ECM and that of the keyless start control module do not match, the engine cannot be started even if the ignition knob switch is turned to the start position. Then ECM makes the immobilizer indicator light in the combination meter flash to warn the driver that it is not possible to start the engine.

Door Lock Function of Keyless Start System

S7RW0AA501004

When the request switch (1) incorporated in the outside handle of the driver side door, front passenger side door or rear end door (Hatchback) is pushed, the keyless start control module (2) activates the center antenna (3) and luggage room antenna (4) (Hatchback) or trunk room antenna (10) (Sedan) to send out the radio wave in the vehicle compartment to check if the remote controller (5) is in the vehicle compartment or not. When the keyless start control module receives no signal from the remote controller (i.e., the remote controller does not exist in the vehicle compartment), it activates the antenna (6) of the door of which the request switch has been pushed to send the request signal out of the compartment.

If the remote controller exists within the door lock operation area, it receives the request signal sent from the above said antenna, sends the ID code of the remote controller and the request signal to the keyless start control module and at the same time, it makes the operation indicator light (7) of the remote controller light up. Lighting of the operation indicator light indicates that the remote controller sent the ID code and the request signal.

The keyless start control module compares the ID code sent from the remote controller with the ID code registered in the keyless start control module. If both ID codes match, the keyless start control module outputs the lock or unlock request signal (depending on the door lock switch (8) state then) to BCM (9). When BCM receives such signal through CAN communication from the keyless start control module, it activates the door lock actuator to lock or unlock doors.

When the keyless start control module receives a signal from the remote controller (i.e., the remote controller exists in the vehicle compartment), the function of the keyless start system to prevent the remote controller from being closed in the vehicle works and the keyless start control module sends a request signal to unlock doors to BCM. In this way, doors are kept unlocked.

Also, when the driver or passenger has left the vehicle with the remote controller left behind in the vehicle compartment and locked doors by using the door lock knob or manual door lock switch, the function to prevent the remote controller from being closed in the vehicle works to unlock doors.

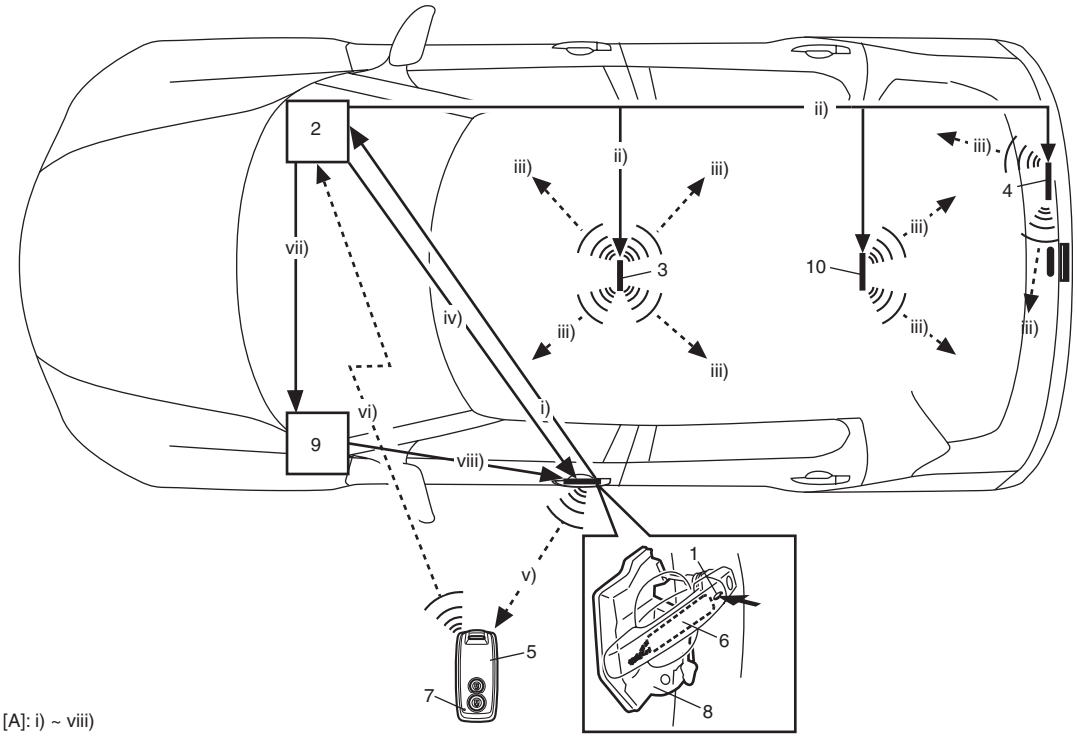

I6RW0BA50002-01

[A]: Signal flow

Furthermore, when ID codes of the remote controller and keyless start control module do not match or the remote controller exists outside of the operation area, doors are not locked or unlocked even if the request switch of the outside handle is operated.

Trunk Lid Opener Function of Keyless Start System (Sedan)

S7RW0AA501008

When the trunk lid request switch (1) is pushed, the keyless start control module (2) activates the trunk room antenna (3) to send out the radio wave in the trunk room to check if the remote controller (4) is in the trunk room or not. When the keyless start control module receives no signal from the remote controller (i.e., the remote controller does not exist in the trunk room), it activates the trunk lid antenna (5) to send the request signal out of the compartment.
If the remote controller exists within the trunk lid opener operation area, it receives the request signal sent from the trunk lid antenna, sends the ID code of the remote controller and the request signal to the keyless start control module and at the same time, it makes the operation indicator light (6) of the remote controller light up. Lighting of the operation indicator light indicates that the remote controller sent the ID code and the request signal.
The keyless start control module compares the ID code sent from the remote controller with the ID code registered in the keyless start control module. If both ID codes match, the keyless start control module outputs the trunk lid open request signal to BCM (7). When BCM receives such signal through CAN communication from the keyless start control module, it activates the trunk lid opener actuator (8) to open trunk lid.
When the trunk lid is closed while the front driver side and/or front passenger side door lock is at the lock position and all doors are closed, the keyless start control module activates the trunk room antenna to send the radio wave in the trunk room so as to check whether the remote controller is in the trunk room or not. When the keyless start control module receives a signal from the remote controller (i.e., the remote controller exists in the trunk room), the function the keyless start system to prevent the remote controller from being closed in the trunk room and the keyless start control module sends a trunk lid open request signal to open trunk lid to BCM. In this way, trunk lid is kept opened.

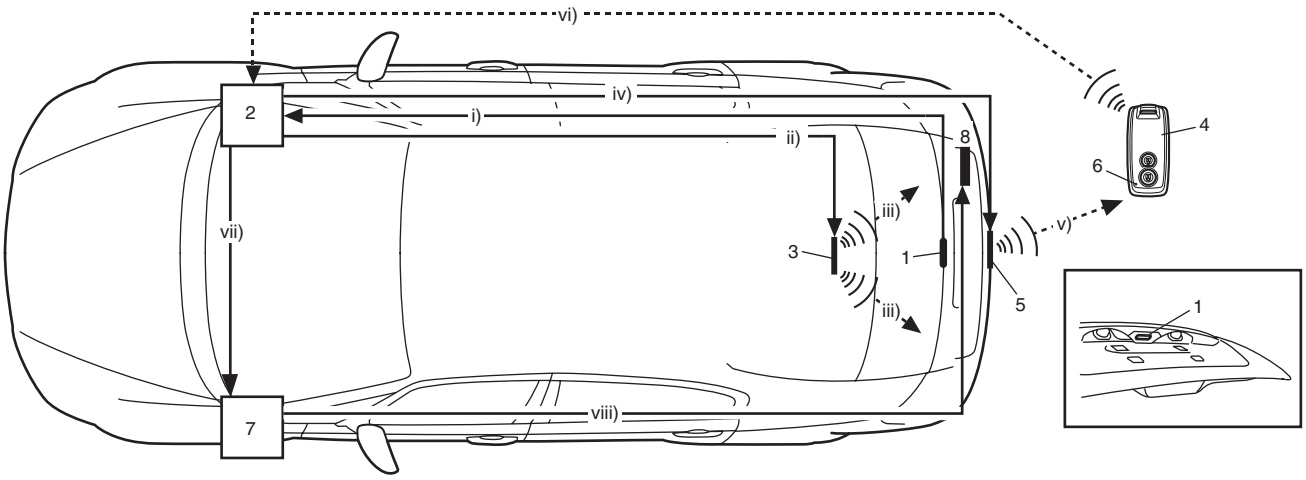

I6RW0BA50003-01

[A]: Signal flow

Furthermore, when ID codes of the remote controller and keyless start control module do not match or the remote controller exists outside of the operation area, trunk lid is not opened even if the trunk lid request switch is operated.

Operation Area of Remote Controller

S7RW0AA501005

Shown below are the operation areas of the remote controller for the keyless engine start function, door lock function and trunk lid opener function (Sedan) of the keyless start system.

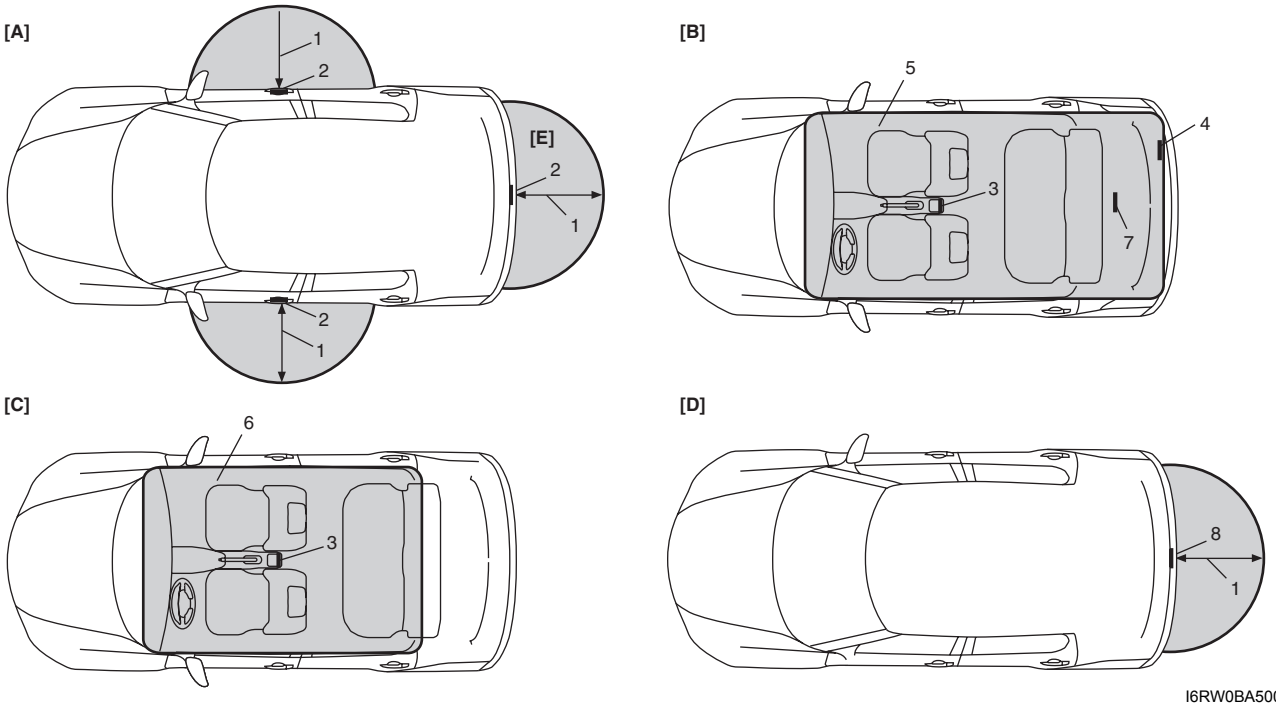

I6RW0BA50004-02

[A]: Door lock function of keyless start system	3. Center antenna
[B]: Function of keyless start system to prevent remote controller from being closed in vehicle compartment	4. Luggage room antenna
[C]: Keyless engine start function	5. Vehicle compartment including luggage room / trunk room
[D]: Trunk lid opener function of keyless start system (Sedan)	6. Vehicle compartment excluding luggage room / trunk room
[E]: Hatchback	7. Trunk room antenna
1. About 80 cm (31.5 in, 2.6 ft)	8. Trunk lid antenna
2. Each door antenna	

However, even when the remote controller is within the operation area as shown above, there are cases where the keyless start system doesn't work under certain conditions as described below. And when the keyless engine start function doesn't work, the key indicator light in the combination meter may light up.

- Doors cannot be locked or unlocked using the door lock function of keyless start system when:
  - The remote controller which has been registered in the keyless start control module and another un-registered one are both carried at the same time
  - The remote controller is kept in some metallic container which disturb radio wave transmission/reception
  - One of doors is open
  - The ignition key is inserted in the ignition key cylinder
- Trunk lid cannot be opened using the trunk lid opener function of keyless start system when:
  - The remote controller which has been registered in the keyless start control module and another un-registered one are both carried at the same time
  - The remote controller is kept in some metallic container which disturb radio wave transmission/reception
- The function of the keyless start system to prevent the remote controller from being closed in the vehicle compartment doesn't work when:
  - The remote controller is in the door pocket or in the glove box
  - The remote controller is kept in some metallic container which disturb radio wave transmission/reception
  - The remote controller is placed close to outside of the vehicle compartment (such as on the instrument panel beside the front window shield glass, on the rear parcel shelf (partition trim) or in a corner of the luggage room / trunk room)

- The ignition knob switch cannot be turned using the keyless engine start function fails to turn:
  - The remote controller which has been registered in the keyless start control module and another un-registered one are both carried at the same time
  - The remote controller is kept in some metallic container which disturbs radio wave transmission/reception
  - The ignition knob switch has been pushed for 5 seconds or longer
  - The remote controller is placed close to outside of the vehicle compartment (such as on the instrument panel beside the front window shield glass, on the rear parcel shelf (partition trim) or in a corner of the luggage room / trunk room)

Alarm Function

S7RW0AA501006

Under conditions as described in the table below, the keyless start control module makes the key indicator light flash in red and the buzzer sound to call the driver's attention.

Condition	Buzzer operation	Key indicator light operation
Ignition knob switch has stopped between ACC and OFF positions while driver side door is opened (ignition knob switch un-returned alarm)	Intermittent	—
Ignition switch has stopped between ACC and OFF positions while driver side door is closed (ignition knob switch un-returned alarm)	2 times	Flashing in red
Remote controller is carried out of vehicle and doors are closed while ignition switch is at ON position (remote controller carried-out alarm)	5 times	Flashing in red
Remote controller is carried out of vehicle through a window without opening door while ignition switch is at ON position (engine is running) and vehicle has been driven at 10km/h (6 MPH) or more speed without remote controller in vehicle compartment (the first time 10 km/h (6 MPH) speed is exceeded only) (Remote controller carried-out alarm)	5 times	Flashing in red

CAN Communication System Description

S7RW0AA501007

Refer to "CAN Communication System Description in Section 1A" for CAN communication system description. Keyless start control module communicates control data with each control module as follows.

Keyless Start Control Module Transmission Data

				ECM	BCM	Combination Meter
Keyless Start Control Module	Transmit	DATA	ID code of keyless start control module	○		
			ECM-keyless start control module code	○		
			Ignition knob switch signal		○	
			Door lock/unlock request signal		○	
			Buzzer request signal		○	
			Answer back request signal		○	
			Panic alarm request signal		○	
			Trunk lid opener request signal		○	
			Key indicator light control signal			○

I8RW01A50002-01

Keyless Start Control Module Reception Data

				ECM	BCM
Keyless Start Control Module	Receive	DATA	Vehicle speed signal	○	
			ECM-keyless start control module code	○	
			Door switch status		○
			Trunk lid switch status		○
			Door lock status		○
			Charing system signal		○
			Engine oil pressure switch signal		○

I6RW0BA50006-01

Schematic and Routing Diagram

Keyless Start System Electric Wiring Circuit Diagram

S7RW0AA502001

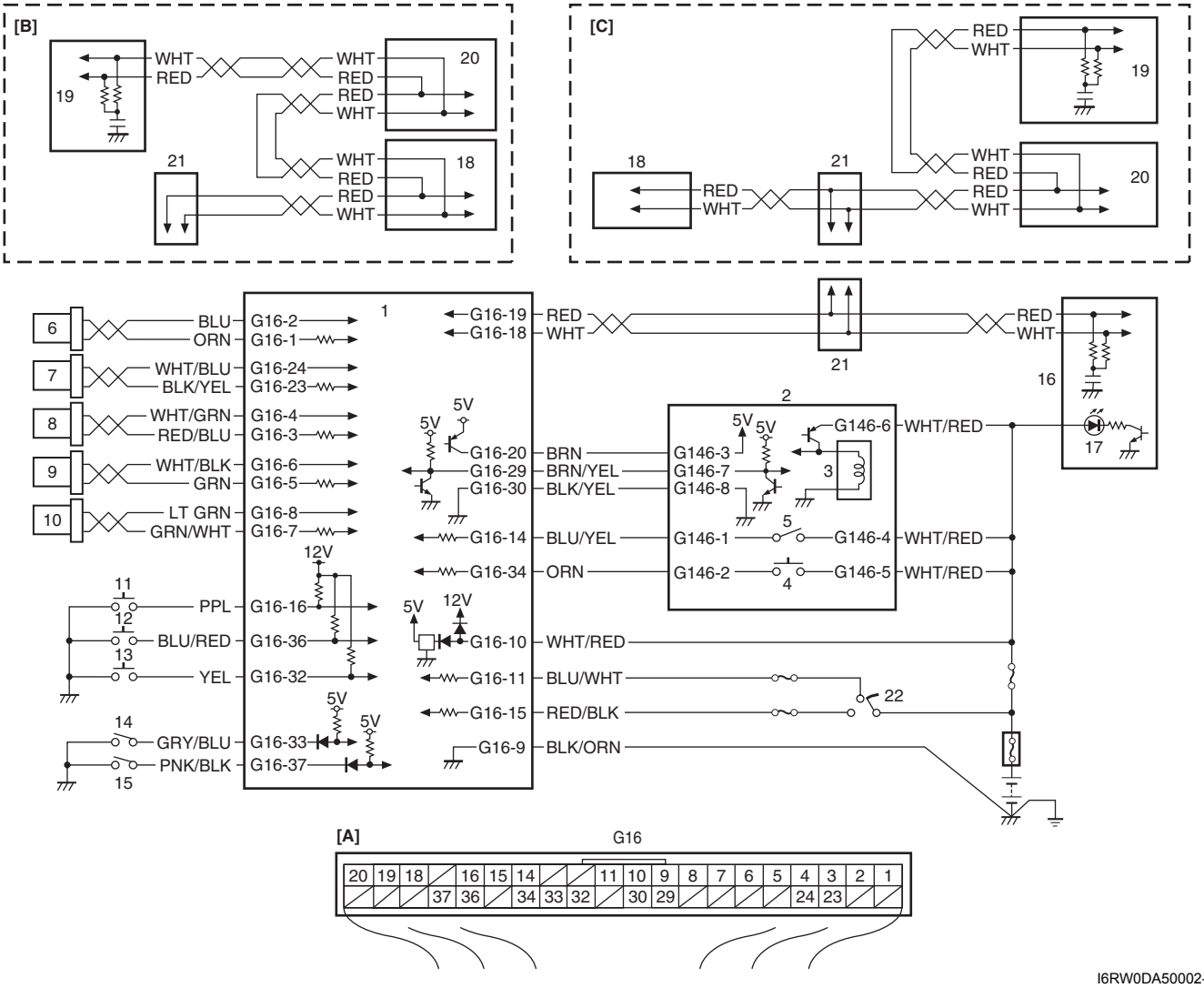

I6RW0DA50002-01

[A]: Keyless start control module connector (viewed from harness side)	7. Passenger side door antenna	16. Combination meter
[B]: Junction block with BCM type	8. Rear end door / trunk lid antenna	17. Key indicator light
[C]: Junction block without BCM type	9. Center antenna	18. BCM
1. Keyless start control module	10. Luggage room / trunk room antenna	19. ECM
2. Steering Lock unit	11. Driver side door request switch	20. ABS or ESP® control module
3. Steering lock solenoid	12. Passenger side door request switch	21. CAN junction connector
4. Ignition knob switch	13. Rear end door / trunk lid request switch	22. Ignition Switch

5. Key reminder switch	14. Driver side door lock switch	
6. Driver side door antenna	15. Passenger side door lock switch	

Diagnostic Information and Procedures

Self-Diagnosis Function

S7RW0AA504002

The keyless start control module has self-diagnosis function to monitor the system components and circuits while the keyless start system is at work. When the keyless start control module detects an abnormality in the system, it saves the area where such abnormality has occurred as a DTC in its memory. The DTC stored in memory of the keyless start control module is indicated by the key indicator light in the combination meter flashing in a specific pattern. For DTC indication, refer to “DTC Check” and for the clearing procedure, to “DTC Clearance”.

Keyless Start System Diagnosis Introduction

S7RW0AA504003

To ensure that the trouble diagnosis is done accurately and smoothly, observe “Precautions in Diagnosing Troubles” and follow “Keyless Start System Check”.

Keyless Start System Check

S7RW0AA504004

Step	Action	Yes	No
1	1) Record details of the problem. For your record, use of a questionnaire form will facilitate collecting information for proper analysis and diagnosis. 2) Check if the problem described in “Customer Questionnaire (Example)” actually occurs in the vehicle. (This step should be performed with the customer if possible.) Perform “Keyless Start System Operation Inspection” procedure to check if the symptom which has occurred is abnormal or not. 3) Check for DTC referring to “DTC Check”, and then record DTC(s). 4) Clear DTC referring to “DTC Clearance” if any DTC exists, and then recheck for DTC. *Is any DTC still detected?*	Go to Step 2.	Go to Step 3.
2	1) Check and repair referring to applicable “DTC Table”. *Are check and repair complete?*	Go to Step 5.	Check and repair malfunction part(s), and go to Step 5.
3	1) Inspect and repair basic parts referring to “Keyless Start System Symptom Diagnosis”. *Is there faulty condition?*	Repair or replace malfunction part(s), and go to Step 5.	Go to Step 4.
4	1) Check for intermittent problems referring to “Intermittent and Poor Connection Inspection in Section 00”. *Is there any faulty condition?*	Repair or replace malfunction part(s), and go to Step 5.	Go to Step 5.
5	1) Confirm if the problem is solved and the keyless start system is free from any abnormal conditions. If what has been repaired is related to the DTC, clear the DTC once and then confirm that no DTC is indicated. *Is there any problem symptom, DTC or abnormal condition?*	Go to 2) of Step 1 and perform trouble diagnosis again.	End.

Customer Questionnaire (Example)

S7RW0AA504005

Customer's name:	Model:	VIN:	
Date of issue:	Date Reg:	Date of problem:	Mileage:

Problem Symptoms	・ Engine can not be started by turning Ignition knob switch ・ All doors can not be locked / unlocked by all of request switches ・ Other_____
Frequency of Occurrence	・Continuous / Intermittent (times a day, a month) / Other_____
Environmental Condition	・ Weather: Fine / Cloudy / Rain / Snow / Other_____ ・ Temperature: ℃(° F) ・ Stopping near area where intense radio waves are emitted such as TV station, radio station, etc. Yes / No
Diagnostic Trouble Code	・ First check: Normal code / malfunction code ( ) ・ Second check: Normal code / malfunction code ( )

I4RS0BA50007-03

Key Indicator Light Check

S7RW0AA504006

Push the ignition knob switch (2) of the steering lock unit (1) and check that the key indicator light (3) in the combination meter lights up in red or blue. If it does not light, go to "Key Indicator Light Circuit Check (Key Indicator Light Doesn't Light when Ignition Knob Switch is Pushed)".

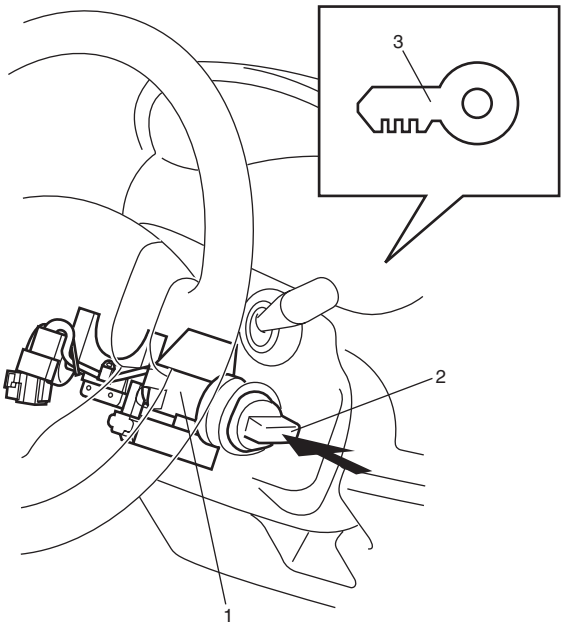

I4RS0BA50008-01

DTC Check

S7RW0AA504007

1) Check to make sure that all doors are closed.
2) Open driver side door window glass and door.
3) Check to make sure that ignition key is not inserted in ignition key cylinder. If it is, remove it.
4) Perform “Key Indicator Light Check”.
5) Close driver side door and within 15 seconds after that, perform Steps a) through e) described below.
   a) Insert ignition key (1) in ignition key cylinder (2).
   b) Remove ignition key from ignition key cylinder.
   c) Repeat Steps a) and b) twice.
   d) Insert ignition key in ignition key cylinder.
   e) Push driver side door request switch (3) 4 times. At the end of Step e), buzzer sounds 4 times to inform that trouble diagnosis mode has started.

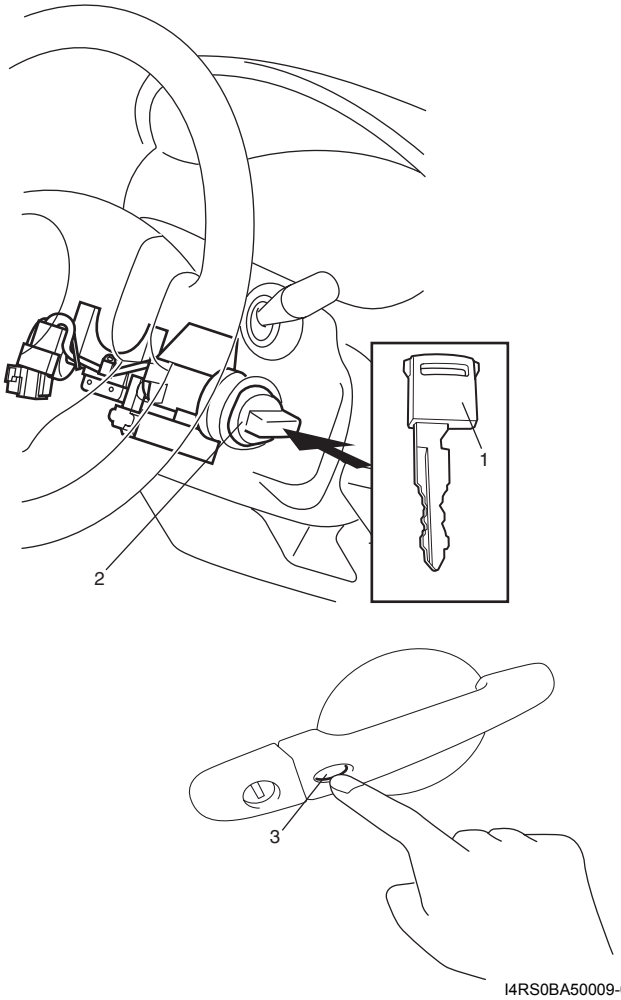

I4RS0BA50009-02

6) Read flashing pattern of key indicator light (1) which represents DTC as shown in example below and write it down. When more than 2 DTCs are stored in memory, flashing for each DTC is repeated three times starting with the smallest DTC number in increasing order.

NOTE

Go to “No DTC Detection After Performing DTC Check” in case that any DTC is detected after performing the procedure mentioned above.

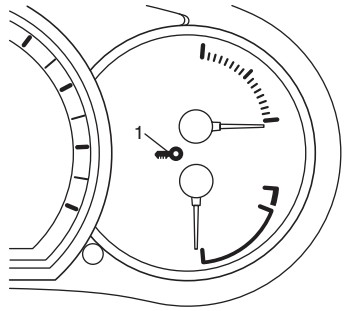

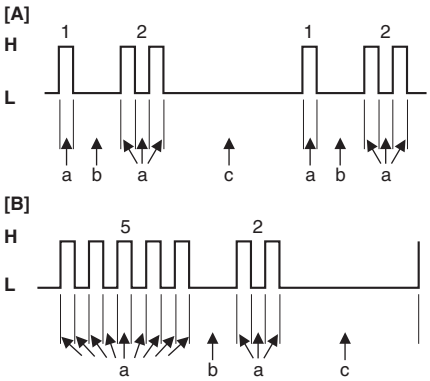

I4RS0BA50010-02

[A]: DTC No. 12 (Normal)	a: 0.3 seconds
[B]: DTC No. 52	b: 1.0 second
H: Key indicator light turned ON	c: 3.0 seconds
L: Key indicator light turned OFF	

7) After completing the check, remove ignition key from ignition key cylinder.

DTC Table

S7RW0AA504008

DTC (Flashing pattern of key indicator light)	Detected parts item	Detecting condition
☞ 11	Communication Error with Steering Lock Unit	No communication is available between keyless start control module and steering lock unit
12	—	Normal (No malfunction DTC is detected)
☞ 13	Release Signal Error from Steering Lock Unit	Although lock release signal is output to steering lock unit, it is not inputted from steering lock unit
☞ 14	Steering Lock Unit Malfunction	Steering lock unit cannot be unlocked due to its temperature rise
☞ 21	Internal Error in Keyless Start Control Module (EEPROM Reading Error)	Data cannot be read from memory in keyless start control module
☞ 22	Internal Error in Keyless Start Control Module (EEPROM Writing Error)	Data cannot be written into memory in keyless start control module
☞ 31	Lost Communication with BCM	Keyless start control module cannot receive data sent by CAN from BCM
☞ 33	Control Module Communication Bus Off	No communication is available with all control modules connected by CAN
☞ 51	Driver Side Door Request Switch Malfunction	Input signal from driver side door request switch remains ON, unchanged
☞ 52	Passenger Side Door Request Switch Malfunction	Input signal from passenger side door request switch remains ON, unchanged
☞ 53	Rear End Door / trunk Lid Request Switch Malfunction	Input signal from rear end door / trunk lid request switch remains ON, unchanged

DTC Clearance

S7RW0AA504009

1) Perform Steps 1) through 5) of DTC check procedure and have DTC indicated.
2) Open driver side door.
3) Close driver side door and within 10 seconds after that, perform Steps a) to c) described below.
   a) Push unlock side (3) of driver side manual door lock switch (1).
   b) Push lock side (2) of driver side manual door lock switch.
   c) Repeat Steps a) and b) 3 times.
   At the end of Step c), DTCs are cleared and key indicator light indicates DTC No. 12 (Normal).

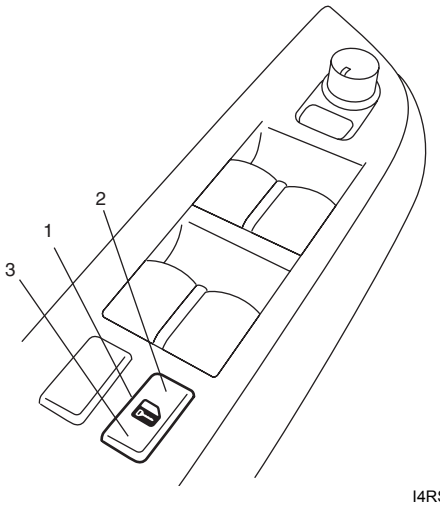

I4RS0BA50011-02

4) After completing DTC clearance, remove ignition key from ignition key cylinder.

Keyless Start System Symptom Diagnosis

S7RW0AA504010

Door Lock Function of Keyless Start System

NOTE

Before performing trouble diagnosis procedure for door lock function of keyless start system, check that power door lock system operates properly referring to "Power Door Lock System Operation Inspection in Section 9F". If power door lock system does not operate properly, go to "Power Door Lock System Symptom Diagnosis in Section 9F".

Condition	Possible cause	Correction / Reference Item
All doors can not be locked / unlocked by all of door request switches	Circuit fuse(s) blown	*Replace fuse(s) and check for short circuit.*
	Remote controller battery dead	*Replace battery.*
	Remote controller faulty	*Check remote controller for operation referring to "Remote Controller Inspection".*
	Wiring or grounding faulty	*Repair circuit.*
	Antennas or keyless start control module faulty	*Check input and output signals of keyless start control module referring to "Inspection of Keyless Start Control Module and Its Circuits".*
	BCM faulty	*Check input and output signal of BCM referring to "Inspection of BCM and Its Circuits in Section 10B".*
All doors can not be locked / unlocked by any one of door request switch	Request switch faulty	*Check request switch for operation referring to "Front Door (Driver and Passenger Side), Rear End Door / Trunk Lid Request Switch Inspection".*
	Wiring or grounding faulty	*Repair circuit.*
	Antennas or keyless start control module faulty	*Check input and output signals of keyless start control module referring to "Inspection of Keyless Start Control Module and Its Circuits".*
	BCM faulty	*Check input and output signal of BCM referring to "Inspection of BCM and Its Circuits in Section 10B".*

Trunk Lid Opener Function of Keyless Start System (Sedan)

NOTE

- **Use of SUZUKI scan tool makes it easy to check whether a faulty condition is on the input side or output side of BCM. For checking procedure, refer to "Diagnosis Using Output Test Function of SUZUKI Scan Tool" under "Scan Tool Data in Section 10B".**
- **Check each part in the order from the top of the following list.**

Condition	Possible cause	Correction / Reference Item
Trunk lid can not be opened by trunk lid request switch	Circuit fuse(s) blown	*Replace fuse(s) and check for short circuit.*
	Remote controller battery dead	*Replace battery.*
	Remote controller faulty	*Check remote controller for operation referring to "Remote Controller Inspection".*
	Request switch faulty	*Check request switch for operation referring to "Front Door (Driver and Passenger Side), Rear End Door / Trunk Lid Request Switch Inspection".*
	Trunk lid opener actuator faulty	*Check trunk lid opener actuator operation referring to "Power Door Lock Actuator Inspection in Section 9F".*
	Wiring or grounding faulty	*Repair circuit.*
	Antennas or keyless start control module faulty	*Check input and output signals of keyless start control module referring to "Inspection of Keyless Start Control Module and Its Circuits".*
	BCM faulty	*Check input and output signal of BCM referring to "Inspection of BCM and Its Circuits in Section 10B".*

Keyless Engine Start Function

NOTE

Before performing symptom diagnosis procedure for keyless engine start system, check that engine starts by using ignition key. If it cannot be started by using ignition key, go to "Engine Symptom Diagnosis in Section 1A".

Condition	Possible cause	Correction / Reference Item
Engine can not be started by turning Ignition knob switch	Circuit fuse(s) blown	*Replace fuse(s) and check for short circuit.*
	Remote controller battery dead	*Replace battery.*
	Remote controller faulty	*Check remote controller for operation referring to "Remote Controller Inspection".*
	Steering lock unit faulty	*Check steering lock unit for operation referring to "Steering Lock Unit Inspection".*
	Wiring or grounding faulty	*Repair circuit.*
	Antennas or keyless start control module faulty	*Check input and output signals of keyless start control module referring to "Inspection of Keyless Start Control Module and Its Circuits".*
	ECM faulty	*Check input and output signal of ECM referring to "Inspection of ECM and Its Circuits in Section 1A".*

Keyless Start System Operation Inspection

S7RW0AA504011

Keyless Engine Start Operation

1) Sit in driver seat with remote controller carried with you.
2) Check that all doors are closed and ignition key is not inserted in ignition key cylinder.
3) While pushing ignition knob switch (1) of steering lock unit, check if ignition knob switch can be turned from its lock position.
   If key indicator light (2) in combination meter lights in blue and ignition knob switch can be turned from its lock position in this check, keyless engine start operation is in good condition.
   If key indicator light in combination meter lights in red and ignition knob switch cannot be turned from its lock position in this check, go to “Keyless Start System Check”.

NOTE

Pushing ignition knob switch for 5 seconds or longer causes function to protect steering lock releasing solenoid against heat to work. Then steering lock unit stops energizing solenoid, preventing ignition knob switch from turning. At the same time, key indicator light in combination meter turns off. In such case, take your hand off from ignition knob switch once and operate it again.

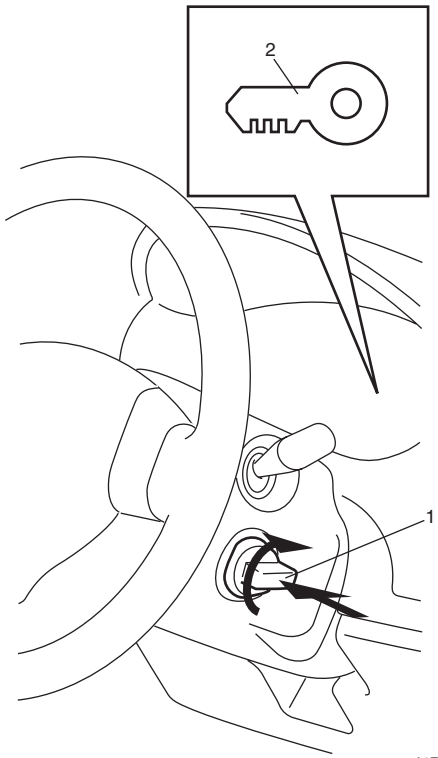

I4RS0BA50012-01

Door Lock Operation (Keyless Start System)

S7RW0AA504012

1) Check that all door locks are released and all doors are closed.
2) With remote controller of which ID code is registered in keyless start control module carried with yourself, check that pushing driver door request switch once locks all doors.
3) Check that pushing request switch of driver door, passenger door or rear end door (Hatchback) once releases corresponding door lock.
4) Check that pushing again request switch pushed in Step 3) releases all door locks.

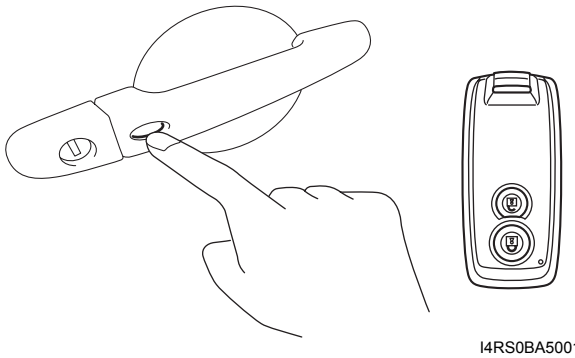

I4RS0BA50013-01

NOTE

If door of which request switch has been pushed is opened/closed before performing Step 4), all door locks will not be released even when Step 4) is performed. If Step 4) is performed after door is opened/closed, only the door of which request switch was pushed will be locked.

Inspection of Keyless Start Control Module and Its Circuits

S7RW0AA504013

Keyless start control module and its circuits can be checked at keyless start control module wiring couplers by measuring voltage and resistance.

⚠ CAUTION

Keyless start control module cannot be checked by itself. It is strictly prohibited to connect voltmeter or ohmmeter to keyless start control module with coupler disconnected from it.

Voltage Check

1) Disconnect negative cable (–) at battery.
2) Remove keyless start control module from vehicle body referring to “Keyless Start Control Module Removal and Installation”.
3) Connect connector to keyless start control module.
4) Check voltage at each terminal number of couplers connected.

NOTE

- **As each terminal voltage is affected by the battery voltage, confirm that it is 11 V or more when ignition switch is ON.**
- **Voltage with asterisk (*) cannot be measured by voltmeter because it is pulse signal.**

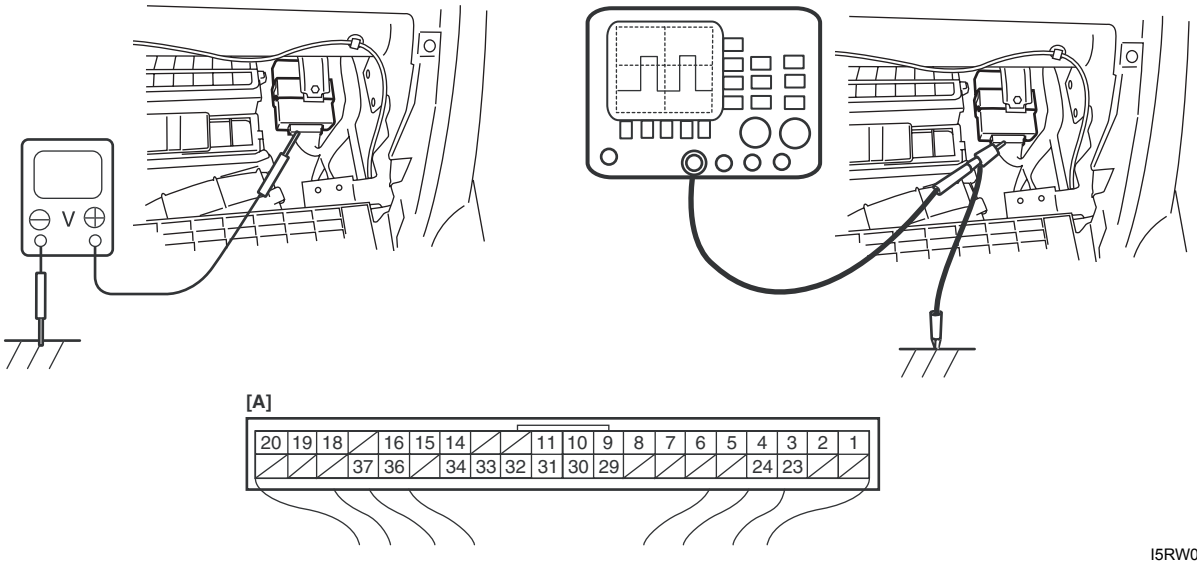

[A]: Keyless start control module connector (viewed from harness side)

Terminal Number	Circuit	Normal Voltage	Condition
G16-1	Driver side door antenna (–)	*0 – 5 V	Refer to “Reference waveform No. 1: ”
G16-2	Driver side door antenna (+)		
G16-3	Rear end door / trunk lid antenna (–)	*0 – 5 V	Refer to “Reference waveform No. 1: ”
G16-4	Rear end door / trunk lid antenna (+)		
G16-5	Center antenna (–)	*–2 – 2 V	Refer to “Reference waveform No. 2: ”
G16-6	Center antenna (+)	*–10 – 15 V	
G16-7	Luggage room / trunk room antenna (–)	*–10 – 10 V	Refer to “Reference waveform No. 3: ”
G16-8	Luggage room / trunk room antenna (+)	*–8 – 14 V	
G16-9	Ground for keyless start control module	0 – 1 V	Ignition switch is at all positions
G16-10	Power source	10 – 12 V	Ignition switch is at all positions
G16-11	Ignition switch (ACC signal)	10 – 12 V	Ignition switch is at ACC or ON position
		0 – 1 V	Ignition switch is at any position other than ACC or ON position
G16-12	—	—	—
G16-13	—	—	—
G16-14	Ignition switch (key reminder signal)	10 – 12 V	Insert ignition key to ignition key cylinder
		0 – 1 V	Pull out ignition key from ignition key cylinder
G16-15	Ignition switch (ON signal)	10 – 12 V	Ignition switch is at ON position
		0 – 1 V	Ignition switch is at any position other than ON position
G16-16	Driver side door request switch	10 – 12 V	Request switch of driver side door is released
		0 – 1 V	Request switch of driver side door is pushed
G16-17	—	—	—

Terminal Number	Circuit	Normal Voltage	Condition
G16-18	CAN communication line (low)	*1.6 – 2.5 V	Refer to “Reference waveform No. 4: ”
G16-19	CAN communication line (high)	*2.5 – 3.6 V	
G16-20	Power supply for steering lock unit	4 – 6 V	Full time
G16-21	—	—	—
G16-22	—	—	—
G16-23	Passenger side door antenna (–)	*0 – 5 V	Refer to “Reference waveform No. 1: ”
G16-24	Passenger side door antenna (+)		
G16-25	—	—	—
G16-26	—	—	—
G16-27	—	—	—
G16-28	—	—	—
G16-29	Signal for steering lock unit	4 – 6 V	Ignition knob switch is at any position other than ON and OFF position
		*0 – 5 V	Refer to “Reference waveform No. 5: ”
G16-30	Ground for steering lock unit	0 – 1 V	Full time
G16-31	—	—	—
G16-32	Rear end door / trunk lid request switch	10 – 12 V	Request switch of rear end door / trunk lid is released
		0 – 1 V	Request switch of rear end door / trunk lid is pushed
G16-33	Driver side door lock switch	0 – 1 V	Driver side door is at unlock position and passenger side door is at lock position
		4 – 6 V	Driver and passenger side door is at lock position
		*3 – 5 V	Refer to “Reference waveform No. 6: ”
G16-34	Ignition knob switch	10 – 12 V	When pushing ignition knob switch of steering lock unit
		0 – 1 V	When releasing ignition knob switch of steering lock unit
G16-35	—	—	—
G16-36	Passenger side door request switch	10 – 12 V	Request switch of passenger side door is released
		0 – 1 V	Request switch of passenger side door is pushed
G16-37	Passenger side door lock switch	0 – 1 V	Passenger side door is at unlock position and driver side door is at lock position
		4 – 6 V	Driver and passenger side door is at lock position
		*3 – 5 V	Refer to “Reference waveform No. 6: ”
G16-38	—	—	—
G16-39	—	—	—
G16-40	—	—	—

Reference waveform No. 1

Driver, passenger and rear end door / trunk lid antenna request signals (Request signal (1) transmitted by each door antenna when each door request switch is pushed)

Measurement terminal	Driver side door antenna • CH1: “G16-2” to “G16-9” • CH2: “G16-1” to “G16-9” Passenger side door antenna • CH1: “G16-24” to “G16-9” • CH2: “G16-23” to “G16-9” Rear end door / trunk lid antenna • CH1: “G16-4” to “G16-9” • CH2: “G16-3” to “G16-9”
Oscilloscope setting	CH1: 5 V/DIV, CH2: 5V/DIV TIME: 40 ms/DIV
Measurement condition	Request switch of each door is pushed with remote controller carried

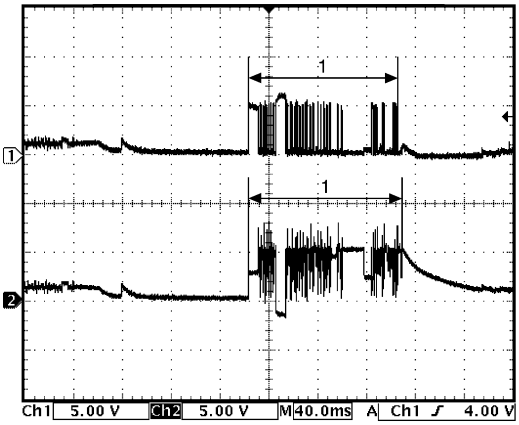

I4RS0BA50015-02

Reference waveform No. 2

Center antenna signal

(Request signal (1) transmitted by center antenna when each door request switch is pushed)

Measurement terminal	CH1: “G16-6” to “G16-9” CH2: “G16-5” to “G16-9”
Oscilloscope setting	CH1: 10 V/DIV, CH2: 2 V/DIV TIME: 20 ms/DIV
Measurement condition	• Ignition knob switch of steering lock unit is pushed • Request switch of each door is pushed with remote controller carried

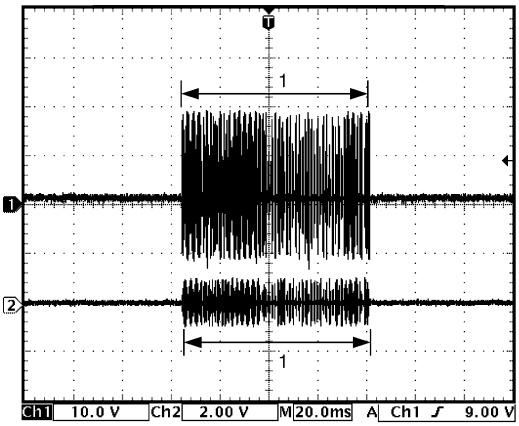

I5JB0AA50024-03

Reference waveform No. 3

Luggage room / trunk room antenna signal

(Request signal (1) transmitted by luggage room / trunk room antenna when each door request switch is pushed)

Measurement terminal	CH1: “G16-8” to “G16-9” CH2: “G16-7” to “G16-9”
Oscilloscope setting	CH1: 10 V/DIV, CH2: 10 V/DIV TIME: 20 ms/DIV
Measurement condition	• Request switch of each door is pushed with remote controller carried

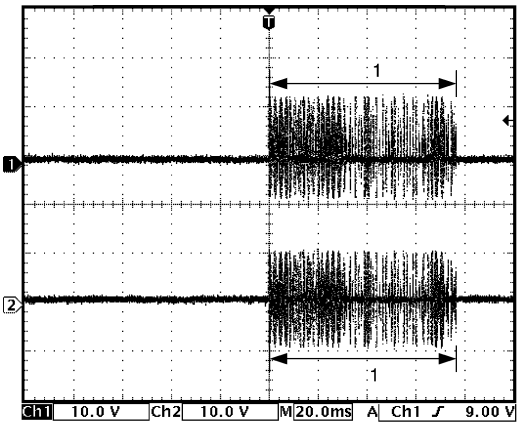

I5JB0AA50025-02

Reference waveform No. 4
CAN communication signals
(CAN signal communicated to each control module when ignition switch is turned ON)

Measurement terminal	CH1: “G16-19” to “G16-9” CH2: “G16-18” to “G16-9”
Oscilloscope setting	CH1: 1 V/DIV, CH2: 1V/DIV TIME: 40 μs/DIV
Measurement condition	Ignition switch is at ON position

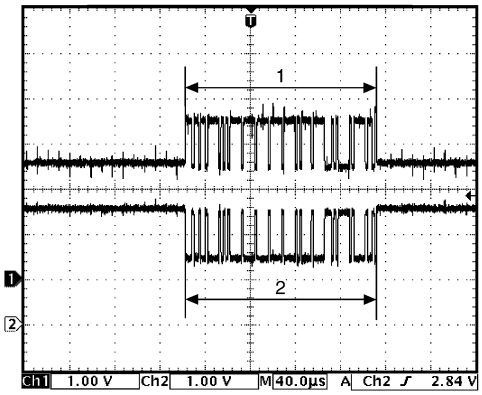

I5RS0DA50002-01

1. CAN communication line signal (high)	
2. CAN communication line signal (low)	

Reference waveform No. 5
Steering lock unit signal
(Signal (1) communicated between keyless start control module and steering lock unit when measurement condition described below applies)

Measurement terminal	CH1: “G16-29” to “G16-9”
Oscilloscope setting	CH1: 2 V/DIV TIME: 4 ms/DIV
Measurement condition	• Ignition knob switch of steering lock unit is pushed • Any one of door is opened • Request switch of each door is pushed

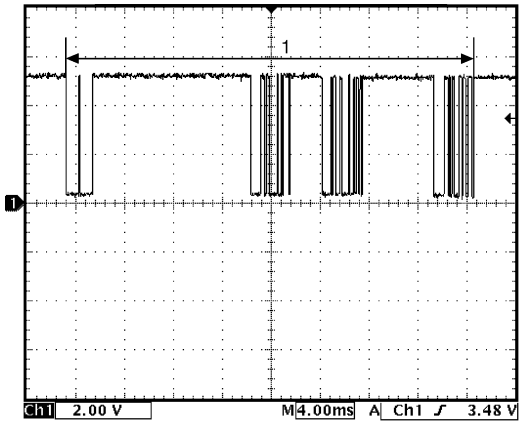

I4RS0BA50019-02

Reference waveform No. 6
Driver and passenger side door lock switch signals.
(This signal indicates door lock status.)
In case the position of driver and passenger side door lock is changed from the unlock to the lock.

Measurement terminal	Driver side door lock switch • CH1: “G16-33” to “G16-9” Passenger side door lock switch • CH2: “G16-37” to “G16-9”
Oscilloscope setting	CH1: 2 V/DIV CH2: 2 V/DIV TIME: 1 s/DIV
Measurement condition	Press lock side of manual door lock switch

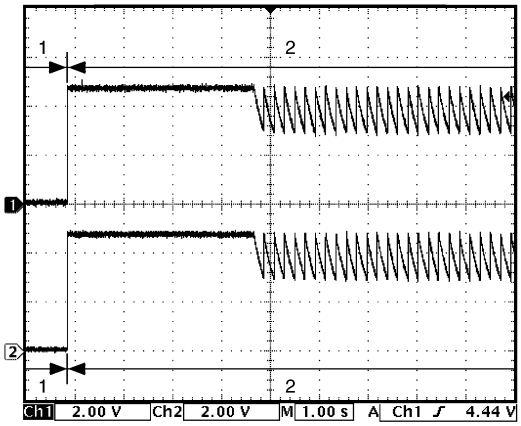

I5JB0AA50027-02

1. Unlock signal	2. Lock signal

In case the position of passenger side door lock is changed from the lock to the unlock when the position of driver and passenger side door is at the lock

Measurement terminal	Driver side door lock switch • CH1: “G16-33” to “G16-9” Passenger side door lock switch • CH2: “G16-37” to “G16-9”
Oscilloscope setting	CH1: 2 V/DIV CH2: 2 V/DIV TIME: 400 ms/DIV
Measurement condition	Driver door is at lock position and passenger side door is at unlock position

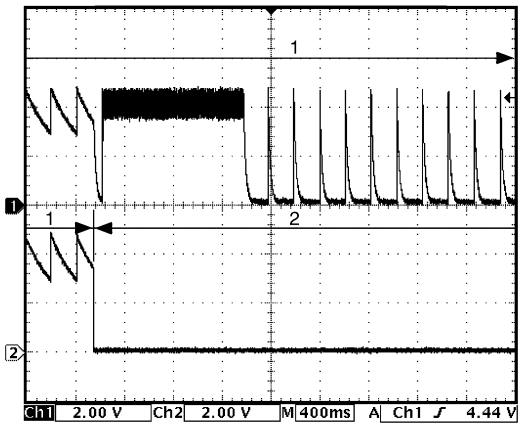

I5JB0AA50028-02

1. Lock signal	2. Unlock signal

In case the position of driver side door lock is changed from the lock to the unlock when the position of driver and passenger side door is at the lock.

Measurement terminal	Driver side door lock switch • CH1: “G16-33” to “G16-9” Passenger side door lock switch • CH2: “G16-37” to “G16-9”
Oscilloscope setting	CH1: 2 V/DIV CH2: 2 V/DIV TIME: 400 ms/DIV
Measurement condition	Driver door is at unlock position and passenger side door is at lock position

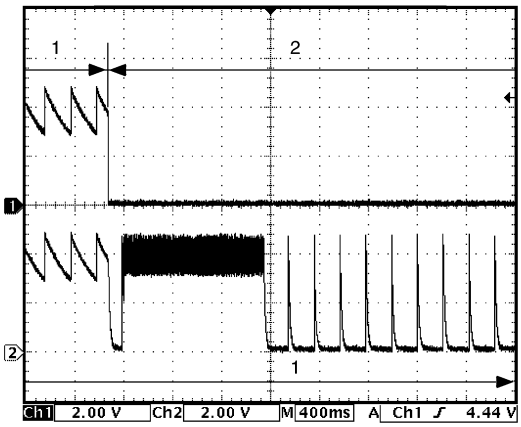

I5JB0AA50029-02

1. Lock signal	2. Unlock signal

In case the position of driver and passenger side door lock is changed from the lock to the unlock.

Measurement terminal	Driver side door lock switch • CH1: “G16-33” to “G16-9” Passenger side door lock switch • CH2: “G16-37” to “G16-9”
Oscilloscope setting	CH1: 2 V/DIV CH2: 2 V/DIV TIME: 400 ms/DIV
Measurement condition	Driver door is at unlock position and passenger side door is at lock position

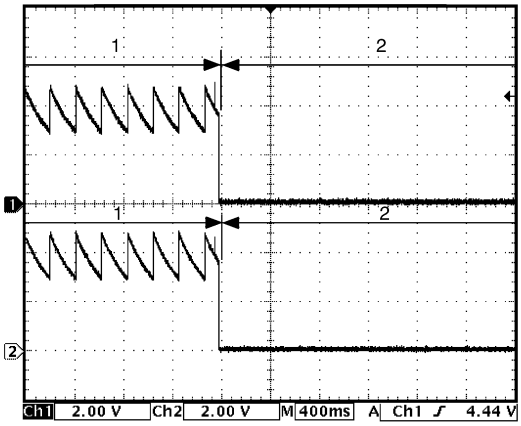

I5JB0AA50030-03

1. Lock signal	2. Unlock signal

No DTC Detection After Performing DTC Check

S7RW0AA504014

Wiring Diagram

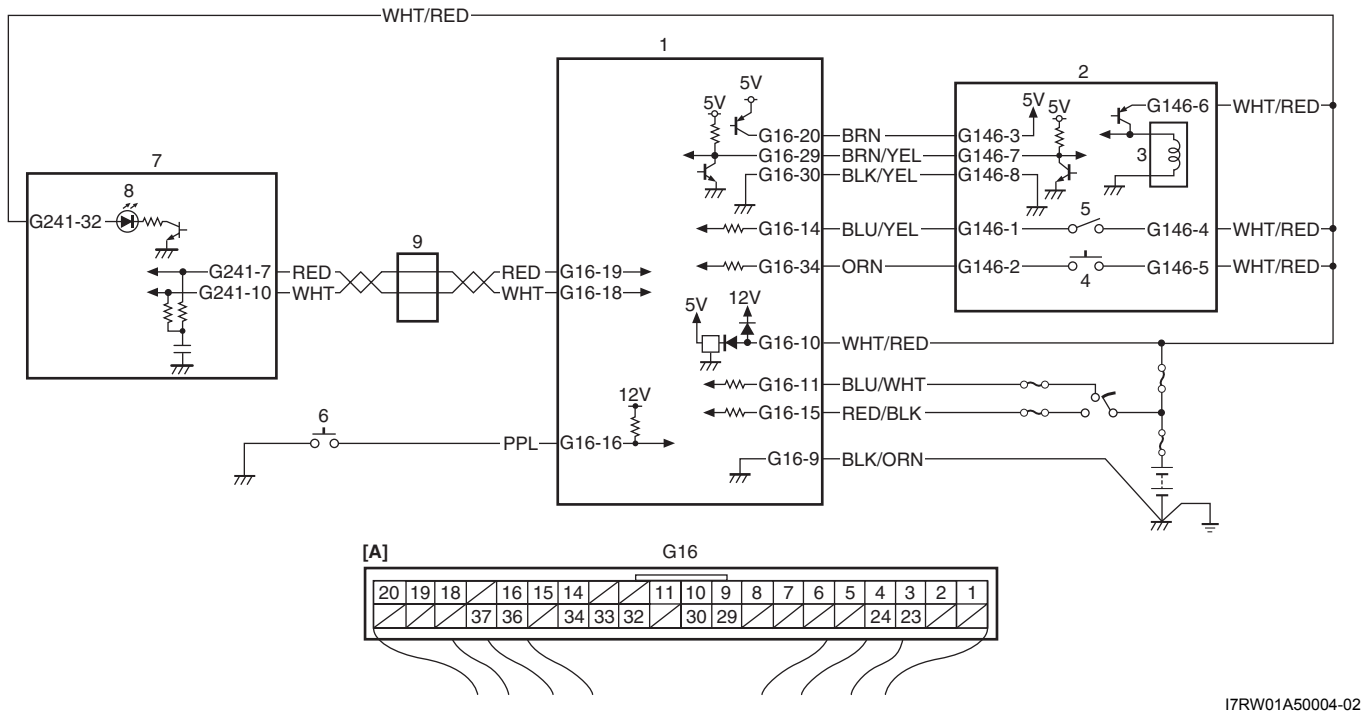

I7RW01A50004-02

[A]: Keyless start control module connector (viewed from harness side)	4. Ignition knob switch	8. Key indicator light
1. Keyless start control module	5. Key reminder switch	9. CAN junction connector
2. Steering lock unit	6. Driver side door request switch	
3. Steering lock solenoid	7. Combination meter	

Description

The keyless start control module detects DTC by using signals from the key reminder and driver side door request switches. The keyless start control module makes the key indicator light in the combination meter flash on and off by using CAN communication.

Troubleshooting

Step	Action	Yes	No
1	**Combination meter power and ground circuit check** 1) Turn ignition switch to ON position. *Do warning lights in combination meter other than key indicator light light up?*	Go to Step 2.	Check main fuse, circuit fuse, combination meter power and ground circuit.
2	**Driver side door request switch and its circuit check** 1) Check driver side door request switch and its circuit referring to “DTC No. 51 / No. 52 / No. 53: Driver Side / Passenger Side / Rear End Door / Trunk Lid Request Switch Failure”. *Is it in good condition?*	Go to Step 3.	Repair or replace malfunction part.
3	**Key reminder switch and its circuit check** 1) Turn ignition switch to OFF position. 2) Disconnect connector from ignition switch. 3) Check key reminder switch for operation referring to “Ignition Switch Inspection in Section 9C”. 4) If OK, check for open, short and high resistance in key reminder switch circuit. *Is it in good condition?*	Go to Step 4.	Repair or replace malfunction part.

Step	Action	Yes	No
4	**Keyless start control module power and ground circuit check** 1) Check keyless start control module power and ground circuit for condition referring to “Keyless Start Control Module Power and Ground Circuit Check”. *Is it in good condition?*	Go to Step 5.	Repair circuit.
5	**CAN communication circuit check** 1) Turn ignition switch to OFF position. 2) Disconnect connectors of all control modules communicating by means of CAN. 3) Check CAN communication circuit between control modules for open, short and high resistance. *Is each CAN communication circuit in good condition?*	Substitute a known-good keyless start control module and recheck.	Repair circuit.

Key Indicator Light Circuit Check (Key Indicator Light Doesn’t Light when Ignition Knob Switch is Pushed)

S7RW0AA504015

Wiring Diagram

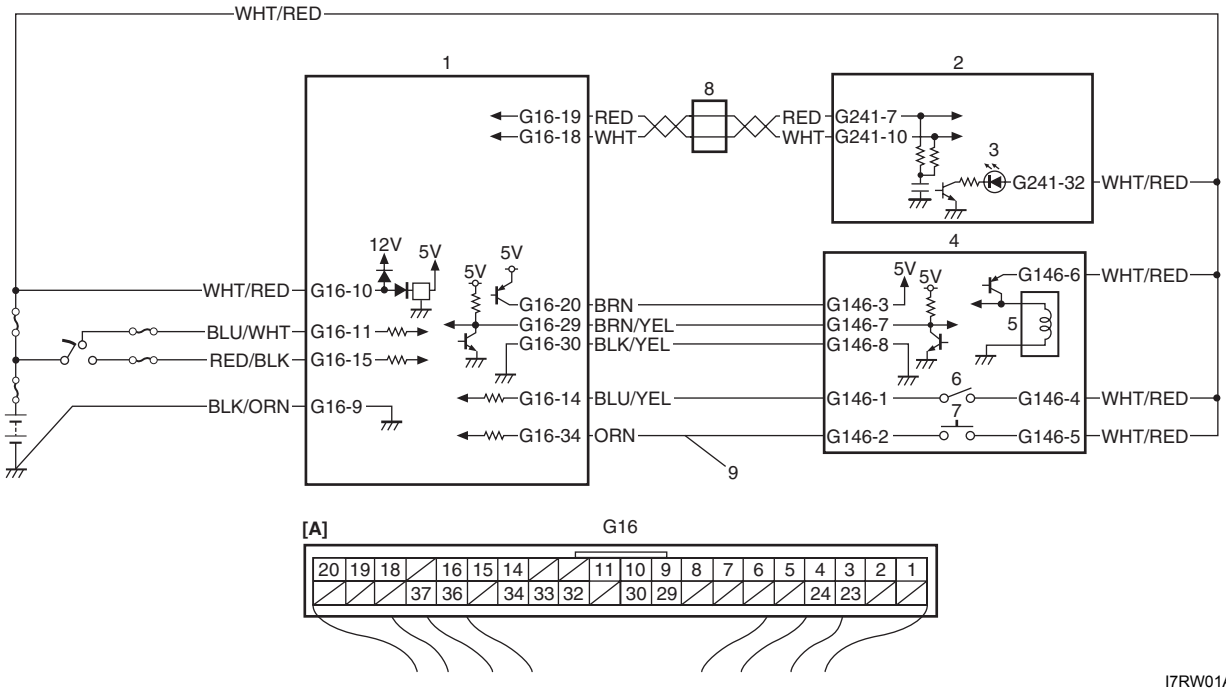

I7RW01A50005-01

[A]: Keyless start control module connector (viewed from harness side)	5. Steering lock solenoid
1. Keyless start control module	6. Key reminder switch
2. Combination meter	7. Ignition knob switch
3. Key indicator light	8. CAN junction connector
4. Steering lock unit	9. Ignition knob switch signal circuit

Description

When the ignition knob switch is pushed, the key indicator light lights up in blue if you carry the remote controller registered in the keyless start control module and it lights in red if you carry the remote controller which has not been registered in the keyless start control module or if you carry no remote controller.

Troubleshooting

Step	Action	Yes	No
1	**Combination meter power and ground circuit check** 1) Turn ignition switch to ON position. *Do warning lights in combination meter other than key indicator light light up?*	Go to Step 2.	Check main fuse, circuit fuse, combination meter power and ground circuit.
2	**Keyless start control module power and ground circuit check** 1) Check keyless start control module power and ground circuit for condition referring to “Keyless Start Control Module Power and Ground Circuit Check”. *Is it in good condition?*	Go to Step 3.	Repair circuit.
3	**Steering lock unit ignition knob switch check** 1) Check ignition knob switch of steering lock unit for operation referring to “Steering Lock Unit Inspection”. *Is it in good condition?*	Go to Step 4.	Replace steering lock unit.
4	**Wire harness check** 1) Turn ignition switch to OFF position. 2) Disconnect connectors from keyless start control module, steering lock unit and combination meter. 3) Check for open, short and high resistance in following circuits. • Ignition knob switch signal circuit • Keyless start control module and combination meter CAN communication circuit *Is each circuit in good condition?*	Go to Step 5.	Repair circuit.
5	**Keyless start system operation check** 1) With remote controller of which ID code is registered in keyless start control module carried with you, try to turn ignition knob switch. *Can it be turned to any position other than “LOCK” position?*	Replace combination meter.	Substitute a known-good keyless start control module and recheck.

Keyless Start Control Module Power and Ground Circuit Check

S7RW0AA504016

Wiring Diagram

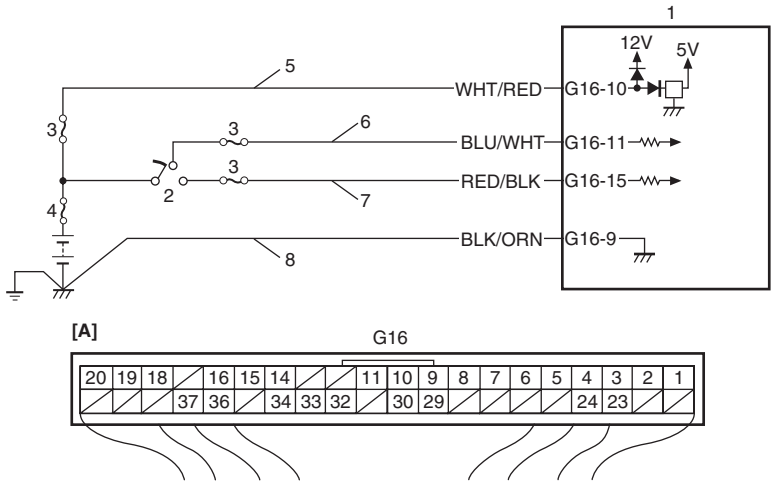

I7RW01A50006-02

[A]: Keyless start control module connector (viewed from harness side)	3. Circuit fuse	6. ACC signal circuit
1. Keyless start control module	4. Main fuse	7. IG ON signal circuit
2. Ignition switch	5. Power source circuit	8. Ground circuit

Troubleshooting

Step	Action	Yes	No
1	**Fuse check** 1) Turn ignition switch to OFF position. 2) Check circuit fuse and main fuse for condition. *Are fuses in good condition?*	Go to Step 2.	Replace fuse(s) and check for short.
2	**Power supply circuit check** 1) Disconnect connector from keyless start control module. 2) Check for proper connection to “Power source”, “ACC signal” and “IG ON signal” terminal of keyless start control module connector. 3) If OK, measure voltage between following terminals. • “Power source” terminal of keyless start control module connector and vehicle body ground with ignition switch is at OFF position • “ACC signal” terminal of keyless start control module connector and vehicle body ground with ignition switch is at ACC position • “IG ON signal” terminal of keyless start control module connector and vehicle body ground with ignition switch is at ON position *Is each terminal voltage is 10 – 14 V?*	Go to Step 3.	Repair defective power supply circuit.
3	**Ground circuit check** 1) Check for proper connection to “Ground” terminal of keyless start control module connector. 2) If OK, measure resistance between “Ground” terminal of keyless start control module connector and vehicle body ground. *Is resistance 1 Ω or less?*	Power and ground circuit is in good condition.	Repair ground circuit.

DTC No. 11: Communication Error with Steering Lock Unit

S7RW0AA504017

Wiring Diagram

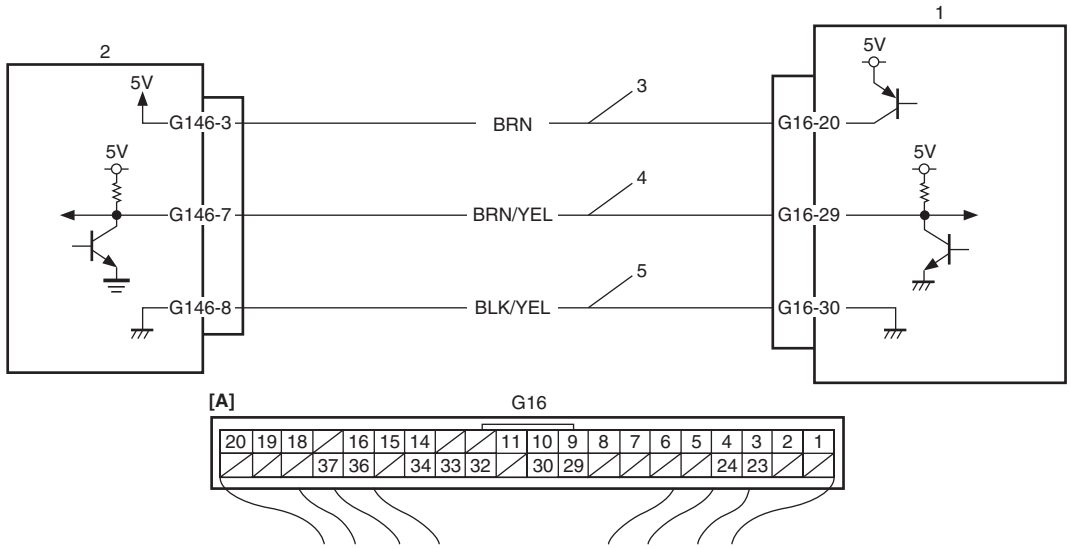

I7RW01A50007-02

[A]: Keyless start control module connector (viewed from harness side)	3. Steering lock unit power supply circuit
1. Keyless start control module	4. Steering lock unit signal circuit
2. Steering lock unit	5. Steering lock unit ground circuit

DTC Detecting Condition and Trouble Area

DTC detecting condition	Trouble area
No communication is available between keyless start control module and steering lock unit.	• Steering lock unit and its circuit • Keyless start control module

DTC Confirmation Procedure

1) Clear DTC referring to “DTC Clearance”.
2) Turn ignition knob switch pushing ignition knob switch.
3) Check DTC referring to “DTC Check”.

DTC Troubleshooting

Step	Action	Yes	No
1	*Was “Keyless Start System Check” performed?*	Go to Step 2.	Go to “Keyless Start System Check”.
2	**Steering lock unit circuit check** 1) Disconnect connector from keyless start control module. 2) Check for proper connection to “Steering lock unit power supply”, “Steering lock unit signal” and “Steering lock unit ground” terminals of keyless start control module connector. 3) If OK, check for open, short and high resistance in following circuits. • Steering lock unit power supply circuit • Steering lock unit signal circuit • Steering lock unit ground circuit *Is each circuit in good condition?*	Go to Step 3.	Repair circuit.

Step	Action	Yes	No
3	**Steering lock unit power supply voltage check** 1) Connect connector to keyless start control module. 2) Measure voltage between “Steering lock unit power supply” terminal of steering lock unit connector and vehicle body ground. *Is voltage 4 – 6 V?*	Replace steering lock unit.	Substitute a known-good keyless start control module and recheck.

DTC No. 13 / No. 14: Release Signal Error from Steering Lock Unit / Steering Lock Unit Malfunction

S7RW0AA504018

DTC Detecting Condition and Trouble Area

DTC detecting condition	Trouble area
DTC No. 13: Although lock release signal is output to steering lock unit, no lock release signal is inputted from steering lock unit. (wire harness is normal) **DTC No. 14:** Although lock release signal is output to steering lock unit, steering lock is not released due to temperature rise of steering lock unit solenoid and no lock release signal is inputted. (wire harness is normal)	• Steering lock unit

DTC Confirmation Procedure

1) Clear DTC referring to “DTC Clearance”.
2) Turn ignition knob switch pushing ignition knob switch.
3) Check DTC referring to “DTC Check”.

DTC Troubleshooting

Replace steering lock unit and recheck.

NOTE

Be sure to register the following code when a used keyless start control module is installed. Otherwise DTC No.13 is detected by keyless start control module though steering lock unit is normal.

- **With immobilizer control system, ignition key transponder code is not registered in ECM.**
- **Without immobilizer control system, steering lock unit ID code is not registered in keyless start control module.**

DTC No. 21 / No. 22: Internal Error of Keyless Start Control Module (EEPROM Reading Error) / (EEPROM Writing Error)

S7RW0AA504019

DTC Detecting Condition and Trouble Area

DTC detecting condition	Trouble area
DTC No. 21: Data cannot be read from memory in keyless start control module. **DTC No. 22:** Data cannot be written into memory in keyless start control module.	• Keyless start control module

DTC Confirmation Procedure

1) Clear DTC referring to “DTC Clearance”.
2) Turn ignition knob switch pushing ignition knob switch.
3) Push request switch of each door.
4) Check DTC referring to “DTC Check”.

DTC Troubleshooting

Substitute a known-good keyless start control module and recheck.

DTC No. 31: Lost Communication with BCM

S7RW0AA504020

Refer to “Troubleshooting for CAN-DTC in Section 1A”.

DTC No. 33: Control Module Communication Bus Off

S7RW0AA504021

Refer to “Troubleshooting for CAN-DTC in Section 1A”.

DTC No. 51 / No. 52 / No. 53: Driver Side / Passenger Side / Rear End Door / Trunk Lid Request Switch Failure

S7RW0AA504022

Wiring Diagram

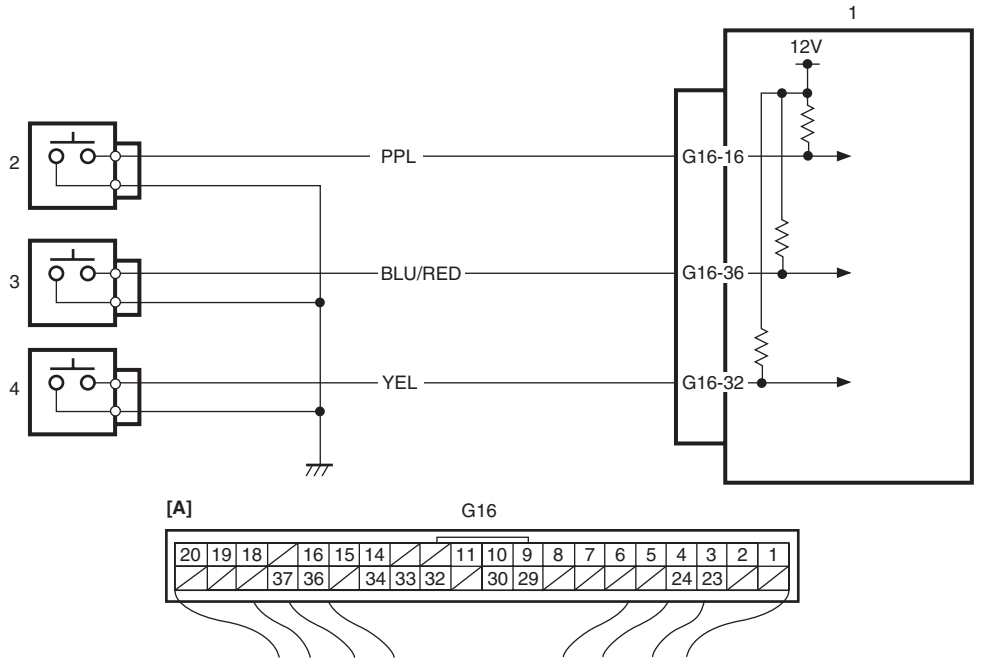

I7RW01A50009-02

[A]: Keyless start control module connector (viewed from harness side)	3. Passenger side door request switch
1. Keyless start control module	4. Rear end door / trunk lid request switch
2. Driver side door request switch	

DTC Detecting Condition and Trouble Area

DTC detecting condition	Trouble area
DTC No. 51: Input signal from driver side door request switch remains ON, unchanged for 10 minutes or longer. **DTC No. 52:** Input signal from passenger side door request switch remains ON, unchanged for 10 minutes or longer. **DTC No. 53:** Input signal from rear end door / trunk lid request switch remains ON, unchanged for 10 minutes or longer.	• Driver side door request switch and its circuit • Passenger side door request switch and its circuit • Rear end door / trunk lid request switch and its circuit • Keyless start control module

DTC Confirmation Procedure

1) Clear DTC referring to “DTC Clearance”.
2) Push request switch of each door.
3) Check DTC referring to “DTC Check”.

DTC Troubleshooting

Step	Action	Yes	No
1	*Was “Keyless Start System Check” performed?*	Go to Step 2.	Go to “Keyless Start System Check”.

Step	Action	Yes	No
2	**Request switch check** 1) Check related door request switch for function referring to “Front Door (Driver and Passenger Side), Rear End Door / Trunk Lid Request Switch Inspection”. *Is each switch in good condition?*	Go to Step 3.	Replace request switch.
3	**Wire harness check** 1) Disconnect connector from keyless start control module. 2) Check for open, short and high resistance in related door request switch circuit. *Is each circuit in good condition?*	Substitute a known-good keyless start control module and recheck.	Repair circuit.

Repair Instructions

Antennas and Request Switches Removal and Installation

S7RW0AA506001

Remove and install antennas and request switches referring to the following figures.

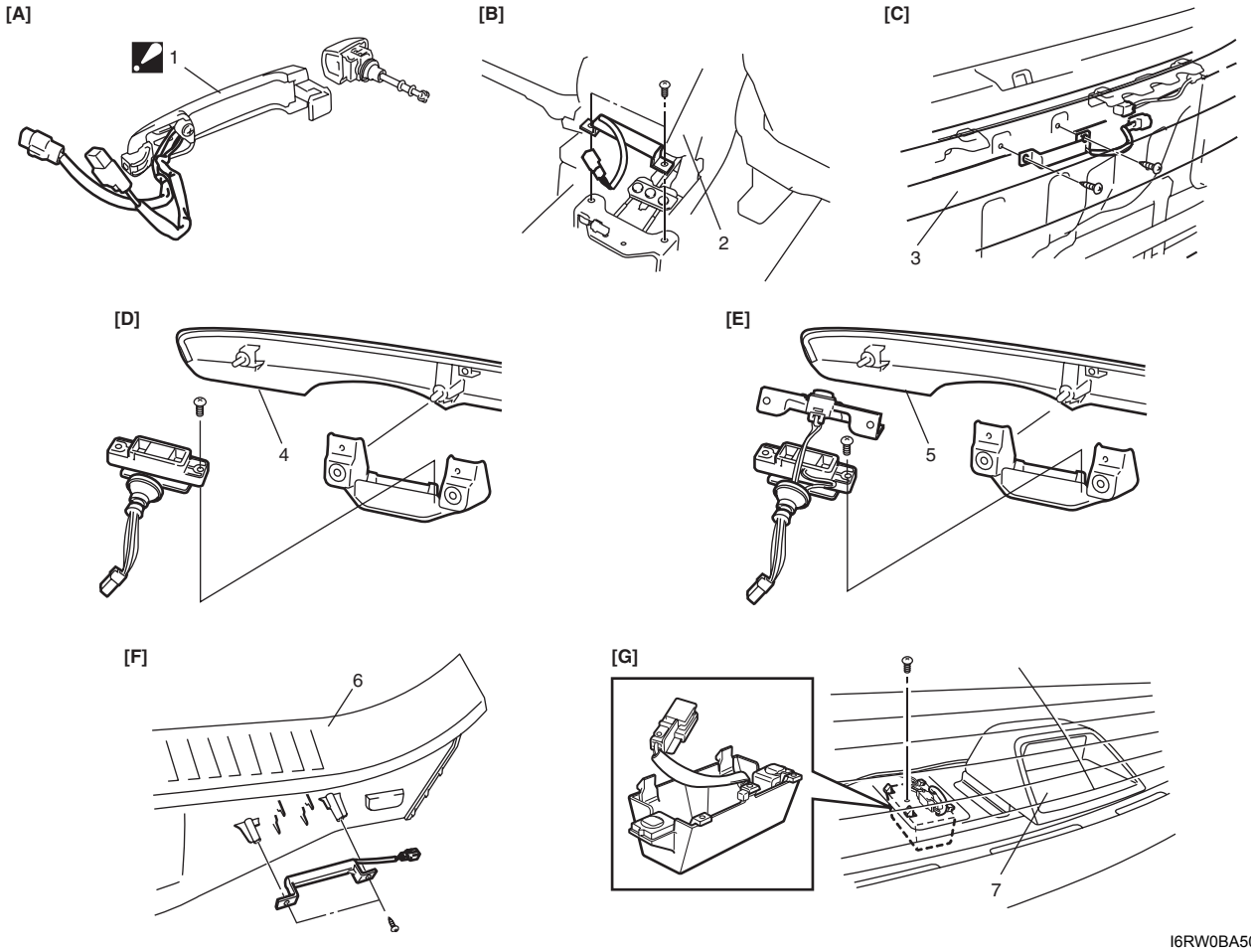

I6RW0BA50011-01

[A]: Front door antenna and request switch (included in outside door handle)	1. Outside handle : Antenna and request switch can not be removed from outside door handle
[B]: Center antenna	2. Parking brake lever
[C]: Rear end door / trunk lid antenna	3. Rear bumper
[D]: Trunk lid request switch (Sedan)	4. Trunk lid license garnish
[E]: Rear end door opener and request switch (Hatchback)	5. Rear end door license garnish
[F]: Luggage room antenna (Hatchback)	6. Tail end member trim
[G]: Trunk room antenna (Sedan)	7. High mount stop lamp

Front Door (Driver and Passenger Side), Rear End Door / Trunk Lid Request Switch Inspection

S7RW0AA506002

1) Remove front door trim, rear end door trim or trunk lid trim.
2) Disconnect request switch connector.
3) Check for continuity between terminals “1” and “2” at each switch position as shown below. If check result is not as specified, replace.

Request switch specification
ON position (request switch pushed): Continuity
OFF position (request switch released): No continuity

[A]

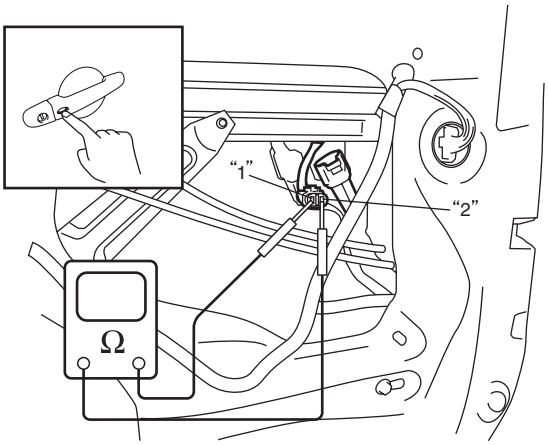

[B]

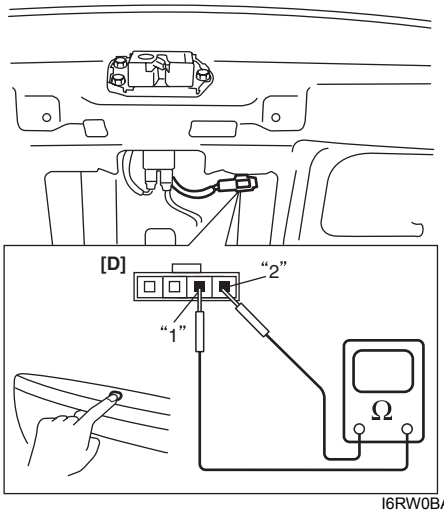

I6RW0BA50012-01

[C]

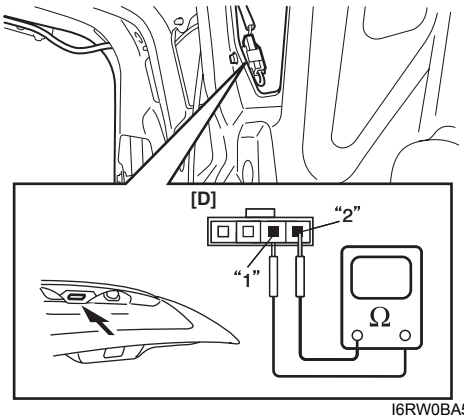

I6RW0BA50013-01

[A]:	Front door request switch (driver and passenger side)
[B]:	Rear end door request switch (Hatchback)
[C]:	Trunk lid request switch (Sedan)
[D]:	Request switch connector (viewed from harness side)

Steering Lock Unit Removal and Installation

S7RW0AA506003

For removal and installation, refer to “Steering Lock Assembly (Ignition Switch) Removal and Installation in Section 6B”.

Steering Lock Unit Inspection

S7RW0AA506004

Check key reminder switch and ignition knob switch in steering lock unit for operation referring to “Ignition Switch Inspection in Section 9C”.

Front Door Lock Switch Inspection

S7RW0AA506005

1) Remove door trim from door panel referring to Step 1) to 3) of “Front Door Glass Removal and Installation in Section 9E”.
2) Check for continuity between terminals “1” and “2” at each switch position as shown below. If check result is not as specified, replace.

Door lock switch specification
LOCK position: No continuity
UNLOCK position: Continuity

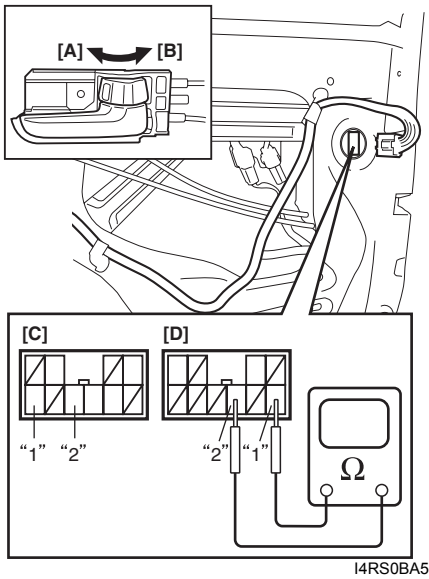

I4RS0BA50029-01

[A]: Lock	[C]: Right side door lock switch
[B]: Unlock	[D]: Left side door lock switch

Keyless Start Control Module Removal and Installation

S7RW0AA506006

Removal

1) Disconnect negative cable at battery.
2) Remove glove box from instrument panel.
3) Disconnect connector from keyless start control module.
4) Remove keyless start control module mounting bolt and then remove keyless start control module (1) from steering support member (2).

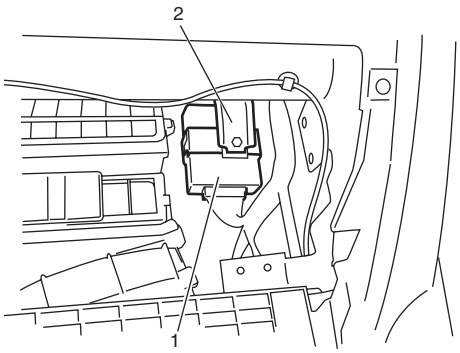

I5RW0AA50016-01

Installation

For installation, reverse removal procedure.
If keyless start control module is replaced, register ID code of remote controller into keyless start control module, referring to “Registration Procedure for Remote Controller ID Code”.

Remote Controller Inspection

S7RW0AA506007

Check that remote controller operation indicator light (3) lights up when lock (1), unlock (2) or panic (4) (if equipped) button of remote controller is pushed.
If it doesn’t light up in this check, replace battery and then recheck. If it doesn’t light up even after battery replacement, replace remote controller.

NOTE

When remote controller transmits lock, unlock or panic signal, it makes operation indicator light light up.

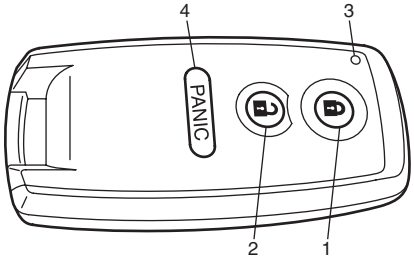

I6JB01A50007-01

Replacement of Remote Controller Battery

S7RW0AA506008

If remote controller operation indicator light fails to light up when lock or unlock button of remote controller is pushed, replace its battery as follows.

1) If ignition key (1) is inserted in remote controller, remove it.
2) With tip of flat blade screwdriver (2) put in slot (3) of remote controller (4), pry it open.

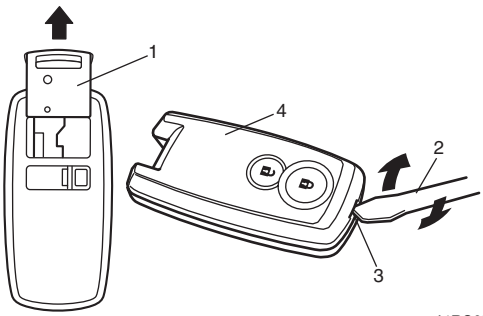

I4RS0BA50032-01

3) Remove battery (4) from lower case (5).

⚠ CAUTION

Use care not to allow grease or dirt to be attached on the printed circuit board and the battery.

4) Replace the battery (lithium disc-type CR 2032 or equivalent battery) so its (+) terminal faces on remote controller lower case.

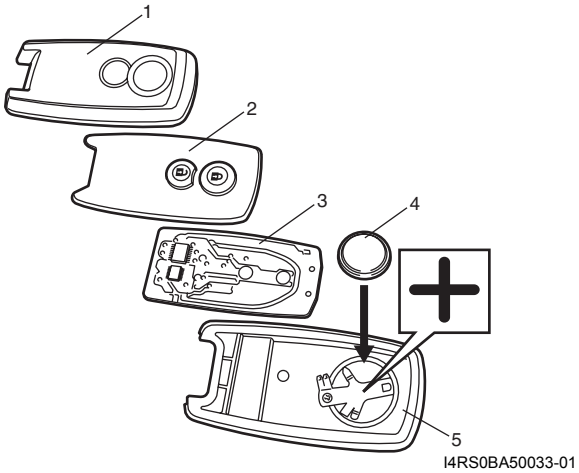

1. Upper case	3. Printed circuit board
2. Rubber switch	

5) Install printed circuit board and rubber switch to upper case and then fit lower case securely.

NOTE

- **To prevent theft, be sure to break the remote controller before discarding it.**
- **Dispose of the used battery properly according to applicable rules or regulations. Do not dispose of lithium batteries with ordinary household trash.**

Registration Procedure for Remote Controller ID Code

S7RW0AA506009

NOTE

- **It is possible to register up to 4 remote controllers in keyless start control module.**
- **Setting keyless start control module to ID code registration mode of remote controller will erase all remote controller ID codes that have been registered in keyless start control module.**
  Therefore, when registering remote controller ID codes in keyless start control module, have all of those to be registered ready and execute their registration at the same time.
- **When registration of more than four remote controller ID codes is attempted, the oldest remote controller ID code will be erased and that inputted after the fourth one will be registered.**
- **When keyless start control module which was used in another vehicle has been installed, register the ID code of the remote controller to the keyless start control module first and then the following code.**
  - **With immobilizer control system, register the ignition key transponder code for the immobilizer control system in ECM. For registration procedure of that, refer to “Registration of the Ignition Key in Section 10C”.**
  - **Without immobilizer control system, register the steering lock unit ID code in keyless start control module. For registration procedure of that, refer to “Keyless Start Registration”.**

If remote controller or keyless start control module is replaced or additional remote controller is necessary, register ID code(s) of remote controller.

1) Sit in driver seat and close all doors.
2) Check that door lock of driver seat is unlocked.
3) Insert ignition key (1) into ignition key cylinder.
4) Perform Steps a) through f) described blow within 25 seconds after Step 3).
   a) First push manual door lock switch (2) toward lock side (3) and then push it toward unlock side (4).
   b) Repeat Step a) 2 more times.
   c) Push lock side of manual door lock switch.
   d) Remove ignition key from ignition key cylinder once and then insert it again.
   e) Repeat Step d) 3 more times.
   f) Start engine and wait for 3 seconds.

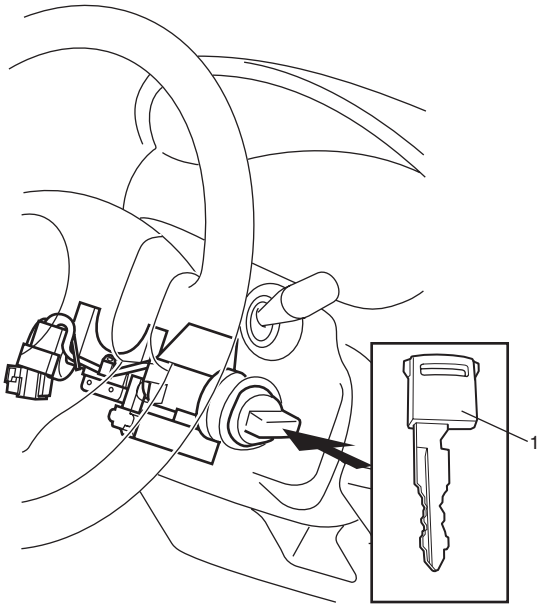

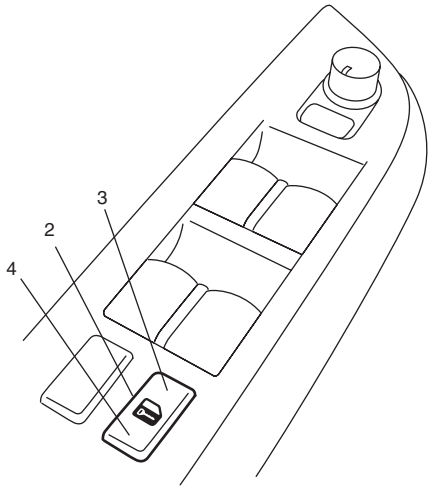

I4RS0BA50034-02

NOTE

When 60 seconds elapse after engine is started, the above process to enter registration mode will be cancelled. Therefore, be sure to proceed to the next step within 60 seconds.

5) Turn ignition switch to OFF position.
   When ignition switch is turned to OFF position, buzzer sounds twice and door lock is activated from lock position to unlock position. This operation indicates that keyless start control module has entered registration mode.
6) Push lock or unlock button of remote controller within 30 seconds after Step 5) to be registered.
   When lock or unlock button of remote controller is pushed, buzzer sounds twice, door lock is activated to lock position and then to unlock position. This operation indicates that remote controller ID code has been registered in keyless start control module. If an additional remote controller needs to be registered, repeat the procedure of Step 6) within 30 seconds after Step 5).
7) To end registration mode, remove ignition key from ignition key cylinder or turn it to ON position.
   In case of vehicle equipped with immobilizer control system, if engine start function of keyless start system does not work after registration, check ECM if DTC P1615 is detected. If it is detected, go to “DTC P1615: Steering Lock Unit Communication Error in Section 10C”. If it is not detected, perform registration procedure again.

Keyless Start Registration

S7RW0AA506010

In case of vehicle not equipped with immobilizer control system, register steering lock unit ID code in keyless start control module when keyless start control module which was used in another vehicle has been installed or steering lock unit was replaced, according to “Keyless start registration” of “Keyless Start System” under “Utility” of “Immobi and/or Keyless System” mode of SUZUKI scan tool (SUZUKI-SDT) referring to “SDT Diagnosis Software Operator’s Manual”.

Prepared by

SUZUKI MOTOR CORPORATION

1st Ed. Jul., 2007

36.5 mm

SUZUKI SX4

SERVICE MANUAL

99500-52L10-01E

SUZUKI

SUZUKI MOTOR CORPORATION

VOL.

1 OF 2

SX4

SERVICE MANUAL

RW415/RW416

VOLUME 1 OF 2

SUZUKI
Caring for Customers

99500-52L10-01E
（英）

30.0 mm

SUZUKI SX4

SUZUKI

SUZUKI MOTOR CORPORATION

VOL.
2 OF 2

SERVICE MANUAL

99500-52L10-01E

SX4

SERVICE MANUAL

RW415/RW416

VOLUME 2 OF 2

SUZUKI
Caring for Customers

99500-52L10-01E
（英）